PHILIPS Service

RECORDERS

N4 307/00/15/17/19

TECHNICAL DATA

Tape speed	: 9 cm/sec ± 2 %
Mains voltages	: 110 - 127 - 220 - 245 V
Power consumption	: approx. 40 W
Output power	: 2 W
Frequency range	: 60 - 14.000 c/s
Max. reel diameter	: 18 cm...7"
Number of tracks	: 4
Weight	: approx. 7 kg
Sensitivity microphone + Radio	: 200 μV - 2 kΩ
gramophone	: 100 mV - 1 MΩ
Premagnetising frequency	: approx. 60 kc/s
Output impedance additional loudspeaker	: 8 Ω and 4 Ω, switcheable
Output voltage line output	: 750 mV...20 kΩ
Loudspeaker	: 4822 240 20035 (8 Ω)
Microphone	: EL 1980 or N8 207
Connection lead for mono recording/playback	: EL 3768/10
Transistors and diodes	: 2 x BC149 or BC109 - preamplifier
	2 x BC148 or BC108 - preamplifier
	1 x AC187/01 - driver transistor
	1 x AC187/AC188 - output transistor pair
	1 x AC125 (HAM1) - detector for modulation indicator
	1 x BC107 - oscillator
	2 x BY126 - mains rectifier

4822 726.1.0365

SERVICE INFORMATION										

CS17514

Printed in Holland

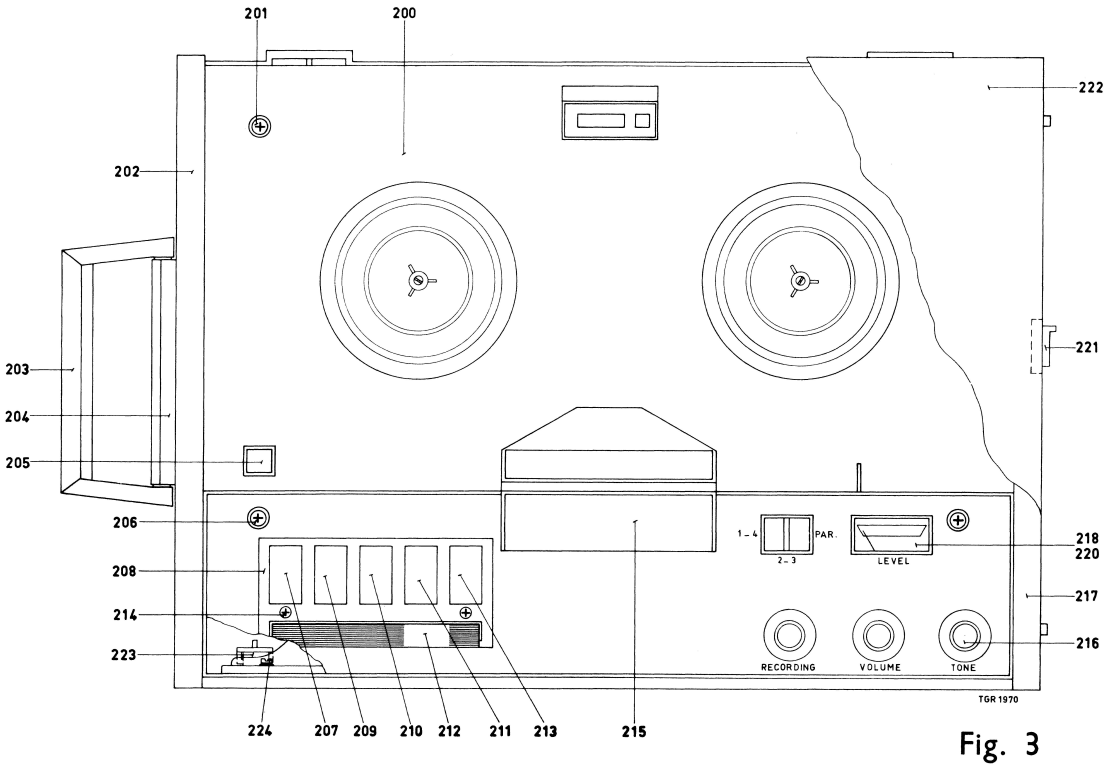

Fig. 3

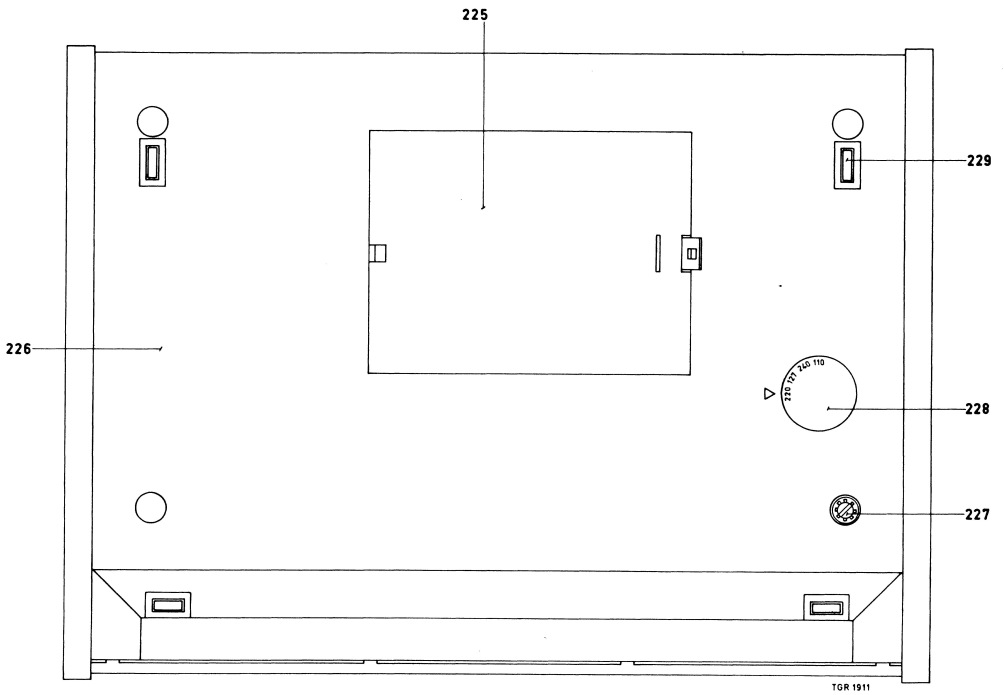

Fig. 4

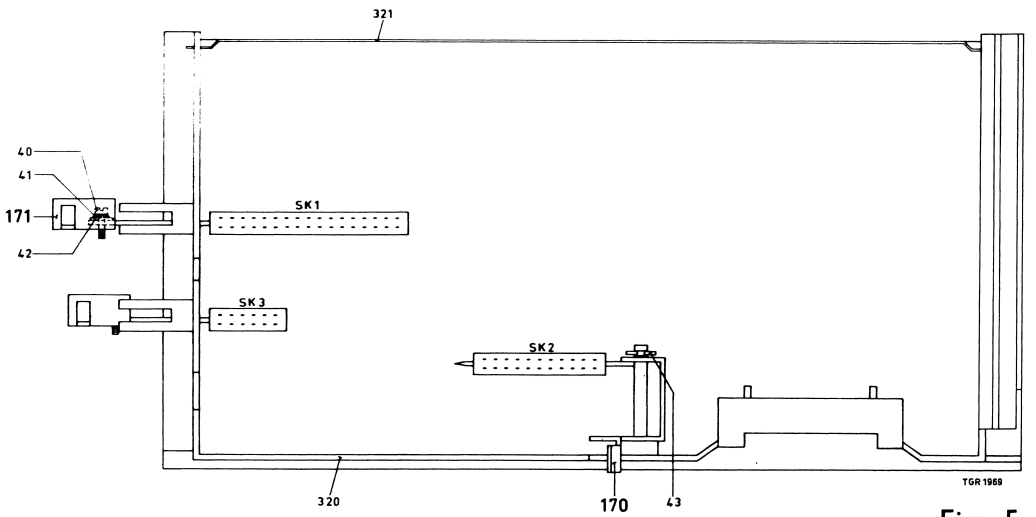

Fig. 5

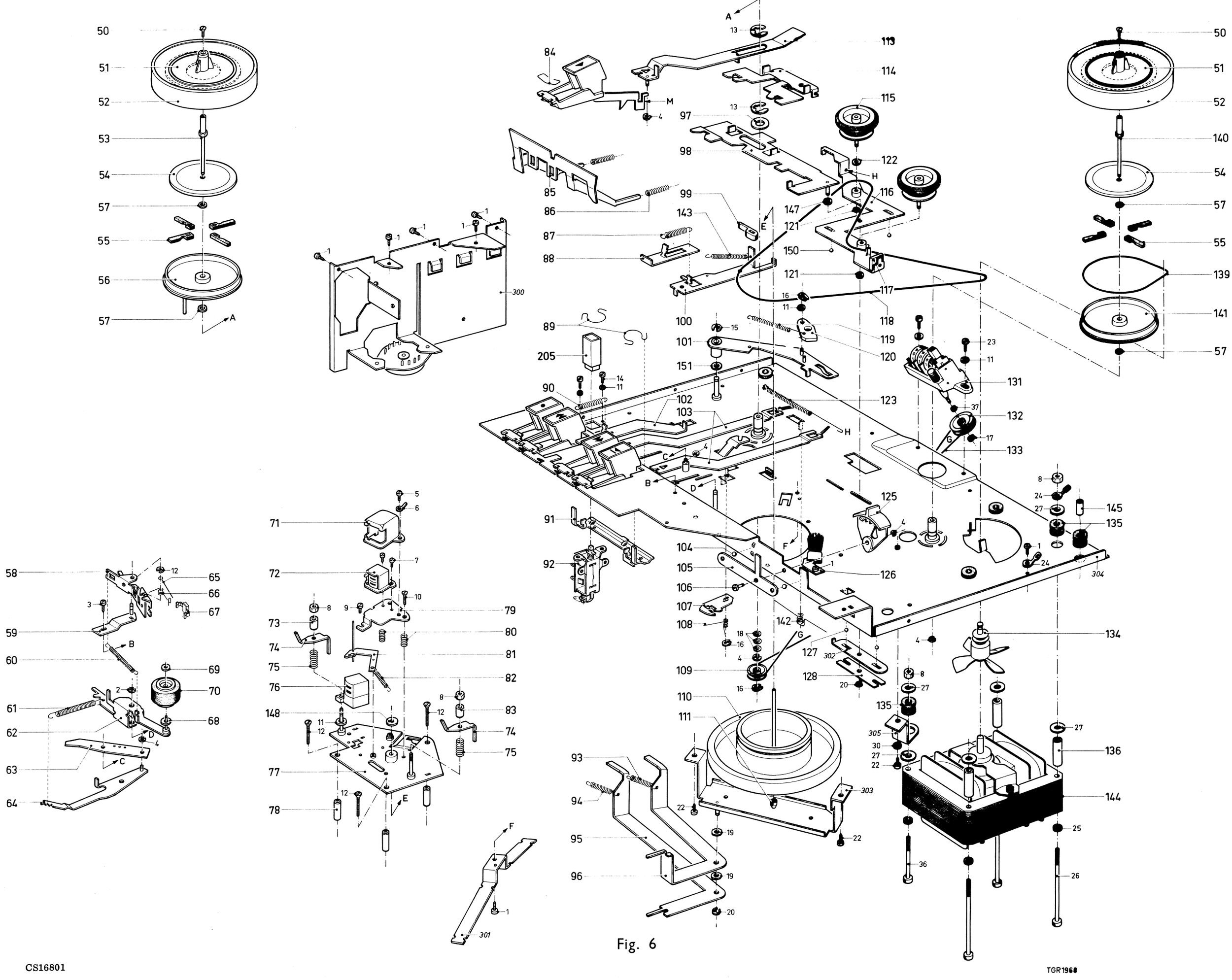

Fig. 6

CS16801

TGR1968

LIST OF ELECTRICAL PARTS

Mains voltage selector		4822 272 10079
Print switch SK1		4822 277 30389
Print switch SK2		4822 277 30388
Print switch SK3		4822 277 30391
Switch SK5		4822 277 20067
Connection plate with BU4 and BU1		4822 267 20098
Potentiometer	R443 - 10 kΩ log.	4822 101 30204
Potentiometer	R445 - 2.2 kΩ log.	4822 101 30202
Potentiometer	R447 - 47 kΩ log.	4822 101 30185
Preset potentiometer	R441 - 22 kΩ	4822 100 10086
Preset potentiometer	R442 - 22 kΩ	4822 100 10086
Preset potentiometer	R446 - 1 kΩ	4822 100 10021
Preset potentiometer	R448 - 100 Ω	4822 100 10073
Transformer	T1	4822 145 30066
Oscillator coil	T3	4822 157 50578
Correction coil	T4	4822 156 10325
Loudspeaker	L.S.	4822 240 20035
Lamp LA (without print)		4822 134 40032
Fuse Z1		4822 252 20001
Modulation meter ME		4822 347 10033
C737-100 μF-16 V		4822 124 20078
C741, C744-220 μF-16 V		4822 124 20082
C760, C769-330 μF-16 V		4822 124 20153
C753, C768, C755-680 μF-40 V		4822 124 20413
C748-33 μF-40 V		4822 124 20087
C727-68 μF-16 V		4822 124 20377
C764-150 μF-6.3 V		4822 124 20387
C734, C740-2.5 μF-64 V C742, C752, C756, C761, C762		4822 124 20095
R576-NTC-47 Ω		4822 116 30077
R577-2.2 Ω-2 W		4822 113 60028
R578 R579 R581 R582	8.2 Ω - 0.6 W	4822 112 10052

ELECTRICAL ADJUSTMENTS AND MEASUREMENTS

All measurements have been carried out at a mains voltage of 220 V ± 1 % - 50 c/s.

Playback amplifier

Setting of the output transistors, see Fig. 21

By means of potentiometer R448 the current through the output transistors should be adjusted to 5 - 7 mA. This can be measured by adjusting the voltage across emitter resistors R582 or R581 to approx. 25 mV.

Measuring the sensitivity, see Fig. 23

Set loudspeaker switch SK5 to 8 Ω and replace the loudspeaker by an 8 Ω - 3 W resistor (code number 4822 112 20052).
Depress playback button (Fig. 1).
Apply a 28 mV - 1000 Hz signal to measuring point MP1 (for tracks 1-4) and MP2 (for tracks 2-3) via a 22 kΩ resistor.
The following sensitivities should then be measured:

A. Loudspeaker output: Turn the volume and the tone control fully clockwise. The voltage across the 8 Ω resistor should then be 470 - 800 mV.

B. Line output: Turn the volume and the tone control fully anti-clockwise. The voltage at the line output, BU1 point 3 or 5 should then be 45 - 80 mV.

Frequency response, see Fig. 23

Measured at the loudspeaker output

Replace the loudspeaker by an 8 Ω resistor.
Turn the volume and the tone control fully clockwise.
Apply a 1000 Hz signal to test points MP1 and MP2 (for tracks 1-4 and 2-3 respectively); this signal should have such an amplitude that the voltage across the 8 Ω resistor is 244 mV.
When the frequency is varied the voltages measured should be as given below.

Measured at the line output

The volume control should be turned fully anti-clockwise when measuring the frequency response at the line output.
Apply a 1000 Hz signal to test points MP1 and MP2 (for tracks 1-4 and 2-3 respectively); the amplitude of the signal should be so that a voltage of 77.5 mV is present at the line output BU1, point 3 or point 5.
When the frequency is varied the following voltages should be measured.

Frequency	Voltage at loudspeaker output	Voltage at line output
125 Hz	975 mV	387 mV
1000 Hz	244 mV	77.5 mV
6300 Hz	153 mV	52 mV
12.500 Hz	136 mV	47 mV

Recording amplifier

Sensitivity of the recording amplifier via BU1 (Fig. 24)

- Depress only the recording button and set the track selector to position 1-4 (2-3).
- Apply a 1000 Hz-85 mV signal to record-player input BU1, point 3 according to Fig. 24.
- Set the radio recording volume control to maximum.
- Set the playback volume control to minimum.
- The voltage at testpoint MP1 (MP2) should be 2.2 - 3.8 mV.

Adjusting the bias current

When adjusting the bias current a compromise should be found between frequency response and distortion. At too small a bias current distortion will arise and at too large a current the treble notes will be attenuated. The bias current causes a voltage drop across resistor R528 or R527 of 10 - 25 mV (target value 18 mV) and should be adjusted so, by means of potentiometers R441 and R442, that just no distortion is audible. Optimum adjustment can be obtained by alternately making a test recording and changing the setting of R441 for tracks 1-4 and that of R442 for tracks 2-3.

Checking indicator ME

. Depress the recording button only.
. Set the track selector to position 1-4 (2-3).
. Apply a 1000 Hz signal to the rec. player input BU1, point 3.
. Set the volume control to maximum.
. Adjust the output voltage so that a voltage of 3 mV is present at test point MP1 (MP2).
. The pointer of the indicator should be set exactly on the separation between red and black by means of potentiometer R446.
. When the input signal is now removed, the meter may have a max. pre-deflection of 1 mm due to the bias current.

Overall frequency response

. Depress the recording button only.
. Via a 22 kΩ resistor apply a 1000 Hz signal to the radio input, BU1 point 1, so that the voltage at test point MP1 (MP2) is 0.3 mV.
  Now keep the input voltage constant.
. Next, record some frequencies at this constant input voltage between:
  60 Hz and 14.000 Hz
  During playback, the output voltages measured at radio output BU1, point 3 or 5 at the various frequencies should not differ more than a factor 2.

Adjusting correction coil T4 (only necessary when the coil is replaced)

. Depress the recording button.
. Apply a 1000 Hz signal to rec. player input BU1 point 3 the amplitude of the signal should be so that a voltage of 0.775 mV is pressed at test point MP1 (for tracks 1-4) and MP2 (for tracks 2-3).
. Set the recorder to position 9,5 cm/sec.
. Adjust the input frequency to 14 kHz.
. The coil should be adjusted so that the output voltage at the test point increases to 3.5 mV.
. Lockpaint the coil with cellulose lacquer.

Transistor voltages and currents

Connect the recorder to a voltage of 220 V ± 1 %, 50 c/s and measure with a multimeter of 20,000 Ω/V.
Switch the recorder to playback.
During the measurements to TS10 the recorder should be set to recording.

TS	Collector	Emitter	Base
2	1 V	-	0.35 V
3	1.7 V	0.2 V	0.7 V
4	6 V	0.7 V	0.8 V
5	9 V	1.4 V	1.8 V
6	11.2 V	1.4 V	1.5 V
7	-	11.3 V	11.2 V
8	21 V	11.4 V	11.6 V
9	-	-	-
10	10 V	0.75 V	-

Capacitor

C737	+10 V
C744	+12 V
C751	+25 V
C755	+21 V
C760	+13 V

Stage sensitivities

Depress the playback or recording button only.

Playback: Apply a 1000 Hz - 30 mV signal to MP1 (for tracks 1-4) and MP2 (for tracks 2-3) via a 22 kΩ resistor. The sensitivities indicated below should then be measured.

Recording: Apply a 1000 Hz - 70 mV signal to radio input BU1, point 1 via a 1 MΩ resistor. The following sensitivities should then be measured.

	Playback		Recording	
	Base	Collector	Base	Collector
TS2	0.03 mV	6.5 mV	0.25 mV	5.5 mV
TS3	2.5 mV	4 mV	5 mV	5 mV
TS4	2.5 mV	22 mV	4.5 mV	150 mV
TS5	22 mV	45 mV	140 mV	1200 mV
TS6	1.5 mV	1000 mV	-	-
TS7	1000 mV	-	-	-
TS8	1000 mV	-	-	-
TS10	-	-	7500 mV	6200 mV
L.S.	630 mV	-	-	-

R	560.534. 567.564.533.554.544.546. 555. 586. 543.572. 541. 545. 531. 568. 583. 581.579. 575. 577. 576.
	566. 562.563. 550.559.529.538.542. 565. 527. 532. 540. 569.570. 585.582.571.
	446.561.549.558. 553.551.557.526. 539. 528. 443. 441. 442. 445. 578. 574.447.
C	766.756. 758. 759. 741. 740. 734.739. 760. 749. 727. 753. 728. 755. 764.
	761. 737. 746. 747. 726. 751. 731. 730. 733. 768. 763. 765.
	754. 757. 742. 748. 750.745. 744. 738. 732. 767. 769. 762.

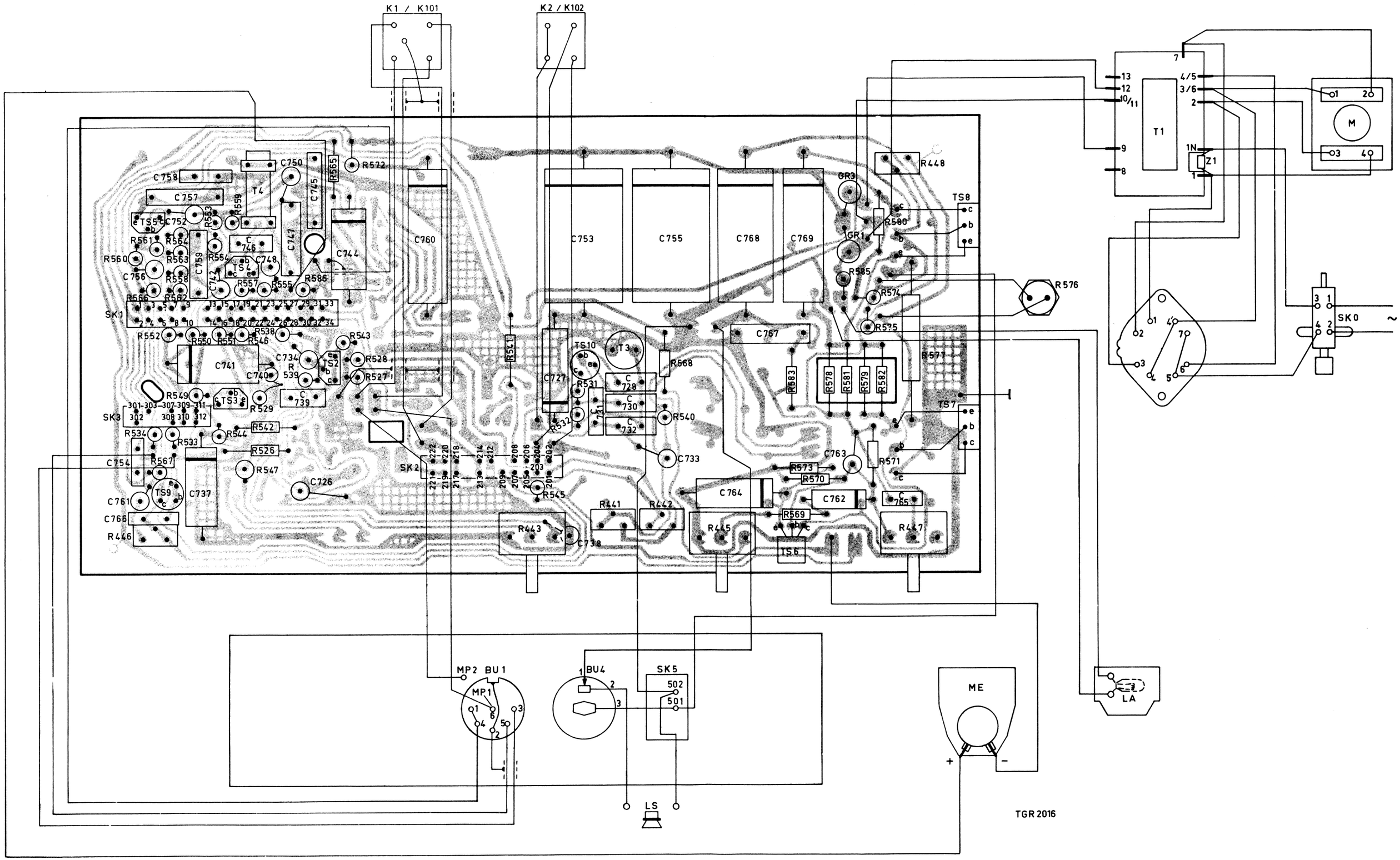

Fig. 21

CS16806

R	528.526. 527. 441. 538. 442.532.542. 565. 546. 544. 552. 558.551. 541.557.555. 554. 561.560.563. 567. 568. 566.569. 448. 570. 580.574.573.581.571. 583. 577.
R	586. 533.534. 531. 539. 443. 547. 529.549. 550. 572.553.559. 562.545.564. 446. 445.585. 576. 575.578.579.582.447. 584.
C	726. 732.734.733.731. 730. 739. 728. 738 727. 737.740.741. 748.744.747.745.760.747.743.750.746. 752.753. 755. 754. 757.758.761.759.766. 762. 764. 763.765. 769.767.768.

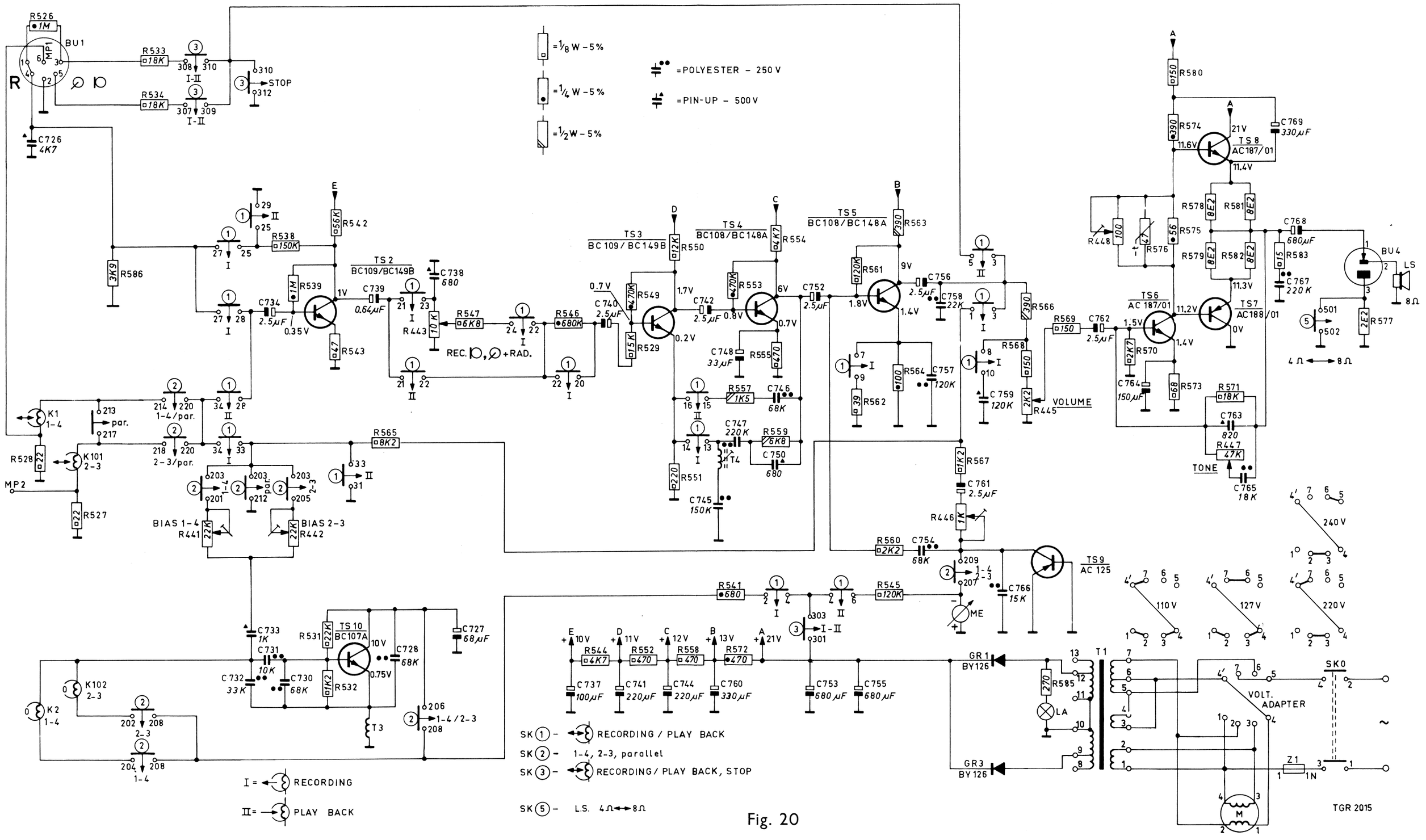

Fig. 20

CS16805

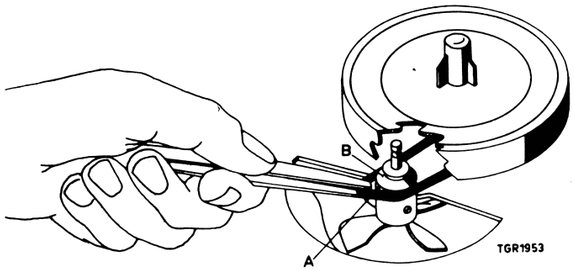

Fig. 7

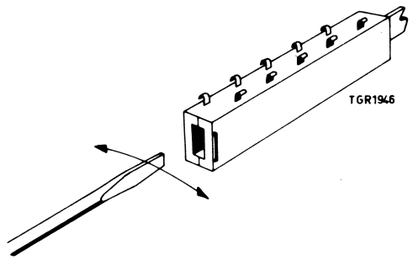

Fig. 8

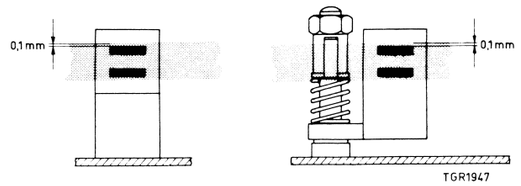

Fig. 9

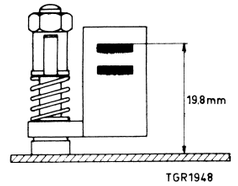

Fig. 10

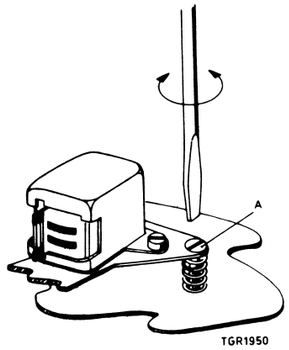

Fig. 11

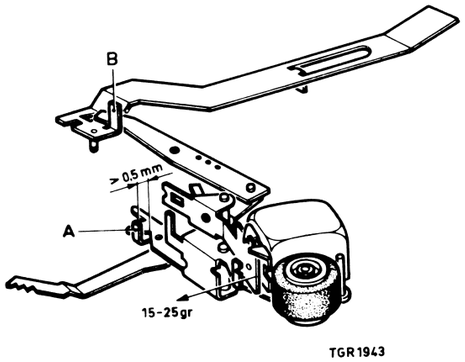

Fig. 13

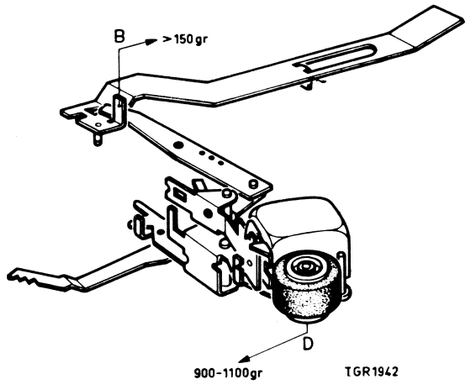

Fig. 14

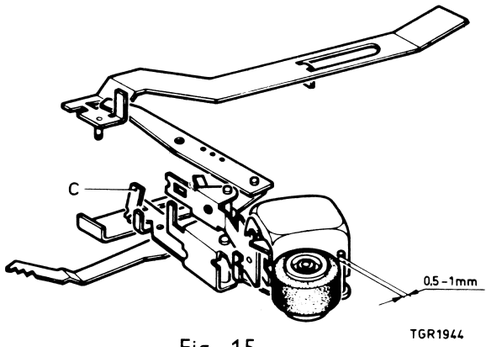

Fig. 15

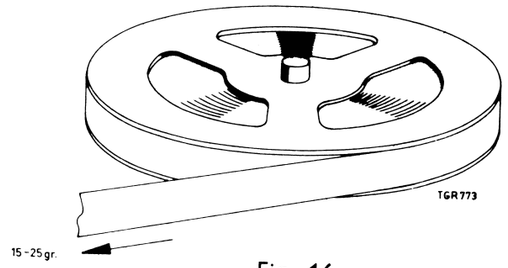

Fig. 16

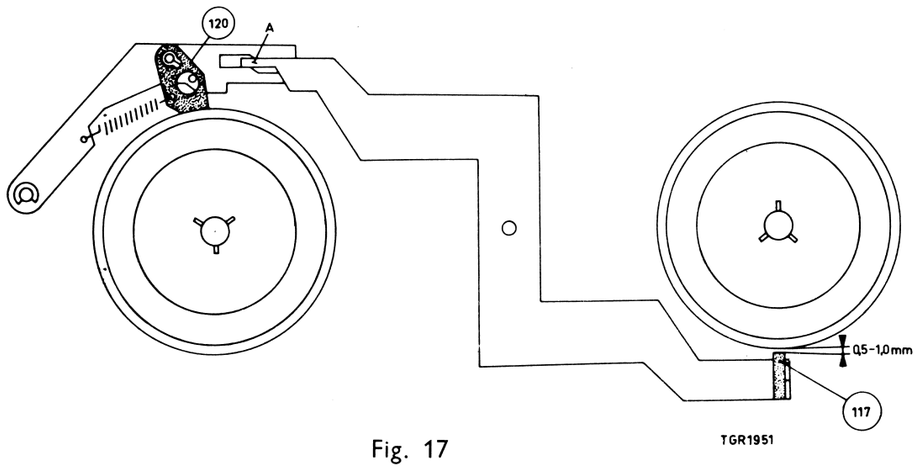

Fig. 17

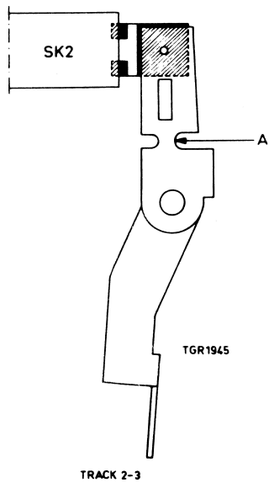

Fig. 18

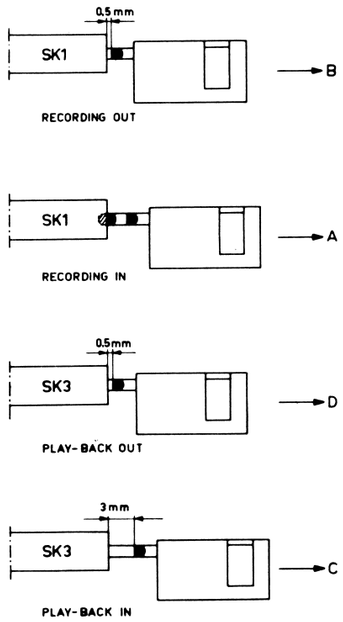

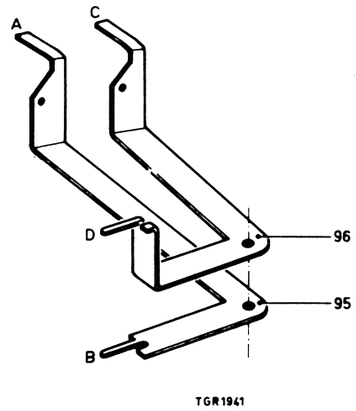

Fig. 19

CS16804

MAINTENANCE (Fig. 6)

After approx. 500 hours of operation it is advisable to clean the recorder, and if necessary, to lubricate it and to replace tape pressure felt item 67.

Clean with methylated spirits or alcohol (Fig. 6)

tape guides	item 73 and item 83
erase head	item 76
rec./playback head	item 72
capstan	item 110
contact surface of pressure roller	item 70
cord	item 118, 139 and item 133
motor pulley	item 134
cord grooves of pulleys	item 115
cord groove of flywheel	item 110
friction discs	item 54, item 56 and item 141
brake blocks	item 99, item 120 and item 117
brake surfaces of turntables	item 52
cord brush	item 126

Lubricate with I-7 (4822 390 10018)

motor bearings	item 144

Lubricate with Shell Tellus 33 (4822 390 10006)

spindles of turntables	item 53 and item 140
spindles of pulleys	item 115
pressure roller spindle	item 62
flywheel shaft	item 110

In the case of replacement the above components should also be lubricated.

Lubricate with lubricant 10 (4822 390 10003)

Contact surfaces of various brackets with respect to each other and with mounting plate.

Lubricate with Shell Alvania 2 (4822 390 20001)

Balls item 150 of brake bracket item 116.

Removing the cabinet (Fig. 3)

. Remove stop button item 212. This can be simply slid up.
. Remove buttons item 216.
. Remove the four screws item 201 and item 206 from the cover plate.
. Disconnect the earthing tag at the top plate and remove the top plate.
. Disconnect the loudspeaker terminals.
. The chassis can then be removed from the cabinet.

Conversion from 50 c/s to 60 c/s (Fig. 7)

. Remove the cabinet.
. Place the drive cord into groove B of the motor pulley item 134 with the aid of pliers or tweezers.

Conversion from 60 c/s to 50 c/s (Fig. 7)

. Replace the 60 c/s motor by a 50 c/s motor, code number 4822 361 70133.
. Remove the cabinet.
. Place the drive cord into cord groove A of motor pulley item 134 with the aid of pliers of tweezers.

REPAIR HINTS

Hinging out the printed circuit board (Fig. 5)

Set the recorder to position "STOP".
Detach the wire form from mounting bracket item 301.
Loosen the 4 screws with which the printed circuit board is secured to the mechanism.
The circuit board can now be hinged out.

For the correct position of the print slide switches, see Figs. 18 and 19.

Replacing turntable, item 52 Fig. 6

. For this the cabinet need not be removed.
. Loosen screw item 50.
. The turntable can now be removed.

Note: The mounted turntable should have an axial play of 0.1 - 0.3 mm.

Replacing the control buttons, Fig. 6

Note: Under the code numbers stated in the list of mechanical parts the control buttons are supplied complete with appertaining brackets.

. Remove bracket item 85 of the stop button by first pressing it back and then lifting it up.
  Ensure that the springs, item 86, which are slid onto the ends of the bracket do not pop away.
. Remove wire spring item 84.
. Straighten the bent tag "M" of the bracket of the button to be replaced or cut it off.
. The button with bracket can now be removed.

Removing the "Pause" button, Fig. 6

. Bend the tags of the bracket on which the button is fitted slightly apart.
. Remove spring item 87.
. When bracket item 100 is pressed back the button with bracket can be removed.

Replacing the erase head, item 76 Fig. 9

For the erase head a different type may be supplied.
In recorders marked WR--- the erase head can be replaced without any further measures.
In recorders marked AH--- the screw at the left of the erase head should be loosened, after which the head can be removed.
The new erase head should be fitted underneath the lefthand tape guide. The correct height of the erase head can be adjusted by inserting shims, code number 4822 532 30095 underneath the head around the tape guide, see Fig. 9.
For the correct adjustment of the erase head see "Mechanical adjustments".

Replacing the recording/playback head, Fig. 6

Loosen the screw, item 5, of the head screening.
Also loosen screws item 7 of the head mounting plate.
The head can be removed after unsoldering the head connections.

Replacing the print switches, Fig. 8

. Prize the switch open with a screwdriver.
. Unsolder the contact springs from the old switch.
. Fit the new switch.

Replacing the flywheel, Fig. 6

. Loosen the screws item 22.
. Remove bracket 303 with the command brackets from the print switches, item 95 and item 96.
. Detach wire support item 301.
. The flywheel can now be removed.

Replacing cord item 139 of the righthand turntable, Fig. 6

. Loosen screw item 50
. Remove the turntable
. The cord can now be removed

Removing plug plates, Fig. 6

. The connection plate can be easily removed by pressing it outwards. For this the spring-loaded tags of the connection plate should be depressed.

Note: It is also possible to replace one or more connection tags of the plug:
. Cut off the old tag at the rear close to the plug and remove the tag via the front.
. Insert the new tag from the outside.
. The tag can now be pulled in completely with the aid of pliers. It should then be turned a quarter turn.

There are 3 different connection tags:
A code number 4822 268 20032
B code number 4822 268 20034
C code number 4822 268 20033

Tag A is used at points 1, 2, 3, 4, 5 and 6 of BU1 and point 3 of BU4. It is also used for test point MP2.
Tags B+C are used for the switch on the plug connection.
It is also used for points 1 and 2 of BU4.
It is recommended to replace tags B + C simultaneously.

MECHANICAL ADJUSTMENTS

Tape path adjustments

Adjusting erase head, Fig. 10

In recorders marked AH.... the erase head is fixed and need not be adjusted. In recorders marked WR.... and in recorders with a replacement head, the height of the head can be adjusted. The clearance between the head mounting plate, item 77, and the top edge of the upper head core should be 19,8 mm. This can be adjusted by inserting shims underneath the tape guides to which the erase head is secured in these recorder. The code number of the shims is 4822 532 30095.

Adjusting tape guides, Figs. 9 and 6

The lefthand tape guide should be adjusted so that the upper core of the erase head protrudes 0.1 mm above the tape. Fig. 9.
The righthand tape guide should be adjusted so that the tape runs freely from the reel on the righthand turntable in the playback and the winding position and no loops are formed between the capstan and the tape guide.

Height adjustment of the recording/playback head, Fig. 6

. Insert a tape in the recorder
. Set the recorder to playback
. With the aid of screws item 9 and item 10 adjust the head so that the tape shows no backlash at the tape guide of the recording/playback head.

Adjusting the air gap of the rec./playback head, Figs. 6 and 11

. Insert a 10.000 Hz test tape (code number 4822 397 30004) in the recorder.
. Set the recorder to playback.
. Connect a valve voltmeter to the line output, points 5 or 3 of BU1.
. Adjust for max. output voltage with screw A.
. After the adjustment lockpaint screw A with cellulose lacquer.

Adjusting the pressure roller unit, Figs. 13, 14 and 15

In position playback the pressure roller lever item 62 should be at least 0.5 mm clear of its stop point A.
This can be adjusted by bending tag B of bracket item 64, see Fig. 13.
In this position screening bracket item 58 of the rec./playback head should press against screening item 71 of the head with a force of min. 20 g, see Fig. 13. If necessary, replace spring item 60.
In position playback the pressure roller force should be 900 to 1100 g, measured at point D of bracket item 62, see Fig. 14.
If necessary, replace spring item 61.
The residual force of the pressure roller bracket when switching over from position playback to position stop, should be min. 150 g measured at point B of playback bracket item 113, see Fig. 14.

In position "Pause" the pressure roller should be 0.5 - 1 mm clear of the capstan and run in parallel with the latter.
This can be adjusted by bending tag C on bracket item 88, see Fig. 15.

Adjusting winding rollers item 115, Fig. 6

In the wind or rewind position the winding rollers should be positioned 0.1 - 0.5 mm above the lower edge of the turntables. If required, insert shims underneath winding roller item 122, Fig. 6.

Checking the winding process, Fig. 16

The winding time of 360 m of LP tape should be $\leq$ 180 secs.
The counter friction should be 15 to 25 g at the reel which is being unwound.
The winding friction should be 15 to 25 g.
Both friction forces depend on the reel diameter.

Adjusting the brakes Fig. 17

. Set the recorder to the stop position.
. Press the brake shoe, item 120, to the left as shown in Fig. 17.
. Bend tag A so that in this position of the brake shoe, item 120 the clearance between the righthand turntable and brake shoe item is 0.5 - 1 mm.

Adjusting the print switches, Fig. 18 and Fig. 19.

. Tilt the recorder on its front side.
Ensure that the print cannot be damaged.

Adjusting the track selector, Figs. 18 and 5

. Bend the switch bracket item 170 so that the slide of the print switch in position 2-3 of the track selector knob is positioned as shown in Fig. 18.

Adjusting the recording switch, Figs. 19 and 5.

. Set the recorder to position recording.
. Bend the tags of switch bracket item 95 so that the slide of the print switch is in the positions shown in Fig. 19.

Adjusting the playback switch, Figs. 19 and 5

. Set the recorder to the stop position
. The slide of the print switch should now be in the positions as shown in Fig. 19.
This can be adjusted by bending the tags on switch bracket, item 96.

LIST OF MECHANICAL PARTS

Item	Code number	Description
1	4822 502 30042	Self tapping screw 5Nx5/16"
2	4822 530 70043	Circlip 2.3 Ø
3	4822 502 10673	Screw 3x6
4	4822 532 70123	Circlip 3.2 Ø
5	4822 502 10034	Screw 2.6x5
6	4822 290 30058	Soldering tag
7	4822 502 10679	Screw 2x5
8	4822 505 10326	Nut M4
9	4822 502 10034	Screw 2.6x5
10	4822 502 10093	Screw 2.6x20
11	4822 532 30095	Ring 4 Ø
12	4822 502 10674	Screw 4x20
13	4822 530 70126	Circlip 6 Ø
14	4822 502 10034	Screw 2.6x5
15	4822 530 70124	Circlip 4 Ø
16	4822 530 70115	Circlip 3 Ø
18	4822 532 50689	Ring 3.2 Ø
19	4822 532 10333	Ring 4 Ø
20	4822 530 70123	Circlip 3.2 Ø
22	4822 502 30006	Screw 4x5
23	4822 502 10689	Screw 3x8
24	4822 290 30061	Soldering tag
25	4822 530 80088	Ring 4.1 Ø
26	4822 502 10056	Screw 4x65
27	4822 532 10333	Ring 4 Ø
30	4822 530 80006	Ring 4 Ø
36	4822 502 10696	Screw 4x40
37	4822 532 10333	Circlip 4.3 Ø
40	4822 502 10026	Screw 2x5
41	4822 530 80006	Ring 4 Ø
42	4822 532 10333	Ring 4.3 Ø
43	4822 530 70043	Circlip 2.3 Ø
50	4822 502 10865	Screw M3x5
51	4822 532 50691	Friction ring felt
52	4822 528 10183	Turntable
53	4822 535 80394	Shaft of left-hand turntable
54	4822 528 20125	Friction disc
55	4822 466 40025	Brake shoe
56	4822 691 20012	Friction disc left-hand
57	4822 532 50689	Ring 3.2 Ø
58	4822 403 50474	Bracket complete
59	4822 403 50481	Bracket
60	4822 492 30631	Tension spring
61	4822 492 30628	Tension spring
62	4822 403 40034	Pressure roller lever complete
63	4822 403 50468	Bracket
64	4822 403 50469	Bracket
65	4822 535 90572	Wire spring
66	4822 492 61289	Torsion spring
67	4822 403 50473	Pressure felt
68	4822 310 40003	Ring 4.2 Ø
69	4822 532 50266	Ring 2.5 Ø
70	4822 528 70034	Pressure roller
71	4822 462 50121	Screening cover
72	4822 249 10047	Recording playback head
73	4822 532 20251	Tape guide, left
74	4822 403 50147	Bracket
75	4822 492 60352	Pressure spring
76	4822 249 40033	Erase head
77	4822 403 50471	Head plate with flywheel bearing
78	4822 532 20427	Spacer 4.1x5x14 mm
79	4822 403 50489	Head mounting plate
80	4822 492 50684	Pressure spring
81	4822 403 50472	Bracket
82	4822 492 30629	Tension spring
83	4822 532 20243	Tape guide, right
84	4822 492 61291	Wire spring
85	4822 403 50482	Bracket
86	4822 492 50655	Pressure spring
87	4822 492 30634	Tension spring
88	4822 403 50478	Bracket
89	4822 492 60362	Wire spring
90	4822 492 30259	Tension spring
91	4822 403 30136	Bracket
92	4822 276 10287	Mains switch, complete
93	4822 492 20633	Tension spring
94	4822 492 30632	Tension spring
95	4822 403 50477	Bracket
96	4822 403 50475	Bracket
97	4822 532 10272	Ring 7.5 Ø
98	4822 403 50151	Bracket
99	4822 466 40023	Brake shoe
100	4822 403 50479	Bracket
101	4822 403 10096	Brake bracket
102	4822 403 50476	Bracket
103	4822 403 50466	Bracket
104	4822 520 40017	Ball 3/16"
105	4822 492 61292	Leaf spring
106	4822 535 90552	Pin
107	4822 403 30135	Bracket
108	4822 492 40301	Torsion spring
109	4822 528 80107	Pulley
110	4822 528 60051	Flywheel
111	4822 462 70354	Thrust bearing
113	4822 403 50467	Bracket
114	4822 403 50129	Bracket
115	4822 528 80146	Pulley
116	4822 403 50437	"Z" bracket
117	4822 466 40069	Brake shoe
118	4822 358 30014	Cord
119	4822 492 30416	Tension spring
120	4822 466 40071	Brake shoe
121	4822 532 50268	Ring 1.5 Ø
122	4822 532 50692	Ring 2.2 Ø
123	4822 492 30263	Tension spring
125	4822 411 50152	Track selector knob
126	4822 479 30027	Cord brush
127	4822 520 40005	Ball
128	4822 492 60356	Leaf spring
131	4822 349 50028	Counter
132	4822 528 80106	Pulley
133	4822 358 30023	Counter cord
134	4822 528 50028	Motor pulley 50 - 60 Hz
135	4822 325 80066	Grommet
136	4822 532 20429	Spacer
139	4822 358 30095	Cord
140	4822 535 80393	Shaft of turntable, right-hand
141	4822 691 20014	Friction disc, right-hand
142	4822 492 40119	Torsion spring
143	4822 492 30267	Tension spring
144 }	4822 361 70133	Motor 50 Hz + pulley 50 - 60 Hz
144 }	4822 361 70135	Motor 60 Hz
145	4822 532 20428	Spacer
147	4822 532 50286	Ring 4.1 Ø
148	4822 532 50006	Ring
150	4822 520 40005	Ball
151	4822 532 50301	Ring 5.2 Ø
170	4822 403 10097	Bracket
171	4822 403 50483	Bracket

LIST OF MECHANICAL PARTS OF THE CASE

200	4822 443 30153	Top plate complete
201	4822 502 10863	Ornamental screw 4x25
202	4822 443 50137	Side panel, left, wood
203	4822 498 30047	Handle
	4822 492 61325	Leaf spring of handle
204	4822 403 50465	Bracket of handle
205	4822 410 20749	Knob of on-off switch
206	4822 502 10864	Ornamental screw 4x35
207	4822 410 20755	Recording button, complete with bracket
208	4822 459 20117	Ornamental frame
209	4822 410 20752	Fast rewind button, complete with bracket
210	4822 410 20754	Playback button, complete with bracket
211	4822 410 20751	Fast wind button, complete with bracket
212	4822 410 20748	STOP button
213	4822 410 20753	PAUSE button, complete with bracket
214 }	4822 502 10862	Screw 2.6x6
214 }	4822 505 10324	Nut M2.6
215	4822 443 60267	Head cover
216	4822 413 40392	Knob
	4822 532 10284	Circlip of knob, item 216
217	4822 443 50136	Side panel, right, wood
218	4822 347 10033	Indication meter
220	4822 691 30028	Print, complete with lamp
221	4822 444 60147	Lock, complete
222	4822 443 20045	Lid, complete
223	4822 492 61288	Leaf spring of speaker mounting
224	4822 502 10558	Screw 3x5
225	4822 443 60266	Lid of lead stowage compartment
226	4822 443 50135	Lower case section, complete
227 }	4822 502 10046	Screw 4x6
227 }	4822 532 10333	Ring 4.3 Ø
228	4822 272 10079	Voltage adapter
229	4822 462 40014	Foot

REPAIR HINTS

Symptom	Cause	Remedy
1. Recorder does not function at all	1. a. Fuse in mains transformer blown b. Mains lead/plug interrupted c. Mains switch defective	1. a. Trace fault and replace fuse b. Check with ohmmeter c. Replace mains switch
2. Mechanical section does not function	2. a. Cord or cords run off b. Motor defective	2. a. Refit or replace cord(s) b. Check motor bearings or replace motor
3. Fast winding impossible	3. Winding idler slips on right-hand turntable	3. Degrease with methylated spirits or alcohol or replace idler
4. Fast rewinding impossible	4. Rewinding idler slips	4. Degrease with methylated spirits or alcohol.
5. Brakes do not work or only poorly so	5. a. Brake shoe greasy or worn b. Brake adjustment no longer correct	5. a. Degrease with methylated spirits or replace. b. Readjust
6. Recorder does not record	6. a. Defect in amplifier b. Rec./playback head with shorted winding c. Premagnetising current too large	6. a. Locate and repair fault b. Replace head c. Readjust premagnetising current
7. Recorder does not play back	7. Fault in amplifier	7. Locate and repair fault.
8. Wow	8. a. Drive cords greasy b. Irregular winding friction of righthand turntable c. Pressure roller runs heavily d. Capstan bent e. Counter has too much friction	8. a. Clean with methylated spirits or replace b. Clean friction or, if necessary, replace felt ring c. Replace pressure roller and spindle d. Replace flywheel e. Clean or replace counter
9. Tape forms loops after switching to playback	9. Winding friction of righthand turntable defective	9. a. Clean friction b. Clean or replace cord c. Replace felt friction ring
10. Recorder produces noise during playback	10. a. Fault in amplifier b. Rec./playback head magnetised	10. a. Locate and repair fault b. Switch the recorder a few times on and off in position "recording"
11. Distortion during recording	11. a. Tape not pressed properly against record/playback head b. Premagnetising current too small c. Fault in amplifier	11. a. Check relevant pressure felt b. Readjust premagnetising current c. Locate and repair fault
12. Tape is not wound taut enough during fast rewinding	12. Friction of righthand turntable too small	12. a. Check cord for elongation (replace, if necessary) b. Clean friction. If necessary, replace brake blocks of friction
13. The tape is not wound sufficiently taut during fast forward winding	13. Friction of lefthand turntable too small	13. a. Check cord for elongation (replace if necessary). b. Clean friction, If necessary replace brake blocks of friction
14. Irregular playback	14. a. Pressure felt of rec./playback head worn b. Tape dirty c. Slit in tape guide of rec./playback head d. Rec./playb. head dirty	14. a. Replace pressure felt and check pressure. b. Replace or clean tape with piece of felt c. Replace head and adjust properly d. Clean head with methylated spirits or alcohol
15. Hum during playback	15. Mu-metal screening bracket not properly positioned against rec./playback head	15. Bend bracket
16. Tape erased poorly or not at all.	16. a. Erase head dirty b. Erase head defective c. Fault in amplifier	16. a. Clean head with methylated spirits or alcohol b. Replace erase head c. Check oscillator