RECORDERS N 2202

00/15/22/42

SERVICE MANUAL

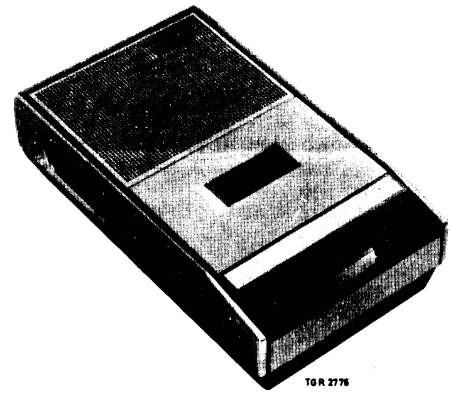

TECHNICAL DATA

Tape speed	: 4.75 cm (1 7/8"/sec.)
Supply voltage	: 7,5 V (5x1.5 V)
Output power	: 400 mW (d=10 %)
Loudspeaker	: 4822 240 30033 - 8 Ω
Remote-controlled microphone	: N8209
Dimensions	: 203x118x55 mm
Weight	: 1.1 kg
Input sensitivity	: 0.2 mV across 2 kΩ
Maximum current at no load	: approx. 110 mA
Maximum current at 400 mW	: approx. 200 mA
Frequency range	: 80-10.000 Hz within 6 dB
Track width	: 1.5 mm
Number of tracks	: 2

LIST OF CABINET PARTS -

Item	Code number	Description
13	4822 530 70115	Clamping ring 3 mm
20	4822 530 80076	Spring ring 4.2 mm
21	4822 532 10333	Washer 4.3 mm
22	4822 502 10688	Screw M2.5x15
100	4822 462 70753	Lock plate
101	4822 411 40012	Knob assy
102	4822 410 21077	Record push-button
103	4822 410 21082	Cassette push-button
104	4822 403 50598	Lever
105	4822 492 30921	Tension spring
106	4822 413 30485	Knob
107	4822 443 50187	Bottom plate
108	4822 459 10285	Strip over knobs
109	4822 443 60355	Cassette cover assy
110	4822 492 30919	Tension spring
111	4822 443 20067	Cabinet assy
112	4822 466 80009	Plate
113	4822 290 80223	Battery spring
114	4822 240 30033	Loudspeaker
115	4822 403 50597	Lock bracket
116	4822 443 60356	Battery cover

LUBRICATING INSTRUCTIONS (see Fig. 2)

Shell Alvania (4822 389 10001)

Ball 62
Grooves and sunken parts in slide 300

Shell Tellus 33 (4822 390 10048)

Spindle 61 of reel disc 53
Spindle of roller 67
Spindle of flywheel 72
Hub and bearing of winding friction wheel 87
Hub and spindle of rope pulley 76

PHILIPS

PHILIPS INDUSTRIES LIMITED
Branches in all States

SUBJECT TO MODIFICATIONS

March 1971

C	726. 727. 729.748. 732.730. 728. 731. 733.734.739.737. 742. 741. 740.744. 747.749. 750.751.745. 746.743.738.736.735.
R	526. 573. 578. 580.529. 551.575.576.532.435.533. 535. 537.542. 547.541.550. 545. 436. 552. 563. 558.560. 564. 555. 567. 566.554.534. 437.
R	527. 579. 528. 581.531.574. 536.538.539. 548.543. 549. 546. 556. 559.561.562.565. 544.540.553. 530.

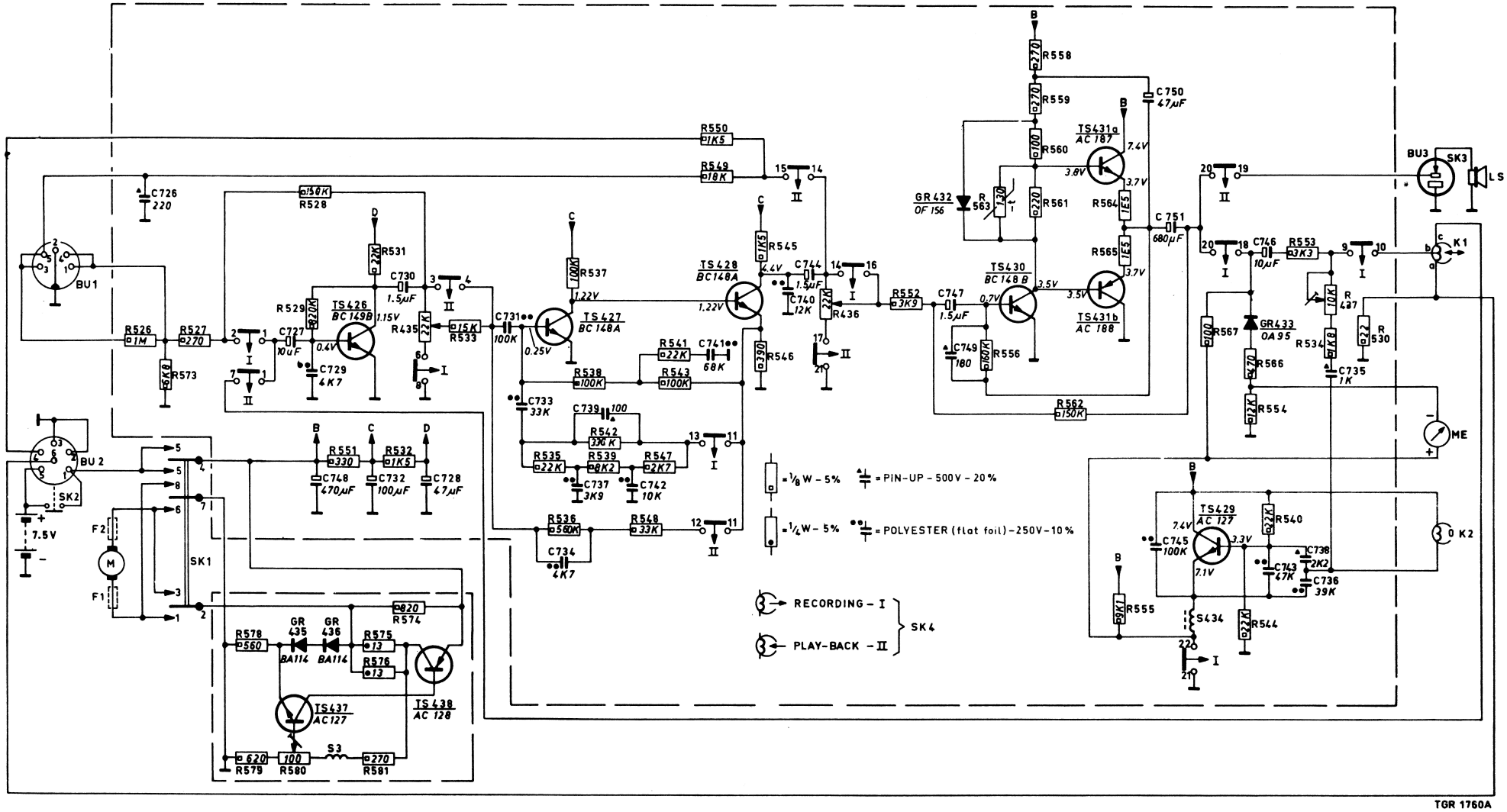

Fig.9

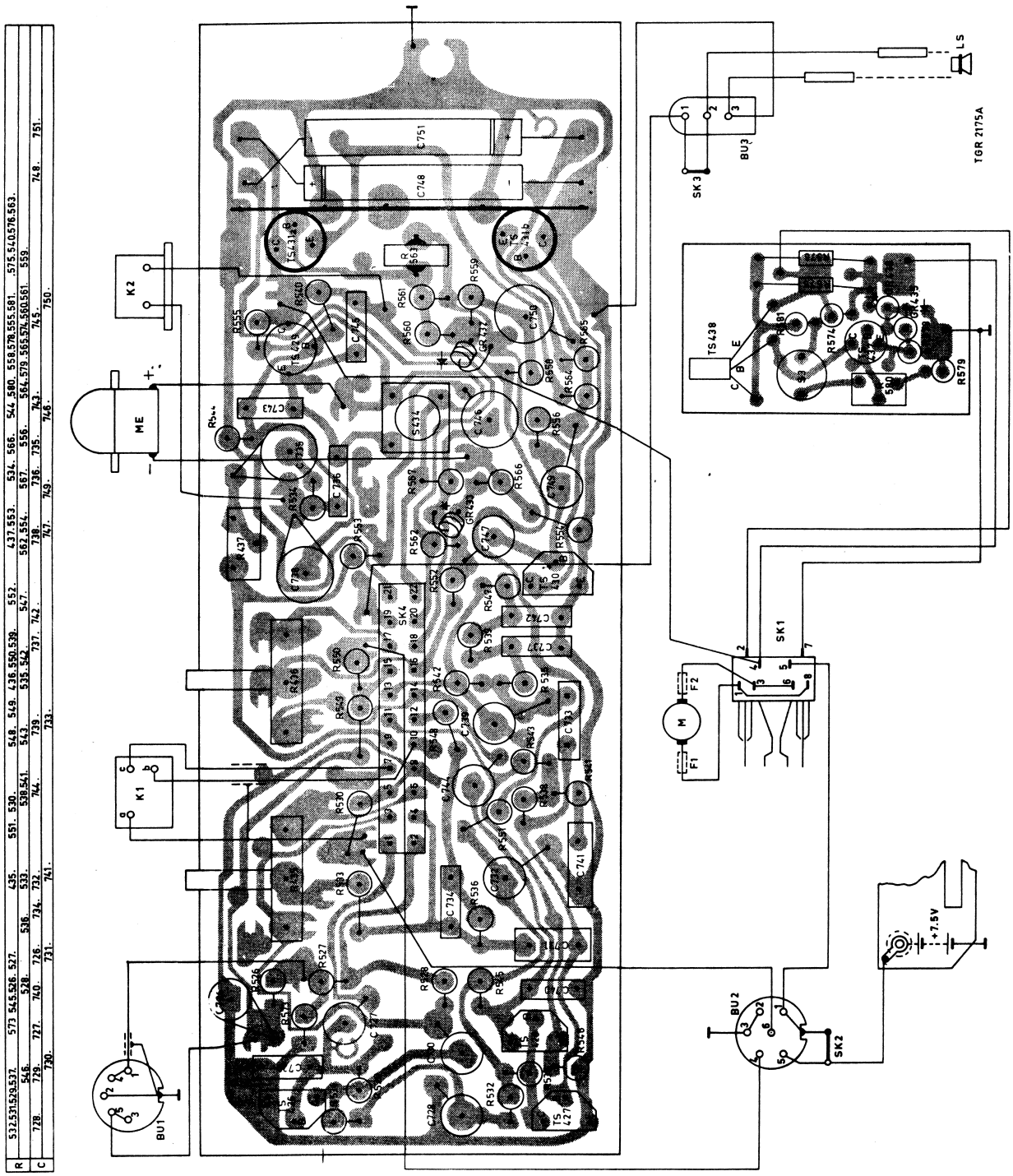

Fig.10

CS28142

R	532.531.529.537. 573 545.526. 527. 435. 551. 530. 548. 549. 436.550.539. 552. 437.553. 534. 566. 544 .580. 558.578.555.581. .575.540.576.563.
	546. 528. 536. 533. 538.541. 543. 535.542. 547. 562.554. 567. 556. 564.579.565.574.560.561. 559.
C	728. 729. 727. 740. 726. 734. 732. 744. 739. 737. 742. 738. 736. 735. 743. 745. 748. 751.
	730. 731. 741. 733. 747. 749. 746. 750.

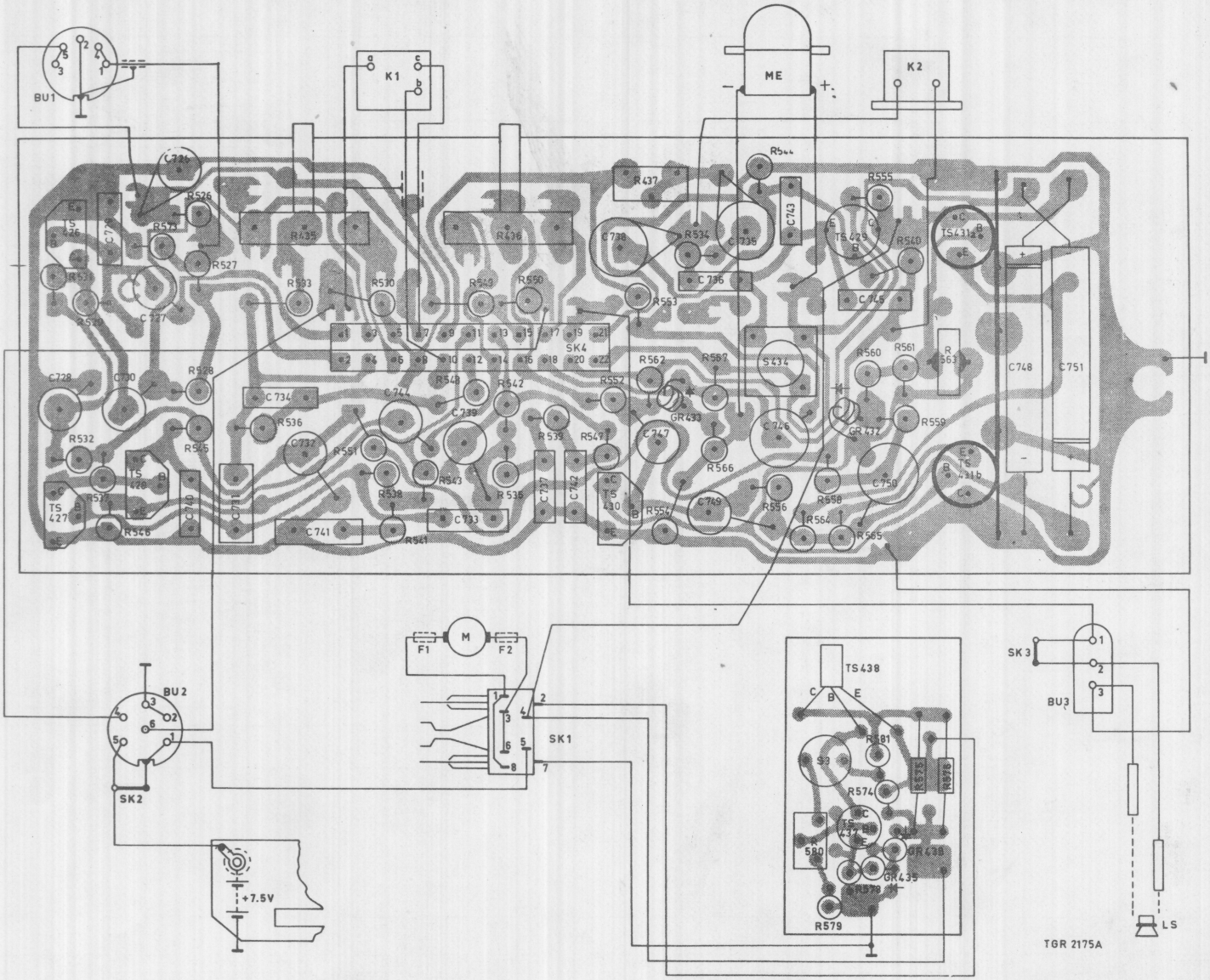

LIST OF MECHANICAL PARTS

Item	Code number	Description
1	4822 502 10951	Screw M2,5x5
2	4822 592 10679	Screw M2x5
3	4822 502 10682	Screw M2x12
4	4822 532 50265	Ring
5	4822 532 50648	Ring
6	4822 532 50268	Ring
7	4822 532 50043	Ring
8	4822 530 70043	Clamping ring 2.3 mm
9	4822 530 80079	Toothed washer 2.2 mm
10	4822 532 10331	Washer 2.2 mm
11	4822 530 80075	Spring ring 3.2 mm
12	4822 530 80087	Retaining ring 3.1 mm
13	4822 530 70115	Clamping ring 3 mm
14	4822 532 10215	Washer 2.8 mm
15	4822 532 50648	Ring
16	4822 532 50262	Ring
17	4822 530 70121	Clamping ring 1.5 mm
18	4822 532 10332	Washer 3.2 mm
51	4822 492 60925	Battery spring
52	4822 462 70107	Cap over reel disc
53	4822 528 10032	Reel disc
54	4822 492 60342	Leaf spring
55	4822 249 40046	Erase head
56	4822 249 10032	Recording-playback head
57	4822 492 50273	Pressure spring
58	4822 492 60343	Leaf spring
59	4822 535 90129	Spindle
60	4822 532 50329	Roller
61	4822 535 90062	Spindle
62	4822 520 40005	Ball
63	4822 403 50009	Lever
64	4822 403 20085	Bracket
65	4822 492 30254	Tension spring
66	4822 492 60927	Leaf spring
67	4822 528 90081	Roller
68	4822 492 60344	Wire spring
69	4822 403 50599	Bracket assy
70	4822 492 60912	Wire spring
71	4822 492 60341	Leaf spring
72	4822 528 60013	Flywheel
73	4822 404 20123	Idler wheel bracket assy
74		
75	4822 358 30076	Drive belt
76	4822 528 80147	Pulley
77	4822 358 30077	Drive belt
78	4822 520 10297	Flywheel bracket
79	4822 267 20127	Socket plate assy
80	4822 492 61186	Battery spring
81	4822 492 40438	Wire spring
82	4822 403 10112	Brake bracket
83	4822 403 40041	Pressure roller bracket assy
84	4822 492 40117	Torsion spring
85	4822 492 60926	Leaf spring
86	4822 492 60345	Torsion spring
87	4822 528 20162	Winding friction assy
87a	4822 532 50855	Felt disc
87b	4822 528 70231	Friction wheel
87c	4822 492 50911	Pressure spring
88	4822 466 40102	Strip
89	4822 532 70078	Rubber strip round motor
90	4822 361 20035	Motor
91	4822 403 30089	Switch plate
92	4822 278 90223	Switch
93	4822 532 60543	Rubber buffer
94	4822 492 61313	Contact spring
95	4822 268 20033	Contact spring
96	4822 268 20032	Contact spring
97	4822 520 30225	Bearing bush
300	4822 403 50601	Mounting plate

ELECTRICAL PART LIST

TS426	BC149B	
TS427-TS428	BC148A	
TS429-TS437	AC127	
TS430	BC148B	
TS431A	AC187	
TS431B	AC188	
TS438	AC128	
GR432	OF132	
GR433	OA95	
GR435-GR436	BA114	
F1-F2	4822 526 10085	
S3	4822 157 50013	
S434	4822 156 20459	
R437	4822 100 10024	10 K
R580	4822 100 10026	200 Ω
R435-R436	4822 101 30112	22 kΩ

SK1	Battery switch	4822 278 90223
SK2	See mechanical parts list, items 94 and 95	
SK3	Loudspeaker switch, see mechanical parts list, items 94 and 95	

LS	8 Ω		4822 240 30033
R557	4,7 Ω	1/8 W	4822 116 60003
R563 NTC	130 Ω		4822 116 30016
R564-R565	1,5 Ω	1/8 W	4822 116 60008
C730, C727, C744, C747	1,5 μF	10 V	4822 124 20342
C728-C750	56 μF	10 V	4822 124 20373
C729-C734	4700 μF	250 V	4822 121 40168
C732	100 μF	10 V	4822 124 20382
C746	10 μF	20 V	4822 124 10004
C748	560 μF	10 V	4822 124 20409
C751	820 μF	6,3 V	4822 124 20414

Screened cable from recording/playback head to print
4822 322 20013

SK4	Recording/playback switch	4822 277 30386
	Driving pin for SK4	4822 535 90135
	Motor p.c.board	4822 214 30036
	Meter ME	4822 347 10003

Warning

If the N2202 is used in a car holder N6705 mounted in a car whose plus pole of the accumulator is connected to chassis, there is a risk of a short-circuit in case of a contact between the ornamental material connected to the "-" pole and the metal of the car holder.
To prevent short-circuits the car holder should be provided with additional insulating material.

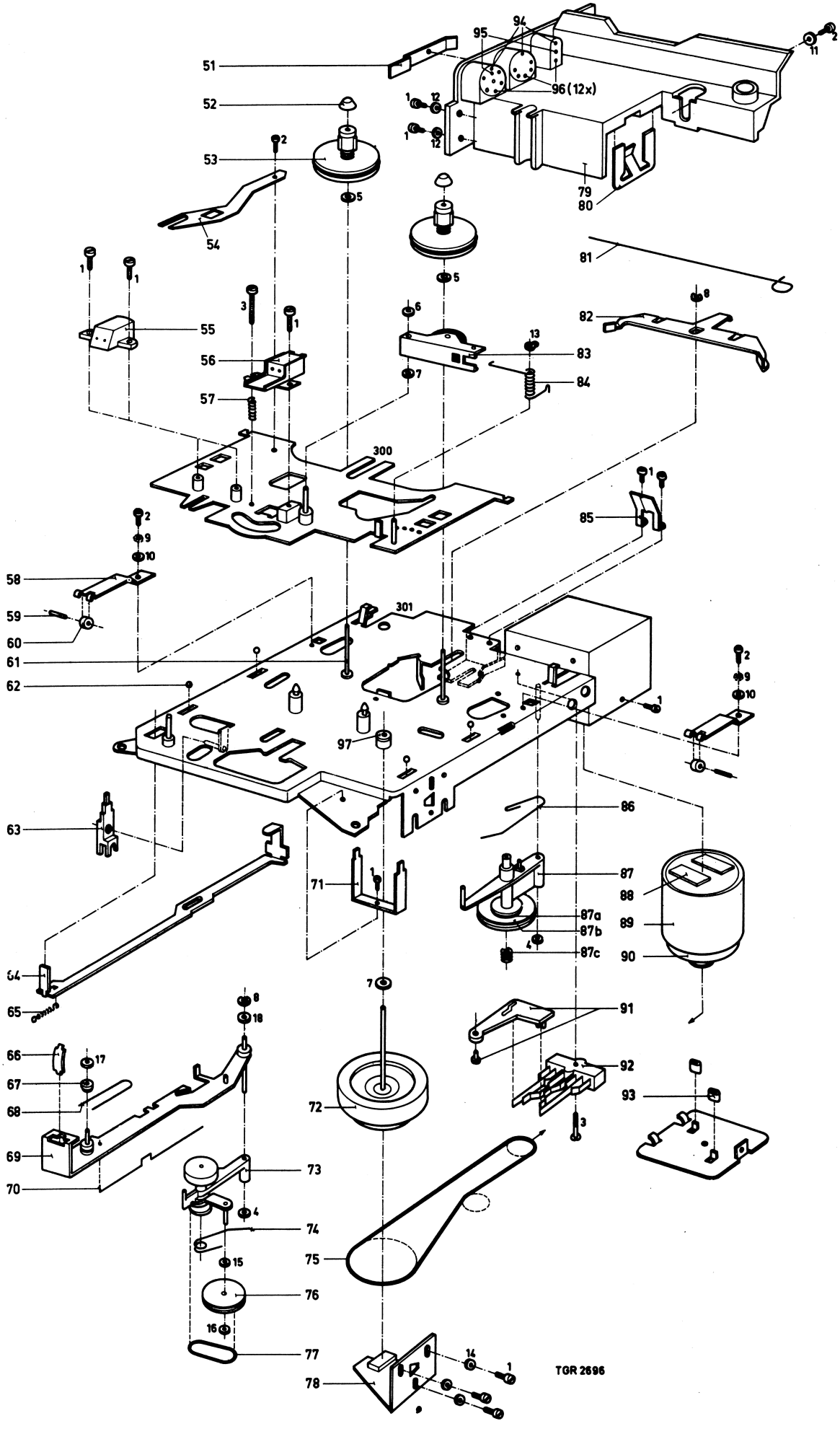
51
52
53
54
55
56
57
58
59
60
61
62
63
64
65
66
67
68
69
70
71
72
73
74
75
76
77
78
79
80
81
82
83
84
85
86
87
87a
87b
87c
88
89
90
91
92
93
94
95
96 (12x)
97
300
301
TGR 2696

Fig.2

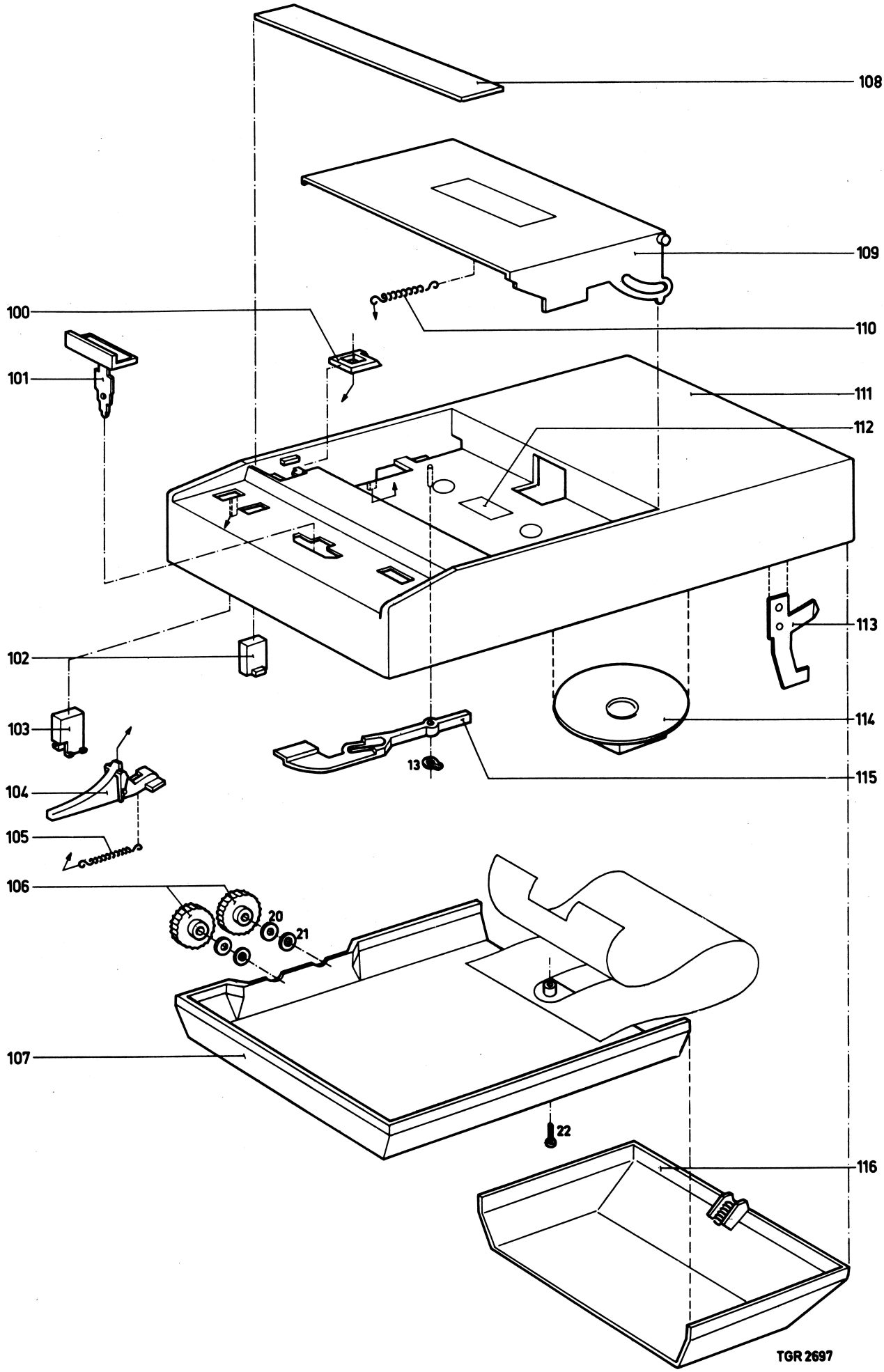

Fig.3

CS28138

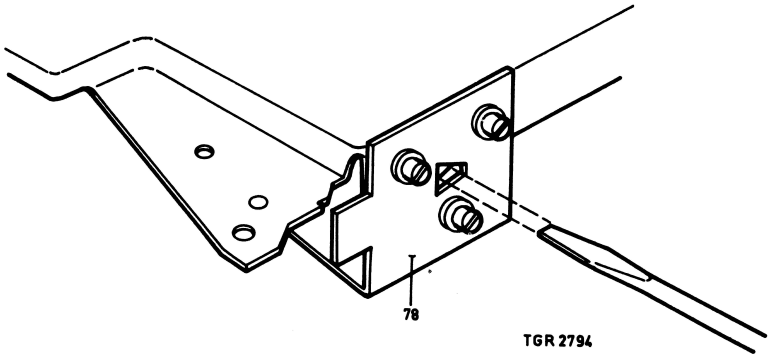

Fig.4

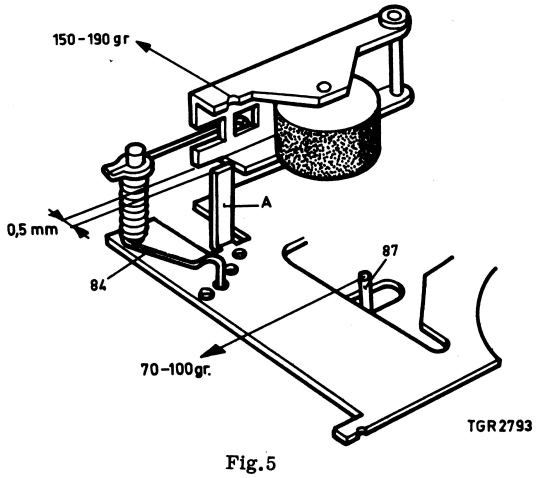

Fig.5

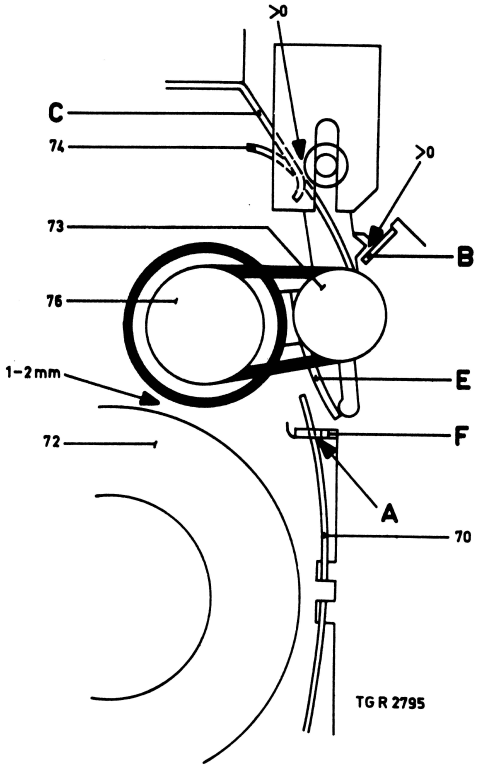

Fig. 6

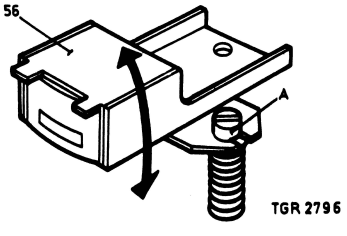

Fig. 7

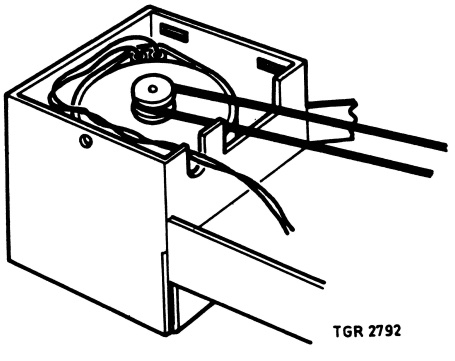

Fig. 8

HINTS FOR REPAIR

Removing the chassis (Figs. 1 and 3)

. Remove the tape cassette
. Remove operating control 101
. Disconnect battery lid 116
. Remove the batteries
. Remove screw 22 from bottom plate 107
. Remove bottom plate 107
. Remove the four screws with which the mounting plate is secured
. Remove the chassis from the cabinet

Replacing drive belt 75 (Figs. 2 and 4)

! Remove the three screws with which the lower bearing bracket 78 of the flywheel is fitted to the chassis
. Remove this lower bearing bracket 78
. Remove the screw with which the cover plate is fitted to the screening bush
. Remove this cover plate
. The belt can now be removed

Note: When fitting the lower bearing bracket 78 of the flywheel, be sure that the axial play of flywheel 72 is minimum (0.1-0.2 mm).
Adjust this play by inserting a screwdriver in the hole in the lower bearing bracket (see Fig. 4)

Replacing the flywheel and the capstan idler wheel 87, Fig. 2

. Remove the three screws by which the lower bearing bracket 78 of the flywheel is fitted to the chassis
. Remove the lower bearing bracket 78
. Remove the motor p.c. board
. Disconnect the drive belt on the side of the flywheel
. Remove the nylon clamping ring from idler wheel bracket 87
. Flywheel 72 and capstan idler wheel bracket 87 must now be removed simultaneously

Note: During assembly care must be taken that the pin of the idler wheel bracket engages with the hook of wire spring 86.

Replacing the motor (Fig. 2)

. Remove the screw with which the cover plate is fitted to the screening bush of the motor
. Remove the cover plate
. The motor can now be removed from the screening bush
. To prevent interferences, the anti-interference beads should be slid as far as possible along the connecting wires of the motor and be placed in the correct corner of the motor housing (see Fig. 8).

Replacing the reel discs 53 (Fig. 2)

. Pull the cap from reel disc spindle 61
. Now reel disc 53 can be simply removed

MECHANICAL ADJUSTMENTS

Capstan idler wheel (Fig. 5)

. Switch the set to "Playback"
. The pressure of the pulley against the right-hand reel disc must be 70-100g
. Adjust this pressure by slightly bending the wire spring below idler wheel lever

Recording/playback head (Fig. 7)

The air gap of the recording/playback head should be adjusted as follows:
. Remove the cover over the heads 108 (see Fig. 1)
. Place a cassette with a 6300-Hz test tape (code-number 8945 600 11501) in the recorder
. Switch the recorder to "Playback"
. Connect a valve voltmeter to points 2 and 3 of BU1
. Adjust for maximum output voltage by means of screw A
. Paint the screw with cellulose lacquer after this adjustment

Pressure-roller lever (Fig. 5)

. Switch the recorder to "Playback"
. The force required for pulling the pressure roller just off the capstan should be between 150 and 190 g
. This force can be adjusted by slightly displacing torsion spring 84

Checking winding friction 87 (Fig. 5)

It may occur that the tape in the cassette is not wound by the right-hand reel disc, or only irregularly. As the tape is fed by the capstan, the tape will be damaged; in some cases the drive will even be blocked.

This fault may have several causes:
a. The winding friction is too small
b. The pressure of the pulley of idler wheel bracket 87 against the right-hand reel disc is not correct. This pressure should be between 70 and 100 g; its adjustment depends, among other things, on the winding friction.

This friction is measured as follows:
Connect the set to an external supply source via an ammeter. Switch the set without a cassette to "Playback" and read the current consumption. Block the right-hand reel disc and read the current increase, which should be 8-16 mA. If the current increase is less than 8 mA, the pressure of the pulley of idler wheel bracket 87 against the right-hand reel disc must be decreased to maximum 70 g. This can be adjusted by slightly bending wire spring 86 (see Figs. 2 and 5).
If the current increase exceeds 16 mA, the pressure of the pulley against the right-hand reel disc should be increased to up to a maximum of 100 g; this can be adjusted by slightly bending wire spring 86 (see Figs. 2 and 5).
If in this way (by blocking the right-hand reel disc) no current increase of 8-16 mA can be obtained, the friction felt disc and, if necessary, the spring and the friction wheel should be replaced.

Adjusting the pulley lever (see Fig. 6)

Switch the recorder to "Playback". Tag B should now be just clear of the cam of the pulley lever. Wheel 76 should be 1-2 mm away from the flywheel. This can be adjusted by bending tag E. Spring 74 should than be clear of lever 73. This can be adjusted by bending tag C.
In position "Rewind" spring 70 should be clear of tag F; in position "Fast Forward" spring 70 should be clear of lever 73. These two settings can be affected by slightly bending spring 70.

Checking speed

Checking the speed is performed by means of test tape 8945 600 11501 on which a 800-Hz signal is modulated at every 4,75 m.
Place the cassette with a test tape in the recorder. Switch the recorder to "Playback". The time between two 800-Hz signals must be between 95 and 103 seconds. If the time is < 95 seconds, the speed is too high; if the time is > 103 seconds, the speed is too low.
The speed is adjusted with R580.