ALPINE®
SERVICE MANUAL

4/3/2 Channel Power Amplifier

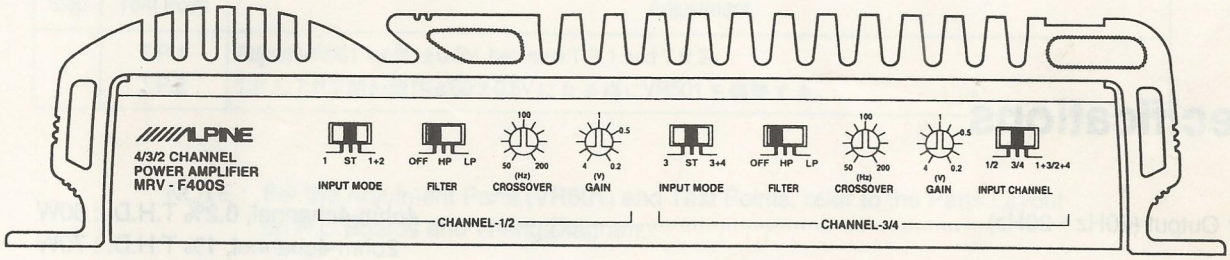

サービス費用区分	B
技術資料 No.	PM-60-O

MRV-F400S

Contents

Specifications 2
Adjustment Procedures 3
Block Diagram 4
Parts Layout on P.C.Boards and Wiring Diagram ..... 5 to 7
Schematic Diagram ..... 8 to 10
Electrical Parts List ..... 11 to 14
Exploded View ..... 15 to 16
Cabinet Assembly Parts List 17
Packing Assembly Parts List 18
Packing Method View 18

Additional Schematic Diagram inserted.

Specifications

Power Output (20Hz ~20Hz)	4ohm-4channel, 0.2% T.H.D. : 60W
	2ohm-4channel, 1% T.H.D. : 70W
	4ohm-2channel, 1% T.H.D., BTL : 150W
S/N Ratio (60W/ch/4ohm, Input shorted)	100dB
Input Sensitivity	SP. 65W/ch Output, CW : 0.2V±3dB
	Center : 1V±3dB
	CCW : 4V±3dB
	PRE. 1V Output, Center : 1V+1, -3dB
Input Impedance	27±6k ohm
Ferquency Response (-1dB at 1kHz)	20Hz~40kHz
Current Drain	No Signal : 1.7A
	4ohm-4channel, 10% T.H.D. : 50A
	2ohm-4channel, 10% T.H.D. : 75A
Channel Separation (Input Shorted, at 1kHz)	55dB
Fuse Requirement	20A (For Battery Line)
Power Source	DC14.4V (11 ~16V)
Semiconductors	16IC's, 62Transistors, 24Diodes, 4Zener Diodes, 10FET's
Dimensions (W×H×D)	240×53×330mm
Weight	4kg

NOTE : Due to Continuing product improvement, specifications and designs are subject to change without notice.

Adjustment Procedures

(1) First, rote VR501 fully counter clock wise.
調整を始める前にVR501を反時計方向いっぱいに回転させる。

(2) Connection

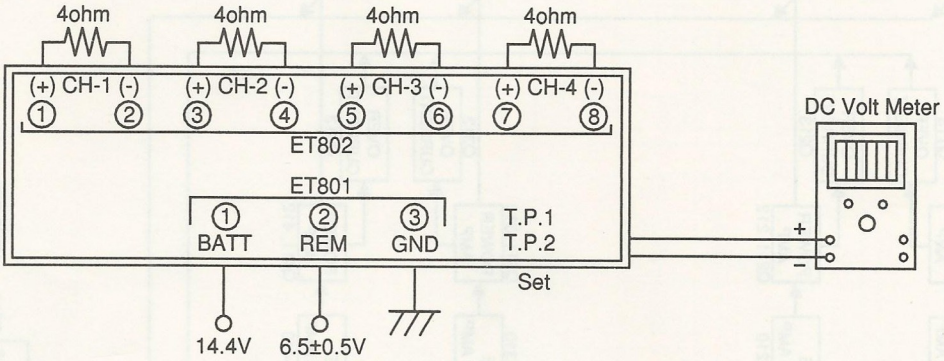

(3) Adjustment Procedures

Step	Test Point	Adjustment
1	T.P.1 T.P.2	Adjust VR501 for 60 ± 0.5V between T.P.1 and T.P.2. T.P.1, T.P.2間の電圧が60 ± 0.5Vになる様にVR501を調整する。

NOTE : For the Adjutment Parts (VR501) and Test Points, refer to the Parts Layout on P.C.Boards and Wiring Diagram.

※ 調整部品（VR501）及びテストポイントの詳細については、「Parts Layout on P.C.Boards and Wiring Diagram」を参照願います。

Block Diagram

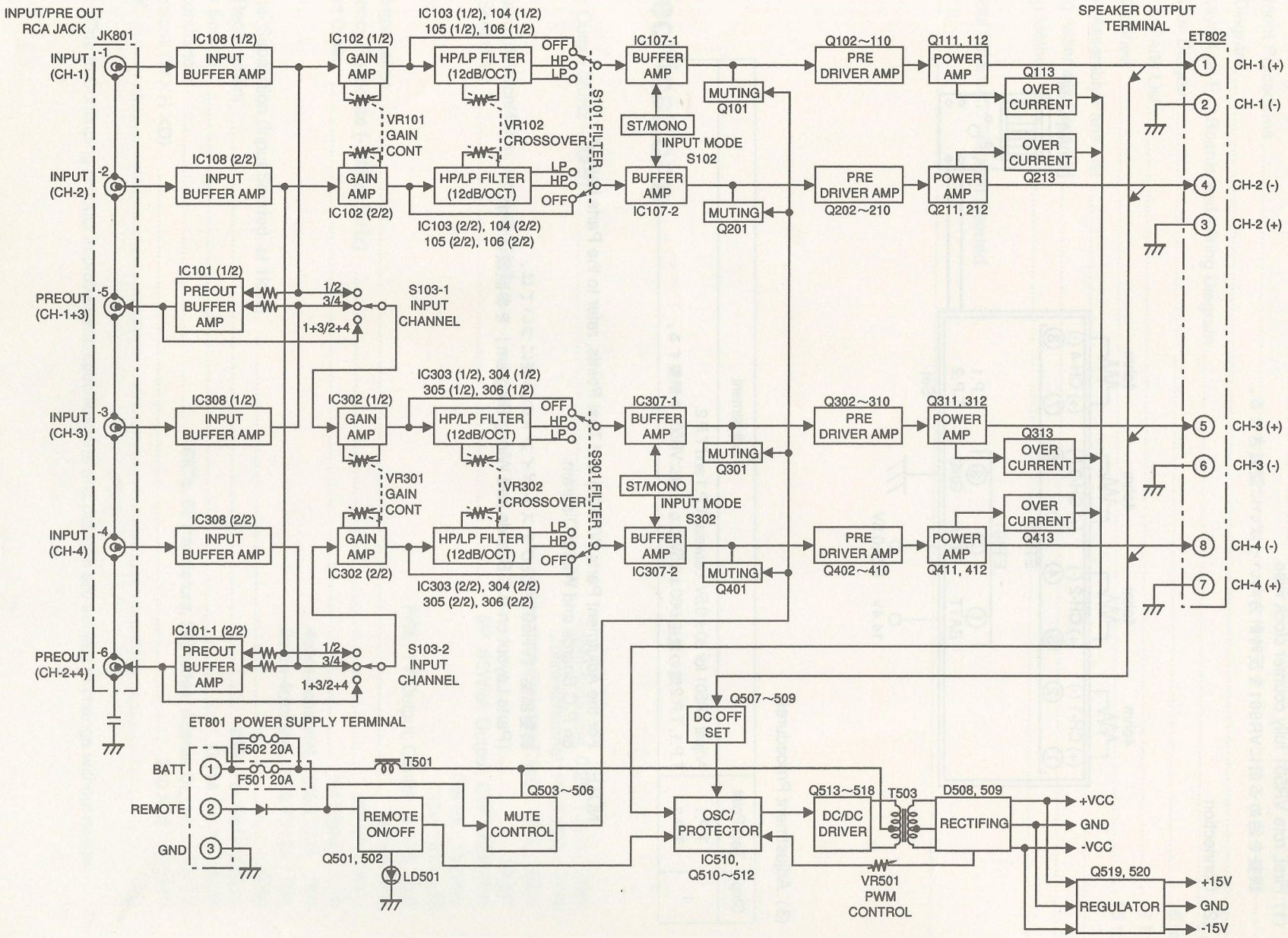

Parts Layout on P.C.Boards and Wiring Diagram

All P.C.Boards viewed from soldered side.

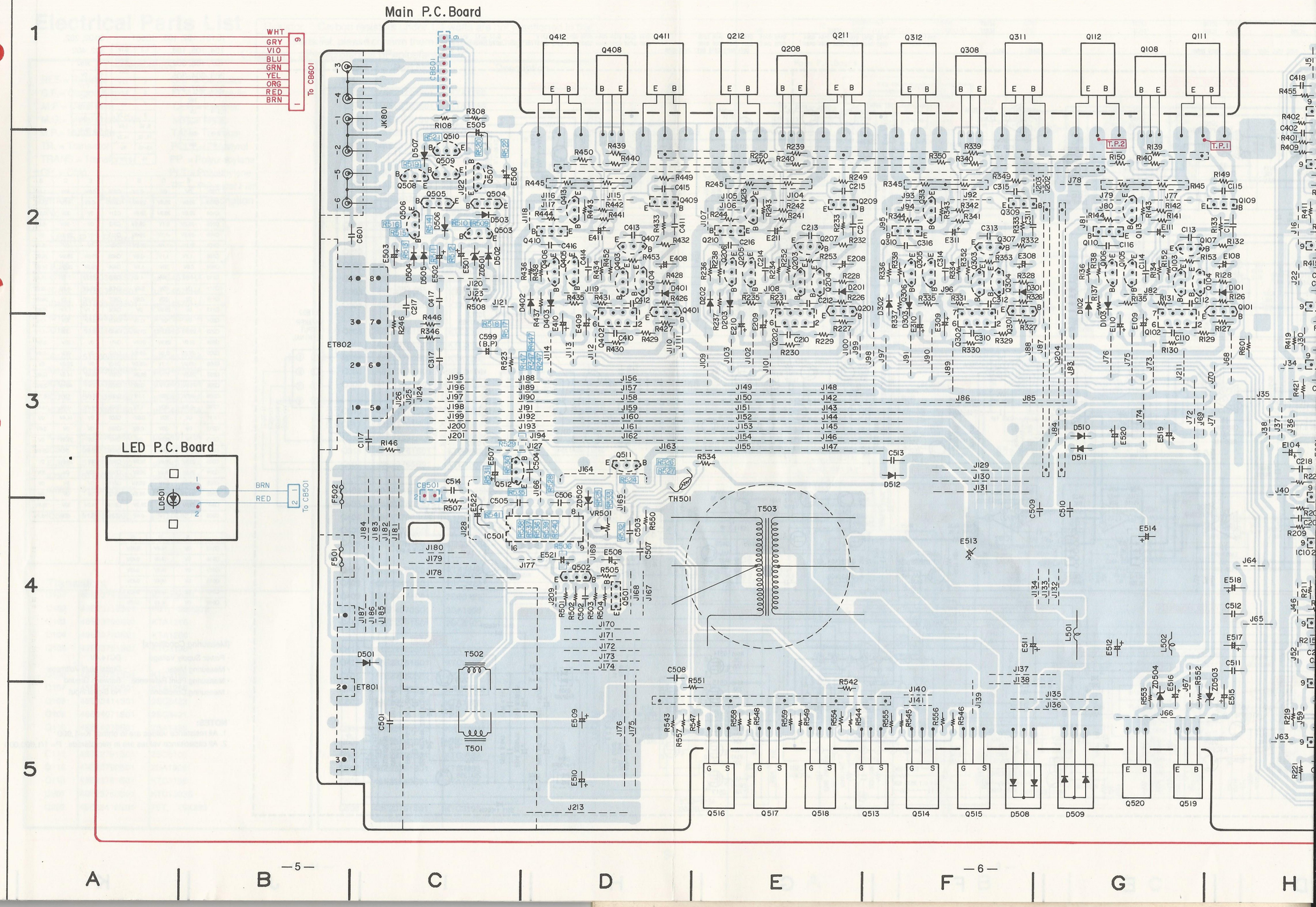

gram

All P.C.Boards viewed from soldered side.

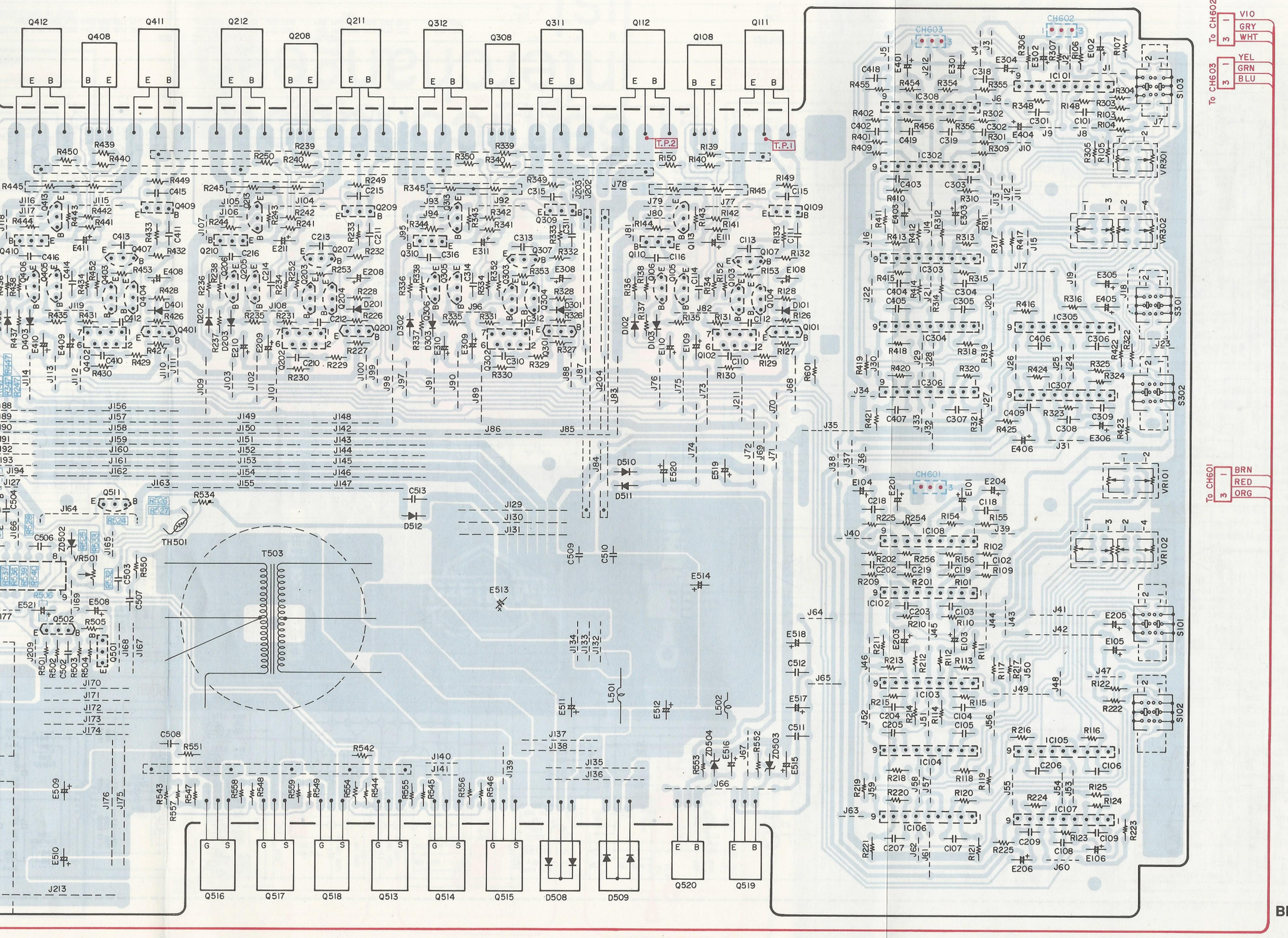

Blue Pattern : Foil Side Pattern

D | E | F | G | H | I | J | K | L

Schematic Diagram

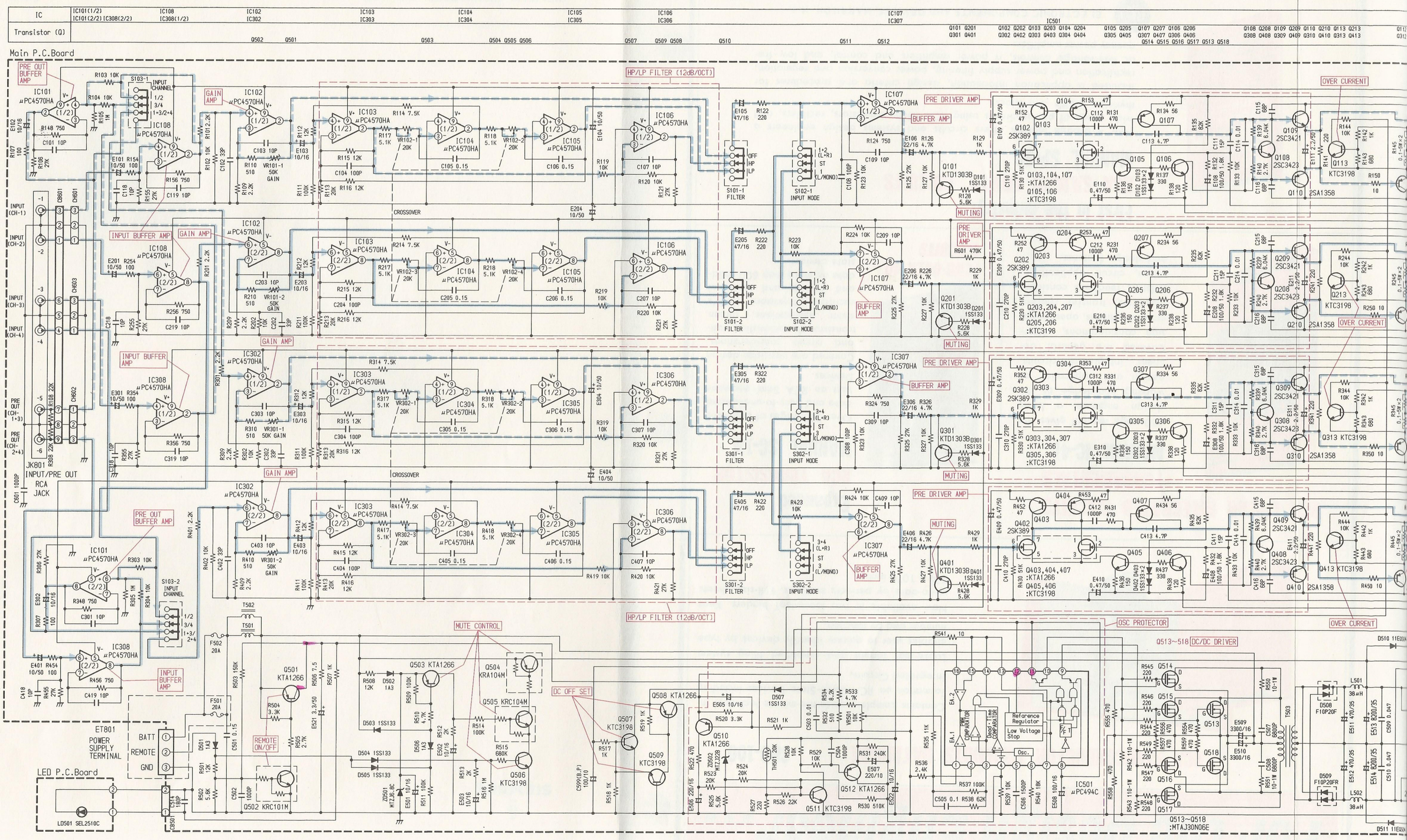

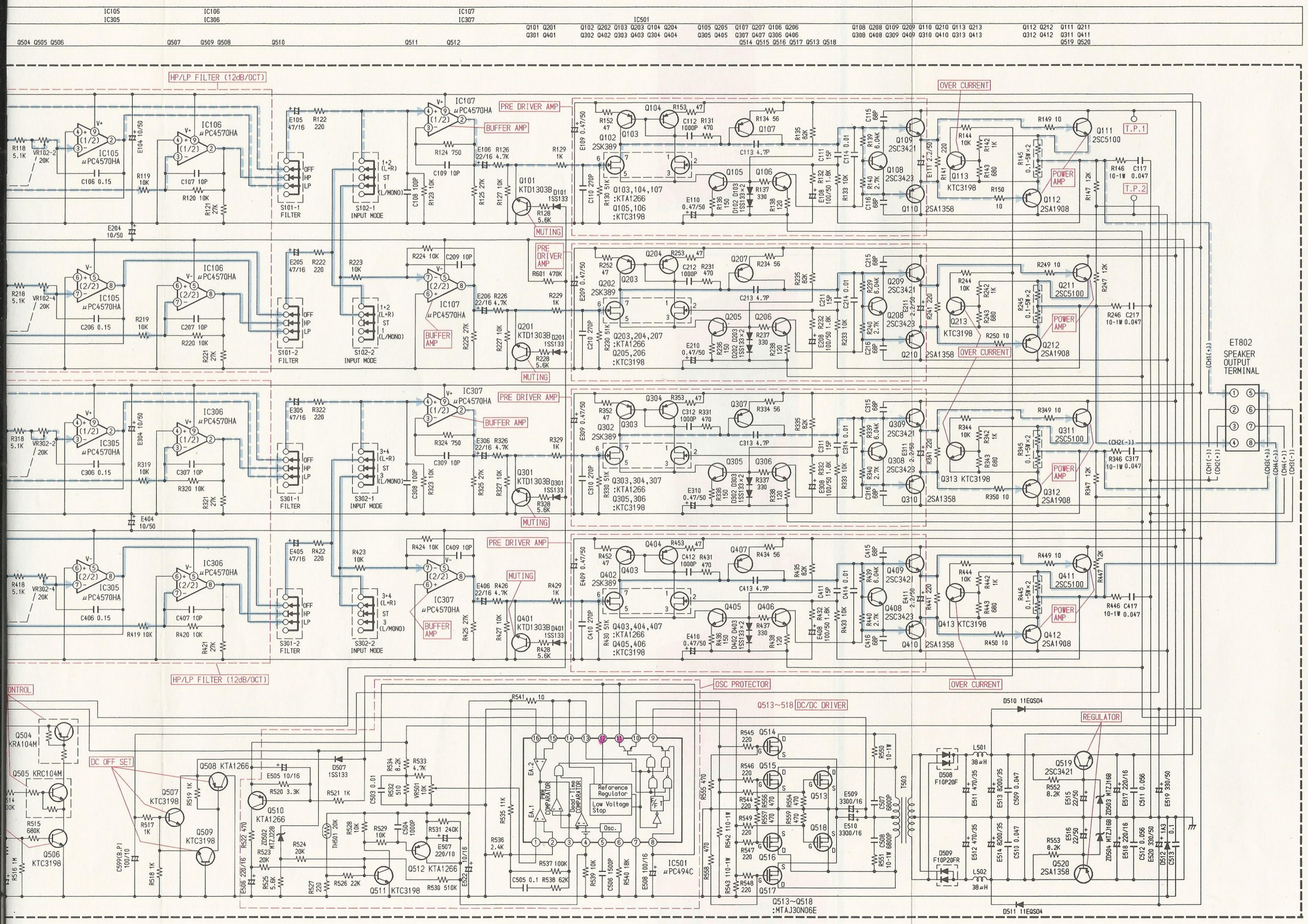

IC101, 102, 103, 104, 105, 106, 107, 108, 302, 303, 304, 305, 306, 307, 308

1	15V
2~4	0V
5	-15V
6~8	0V
9	15V

IC501

1,2	0.1V
3	3.9V
4	0.2V
5	1.7V
6	3.8V
7	0V
8	14.3V
9, 10	0.6V
11, 12	14.3V
13~15	5V
16	0V

Q102, 202, 302, 402

1	28.9V
2	0V
3	0.1V
4	NC
5	0.1V
6	0V
7	28.9V

	E	C	B		E	C	B
Q101	0V	0V	-0.1V	Q309	0.6V	30V	1.1V
Q103	29.6V	28.9V	28.9V	Q310	-0.6V	-30V	-1.1V
Q104	29.6V	28.9V	28.9V	Q311	0V	30V	0.6V
Q105	-29.2V	0.1V	-28.6V	Q312	0V	-30V	-0.6V
Q106	-29.2V	-1.1V	-28.6V	Q313	0V	29.9V	0V
Q107	29.5V	1.1V	28.9V	Q401	0V	0V	-0.1V
Q108	-1.1V	1.1V	-0.6V	Q403	29.6V	28.9V	28.9V
Q109	0.6V	30V	1.1V	Q404	29.6V	28.9V	28.9V
Q110	-0.6V	-30V	-1.1V	Q405	-29.2V	0.1V	-28.6V
Q111	0V	30V	0.6V	Q406	-29.2V	-1.1V	-28.6V
Q112	0V	-30V	-0.6V	Q407	29.5V	1.1V	28.9V
Q113	0V	29.9V	0V	Q408	-1.1V	1.1V	-0.6V
Q201	0V	0V	-0.1V	Q409	0.6V	30V	1.1V
Q203	29.6V	28.9V	28.9V	Q410	-0.6V	-30V	-1.1V
Q204	29.6V	28.9V	28.9V	Q411	0V	30V	0.6V
Q205	-29.2V	0.1V	-28.6V	Q412	0V	-30V	-0.6V
Q206	-29.2V	-1.1V	-28.6V	Q413	0V	29.9V	0V
Q207	29.5V	1.1V	28.9V	Q501	14.4V	14.3V	13.6V
Q208	-1.1V	1.1V	-0.6V	Q502	0V	46mV	2.9V
Q209	0.6V	30V	1.1V	Q503	6.8V	0V	6.7V
Q210	-0.6V	-30V	-1.1V	Q504	14.4V	-14V	14.4V
Q211	0V	30V	0.6V	Q505	0V	14.4V	0V
Q212	0V	-30V	-0.6V	Q506	0V	0V	0.6V
Q213	0V	29.9V	0V	Q507	0V	29.6V	0V
Q301	0V	0V	-0.1V	Q508	29.6V	0V	29.6V
Q303	29.6V	28.9V	28.9V	Q509	0V	29.6V	0V
Q304	29.6V	28.9V	28.9V	Q510	30V	0V	30V
Q305	-29.2V	0.1V	-28.6V	Q511	0V	5V	0V
Q306	-29.2V	-1.1V	-28.6V	Q512	5V	0V	5V
Q307	29.5V	1.1V	28.9V	Q519	15.3V	30V	15.9V
Q308	-1.1V	1.1V	-0.6V	Q520	-15.1V	-30V	-15.7V

	S	D	G
Q513	0V	14.4V	0.43V
Q514	0V	14.4V	0.43V
Q515	0V	14.4V	0.43V
Q516	0V	14.4V	0.43V
Q517	0V	14.4V	0.43V
Q518	0V	14.4V	0.43V

[Measuring Conditions]

- Power Supply Voltage : DC14.4V
- Measuring Meter : Digital Multi Voltmeter
- Measuring Point Reference : Between Ground
- Measuring Conditions : No Signal Input

NOTES:

1. All resistance values are in ohms. K= 1,000
2. All capacitance values are in microfarads. P= 1/1,000,000

D E F G H I J K L

on P.C.Boards and Wiring Diagram

All P.C.Boards viewed from soldered side.

Main P.C.Board

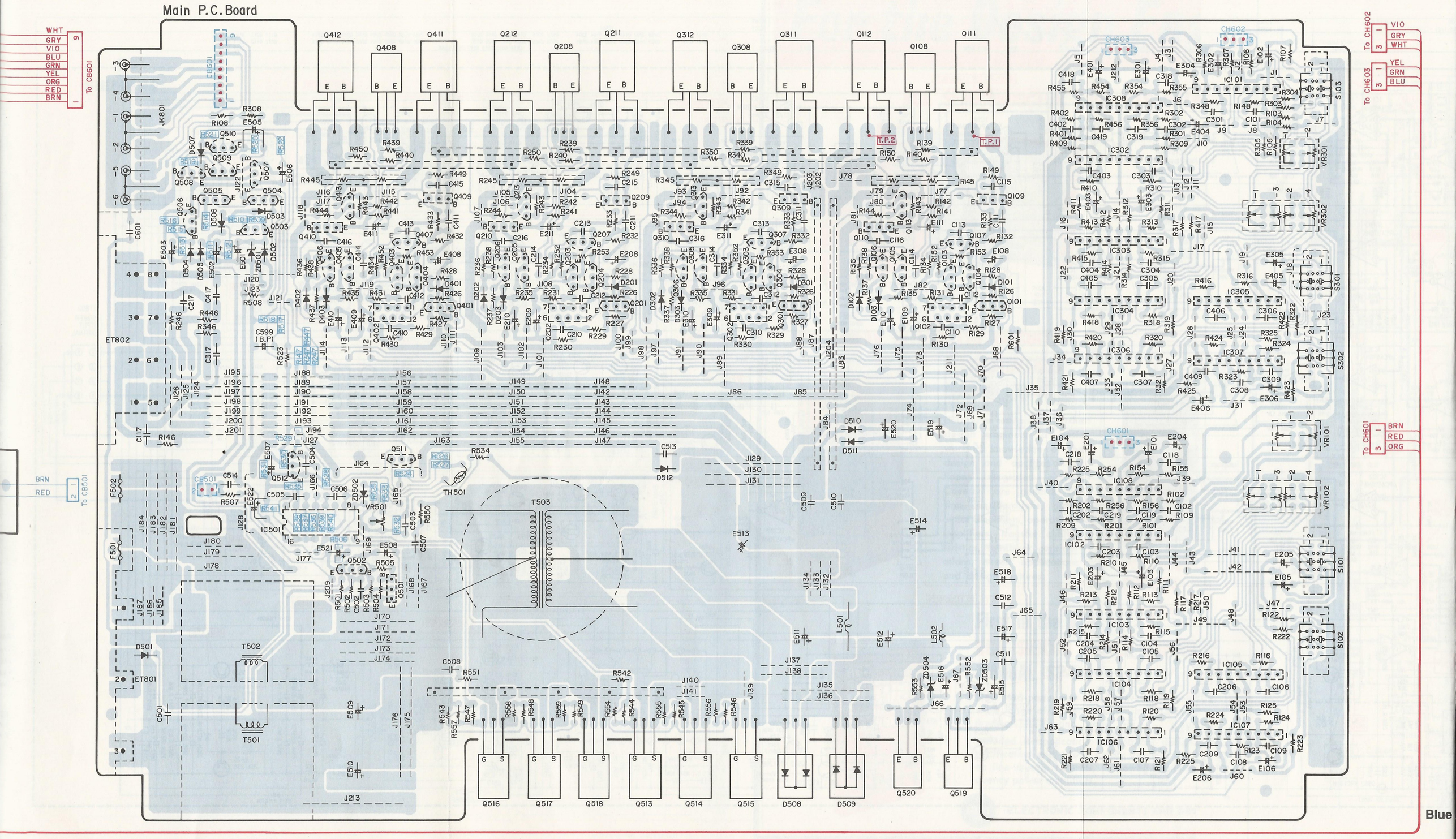

Blue

Electrical Parts List

Resistor : Carbon resistors under 1/4 watts are not mentioned in the parts list, please confirm them by schematic diagram.
Capacitor : μF=microfarads,pF=picofarads

Abbreviations

RES.= Resistor	CAP.= Capacitor
C.F.= Carbon Film	ELY.= Electrolytic
M.F.= Metal Film	CER.= Ceramic
M.O.= Metal Oxide Film	MYL.= Mylar
M.P.= Metal Plate	TAN.= Tantalum
TR. = Transistor	POLY.= Polystyrol
TRANS.= Transformer	PP. = Polypropylene
CP. = Chip	PLT.= Polyethylene
	PF. = Polyester Film

Symbol No.	Part No.	Description
Main P.C.Board		
IC's		
IC101	51E03808S01	μPC4570HA
IC102	51E03808S01	μPC4570HA
IC103	51E03808S01	μPC4570HA
IC104	51E03808S01	μPC4570HA
IC105	51E03808S01	μPC4570HA
IC106	51E03808S01	μPC4570HA
IC107	51E03808S01	μPC4570HA
IC108	51E03808S01	μPC4570HA
IC302	51E03808S01	μPC4570HA
IC303	51E03808S01	μPC4570HA
IC304	51E03808S01	μPC4570HA
IC305	51E03808S01	μPC4570HA
IC306	51E03808S01	μPC4570HA
IC307	51E03808S01	μPC4570HA
IC308	51E03808S01	μPC4570HA
IC501	51E23413S01	μPC494C
Transistors		
Q101	48E23765S01	KTD1303B
Q102	48E23418S01	FET, 2SK389
Q103	48E23760S01	KTA1266
Q104	48E23760S01	KTA1266
Q105	48E23761S01	KTC3198
Q106	48E23761S01	KTC3198
Q107	48E23760S01	KTA1266
Q108	48E23414S01	2SC3423
Q109	48E04071S01	2SC3421
Q110	48E04070S01	2SA1358
Q111	48E22791S01	2SC5100
Q112	48E22792S01	2SA1908
Q113	48E23761S01	KTC3198
Q201	48E23765S01	KTD1303B
Q202	48E23418S01	FET, 2SK389
Q203	48E23760S01	KTA1266
Q204	48E23760S01	KTA1266
Q205	48E23761S01	KTC3198
Q206	48E23761S01	KTC3198
Q207	48E23760S01	KTA1266
Q208	48E23414S01	2SC3423
Q209	48E04071S01	2SC3421
Q210	48E04070S01	2SA1358
Q211	48E22791S01	2SC5100
Q212	48E22792S01	2SA1908
Q213	48E23761S01	KTC3198
Q301	48E23765S01	KTD1303B
Q302	48E23418S01	FET, 2SK389
Q303	48E23760S01	KTA1266
Q304	48E23760S01	KTA1266
Q305	48E23761S01	KTC3198
Q306	48E23761S01	KTC3198
Q307	48E23760S01	KTA1266
Q308	48E23414S01	2SC3423
Q309	48E04071S01	2SC3421
Q310	48E04070S01	2SA1358
Q311	48E22791S01	2SC5100
Q312	48E22792S01	2SA1908
Q313	48E23761S01	KTC3198
Q401	48E23765S01	KTD1303B
Q402	48E23418S01	FET, 2SK389
Q403	48E23760S01	KTA1266
Q404	48E23760S01	KTA1266
Q405	48E23761S01	KTC3198
Q406	48E23761S01	KTC3198
Q407	48E23760S01	KTA1266
Q408	48E23414S01	2SC3423
Q409	48E04071S01	2SC3421
Q410	48E04070S01	2SA1358
Q411	48E22791S01	2SC5100
Q412	48E22792S01	2SA1908
Q413	48E23761S01	KTC3198
Q501	48E23760S01	KTA1266
Q502	48E23762S01	KRC101M
Q503	48E23760S01	KTA1266
Q504	48E23764S01	KRA104M
Q505	48E23763S01	KRC104M
Q506	48E23761S01	KTC3198
Q507	48E23761S01	KTC3198
Q508	48E23760S01	KTA1266
Q509	48E23761S01	KTC3198

Symbol No.	Part No.	Description
Q510	48E23760S01	KTA1266
Q511	48E23761S01	KTC3198
Q512	48E23760S01	KTA1266
Q513	48E23769S01	FET, MTAJ30N06E
Q514	48E23769S01	FET, MTAJ30N06E
Q515	48E23769S01	FET, MTAJ30N06E
Q516	48E23769S01	FET, MTAJ30N06E
Q517	48E23769S01	FET, MTAJ30N06E
Q518	48E23769S01	FET, MTAJ30N06E
Q519	48E04071S01	2SC3421
Q520	48E04070S01	2SA1358

Diodes

D101	48E21188S01	1SS133
D102	48E21188S01	1SS133
D103	48E21188S01	1SS133
D201	48E21188S01	1SS133
D202	48E21188S01	1SS133
D203	48E21188S01	1SS133
D301	48E21188S01	1SS133
D302	48E21188S01	1SS133
D303	48E21188S01	1SS133
D401	48E21188S01	1SS133
D402	48E21188S01	1SS133
D403	48E21188S01	1SS133
D501	48E23768S01	1A3
D502	48E23768S01	1A3
D503	48E21188S01	1SS133
D504	48E21188S01	1SS133
D505	48E21188S01	1SS133
D506	48E23768S01	1A3
D507	48E21188S01	1SS133
D508	48E23770S01	F10P20F
D509	48E23771S01	F10P20FR
D510	48E20779S01	11EQS04
D511	48E20779S01	11EQS04
D512	48E23768S01	1A3
ZD501	48E23767S01	Zener, MTZJ6.8C
ZD502	48E23396S01	Zener, MTZJ22B
ZD503	48E23766S01	Zener, MTZJ16B
ZD504	48E23766S01	Zener, MTZJ16B

Transformers / Thermistor

T501	25E06343S01	Choke
T502	25E06343S01	Choke
T503	24E23777S01	DC/DC
TH501	48E11405S01	Thermistor, 20K ohm

Coils

L501	24E22005S01	38μH
L502	24E22005S01	38μH

Switches

S101	40E23776S01	Slide, SSAF123NAE (FILTER)
S102	40E23776S01	Slide, SSAF123NAE (INPUT MODE)
S103	40E23776S01	Slide, SSAF123NAE (INPUT CHANNEL)
S301	40E23776S01	Slide, SSAF123NAE (FILTER)
S302	40E23776S01	Slide, SSAF123NAE (INPUT MODE)

Capacitors

C101	08E21461S01	CER., 10pF
E101	23E21187S01	ELY., 10μF / 50V
C102	08E21987S01	CER., 33pF
E102	23E20773S01	ELY., 10μF / 16V
C103	08E21461S01	CER., 10pF
E103	23E20773S01	ELY., 10μF / 16V
C104	21E06640S01	CER., 100pF
E104	23E21187S01	ELY., 10μF / 50V
C105	08E23758S01	POLY., 0.15μF
E105	23E21149S01	ELY., 47μF / 16V
C106	08E23758S01	POLY., 0.15μF
E106	23E21150S01	ELY., 22μF / 16V
C107	08E21461S01	CER., 10pF
C108	21E06640S01	CER., 100pF
E108	23E23751S01	ELY., 100μF / 50V
C109	08E21461S01	CER., 10pF
E109	23E21460S01	ELY., 0.47μF / 50V
C110	08E04860S02	CER., 270pF
E110	23E21460S01	ELY., 0.47μF / 50V
C111	21E07286S03	CER., 15pF
E111	23E21151S01	ELY., 2.2μF / 50V
C112	08E21991S01	CER., 1000pF
C113	08E23759S01	CER., 4.7pF
C114	08E23754S01	POLY., 0.01μF
C115	08E21988S01	CER., 68pF
C116	08E21988S01	CER., 68pF
C117	08E23755S01	POLY., 0.047μF
C118	08E21461S01	CER., 10pF
C119	08E21461S01	CER., 10pF
E201	23E21187S01	ELY., 10μF / 50V

Symbol No.	Part No.	Description
C202	08E21987S01	CER., 33pF
C203	08E21461S01	CER., 10pF
E203	23E20773S01	ELY., 10μF / 16V
C204	21E06640S01	CER., 100pF
E204	23E21187S01	ELY., 10μF / 50V
C205	08E23758S01	POLY., 0.15μF
E205	23E21149S01	ELY., 47μF / 16V
C206	08E23758S01	POLY., 0.15μF
E206	23E21150S01	ELY., 22μF / 16V
C207	08E21461S01	CER., 10pF
E208	23E23751S01	ELY., 100μF / 50V
C209	08E21461S01	CER., 10pF
E209	23E21460S01	ELY., 0.47μF / 50V
C210	08E04860S02	CER., 270pF
E210	23E21460S01	ELY., 0.47μF / 50V
C211	21E07286S03	CER., 15pF
E211	23E21151S01	ELY., 2.2μF / 50V
C212	08E21991S01	CER., 1000pF
C213	08E23759S01	CER., 4.7pF
C214	08E23754S01	POLY., 0.01μF
C215	08E21988S01	CER., 68pF
C216	08E21988S01	CER., 68pF
C217	08E23755S01	POLY., 0.047μF
C218	08E21461S01	CER., 10pF
C219	08E21461S01	CER., 10pF
C301	08E21461S01	CER., 10pF
E301	23E21187S01	ELY., 10μF / 50V
C302	08E21987S01	CER., 33pF
E302	23E20773S01	ELY., 10μF / 16V
C303	08E21461S01	CER., 10pF
E303	23E20773S01	ELY., 10μF / 16V
C304	21E06640S01	CER., 100pF
E304	23E21187S01	ELY., 10μF / 50V
C305	08E23758S01	POLY., 0.15μF
E305	23E21149S01	ELY., 47μF / 16V
C306	08E23758S01	POLY., 0.15μF
E306	23E21150S01	ELY., 22μF / 16V
C307	08E21461S01	CER., 10pF
C308	21E06640S01	CER., 100pF
E308	23E23751S01	ELY., 100μF / 50V
C309	08E21461S01	CER., 10pF
E309	23E21460S01	ELY., 0.47μF / 50V
C310	08E04860S02	CER., 270pF
E310	23E21460S01	ELY., 0.47μF / 50V
C311	21E07286S03	CER., 15pF
E311	23E21151S01	ELY., 2.2μF / 50V
C312	08E21991S01	CER., 1000pF
C313	08E23759S01	CER., 4.7pF
C314	08E23754S01	POLY., 0.01μF

Symbol No.	Part No.	Description
C315	08E21988S01	CER., 68pF
C316	08E21988S01	CER., 68pF
C317	08E23755S01	POLY., 0.047μF
C318	08E21461S01	CER., 10pF
C319	08E21461S01	CER., 10pF
E401	23E21187S01	ELY., 10μF / 50V
C402	08E21987S01	CER., 33pF
C403	08E21461S01	CER., 10pF
E403	23E20773S01	ELY., 10μF / 16V
C404	21E06640S01	CER., 100pF
E404	23E21187S01	ELY., 10μF / 50V
C405	08E23758S01	POLY., 0.15μF
E405	23E21149S01	ELY., 47μF / 16V
C406	08E23758S01	POLY., 0.15μF
E406	23E21150S01	ELY., 22μF / 16V
C407	08E21461S01	CER., 10pF
E408	23E23751S01	ELY., 100μF / 50V
C409	08E21461S01	CER., 10pF
E409	23E21460S01	ELY., 0.47μF / 50V
C410	08E04860S02	CER., 270pF
E410	23E21460S01	ELY., 0.47μF / 50V
C411	21E07286S03	CER., 15pF
E411	23E21151S01	ELY., 2.2μF / 50V
C412	08E21991S01	CER., 1000pF
C413	08E23759S01	CER., 4.7pF
C414	08E23754S01	POLY., 0.01μF
C415	08E21988S01	CER., 68pF
C416	08E21988S01	CER., 68pF
C417	08E23755S01	POLY., 0.047μF
C418	08E21461S01	CER., 10pF
C419	08E21461S01	CER., 10pF
C501	08E23758S01	POLY., 0.15μF
E501	23E20773S01	ELY., 10μF / 16V
C502	08E21991S01	CER., 1000pF
E502	23E20773S01	ELY., 10μF / 16V
C503	08E23754S01	POLY., 0.01μF
E503	23E20773S01	ELY., 10μF / 16V
C504	08E21991S01	CER., 1000pF
C505	08E23757S01	POLY., 0.1μF
E505	23E20773S01	ELY., 10μF / 16V
C506	08E23752S01	POLY., 1500pF
E506	23E21996S01	ELY., 220μF / 16V
C507	08E23753S01	POLY., 6800pF
E507	23E20800S01	ELY., 220μF / 10V
C508	08E23753S01	POLY., 6800pF
E508	23E20774S01	ELY., 100μF / 16V
C509	08E23755S01	POLY., 0.047μF
E509	23E22001S01	ELY., 3300μF / 16V
C510	08E23755S01	POLY., 0.047μF

Symbol No.	Part No.	Description
E510	23E22001S01	ELY., 3300μF / 16V
C511	08E23756S01	POLY., 0.056μF
E511	23E08302S01	ELY., 470μF / 35V
C512	08E23756S01	POLY., 0.056μF
E512	23E08302S01	ELY., 470μF / 35V
C513	08E23757S01	POLY., 0.1μF
E513	23E23813S01	ELY., 8200μF / 35V
C514	08E21990S01	CER., 180pF
E514	23E23813S01	ELY., 8200μF / 35V
E515	23E22188S01	ELY., 22μF / 50V
E516	23E22188S01	ELY., 22μF / 50V
E517	23E21996S01	ELY., 220μF / 16V
E518	23E21996S01	ELY., 220μF / 16V
E519	23E23772S01	ELY., 330μF / 50V
E520	23E23772S01	ELY., 330μF / 50V
E521	23E21994S01	ELY., 3.3μF / 50V
E522	23E20773S01	ELY., 10μF / 16V
C599	23E21997S01	ELY., (B.P) 100μF / 10V
C601	08E21991S01	CER., 1000pF

Resistors

(All resistors are chip 1/10W±5% unless otherwise noted.)

Symbol No.	Part No.	Description
R139	06E23812S01	M.F., 6.04K ohm 1/4W
R145	17E09460S01	Cement, 0.1 ohm 5W ×2
R146	06E21985S01	M.F., 10 ohm 1W
R147	06E08433S45	12K ohm
R239	06E23812S01	M.F., 6.04K ohm 1/4W
R245	17E09460S01	Cement, 0.1 ohm 5W ×2
R246	06E21985S01	M.F., 10 ohm 1W
R247	06E08433S45	12K ohm
R339	06E23812S01	M.F., 6.04K ohm 1/4W
R345	17E09460S01	Cement, 0.1 ohm 5W ×2
R346	06E21985S01	M.F., 10 ohm 1W
R347	06E08433S45	12K ohm
R439	06E23812S01	M.F., 6.04K ohm 1/4W
R445	17E09460S01	Cement, 0.1 ohm 5W ×2
R446	06E21985S01	M.F., 10 ohm 1W
R447	06E08433S45	12K ohm
R506	06E21981S01	7.5 ohm
R509	06E08433S29	100K ohm
R510	06E08433S07	4.7K ohm
R511	06E08433S29	100K ohm
R512	06E08433S44	2K ohm
R513	06E08433S44	2K ohm
R514	06E08433S29	100K ohm
R515	06E08433S55	680K ohm
R516	06E20117S01	1M ohm
R517	06E08433S03	1K ohm
R518	06E08433S03	1K ohm
R519	06E08433S03	1K ohm
R520	06E08433S21	3.3K ohm
R521	06E08433S03	1K ohm
R522	06E20498S01	470 ohm
R524	06E08433S65	20K ohm
R525	06E08433S25	5.6K ohm
R526	06E08433S12	22K ohm
R527	06E08433S26	220 ohm
R528	06E08433S10	10K ohm
R529	06E08433S10	10K ohm
R530	06E08433S74	510K ohm
R531	06E21980S01	240K ohm
R532	06E08433S69	510 ohm
R533	06E08433S07	4.7K ohm
R535	06E08433S51	11K ohm
R536	06E08433S16	2.4K ohm
R537	06E08433S29	100K ohm
R538	06E08433S73	62K ohm
R539	06E08433S10	10K ohm
R540	06E08433S11	18K ohm
R541	06E08433S19	10 ohm
R542	06E21986S01	M.F., 110 ohm 1W
R543	06E21986S01	M.F., 110 ohm 1W
R550	06E21985S01	M.F., 10 ohm 1W
R551	06E21985S01	M.F., 10 ohm 1W
VR101	18E23775S01	Volume, 50K ohm ×2 (GAIN)
VR102	18E23774S01	Volume, 20K ohm ×4 (CROSSOVER)
VR301	18E23775S01	Volume, 50K ohm ×2 (GAIN)
VR302	18E23774S01	Volume, 20K ohm ×4 (CROSSOVER)
VR501	18E21381S01	Variable, 10K ohm

Miscellaneous

Symbol No.	Part No.	Description
ET801	01E22007S01	POWER SUPPLY TERMINAL
ET802	09E23779S01	SPEAKER OUTPUT TERMINAL
F501	65E23826S01	Fuse, Auto 20A (For Battery Line)
F502	65E23826S01	Fuse, Auto 20A (For Battery Line)
JK801	09E23815S01	INPUT/PRE OUT RCA JACK
LD501	48E23780S01	LED, SEL2510C (GRN)

H

Exploded View

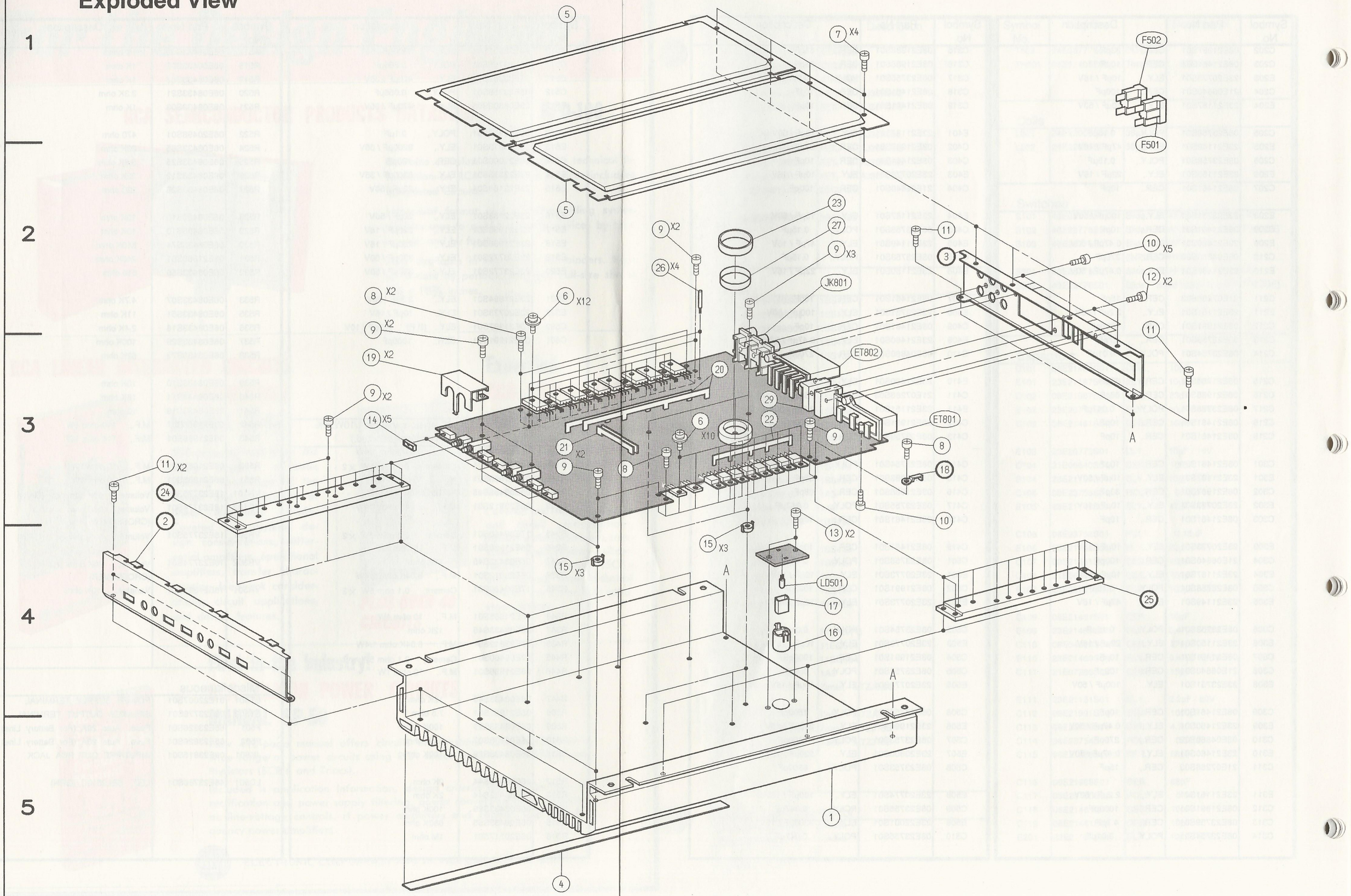

Cabinet Assembly Parts List

Symbol No.	Index	Part No.	Description
1	5-E	07E23810S01	Main Heat Sink
4	5-D	45E23808S01	Name Plate
5		15E22755S01	Cover, Bottom
6		03E08304S01	Screw, W/Double Washer (M3X8.5)
7	1-E	03E23802S01	Screw, Bind (M3X5)
8		03E08429S02	Screw, Bind (M3X6)
9		03E07234S01	Screw, Bind (M3X12)
10		03E23371S01	Screw, Pan (M3X8)
11		03E22345S01	Screw, Bind (M3X5)
12	2-G	03E07902S01	Screw, Pan (M2X6)
13	4-E	03E06492S02	Screw, Bind (M3X5)
14	3-C	15E21973S01	Cover, Switch
15	4-D	43E21451S01	Support P.C.Board
16	4-E	43E23804S01	Holder, LED
17	4-E	15E23809S01	Cover, LED
19	3-C	29E23806S01	Lag, GND
20	3-D	45E23807S01	Bus Bar (A)
21	3-D	45E22372S01	Bus Bar (JD)
22	3-E	45E22370S01	Bus Bar (2)
23	2-E	26A81610F02	Shield, Cu
26	2-D	09E21408S01	Lug, Style
27	2-E	26E23811S01	Sheet
29	3-E	43E23814S01	Holder, Fuse

NOTE:No parts number on parts list are not supplied.

Symbol No.	Index	Part No.	Description

Packing Assembly Parts List

Symbol No.		Part No.	Description
	101-1	03E22368S01	Screw, Tapping (M4 ×14)
	101-2	65E23826S01	Fuse, Auto 20A
○	102	68P80079W97	Owner's Manual
△	102	68P81402W38	Owner's Manual
□	102	68P81402W39	Owner's Manual
△	103-1	01E21979S01	Assy., Power Wire
□	103-1	01E21979S01	Assy., Power Wire

Symbol No.		Part No.	Description
△	103-2	28E21976S01	Remote Cord
□	103-2	28E21976S01	Remote Cord
□	103-3	01E22738S01	Assy., Speaker Wire

NOTE : ○ : For North American Model Only, △ : For General Foreign Model Only,
□ : For Japanese Model Only, Others : Common.
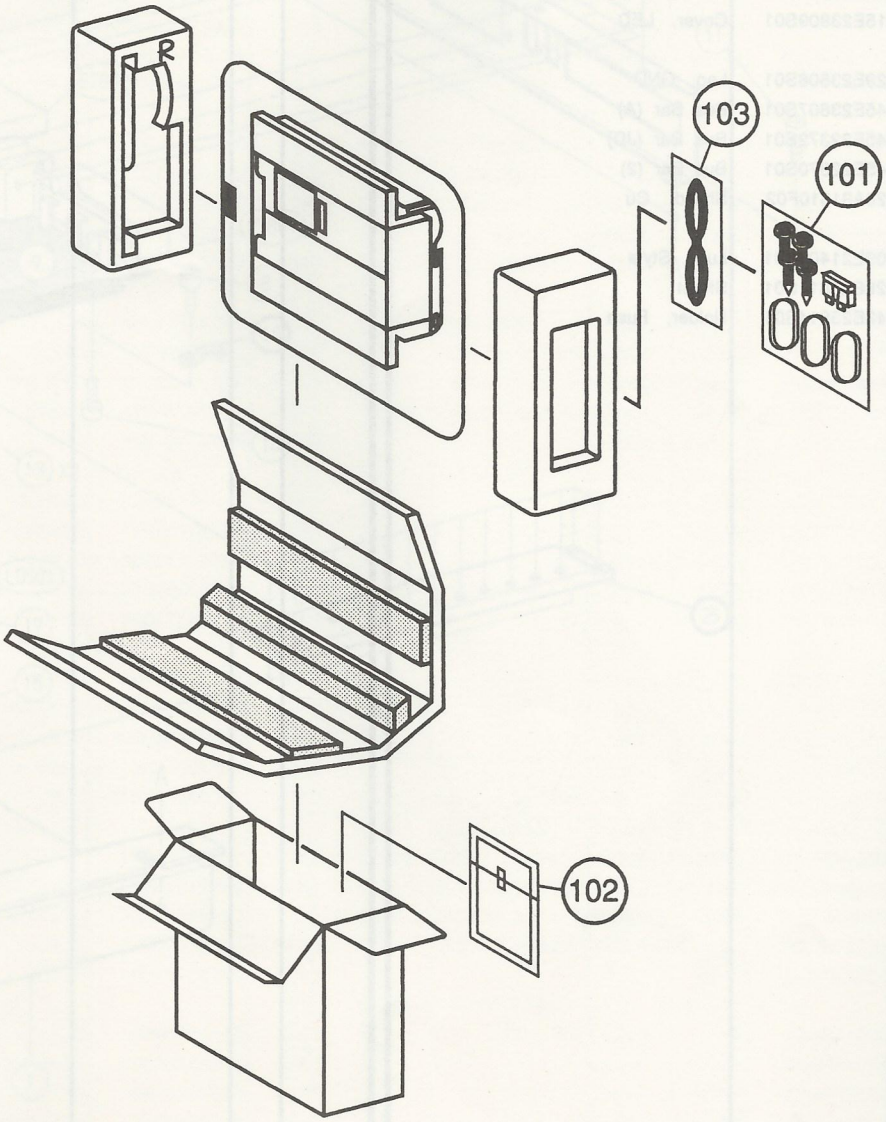
Packing Method View