MOTOROLA SERVICE MANUAL

72-60

AM CAR RADIO MODELS

112
114
122
124

Medium & Long Wavebands

MOTOROLA Automotive Products Ltd., Taylors Road, Stotfold, Hitchin, Herts.

Part No.68P41000H36 Tel. Hitchin 730661

CONTENTS

	Page
Servicing procedure	(i)
Models 112 114 122 124	1
Models 112—114 alignment procedures	2
112—114 component location	3
112 circuit diagram	4
p.c. board wiring	5
114 circuit diagram	6
p.c. board wiring	7
P.C. Board connexions	8
Models 122—124 alignment procedures	9
122 component location	10
124 component location	11
122 circuit diagram	12
p.c. board wiring	13
124 circuit diagram	14
p.c. board wiring	15
Replacement parts 112	16
114	17
122	19
124	20

SERVICING PROCEDURE

1. Before accepting defective in-guarantee radios for repair, ensure that the radio is within the twelve month guarantee period. The reinstallation of the receiver is customarily performed by the dealer and is not covered by this guarantee. Also the removal of engine noise, tyre static, electrical interference, faulty installation and aerial repairs are not considered as guarantee repairs, and therefore expenses relating to such services should be handled by the dealer.

2. Fill in Motorola Guarantee Labour Claim Form Service/6. and send the white and pink copies to Motorola Automotive Products Limited, Service Department, Taylors Road, Stotfold, Hitchin, Herts.

3. Retain the yellow copy of the Labour Claim Form for your file.

4. Defective parts for guarantee repairs should be returned for free replacement supported with the defective parts return label.

5. Only those Distributors or Service Stations authorised by Motorola can perform guarantee repairs on a no charge basis to the customer.

SERVICE NOTES

1. **RADIO POLARITY.** Proper polarity must be observed at the polarity reversing switch when connecting radio power leads. The radio will not operate and damage to the components will result if connected otherwise.

2. **POWER SUPPLY REQUIREMENTS.** It is preferable to use a storage battery (without a battery charger) in place of a battery eliminator. If a battery eliminator is used it must be well filtered and regulated.

3. **OUTPUT LOAD.** Always operate the receiver with an output load, either a 3 ohms speaker or a 3 ohms 5 watt resistive load.

4. **PUSH-BUTTON SET-UP.** (where applicable). To set push-buttons allow receiver to warm up for ten minutes. Pull push-button out to unlock. Push the push-button in firmly to lock after the station has been selected.

5. **TRANSISTOR REPLACEMENTS.** When replacing a transistor other than a power type transistor, grasp the transistor leads between transistor body and the P.C. board with a pair of long-nosed pliers to prevent excessive heating of transistor body during soldering operation.

6. **POWER TRANSISTOR REPLACEMENT.** When replacing a power type transistor be sure to :
(a) Use the transistor specified in the replacement parts list.
(b) Coat both sides of the transistor insulator with a silicon grease to ensure proper heat dissipation.
(c) Securely and evenly tighten the transistor mounting screw.

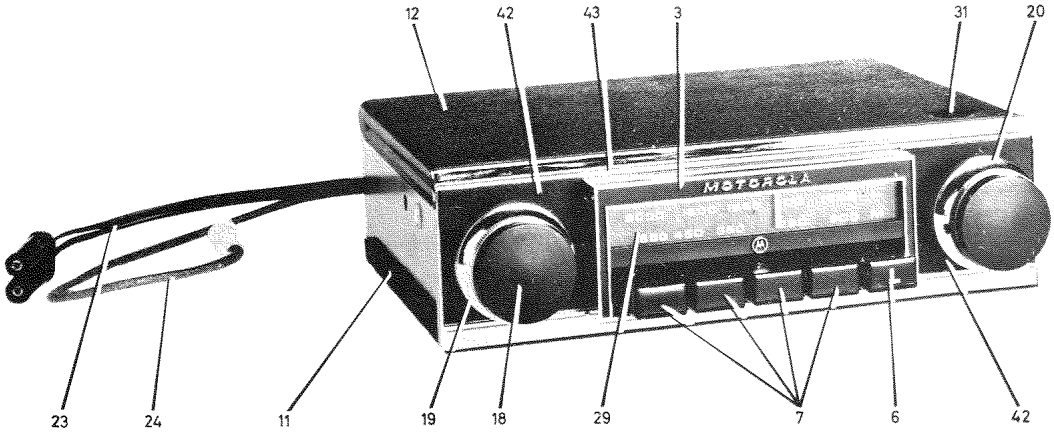

FIG. 1 MODEL 112

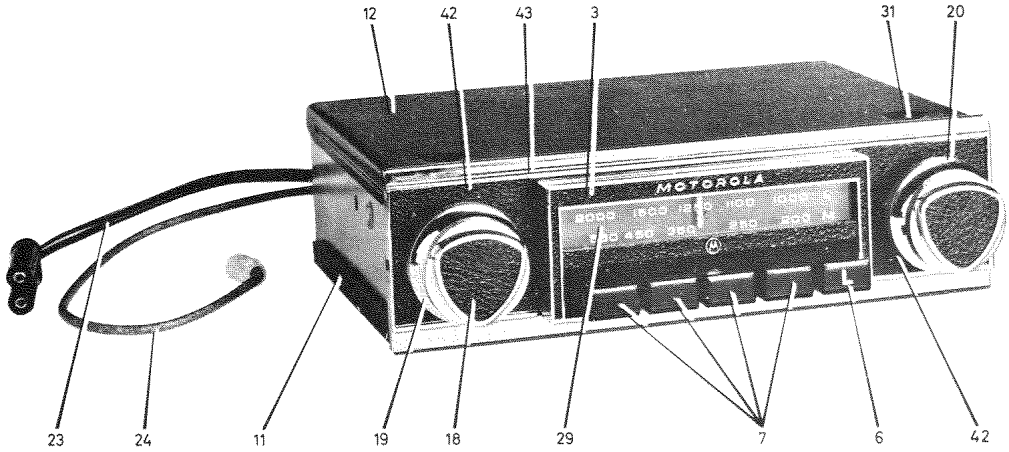

FIG. 2 MODEL 114

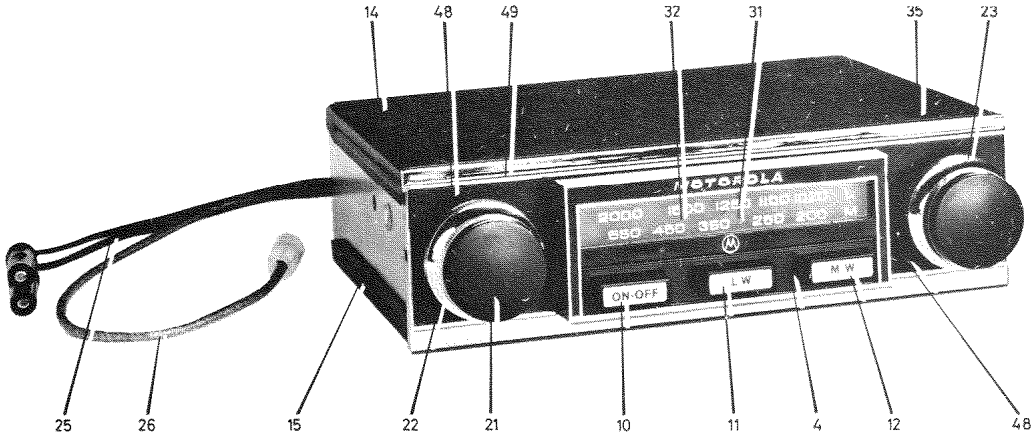

FIG. 3 MODEL 122

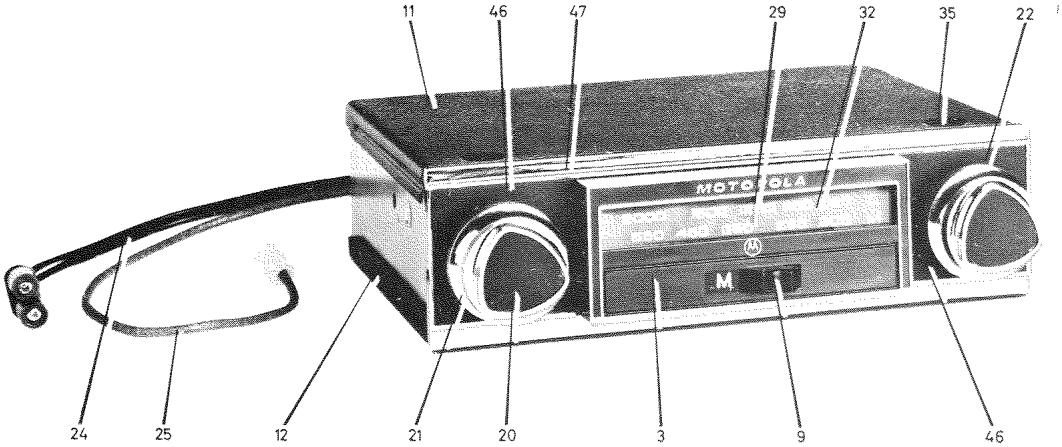

FIG. 4 MODEL 124

Note: See relevant mechanical parts list for details of annotated part numbers.

RECEIVER ALIGNMENT

Connect a meter across the loudspeaker coil. Set volume control to maximum and tone control to treble. Attenuate the signal generator output to maintain 1.73 volts (1 watt across a 3 ohm load) on a voltmeter at all times to prevent receiver overloading.

STEP	SIGNAL GENERATOR CONNECTION	GENERATOR FREQUENCY (400HZ. MOD.)	TUNER SET TO	ADJUST	REMARKS
I.F. ALIGNMENT—SWITCH TO MEDIUM WAVEBAND					
1	Aerial socket via 0.1mf	470Khz	High frequency end stop	T1 and T2	Adjust for maximum
R.F. ALIGNMENT					
2	Aerial socket via dummy aerial	1620Khz	High frequency end stop	C7B, C7A, C1	Adjust for maximum
SWITCH TO LONG WAVEBAND					
3	Aerial socket via dummy aerial	310Khz	High frequency end stop	L7	Adjust for maximum
4	Aerial socket via dummy aerial	225Khz	Tune receiver for maximum output	L4, L3	Adjust for maximum
5	Repeat Steps 3 and 4				
FINAL AERIAL TRIMMER ADJUSTMENT					
6			Weak station around 1500Khz	C1	Adjust for maximum with radio installed in car and aerial fully extended

TO CALIBRATE POINTER—Tune radio to a 1200 kHz signal and bend pointer until centre of pointer coincides with the 5 of the 250M marking on the scale.

THE TUNER—The tuner is calibrated at the factory and re-adjustment is not recommended.

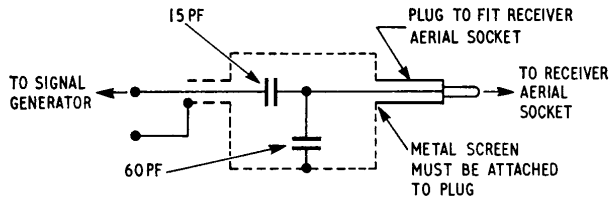

DUMMY AERIAL DETAIL

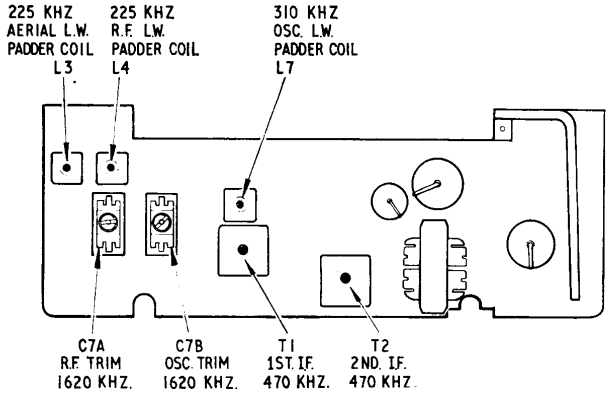

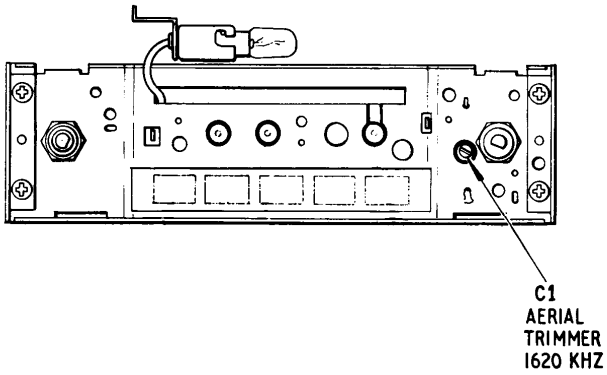

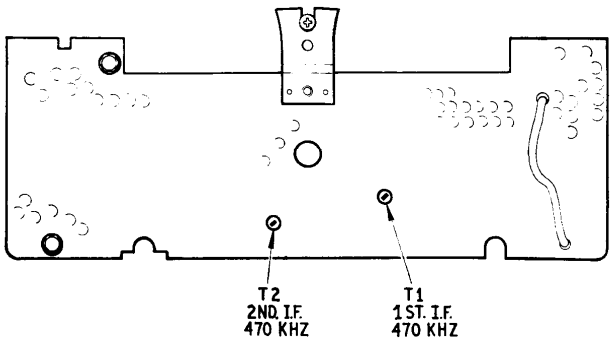

FIG. 5 MODELS 112 AND 114. ALIGNMENT TABLE AND LOCATION DIAGRAMS

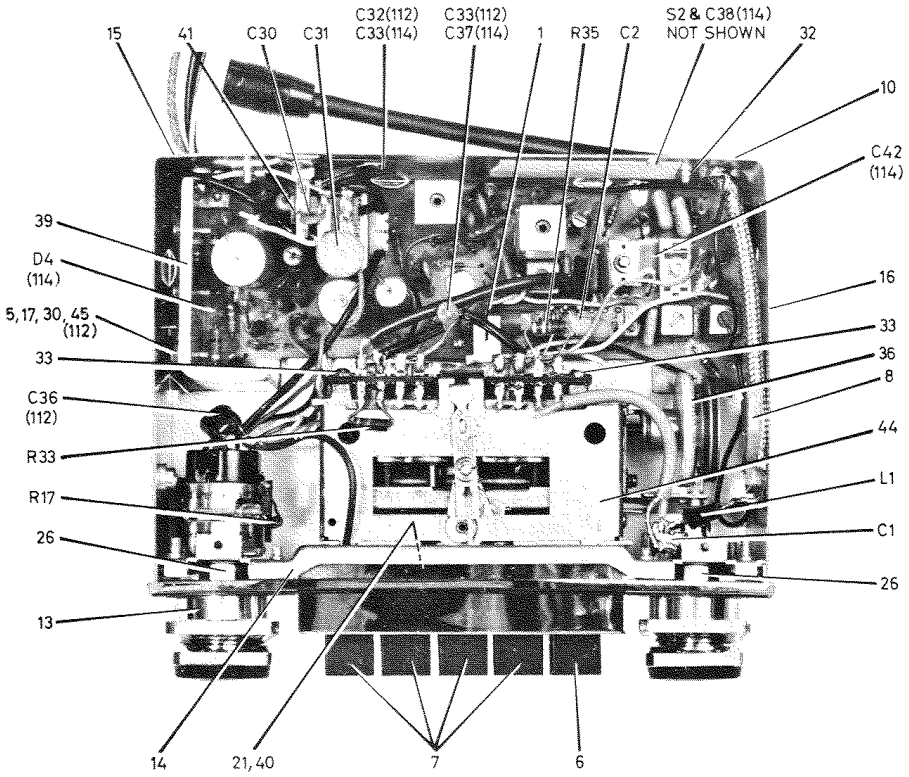

TOP VIEW

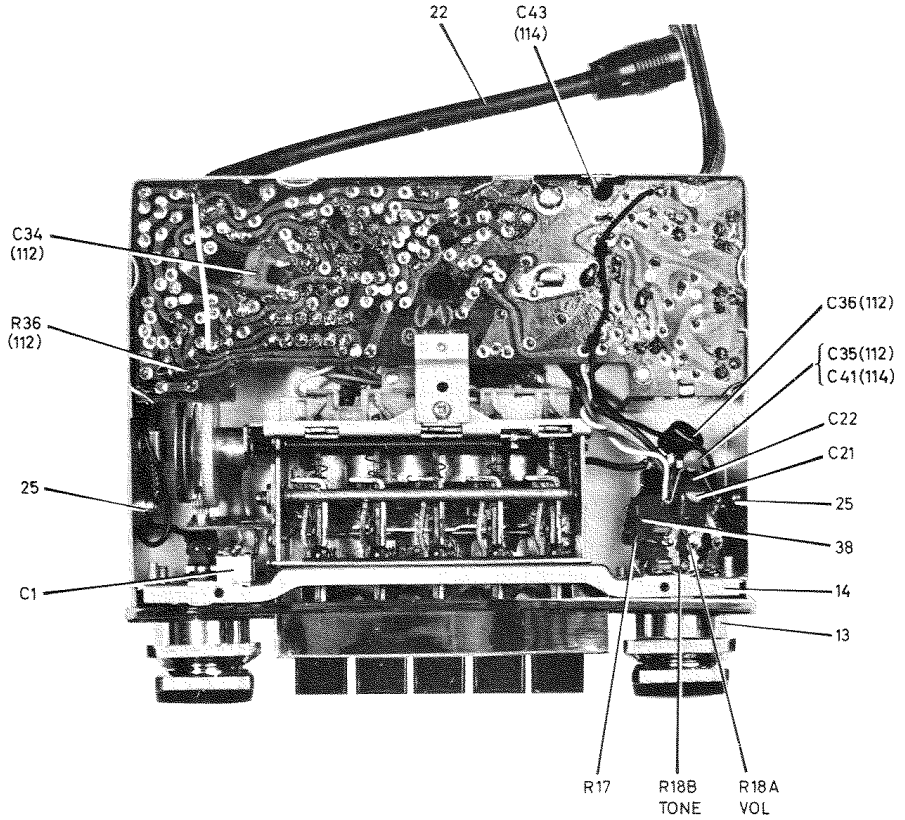

UNDERSIDE VIEW

FIG. 6 MODEL 112-114 COMPONENT LOCATION

PRINTED CIRCUIT REFERENCE SYSTEM :-

ALL TEST POINTS ACCESSIBLE ON THE WIRING SIDE OF THE P.C. BOARD ARE CROSS REFERENCED TO THE CIRCUIT DIAGRAM BY THE CIRCLED REFERENCE NUMBERS.

FOR EXAMPLE, TO CHECK THE VOLTAGE AT THE BASE OF TX6:-

1. LOCATE TX6 BASE ON THE CIRCUIT DIAGRAM.
2. CHECK THE REFERENCE NUMBER ON THE CIRCUIT DIAGRAM I.E. 24
3. LOCATE THE SAME REFERENCE NUMBER ON THE P.C. BOARD WIRING DIAGRAM.

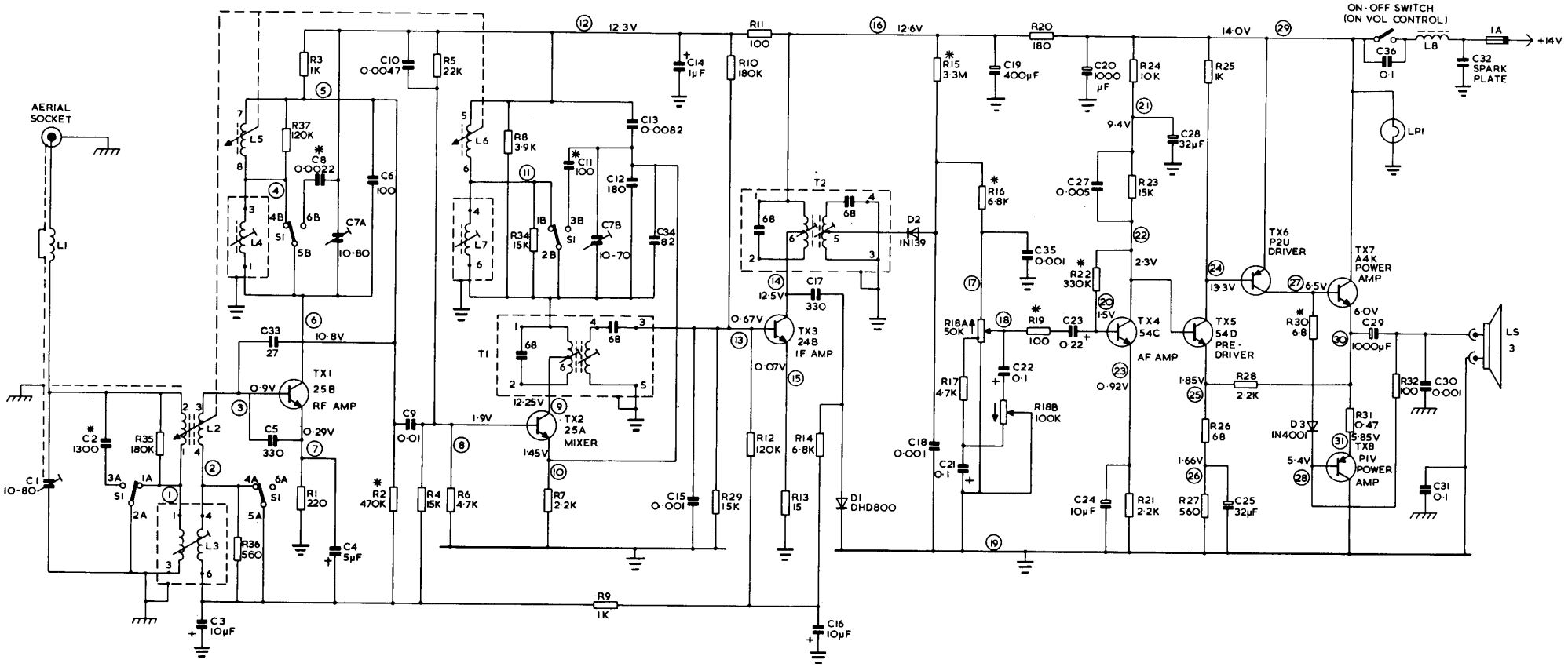

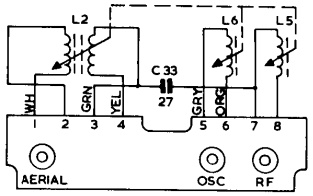

REAR VIEW OF TUNER SHOWING L2, L5 AND L6 CONNECTIONS

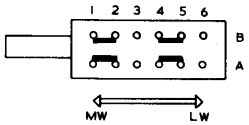

WAVECHANGE SWITCH S1 TOP VIEW SHOWN IN MW POSITION

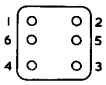

BOTTOM VIEW T1, T2

BOTTOM VIEW L3, L4, L7

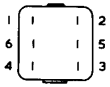

ALTERNATIVE BOTTOM VIEW T1, T2

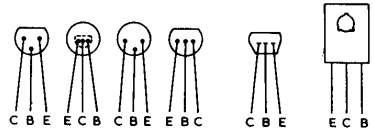

ALTERNATIVE TRANSISTOR BASES TX1 - TX5

TX6

TX7 & TX8 VIEWED FROM THE FRONT

ISOLATED NEGATIVE LINE

OUTER CASING

ARROW INDICATES CLOCKWISE ROTATION OF SPINDLE

NOTE:-

1. CAPACITORS - UNLESS OTHERWISE STATED - DECIMAL VALUES LESS THAN 1 ARE IN µF AND ALL OTHER VALUES ARE IN pF.
2. * - EXACT VALUE TO BE DETERMINED BY PRODUCTION PROCESS. REPLACE WITH THE SAME VALUE OF ORIGINAL PART.
3. COMPONENT LIST:-
   C1 - C25 L1 - L8 R1 - R32
   C27 - C36 R34 - R37

FIG. 7 MODEL 112 CIRCUIT DIAGRAM

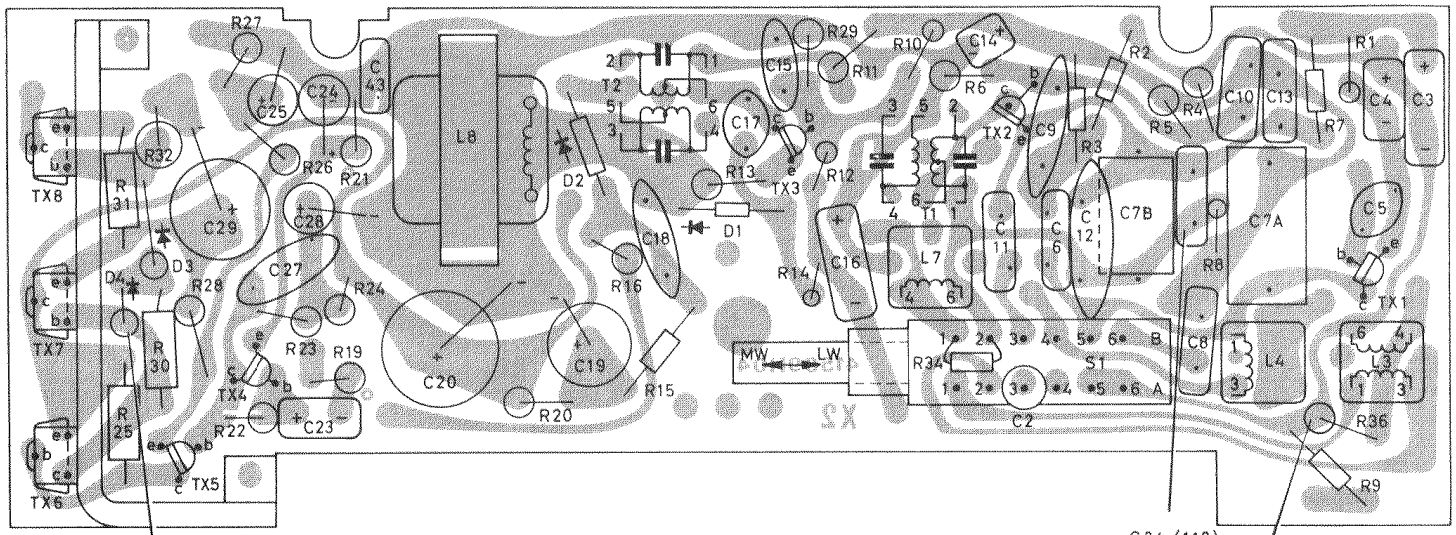

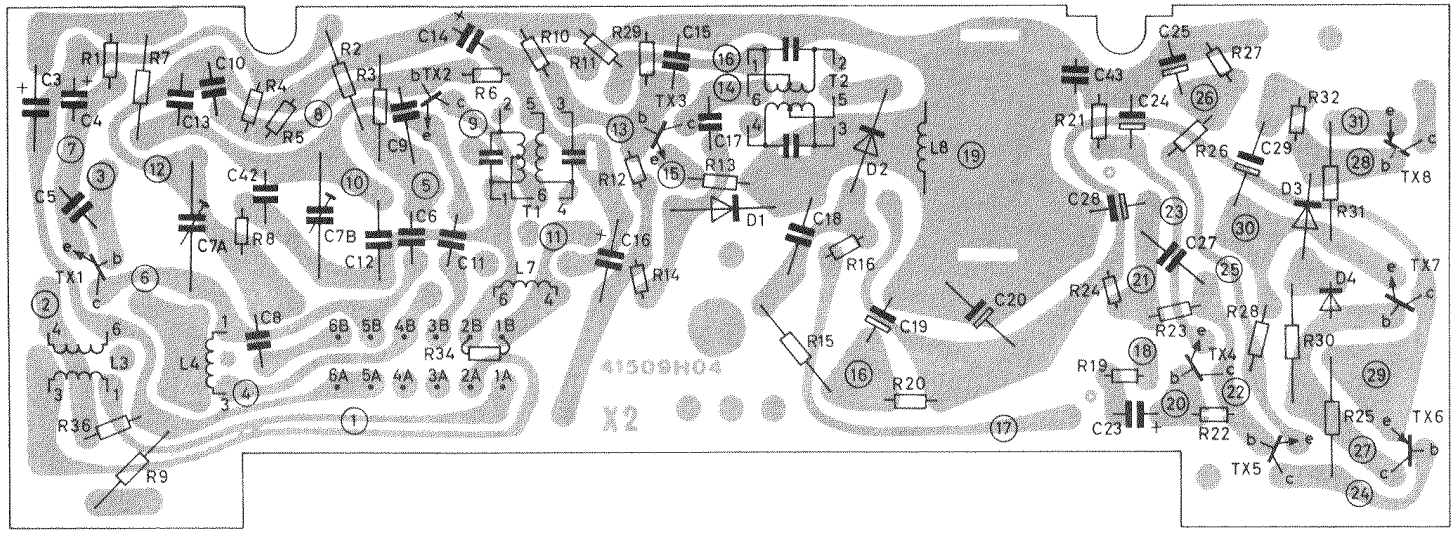

SEE NOTE 'PRINTED CIRCUIT REFERENCE SYSTEM' ON CIRCUIT DIAGRAM.

WIRING SIDE

FIG. 8 PRINTED CIRCUIT BOARD COMPONENTS

PRINTED CIRCUIT REFERENCE SYSTEM :-

ALL TEST POINTS ACCESSIBLE ON THE WIRING SIDE OF THE P.C. BOARD ARE CROSS REFERENCED TO THE CIRCUIT DIAGRAM BY THE CIRCLED REFERENCE NUMBERS.

FOR EXAMPLE, TO CHECK THE VOLTAGE AT THE BASE OF TX6 :-

1. LOCATE TX6 BASE ON THE CIRCUIT DIAGRAM.
2. CHECK THE REFERENCE NUMBER ON THE CIRCUIT DIAGRAM I.E. 24
3. LOCATE THE SAME REFERENCE NUMBER ON THE P.C. BOARD WIRING DIAGRAM.

CAUTION :- OBSERVE PROPER POLARITY ON POLARITY REVERSING SWITCH AND WHEN CONNECTING RADIO POWER LEADS. RADIO WILL NOT OPERATE AND DAMAGE TO COMPONENTS WILL RESULT IF CONNECTED OTHERWISE.

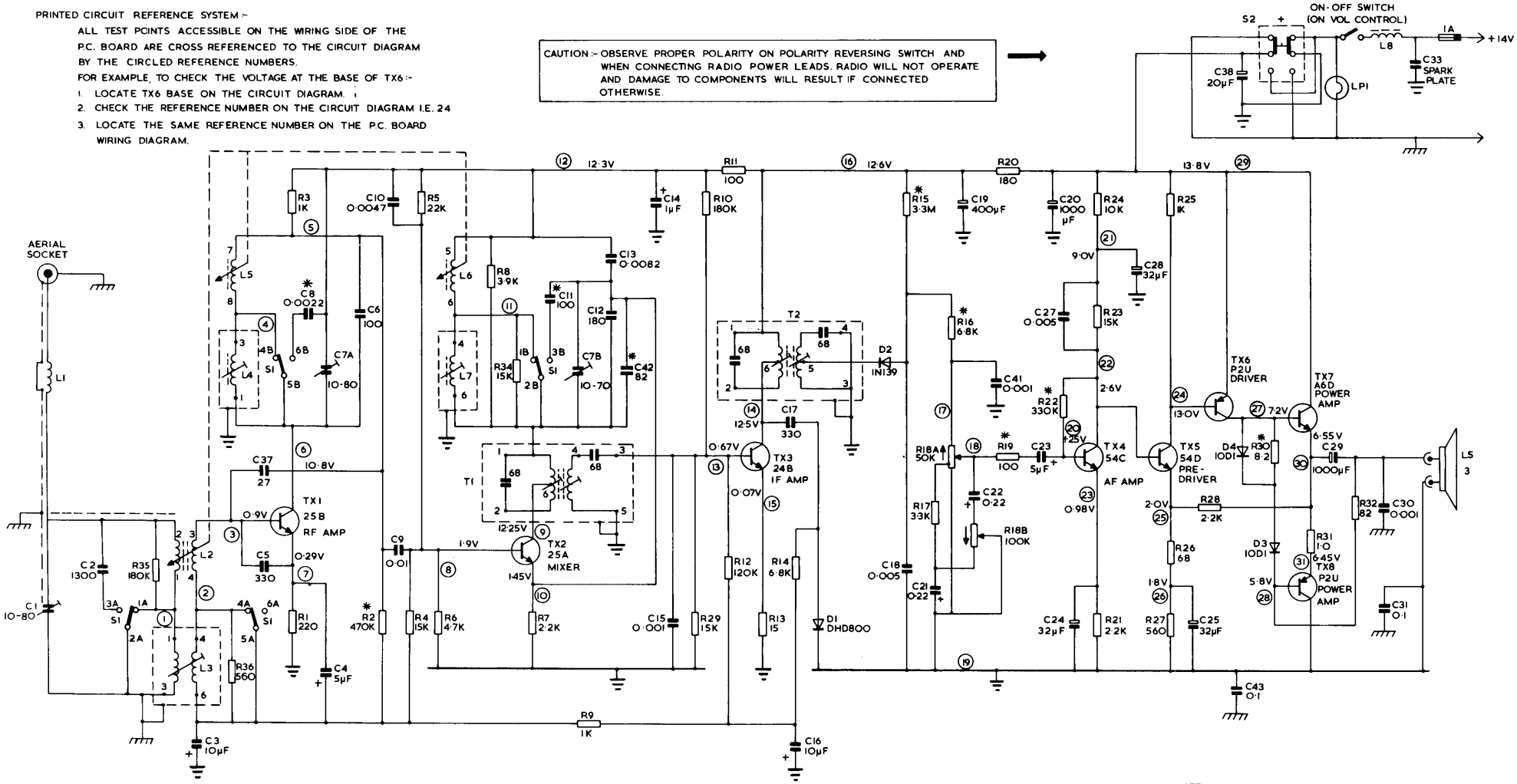

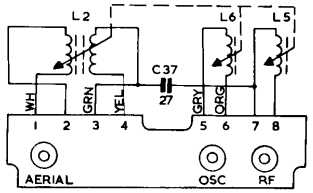

REAR VIEW OF TUNER SHOWING L2, L5 AND L6 CONNECTIONS

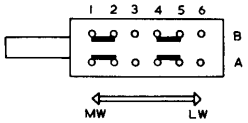

WAVECHANGE SWITCH S1 TOP VIEW SHOWN IN MW POSITION

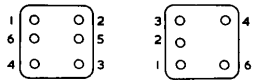

BOTTOM VIEW T1, T2

BOTTOM VIEW L3, L4, L7

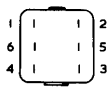

ALTERNATIVE BOTTOM VIEW T1, T2

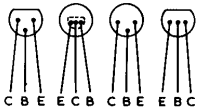

ALTERNATIVE TRANSISTOR BASES TX1 - TX5

TX6 TX7 TX8

ISOLATED NEGATIVE LINE

OUTER CASING

ARROW INDICATES CLOCKWISE ROTATION OF SPINDLE

NOTE:-

1. CAPACITORS - UNLESS OTHERWISE STATED - DECIMAL VALUES LESS THAN 1 ARE IN µF AND ALL OTHER VALUES ARE IN pF.
2. * - EXACT VALUE TO BE DETERMINED BY PRODUCTION PROCESS. REPLACE WITH THE SAME VALUE OF ORIGINAL PART.
3. COMPONENT LIST:-

C1 - C25, C27 - C31, C33, C37 - C38, C41 - C43
L1 - L8
R1 - R32, R34 - R36

FIG. 9 MODEL 114 CIRCUIT DIAGRAM

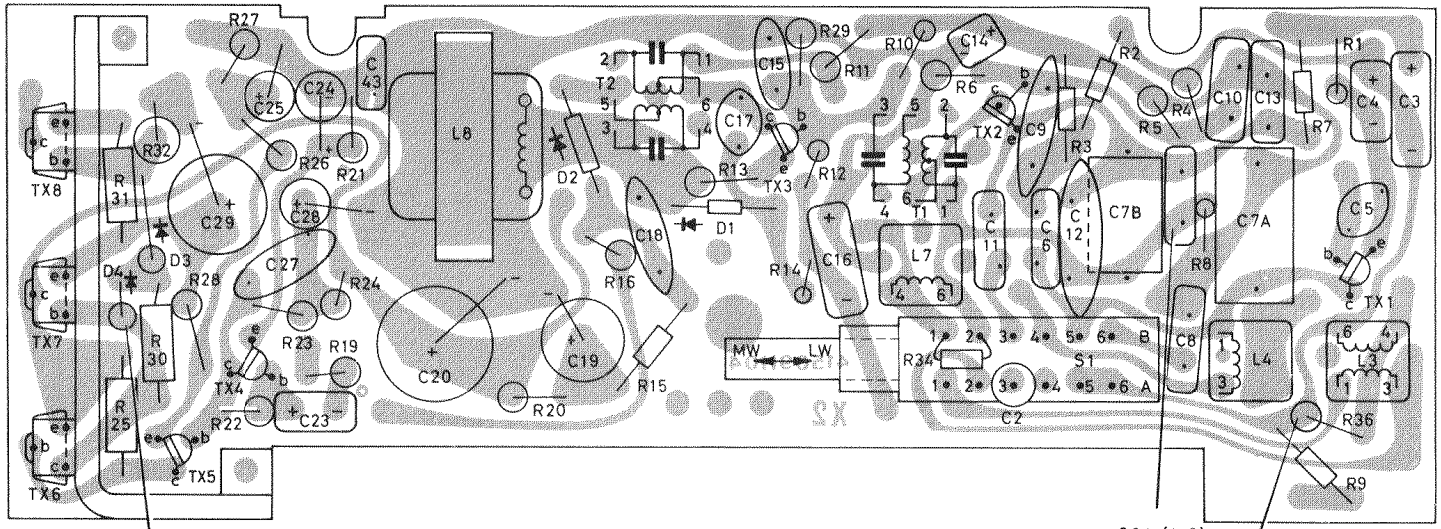

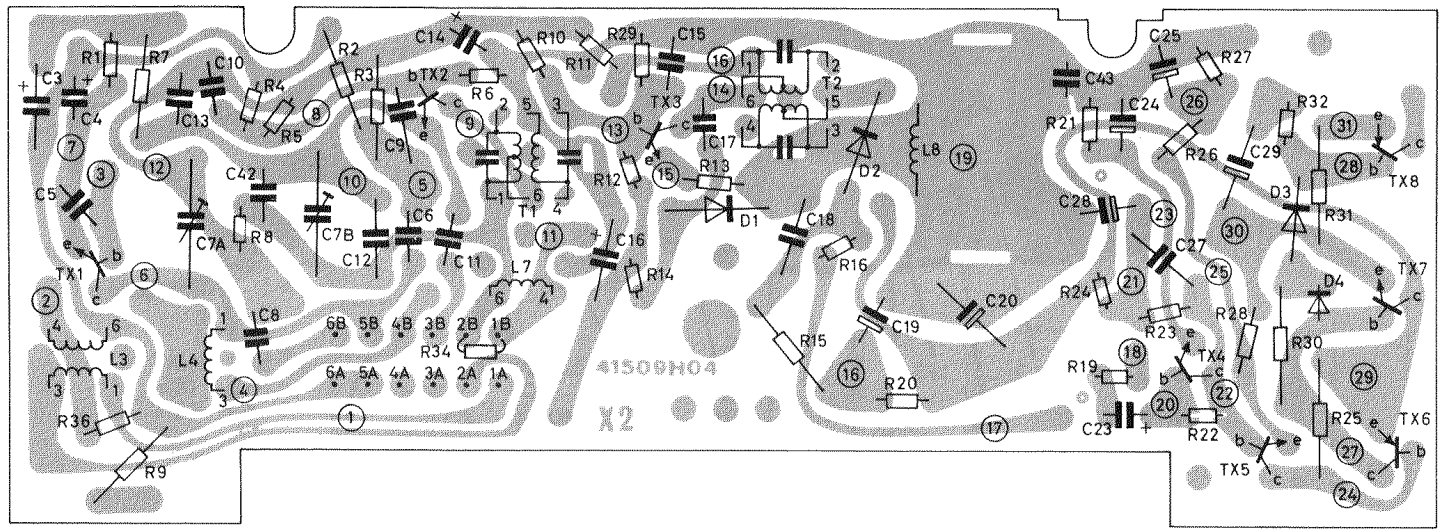

SEE NOTE 'PRINTED CIRCUIT REFERENCE SYSTEM' ON CIRCUIT DIAGRAM.

WIRING SIDE

FIG. 10 PRINTED CIRCUIT BOARD COMPONENTS

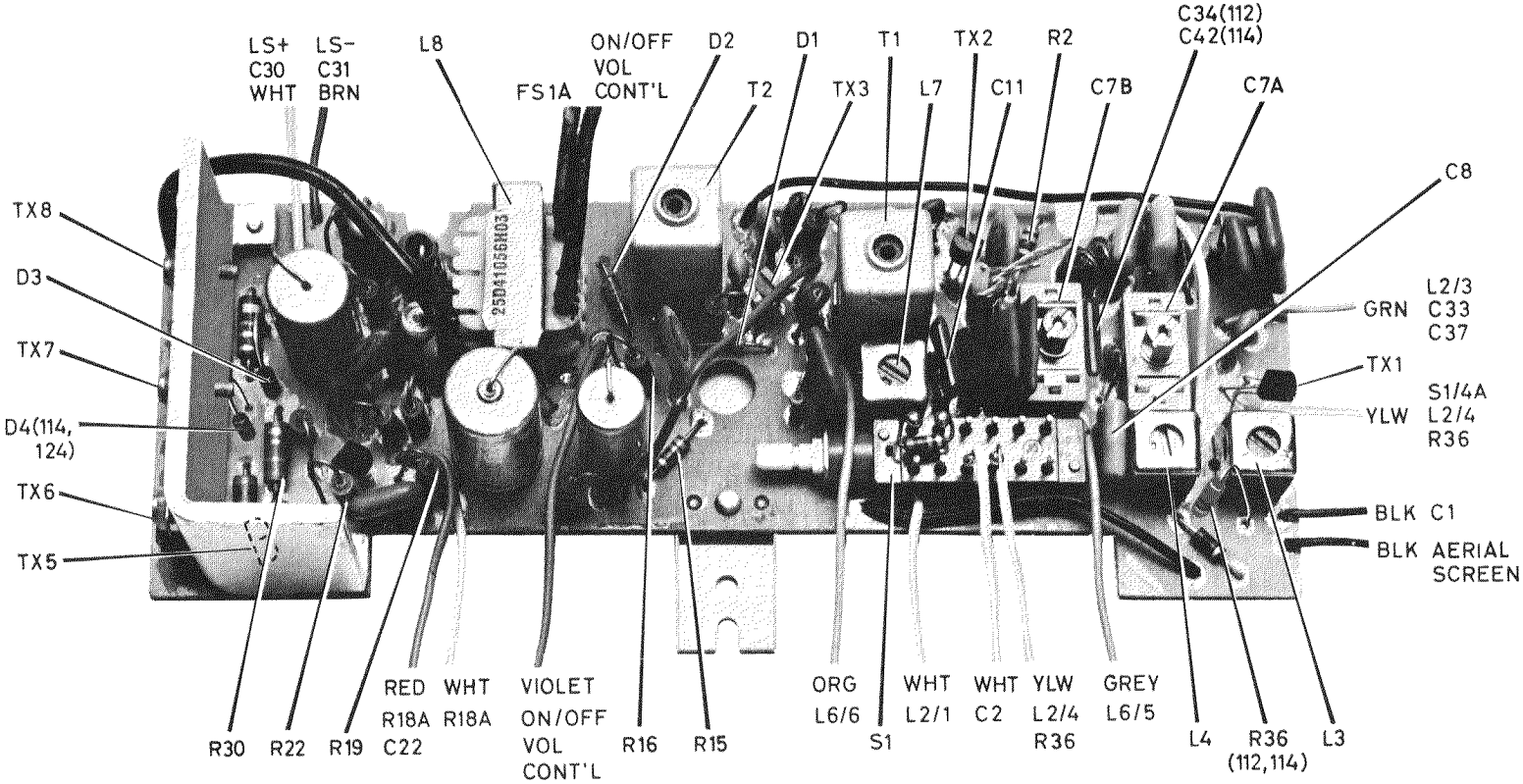

FIG. 11 PRINTED CIRCUIT BOARD CONNEXIONS

RECEIVER ALIGNMENT

Connect a voltmeter across the loudspeaker coil. Set volume control to maximum and tone control to treble. Attenuate the signal generator output to maintain 1.73 volts (1 watt across a 3 ohm load) on the voltmeter at all times to prevent receiver overloading.

STEP	SIGNAL GENERATOR CONNECTION	GENERATOR FREQUENCY (400HZ. MOD.)	TUNER SET TO	ADJUST	REMARKS
I.F. ALIGNMENT—SWITCH TO MEDIUM WAVEBAND					
1	Aerial socket via 0.1mf	470Khz	High frequency end stop	T1 and T2	Adjust for maximum
R.F. ALIGNMENT					
2	Aerial socket via dummy aerial	1620Khz	High frequency end stop	C7B, C7A, C1	Adjust for maximum
SWITCH TO LONG WAVEBAND					
3	Aerial socket via dummy aerial	145Khz	Low frequency end stop	L7	Adjust for maximum
4	Aerial socket via dummy aerial	180Khz	Tune receiver for maximum output	L4, L3	Adjust for maximum
5	Repeat Steps 3 and 4 until there is no further increase. Step 4 should be the last step.				
FINAL AERIAL TRIMMER ADJUSTMENT					
6			Weak station around 1400Khz	C1	Adjust for maximum with radio installed in car and aerial fully extended

TO CALIBRATE POINTER—Tune radio to a 1500Khz signal and set pointer to coincide with the centre of the 200M marking on the scale.

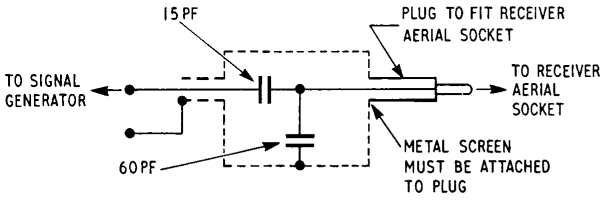

DUMMY AERIAL DETAIL

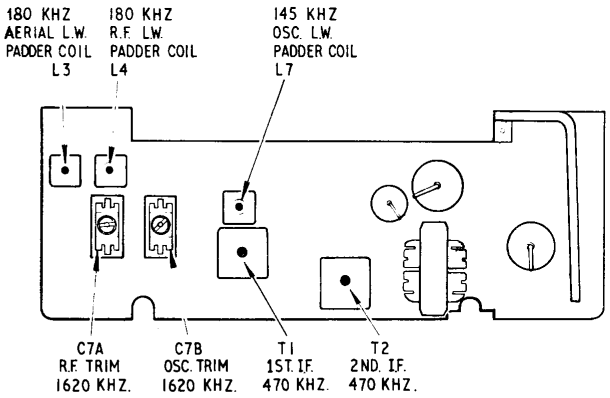

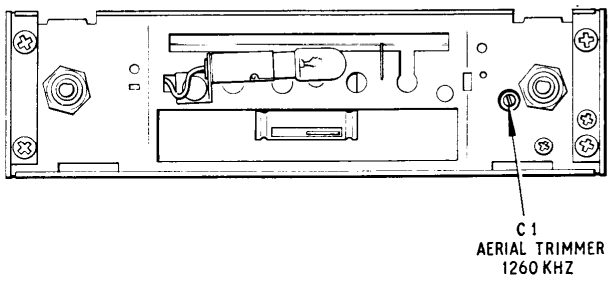

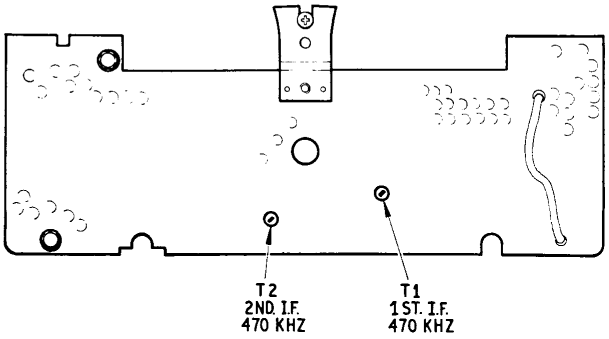

FIG. 12 MODELS 122 AND 124 ALIGNMENT TABLE AND LOCATION DIAGRAMS

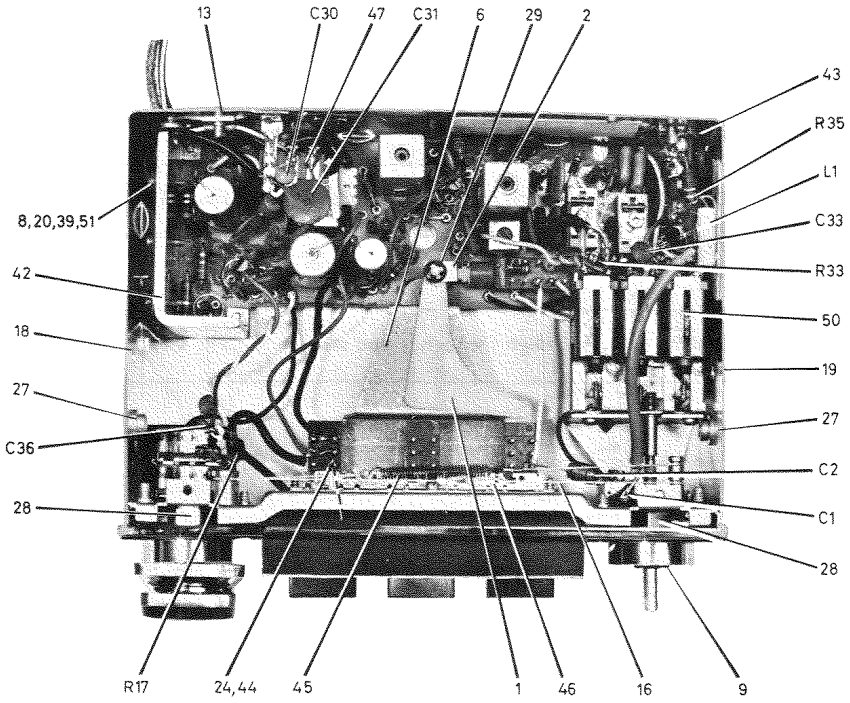

TOP VIEW

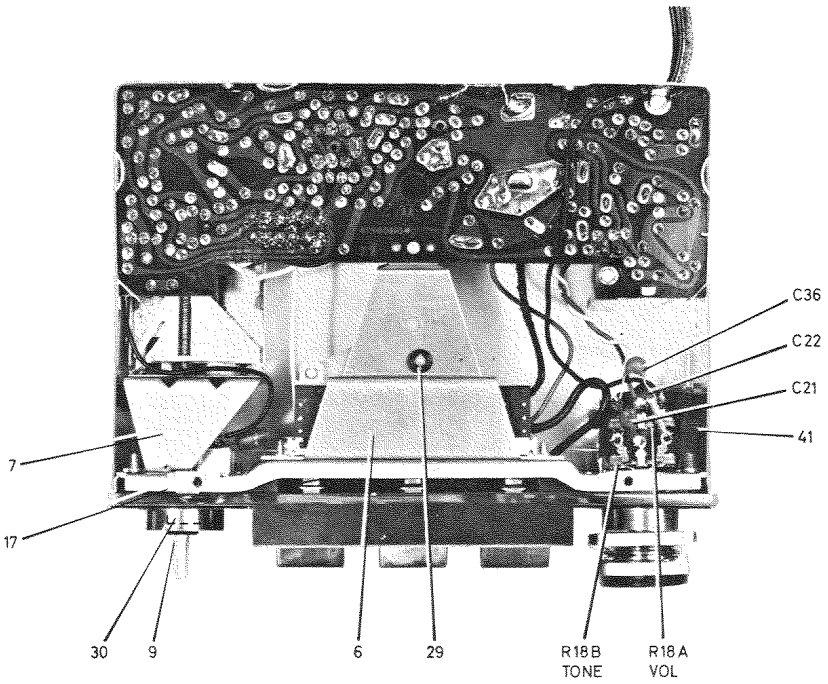

UNDERSIDE VIEW

FIG. 13 MODEL 122 COMPONENT LOCATION

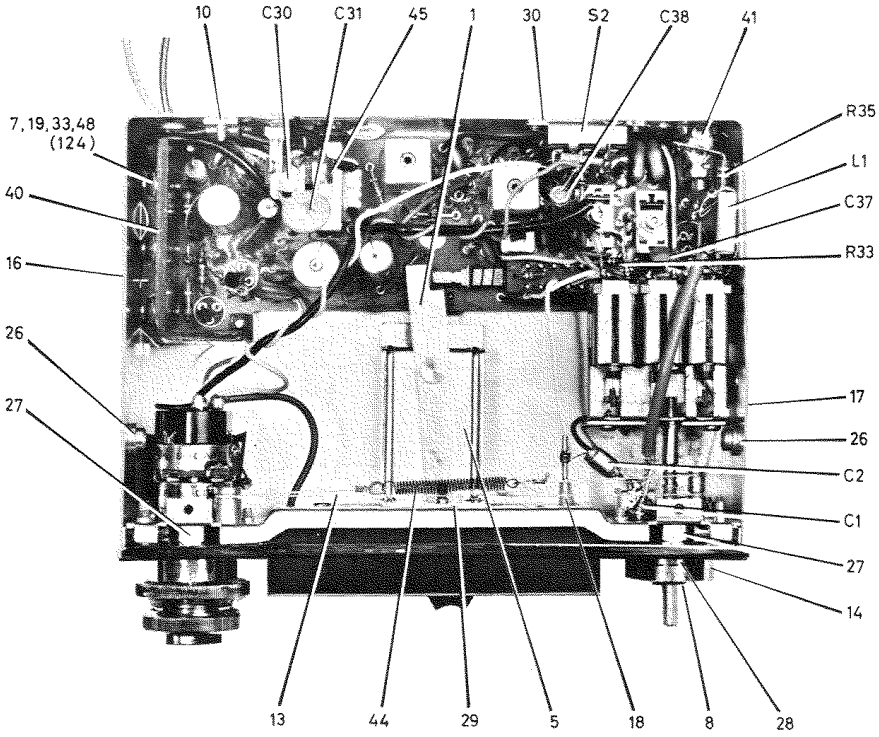

TOP VIEW

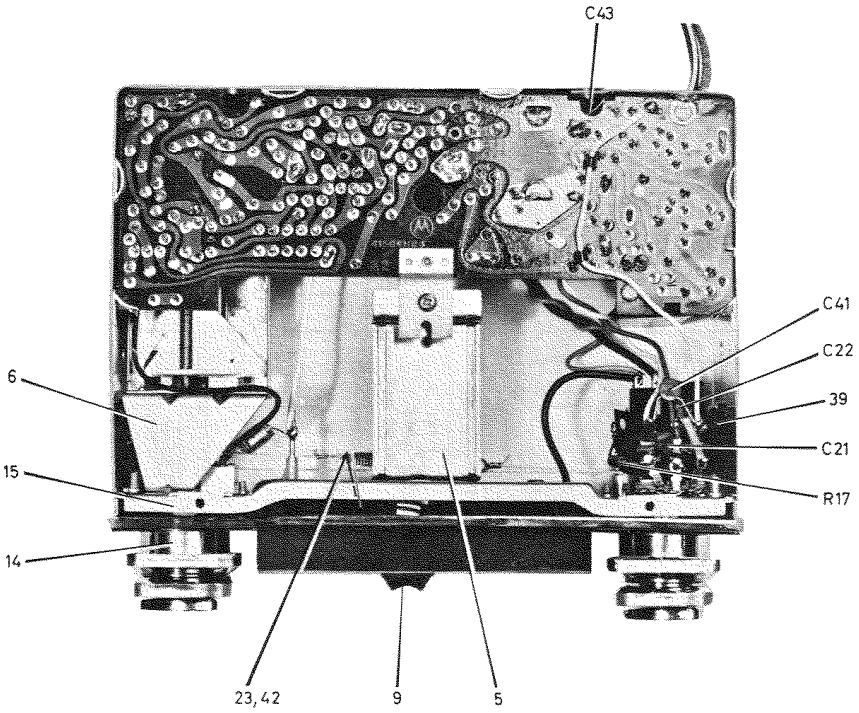

UNDERSIDE VIEW

FIG. 14 MODEL 124 COMPONENT LOCATION

PRINTED CIRCUIT REFERENCE SYSTEM :-

ALL TEST POINTS ACCESSIBLE ON THE WIRING SIDE OF THE P.C. BOARD ARE CROSS REFERENCED TO THE CIRCUIT DIAGRAM BY THE CIRCLED REFERENCE NUMBERS.

FOR EXAMPLE, TO CHECK THE VOLTAGE AT THE BASE OF TX6 :-

1. LOCATE TX6 BASE ON THE CIRCUIT DIAGRAM.
2. CHECK THE REFERENCE NUMBER ON THE CIRCUIT DIAGRAM I.E. 24
3. LOCATE THE SAME REFERENCE NUMBER ON THE P.C. BOARD WIRING DIAGRAM.

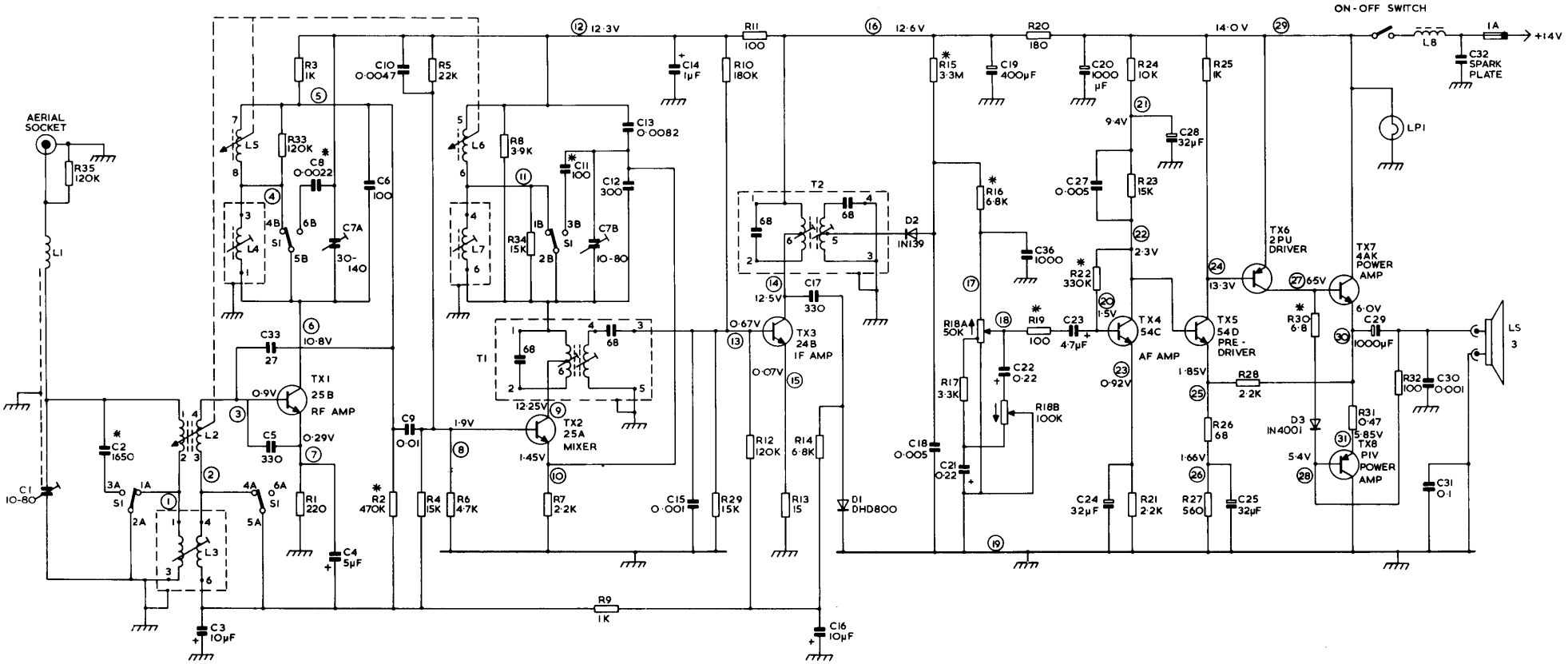

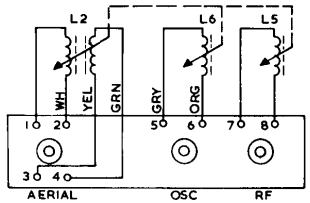

REAR VIEW OF TUNER SHOWING L2, L5 AND L6 CONNECTIONS

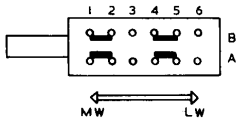

WAVECHANGE SWITCH S1 TOP VIEW SHOWN IN MW POSITION

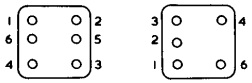

BOTTOM VIEW T1, T2

BOTTOM VIEW L3, L4, L7

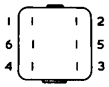

ALTERNATIVE BOTTOM VIEW T1, T2

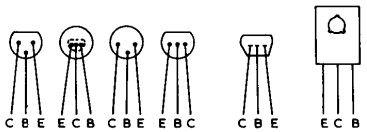

ALTERNATIVE TRANSISTOR BASES TX1 - TX5

TX6

TX7 & TX8 VIEWED FROM THE FRONT

OUTER CASING

ARROW INDICATES CLOCKWISE ROTATION OF SPINDLE

NOTE:-

1. CAPACITORS - UNLESS OTHERWISE STATED - DECIMAL VALUES LESS THAN 1 ARE IN µF AND ALL OTHER VALUES ARE IN pF.
2. * - EXACT VALUE TO BE DETERMINED BY PRODUCTION PROCESS. REPLACE WITH THE SAME VALUE OF ORIGINAL PART.
3. COMPONENT LIST :-

C1 - C25 L1 - L8 R1 - R35
C27 - C33
C36

FIG. 15 MODEL 122 CIRCUIT DIAGRAM

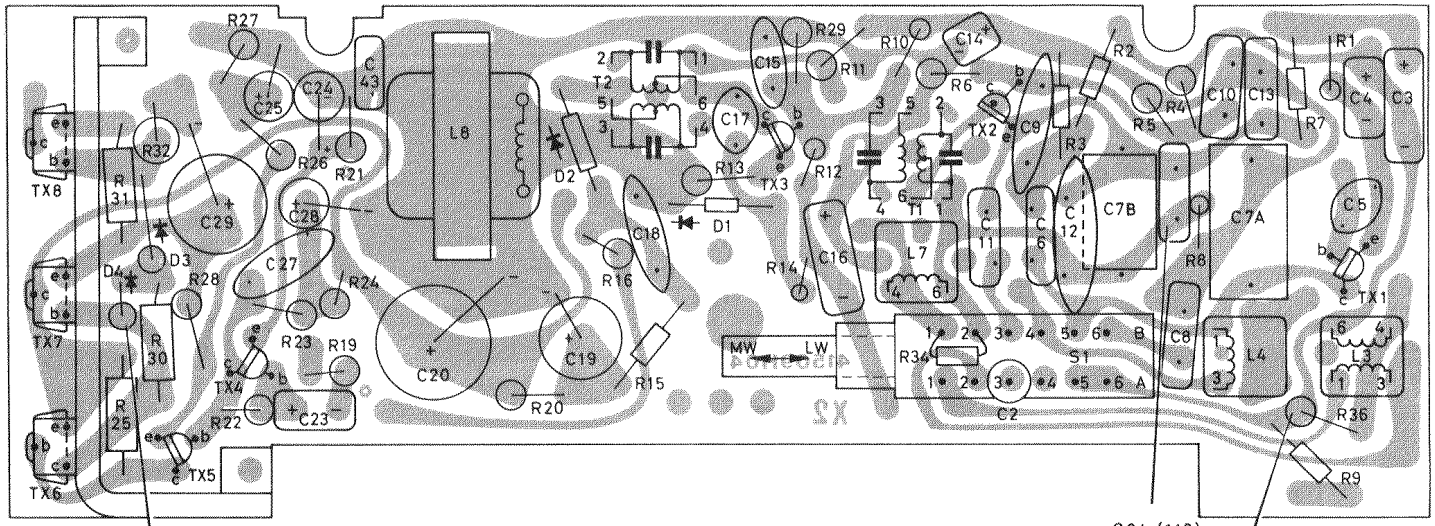

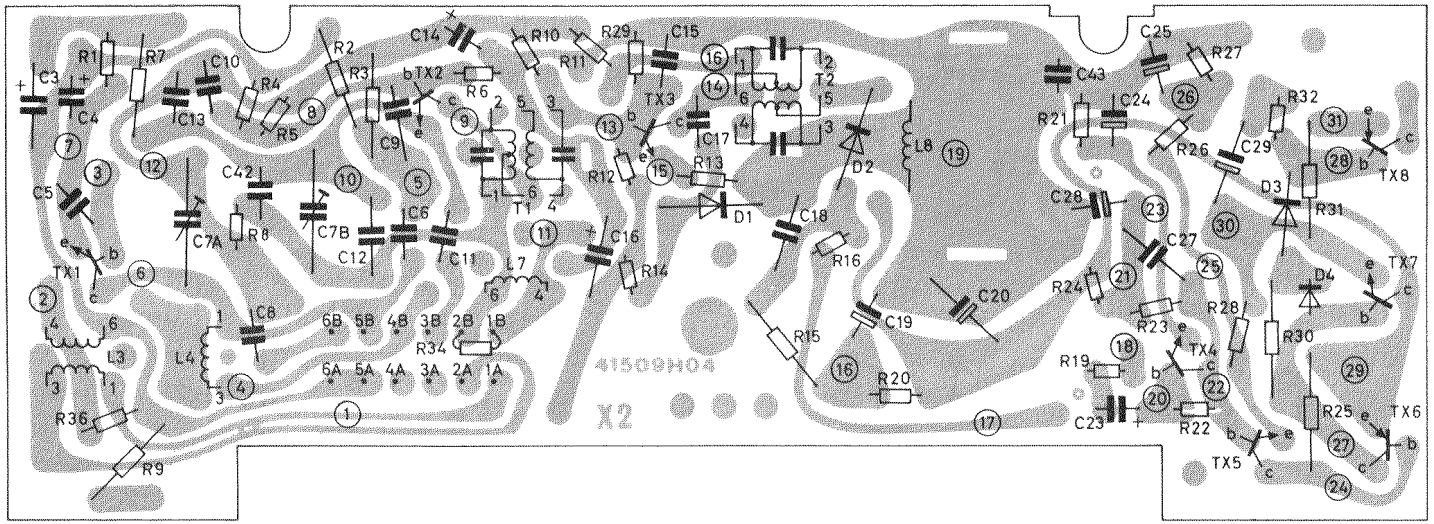

SEE NOTE 'PRINTED CIRCUIT REFERENCE SYSTEM' ON CIRCUIT DIAGRAM.

WIRING SIDE

FIG. 16 PRINTED CIRCUIT BOARD COMPONENTS

PRINTED CIRCUIT REFERENCE SYSTEM :-

ALL TEST POINTS ACCESSIBLE ON THE WIRING SIDE OF THE P.C. BOARD ARE CROSS REFERENCED TO THE CIRCUIT DIAGRAM BY THE CIRCLED REFERENCE NUMBERS.

FOR EXAMPLE, TO CHECK THE VOLTAGE AT THE BASE OF TX6:-

1. LOCATE TX6 BASE ON THE CIRCUIT DIAGRAM.
2. CHECK THE REFERENCE NUMBER ON THE CIRCUIT DIAGRAM I.E. 24
3. LOCATE THE SAME REFERENCE NUMBER ON THE P.C. BOARD WIRING DIAGRAM.

CAUTION :- OBSERVE PROPER POLARITY ON POLARITY REVERSING SWITCH AND WHEN CONNECTING RADIO POWER LEADS, RADIO WILL NOT OPERATE AND DAMAGE TO COMPONENTS WILL RESULT IF CONNECTED OTHERWISE.

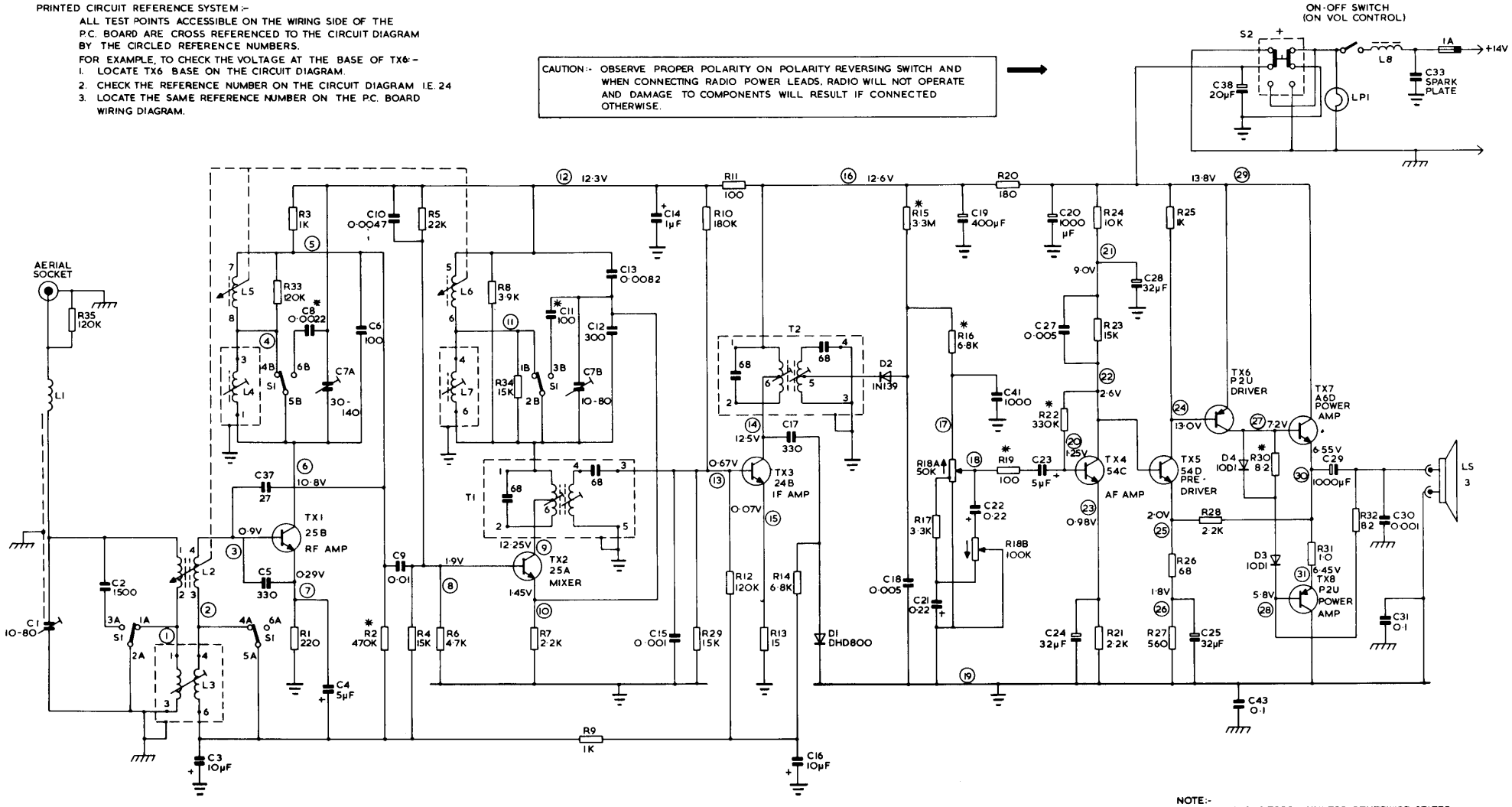

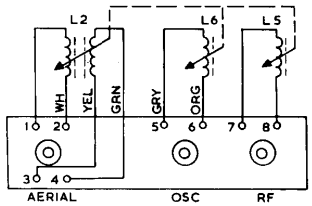

REAR VIEW OF TUNER SHOWING L2, L5 AND L6 CONNECTIONS

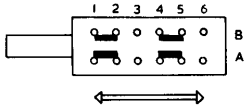

WAVECHANGE SWITCH S1 TOP VIEW SHOWN IN MW POSITION

BOTTOM VIEW T1, T2

BOTTOM VIEW L3, L4, L7

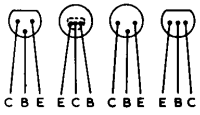

ALTERNATIVE TRANSISTOR BASES TX1 - TX5

TX6 TX7 TX8

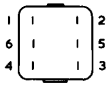

ALTERNATIVE BOTTOM VIEW T1, T2

ISOLATED NEGATIVE LINE

OUTER CASING

ARROW INDICATES CLOCKWISE ROTATION OF SPINDLE

NOTE:-

1. CAPACITORS - UNLESS OTHERWISE STATED - DECIMAL VALUES LESS THAN 1 ARE IN µF AND ALL OTHER VALUES ARE IN pF.
2. * - EXACT VALUE TO BE DETERMINED BY PRODUCTION PROCESS. REPLACE WITH THE SAME VALUE OF ORIGINAL PART.
3. COMPONENT LIST :-

C1 - C25 L1 - L8 R1 - R35
C27 - C31
C33
C37 & C38
C41 & C43

FIG.17 MODEL 124 CIRCUIT DIAGRAM

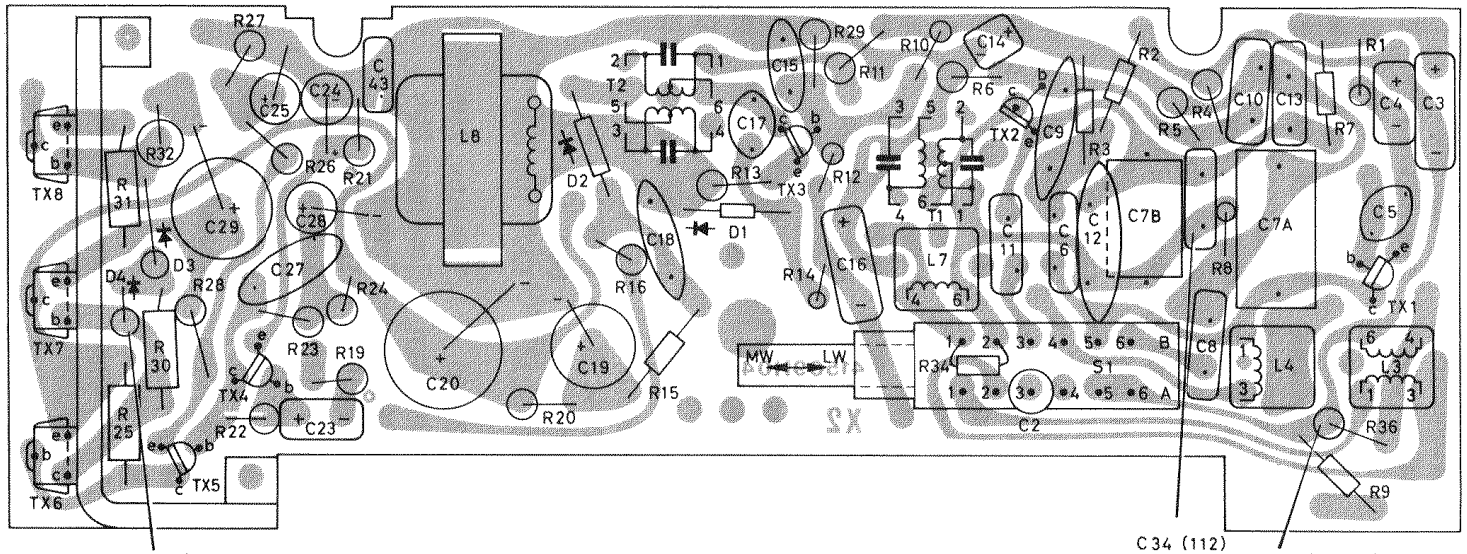

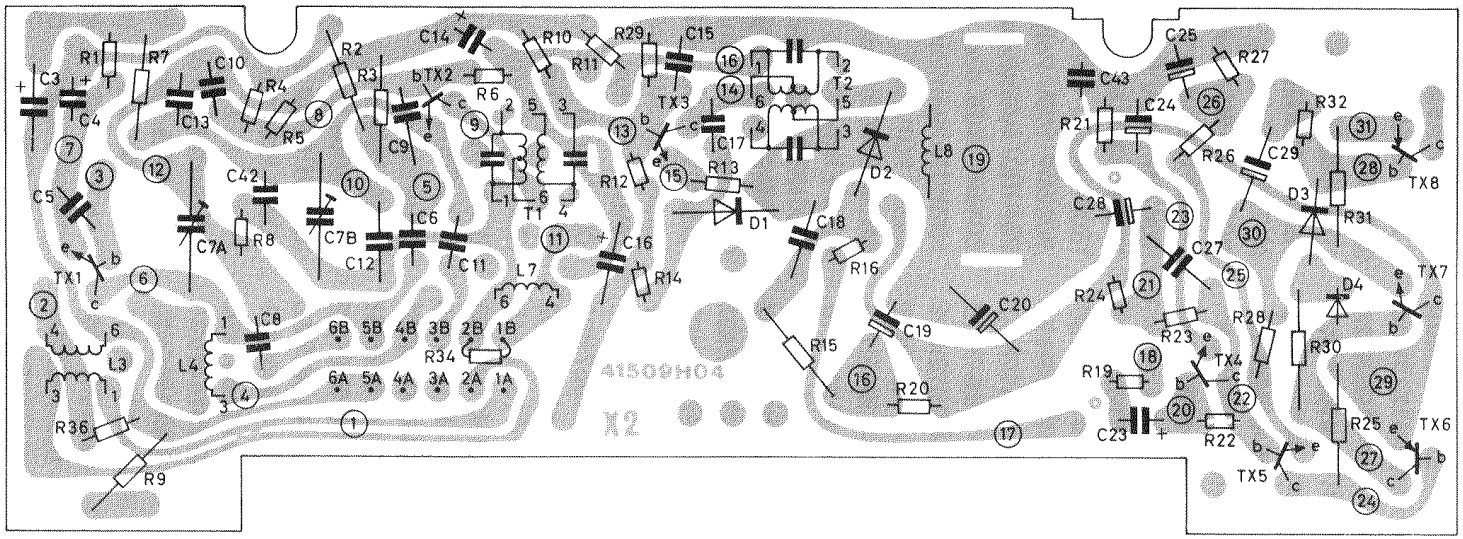

FIG. 18 PRINTED CIRCUIT BOARD COMPONENTS

MODEL 112 REPLACEMENT PARTS LIST

Ref. No.	Part No.	Description
Capacitors		
C1	20-41069H01	10-80PF Trimmer
C2	8-41290H04	.0013MF 160V Polyester
C3	23-41512H01	10MF 6V Aluminium
C4	23-41512H04	4.7MF 6.3V Aluminium
C5	21-41067H26	330PF 100V disc. cer.
C6	21-41035H15	100PF 100V Mica
C7A	20-41267H05	10-80PF Trimmer
C7B	20-41706H01	10-70PF Trimmer
C8	8-41042H05	.0022MF 100V Polyester
C9	21-41067H09	.01MF 100V disc. cer.
C10	8-41042H09	.0047MF 100V Polyester
C11	21-41035H15	100PF 100V Mica
C12	21-41061H06	180PF N330 100V disc. cer
C13	8-41042H47	.0082MF 100V Polyester
C14	23-41512H02	1MF 16V Aluminium
C15	21-41067H22	.001MF 100V disc. cer.
C16	23-41512H01	10MF 6V Aluminium
C17	21-41067H26	330PF 100V disc. cer.
C18	21-41067H59	.001MF 100V disc. cer.
C19	23-41511H16	400MF 16V e'lytic
C20	23-41511H14	1000MF 16V e'lytic
C21	23-41512H07	0.1MF 25V Aluminium
C22	23-41512H07	0.1MF 25V Aluminium
C23	23-41512H03	.22MF 16V Aluminium
C24	23-41512H01	10MF 6.3V Aluminium
C25	23-41511H02	32MF 10V e'lytic
C27	21-41067H07	.005MF 100V disc. cer.
C28	23-41511H02	32MF 10V e'lytic
C29	23-41511H15	1000MF 10V e'lytic
C30	21-41067H59	.001MF 100V disc. cer.
C31	21-41067H58	0.1MF 20V disc. cer.
C32	64-41012H01	Spark Plate
C33	21-41061H57	27PF 100V disc. cer.
C34	21-41035H32	82PF 100V Mica
C35	21-41067H59	.001MF 100V disc. cer.
C36	8-41186H07	0.1MF 50V Film
Resistors and controls		
R1	6-10164J59	220 10% 1/8W carbon film
R2	6-41045C33	470K 10% ¼W
R3	6-41045C01	1000 10% ¼W
R4	6-41045C15	15K 10% ¼W
R5	6-41045C17	22K 10% ¼W
R6	6-41045C09	4700 10% ¼W
R7	6-41045C05	2200 10% ¼W
R8	6-41045A77	3900 5% ¼W
R9	6-41045C01	1000 10% ¼W
R10	6-41045C28	180K 10% ¼W
R11	6-41046B88	100 10% ½W
R12	6-41045C26	120K 10% ¼W
R13	6-41046B78	15 10% ½W
R14	6-10164J77	6800 10% 1/8W carbon film
R15	6-41045C43	3.3M 10% ¼W
R16	6-41046C11	6800 10% ½W
R17	6-41045C09	4700 10% ½W
R18	18-41050H01	Potentiometer, Vol/tone/ on-off
R19	6-41046B88	100 10% ½W
R20	6-41046B91	180 10% ½W
R21	6-41046C05	2200 10% ½W
R22	Replace with same value as original part	
R23	6-41046C15	15K 10% ½W
R24	6-41046C13	10K 10% ½W
R25	6-41046C01	1000 10% ½W
R26	6-41046B86	68 10% ½W
R27	6-41046B97	560 10% ½W
R28	6-41046C05	2200 10% ½W
R29	6-41045C15	15K 10% ¼W
R30	6-41046A11	6.8 5% ½W
R31	17-41030H02	0.47 10% W.W.
R32	17-41030H03	100 10% W.W.
R34	6-41045C15	15K 10% ¼W
R35	6-41045C28	180K 10% ¼W
R36	6-41046B97	560 10% ½W
R37	6-41046C26	120K 10% ½W
Transistors		
TX1	48-134805	Transistor, 25B
TX2	48-134804	Transistor, 25A
TX3	48-134807	Transistor, 24B
TX4	48-134810	Transistor, 54C
TX5	48-134811	Transistor, 54D
TX6	48-137160	Transistor, P2U
TX7	48-137037	Transistor, A4K
TX8	48-134987	Transistor, P1V
Electrical Parts		
D1	48-134816	Silicon diode DHD800
D2	48-41047H01	Diode 1N139
D3	48-134769	Diode 1N4001
L1	24-41017H01	Coil, RF choke
L3	24-41049H04	Coil, aerial padder (blue)
L4	24-41049H02	Coil, RF Padder (yellow)
L7	24-41049H03	Coil, osc. padder (red)

Ref. No.	Part No.	Description
Electrical Parts contd.		
L8	25-41056H03	Choke, filter
S1	40-41048H01	Switch, MW-LW selector
T1	24-41053H01	Transformer, I.F.
T2	24-41053H02	Transformer, diode
Mechanical Parts		
1	45-41029H01	Actuator, finger type
2	1-41224H34	Background Assy.
3	13-41034H05	Bezel
4	84-41509H04	Board, P.C.
5	43-41021H01	Bushing insulator
6	38-41044H04	Button, push LW
7	38-41044H03	Button, push MW
8	42-41522H01	Clamp, aerial lead
9	42-41644H01	Clamp, cable
10	42-41022H01	Clamp, cable
11	1-41300H19	Cover, bottom
12	15-41057H01	Cover, top
13	13-41129H01	Escutcheon, spindle
14	13-41646H01	Escutcheon, sub
15	15-41043H01	Housing, left-hand
16	15-41052H01	Housing, right-hand
17	14-41100H03	Insulator, transistor
18	36-41631H01	Knob, front
19	1-41224H38	Knob, tone
20	1-41224H37	Knob, tuning
21	65-41301H01	Lamp, pilot 12V 2.2W
22	30-41548H01	Lead aerial
23	30-41127H02	Lead assembly, speaker
24	9-41125H01	Lead assembly, supply
25	2-41066H01	Nut, clinch
26	2-41019H01	Nut, hex
27	2-41128H01	Nut, spindle
28	5-6846	Rivet, .145x5/32
29	34-41650H01	Scale, dial
30	3-41268H18	Screw, 2.5x10mm cad
31	3-41268H02	Screw, tapping No. 4x¼ blk.
32	3-41268H01	Screw, tapping No. 4x¼ cad.
33	3-41268H23	Screw, tapping No. 4x¼ cad. washer hd.
34	3-41268H05	Screw, tapping No. 6x¼ cad.
35	3-41268H03	Screw, tapping No. 6x5/16 cad.
36	47-41036H01	Shaft, manual tuning, assembly.
37	26-41680H01	Shield, light
38	26-41064H01	Shield, potentiometer
39	26-41060H01	Sink, heat
40	9-41040H02	Socket, pilot light (and bracket)
41	31-41593H02	Tag panel
42	13-41150H03	Trim, decorative
43	1-41224H41	Trimplate assy.
44	1-41224H64	Tuner and ancillaries
45	4-41020H01	Washer
46	4-41570H01	Washer, felt.

MODEL 114 REPLACEMENT PARTS LIST

Ref. No.	Part No.	Description
Capacitors		
C1	20-41069H01	10PF-80PF Trimmer
C2	8-41290H04	.0013MF 160V Polyester
C3	23-41512H01	10MF 6V Aluminium
C4	23-41512H04	4.7MF 6.3V Aluminium
C5	21-41067H26	330PF 100V disc. cer.
C6	21-41035H15	100PF 100V Mica
C7A	20-41267H05	10PF-80PF Trimmer
C7B	20-41706H01	10-70PF Trimmer
C8	8-41042H05	.0022MF 100V Polyester
C9	21-41067H09	.01MF 100V disc. cer.
C10	8-41042H09	.0047MF 100V Polyester
C11	21-41035H15	100PF 100V Mica
C12	21-41061H06	180PF N330 100V disc. cer.
C13	8-41042H47	.0082MF 100V Polyester
C14	23-41512H02	1MF 16V Aluminium
C15	21-41067H22	.001MF 100V disc. cer.
C16	23-41512H01	10MF 6V Aluminium
C17	21-41067H26	330PF 100V disc. cer.
C18	21-41067H07	.005MF 100V disc. cer.
Capacitors contd.		
C19	23-41511H16	400MF 16V e'lytic
C20	23-41511H14	1000MF 16V e'lytic
C21	23-41512H03	0.22MF 16V Aluminium
C22	23-41512H03	0.22MF 16V Aluminium
C23	23-41512H04	4.7MF 6.3V Aluminium
C24	23-41511H02	32MF 10V e'lytic
C25	23-41511H02	32MF 10V e'lytic
C27	21-41067H07	.005MF 100V disc. cer.
C28	23-41511H02	32MF 10V e'lytic
C29	23-41511H15	1000MF 10V e'lytic
C30	21-41067H59	.001MF 100V disc. cer.
C31	21-41067H58	0.1MF 20V disc. cer.
C33	64-41012H01	Spark Plate
C37	21-41061H57	27PF N750 100V disc. cer.
C38	23-41511H01	20MF 16V e'lytic
C41	21-41067H59	.001MF 100V disc. cer.
C42	21-41035H32	82PF 100V Mica
C43	8-41186H07	0.1MF 50V Film

Ref. No.	Part No.	Description
Resistors and Controls		
R1	6-10164J59	220 10% 1/8W Carbon Film
R2	6-41045C33	470K 10% ¼W
R3	6-41045C01	1000 10% ¼W
R4	6-41046C15	15K 10% ½W
R5	6-41045C17	22K 10% ¼W
R6	6-41045C09	4700 10% ¼W
R7	6-41045C05	2200 10% ¼W
R8	6-41045A77	3900 5% ¼W
R9	6-41045C01	1000 10% ¼W
R10	6-41045C28	180K 10% ¼W
R11	6-41046B88	100 10% ½W
R12	6-41045C26	120K 10% ¼W
R13	6-41046B78	15 10% ½W Carbon Film
R14	6-10164J77	6800 10% 1/8W Carbon Film
R15	6-41045C43	3.3M 10% ¼W
R16	6-41046C11	6800 10% ½W
R17	6-41045C07	3300 10% ¼W
R18	18-41050H01	Potentiometer, vol/tone/on-off
R19	6-41046B88	100 10% ½W
R20	6-41046B91	180 10% ½W
R21	6-41046C05	2200 10% ½W
R22	Replace with same value as original part	
R23	6-41046C15	15K 10% ½W
R24	6-41046C13	10K 10% ½W
R25	6-41046C01	1000 10% ½W
R26	6-41046B86	68 10% ½W
R27	6-41046B97	560 10% ½W
R28	6-41046C05	2200 10% ½W
R29	6-41045C15	15K 10% ¼W
R30	6-41046A13	8.2 5% ½W
R31	17-41030H04	1.0 10% W.W.
R32	6-41362H01	82 10% 1W
R34	6-41045C15	15K 10% ¼W
R35	6-41045C28	180K 10% ¼W
R36	6-41046B97	560 10% ½W
Transistors		
TX1	48-134805	Transistor, 25B
TX2	48-134804	Transistor, 25A
TX3	48-134807	Transistor, 24B
TX4	48-134810	Transistor, 54C
TX5	48-134811	Transistor, 54D
TX6	48-137160	Transistor, P2U
TX7	48-137149	Transistor, A6D
TX8	48-137160	Transistor, P2U
Electrical Parts		
D1	48-134816	Silicon diode DHD800
D2	48-41047H01	Diode 1N139
D3	48-41193H01	Diode 10D1
D4	48-41193H01	Diode 10D1
L1	24-41017H01	Coil, RF choke
L3	24-41049H01	Coil, aerial padder (green)
L4	24-41049H02	Coil, RF padder (yellow)
L7	24-41049H03	Coil, osc. padder (red)
L8	25-41056H03	Choke, filter

Ref. No.	Part No.	Description
Electrical Parts contd.		
S1	40-41048H01	Switch, MW-LW selector
S2	40-41668H01	Switch, polarity
T1	24-41053H01	Transformer, I.F.
T2	24-41053H02	Transformer, diode
Mechanical Parts		
1	45-41029H01	Actuator, finger type
2	1-41224H34	Background assy.
3	13-41034H01	Bezel
4	84-41509H04	Board, P.C. (less components)
5	43-41021H01	Bushing, insulator
6	38-41044H02	Button, push—LW
7	38-41044H01	Button, push—MW
8	42-41644H01	Clamp, cable
9	42-41022H01	Clamp, cable
10	42-41522H01	Clamp, aerial lead
11	1-41300H19	Cover, bottom
12	15-41057H01	Cover, top
13	13-41129H01	Escutcheon, spindle
14	13-41646H01	Escutcheon, sub
15	15-41043H01	Housing, left-hand
16	15-41052H01	Housing, right-hand
17	14-41628H01	Insulator, transistor
18	1-41224H56	Knob, front
19	1-41224H38	Knob, tone
20	1-41224H37	Knob, tuning
21	65-41301H01	Lamp, pilot 12V 2.2W
22	30-41548H01	Lead, aerial
23	30-41127H02	Lead assembly, speaker
24	9-41125H01	Lead assembly, supply
25	2-41066H01	Nut, clinch
26	2-41019H01	Nut, hex
27	2-41128H01	Nut, spindle
28	5-41270H01	Rivet, 122x1/8
29	34-41650H01	Scale, dial
30	3-41268H18	Screw, 2.5x10mm cad
31	3-41268H02	Screw, tapping No. 4x¼blk.
32	3-41268H01	Screw, tapping No. 4x¼ cad.
33	3-41268H23	Screw, tapping No. 4x¼ cad.
34	3-41268H05	Screw, tapping No. 6x¼ cad.
35	3-41268H03	Screw, tapping No. 6x5/16 cad.
36	47-41036H02	Shaft, manual tuning.
37	26-41680H01	Shield, light
38	26-41064H01	Shield, potentiometer
39	26-41060H02	Heat sink
40	9-41040H02	Socket, pilot light (and bracket)
41	31-41593H02	Tag Panel
42	13-41150H02	Trim, decorative
43	1-41300H23	Trimplate assembly
44	1-41224H64	Tuner and ancillaries
45	4-41020H01	Washer
46	4-41570H01	Washer, felt
47	4-40090H02	Washer, lock

MODEL 122 REPLACEMENT PARTS LIST

Ref. No.	Part No.	Description
Capacitors		
C1	20-41069H01	10-80PF Trimmer
C2	8-41559H01	1650PF 125V Polystyrene
C3	23-41512H01	10MF 6V Aluminium
C4	23-41512H04	4.7MF 6.3V Aluminium
C5	21-41067H26	330PF 100V disc. cer.
C6	21-41035H15	100PF 100V Mica
C7A	20-41267H01	30-140PF Trimmer
C7B	20-41267H05	10-80PF Trimmer
C8	8-41042H05	.0022MF 100V Polyester
C9	21-41067H09	.01MF 100V disc. cer.
C10	8-41042H09	.0047MF 100V Polyester
C11	21-41035H15	100PF 100V Mica
C12	21-41035H29	300PF 100V Mica
C13	8-41042H47	.0082MF 100V Polyester
C14	23-41512H02	1MF 16V Aluminium
C15	21-41067H22	.001MF 100V disc. cer.
C16	23-41512H01	10MF 6V Aluminium
C17	21-41067H26	330PF 100V disc. cer.
C18	21-41067H07	.005MF 100V disc. cer.
C19	23-41511H16	400MF 16V e'lytic
C20	23-41511H14	1000MF 16V e'lytic
C21	23-41512H03	.22MF 16V aluminium
C22	23-41512H03	.22MF 16V aluminium
C23	23-41512H04	4.7MF 6.3V aluminium
C24	23-41511H02	32MF 10V e'lytic
C25	23-41511H02	32MF 10V e'lytic
C27	21-41067H07	.005MF 100V disc. cer.
C28	23-41511H02	32MF 10V e'lytic
C29	23-41511H15	1000MF 10V e'lytic
C30	21-41067H59	.001MF 100V disc. cer.
C31	21-41067H58	0.1MF 20V disc. cer.
C32	64-41012H01	Spark Plate
C33	21-41061H57	27PF 100V disc. cer.
C36	21-41067H59	.001MF 100V disc. cer.
Resistors and Controls		
R1	6-10164J59	220 10% 1/8W carbon film
R2	6-41045C33	470K 10% ¼W
R3	6-41045C01	1000 10% ¼W
R4	6-41046C15	15K 10% ½W
R5	6-41045C17	22K 10% ¼W
R6	6-41046C09	4700 10% ½W
R7	6-41045C05	2200 10% ¼W
R8	6-41045A77	3900 5% ¼W
R9	6-41045C01	1000 10% ¼W
R10	6-41045C28	180K 10% ¼W
R11	6-41046B88	100 10% ½W
R12	6-41045C26	120K 10% ¼W
R13	6-41046B78	15 10% ½W
R14	6-10164J77	6800 10% 1/8W carbon film
R15	6-41045C43	3.3M 10% ¼W
R16	6-41046C11	6800 10% ½W
R17	6-41046C07	3300 10% ½W
R18	18-41050H02	Potentiometer, Vol/tone
R19	6-41046B88	100 10% ½W
R20	6-41046B91	180 10% ½W
R21	6-41046C05	2200 10% ½W
R22	Replace with same value as original part	
R23	6-41046C15	15K 10% ½W
R24	6-41046C13	10K 10% ½W
R25	6-41046C01	1000 10% ½W
R26	6-41046B86	68 10% ½W
R27	6-41046B97	560 10% ½W
R28	6-41046C05	2200 10% ½W
R29	6-41045C15	15K 10% ¼W
R30	6-41046A11	6.8 5% ½W
R31	17-41030H02	0.47 10% W.W.
R32	17-41030H03	100 10% W.W.
R33	6-41046C26	120K 10% ½W
R34	6-41045C15	15K 10% ¼W
R35	6-41046C26	120K 10% ½W
Transistors		
TX1	48-134805	Transistor, 25B
TX2	48-134804	Transistor, 25A
TX3	48-134807	Transistor, 24B
TX4	48-134810	Transistor, 54C
TX5	48-134811	Transistor, 54D
TX6	48-137160	Transistor, P2U
TX7	48-137037	Transistor, A4K
TX8	48-134987	Transistor, P1V
Electrical Parts		
D1	48-134816	Silicon diode DHD800
D2	48-41047H01	Diode 1N139
D3	48-134769	Silicon diode 1N4001
L1	24-41272H01	Coil, image trap
L3	24-41049H01	Coil, aerial padder (Grn)
L4	24-41049H02	Coil, RF Padder (yellow)
L7	24-41049H03	Coil, osc. Padder (red)
L8	25-41056H03	Choke, filter
S1	40-41048H01	Switch, MW-LW selector
T1	24-41053H01	Transformer, I.F.
T2	24-41053H02	Transformer, diode

Ref. No.	Part No.	Description
Mechanical Parts		
1	45-41656H01	Arm, actuating
2	45-41671H01	Actuator, switch
3	1-41224H34	Background Assy.
4	13-41034H06	Bezel
5	84-41509H04	Board, P.C. (less components)
6	7-41657H01	Bracket, bandchange
7	7-41084H01	Bracket, tuner
8	43-41021H01	Bushing insulator
9	43-41023H03	Bushing, tuning shaft
10	38-41694H01	Button, push (ON—OFF)
11	38-41694H02	Button, push (LW)
12	38-41694H03	Button, push (MW)
13	42-41022H01	Clamp, cable
14	15-41057H01	Cover, top
15	1-41300H19	Cover, bottom
16	30-41521H01	Dial, cord
17	1-41224H98	Escutcheon, sub.
18	15-41043H01	Housing, left-hand
19	1-41224H27	Housing, right-hand
20	14-41100H03	Insulator, transistor
21	36-41631H01	Knob, front
22	1-41224H38	Knob, tone
23	1-41224H37	Knob, tuning
24	65-41301H01	Lamp, pilot 12V 2.2W
25	30-41127H02	Lead assembly, speaker
26	9-41125H01	Lead assembly, supply
27	2-41066H01	Nut, clinch
28	2-41019H01	Nut, hex
29	42-41692H02	Nut, push
30	2-41128H01	Nut, spindle
31	52-41070H02	Pointer
32	34-41339H01	Scale, dial
33	3-40069H22	Screw, tapping 2x¼ cad.
34	3-40069H12	Screw, tapping 4-24x3/16
35	3-41268H02	Screw, tapping No. 4x¼ blk.
36	3-41268H01	Screw, tapping No. 4x¼ cad.
37	3-40069H23	Screw, tapping No. 4x¼ cad.
38	3-41268H23	Screw, tapping 4-40x¼
39	3-41268H18	Screw, 2.5x10mm cad.
40	3-41268H03	Screw, tapping No. 6x5/16 cad.
41	26-41064H01	Shield, potentiometer
42	26-41060H01	Sink, heat
43	9-41075H02	Socket, aerial
44	9-41040H02	Socket, pilot light (and bracket)
45	41-41494H01	Spring, tension
46	40-41655H01	Switch, mechanism
47	31-41593H02	Tag panel
48	13-41150H03	Trim, decorative
49	1-41224H41	Trimplate assy.
50	77-41244H01	Tuner, manual
51	4-41020H01	Washer
52	4-41570H01	Washer, felt.

MODEL 124 REPLACEMENT PARTS LIST

Capacitors		
C1	20-41069H01	10PF-80PF Trimmer
C2	8-41559H01	1650PF 125V Polystyrene
C3	23-41512H01	10MF 6V Aluminium
C4	23-41512H04	4.7MF 6.3V Aluminium
C5	21-41067H26	330PF 100V disc. cer.
C6	21-41035H15	100PF 100V Mica
C7A	20-41267H01	30PF-140PF Trimmer
C7B	20-41267H05	10PF-80PF Trimmer
C8	8-41042H05	.0022MF 100V Polyester
C9	21-41067H09	.01MF 100V disc. cer.
C10	8-41042H09	.0047MF 100V Polyester
C11	21-41035H15	100PF 100V Mica
C12	21-41035H29	300PF 100V Mica
C13	8-41042H47	.0082MF 100V Polyester
C14	23-41512H02	1MF 16V Aluminium
C15	21-41067H22	.001MF 100V disc. cer.
C16	23-41512H01	10MF 6V Aluminium
C17	21-41067H26	330PF 100V disc. cer.
C18	21-41067H07	.005MF 100V disc. cer.
C19	23-41511H16	400MF 16V e'lytic
C20	23-41511H05	1000MF 16V e'lytic
C21	23-41512H03	0.22MF 16V Aluminium
Capacitors contd.		
C22	23-41512H03	0.22MF 16V Aluminium
C23	23-41512H04	4.7MF 6.3V Aluminium
C24	23-41511H02	32MF 10V e'lytic
C25	23-41511H02	32MF 10V e'lytic
C27	21-41067H07	.005MF 100V disc. cer.
C28	23-41511H02	32MF 10V e'lytic
C29	23-41511H15	1000MF 10V e'lytic
C30	21-41067H59	.001MF 100V disc. cer.
C31	21-41067H58	0.1MF 20V disc. cer.
C33	64-41012H01	Spark Plate
C37	21-41061H57	27PF N750 100V disc. cer.
C38	23-41511H01	20MF 16V e'lytic
C41	21-41067H59	.001MF 100V disc. cer.
C43	8-41186H07	0.1MF 50V Film
Resistors and Controls		
R1	6-10164J59	220 10% 1/8W Carbon Film
R2	6-41045C33	470K 10% ¼W
R3	6-41045C01	1000 10% ¼W
R4	6-41046C15	15K 10% ½W
R5	6-41045C17	22K 10% ¼W

Ref. No.	Part No.	Description
Resistors and Controls contd.		
R6	6-41045C09	4700 10% ¼W
R7	6-41045C05	2200 10% ¼W
R8	6-41045A77	3900 5% ¼W
R9	6-41045C01	1000 10% ¼W
R10	6-41045C28	180K 10% ¼W
R11	6-41046B88	100 10% ½W
R12	6-41045C26	120K 10% ¼W
R13	6-41046B78	15 10% ½W Carbon Film
R14	6-10164J77	6800 10% 1/8W Carbon Film
R15	6-41045C43	3.3M 10% ¼W
R16	6-41046C11	6800 10% ½W
R17	6-41045C07	3300 10% ¼W
R18	18-41050H01	Potentiometer, vol/tone/ on-off
R19	6-41046B88	100 10% ½W
R20	6-41046B91	180 10% ½W
R21	6-41046C05	2200 10% ½W
R22	Replace with same value as original part	
R23	6-41046C15	15K 10% ½W
R24	6-41046C13	10K 10% ½W
R25	6-41046C01	1000 10% ½W
R26	6-41046B86	68 10% ½W
R27	6-41046B97	560 10% ½W
R28	6-41046C05	2200 10% ½W
R29	6-41045C15	15K 10% ¼W
R30	6-41046A13	8.2 5% ½W
R31	17-41030H04	1.0 10% W.W.
R32	6-41362H01	82 10% 1W
R33	6-41045C26	120K 10% ¼W
R34	6-41045C15	15K 10% ¼W
R35	6-41046C26	120K 10% ½W
Transistors		
TX1	48-134805	Transistor, 25B
TX2	48-134804	Transistor, 25A
TX3	48-134807	Transistor, 24B
TX4	48-134810	Transistor, 54C
TX5	48-134811	Transistor, 54D
TX6	48-137160	Transistor, P2U
TX7	48-137149	Transistor, A6D
TX8	48-137160	Transistor, P2U
Electrical Parts		
D1	48-134816	Silicon diode DHD800
D2	48-41047H01	Diode 1N139
D3	48-41193H01	Diode 10D1
D4	48-41193H01	Diode 10D1
L1	24-41272H01	Coil, image trap
L2, 5, 6	77-41244H01	Tuner, manual
L3	24-41049H01	Coil, aerial padder (green)
L4	24-41049H02	Coil, RF padder (yellow)
L7	24-41049H03	Coil, osc. padder (red)
L8	25-41056H03	Choke, filter
S1	40-41048H02	Switch, MW-LW selector
S2	40-41668H01	Switch, polarity
T1	24-41053H01	Transformer, I.F.
T2	24-41053H02	Transformer, diode

Ref. No.	Part No.	Description
Mechanical Parts		
1	45-41072H01	Arm, actuating
2	1-41224H34	Background assy.
3	13-41034H07	Bezel
4	84-41509H04	Board, P.C. (less components)
5	7-41009H01	Bracket, switch
6	7-41084H01	Bracket, tuner
7	43-41021H01	Bushing, insulator
8	43-41023H03	Bushing, tuning shaft
9	38-41074H01	Button, slide
10	42-41022H01	Clamp, cable
11	15-41057H01	Cover, top
12	1-41300H19	Cover, bottom
13	30-41521H01	Dial cord
14	13-41129H01	Escutcheon, spindle
15	1-41224H52	Escutcheon, sub
16	15-41043H01	Housing, left-hand
17	15-41042H01	Housing, right-hand
18	14-41204H01	Insulator, f.t.
19	14-41628H01	Insulator, transistor
20	1-41224H39	Knob, front
21	1-41224H38	Knob, tone
22	1-41224H37	Knob, tuning
23	65-41301H01	Lamp, pilot 12V 2.2W
24	30-41127H02	Lead assembly, speaker
25	9-41125H01	Lead assembly, supply
26	2-41066H01	Nut, clinch
27	2-41019H01	Nut, hex
28	2-41128H01	Nut, spindle
29	52-41070H02	Pointer
30	5-41270H01	Rivet, 122x1/8
31	5-41304H01	Rivet, shoulder
32	34-41339H01	Scale, dial
33	3-41268H18	Screw, 2.5x10mm cad.
34	3-40069H12	Screw, tapping No. 4x3/16
35	3-41268H02	Screw, tapping No. 4x¼ blk.
36	3-41268H01	Screw, tapping No. 4x¼ cad.
37	3-41268H23	Screw, tapping No. 4x¼ washer, hd.
38	3-41268H03	Screw, tapping No. 6x5/16 cad.
39	26-41064H01	Shield, potentiometer
40	26-41060H02	Sink, heat
41	9-41075H02	Socket, aerial
42	9-41040H02	Socket, pilot light (and bracket)
43	41-41071H01	Spring, coil
44	41-41494H01	Spring, tension
45	31-41593H02	Tag panel
46	13-41150H04	Trim decorative
47	1-41224H41	Trim plate, assy.
48	4-41020H01	Washer
49	4-41570H01	Washer, felt
50	4-40090H20	Washer, lock

NOTE: Motorola reserves the right to change the information contained in this manual without prior notice.