JVC
VICTOR COMPANY OF JAPAN, LIMITED
MICRO EQUIPMENT DIVISION 12, 3-chome, Moriya-cho, Kanagawa-ku, Yokohama, 221 Japan

Printed in Japan
— 5304 — O —

JVC

SERVICE MANUAL

MODEL
MK-100
CASSETTE RECORDER

No. 0002
April 1978

Contents

Specification

DIMENSIONS : 81.5mm(W) x 179mm(H) x 28mm(D)
3-3/16"(W) x 7"(H) x 1-1/8"(D)

WEIGHT : Approx. 500g with batteries
1.1 lbs.

Type	:	Compact cassette recorder
Tape speed	:	4.8cm/s (1-7/8 ips)
Track system	:	2-track, monaural
Recording system	:	AC bias, ALC
Erasing system	:	DC erase
Cassette	:	Philips type compact cassette
Fast forward time	:	Within 120sec. (C-60 cassette)
Rewind time	:	Within 140sec. (C-60 cassette)
Wow & flutter	:	0.25% wrms
Frequency response	:	300 – 8,000Hz
Semiconductors	:	1 IC, 18 transistors
Speaker	:	5cm (2") Samarium cobalt speaker
Power output	:	350mW at 1kHz
Input jacks	:	MIC; sensitivity 0.3mV accepts a low impedance microphone. DC IN (6V)
Output jacks	:	EAR, REMOTE
Power supply	:	DC 6V (4"AA" batteries) AC (using the AC adaptor) Car battery (using the car adaptor)
Battery life	:	Continuous recording time with the built-in microphone; approx. 2.5 hours with the super type battery SUM-3 (size AA)

Packing

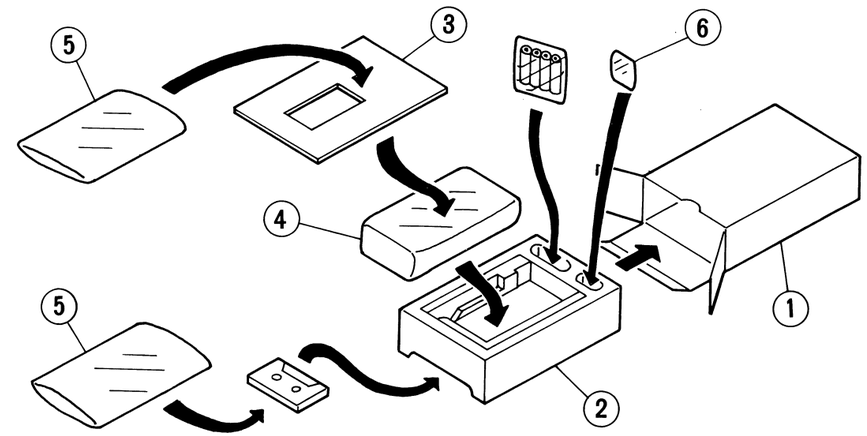

Fig. 28

Asterisked parts (*) show new parts.

Ref. No.	Parts No.	Parts Name	Remarks	Q'ty
1~3	*F28310-0B	Packing Case Ass'y		1 set
1	*F28310-04	Packing Case		1
2	*F28103-01	"		1
3	*F28320-01	Pad		1
4	QPGA015-02505	Poly Bag	for Set	1
5	QPGA012-02505	"	for Soft Case, Inst. Book	2
6	QPGA010-01503	"	for Earphone	1
	QPGA006-01903	"	for Security Strap	1

Accessories

Asterisked parts (*) show new parts.

Ref. No.	Parts No.	Parts Name	Remarks	Q'ty
	F00324-32	Cassette Tape		1
	UM3DEP	Battery		4
	*F28309-01	Soft Case		1
	*QME1308-011	Earphone		1
	F27404-0B	Head Cleaning Ass'y		1 set
	*MK100-IB	Instruction Book		1

Ref. No.	Parts No.	Parts Name	Remarks	Q'ty
39	*QSS0041-001	Slide Switch	S4	1
40	*F28539-01	Switch Bracket		1
41	*SPSK1402M	Screw		2
42	*SPSK2002M	〃		2
43	*F00314-02	Microphone		1
44	*F28541-01	Mic. Cushion		1
45	*F00320-02	Speaker		1
46	*F28545-01	Speaker Cushion		1
47	*F28570-01	Color Seal		1
48	*F28550-01	Hand Strap	Security Strap	1
50	*F28547-11	Name Plate		1
51	*F16402-01	Label		1
52	QEW40JA-227MS	E. Capacitor	C23	1
53	*F00410-235M	Tapping Screw		1
54	SPSK2004N	Screw		2
55	WNS2000N	Washer		2
56	*SPSK2003M	Screw	B	17
57	*SPSK2004M	〃	B	1
58	*SPSK2004N	〃		3
59	*QMA0621-005	DC Jack Ass'y		1
60	*F00303-15	Spacer		1
61	*F28584-01	Mic. Grill		1
62	*SPSK2003M	Screw	S	4
63	*SPSK2003N	〃	S	13
64	W06B	Diode	D20	1

Features

- Ultra-thin, ultra-compact design — a portable of portables designed to fit the palm of your hand.
- A single sliding knob controls tape start, stop and rewind, permitting simple, single-hand operation.
- Three LED recording level indicators, one of which also functions as a battery checker, assure you of the best possible recordings.
- A microphone sensitivity select switch allows optimum recordings of both dictations and conferences, together with the ALC (Automatic Level Control) circuit.
- A newly developed ultra-thin speaker having a diameter of 50mm and incorporating a powerful samarium cobalt magnet achieves outstanding sound quality.
- Auto-stop mechanism stops the motor at the end of the tape during recording, playback or rewind. Also a warning tone is heard at the tape's end, sparing of battery power.
- The stand-by mechanism allows starting a recording at a precise point, saving tape consumption.
- Three-digit tape counter helps in locating the beginning of a particular tape section.

Names of Parts

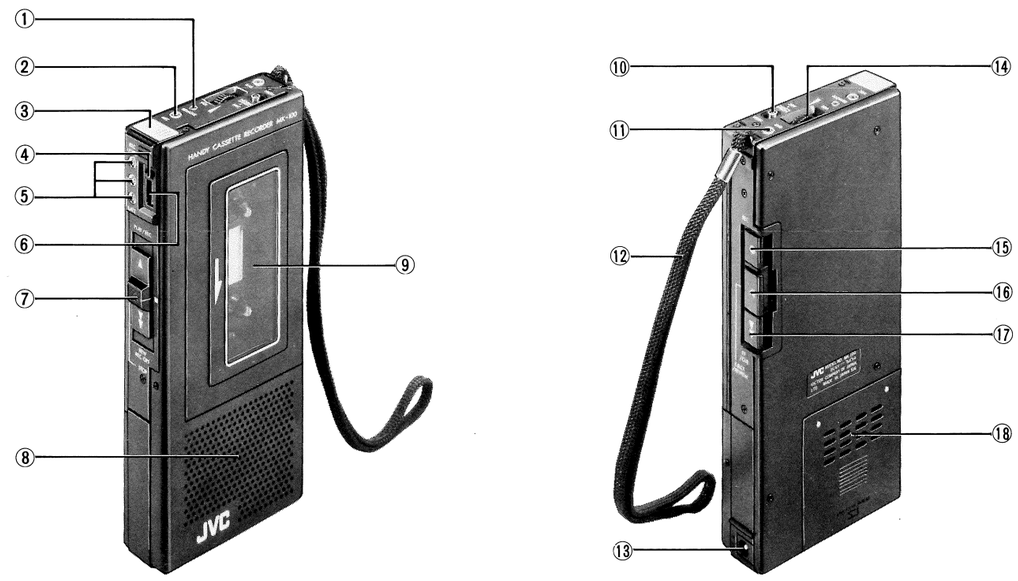

Fig. 1

1 Remote control jack (REMOTE)
2 External microphone jack (MIC)
3 Built-in condenser microphone
4 Counter reset button
5 LED indicators
6 Tape counter
7 Slide control knob
8 Speaker
9 Cassette compartment
10 Sensitivity select switch (HIGH/NORM)
11 Earphone jack (EAR)
12 Security strap
13 External DC input jack (DC IN 6V)
14 Volume control knob (VOL)
15 Record button (REC)
16 EJECT/REVIEW button
17 FF/CUE button
18 Battery compartment

Disassembly and Replacement

The MK-100 which features an ultra-compact design and high performance uses miniature-sized parts which are closely arranged. Use special care when servicing it.

Enclosure

Parts Name	Procedure	Ref. No.	Description
Bottom panel	Remove four mounting screws and then remove the bottom panel.	Fig. 3 ①	SPSK2003M(Black) SPSK2003N(Silver)
Top panel	Remove five screws and then remove the top panel.	Fig. 2,3 ②	SPSK2003M(Black) SPSK2003N(Silver)
Front panel	1. Pull out the control knob. 2. Remove two screws and then remove the front panel.	Fig. 2 ③	SPSK2003M(Black)
Rear panel	1. Remove two screws. 2. Remove one screw and pull out the security strap. 3. Then remove the rear panel.	Fig. 3 ④ Fig. 3 ⑤	SPSK2003M(Black) SPSK2004M(Black)
Inner-lay and cassette lid	1. Remove four screws and then remove the cassette lid ass'y. 2. Then put out the hinge shaft.	Fig. 4 ⑥	SPSK2003M(Black) SPSK2003N(Silver)

Note: When disassembling the panel, take care not to scratch it.

Electric parts

Parts Name	Procedure	Ref. No.	Description
Circuit board	1. Remove the bottom panel, front panel, control knob, top panel and rear panel. 2. Then remove three screws. **Note:** When removing the circuit board, if you set the circuit board up by a screw-driver keeping the leaf switch away from the F.F. button, removing is very easy. 3. Remove seven wires and one diode soldered to circuit board. Then remove circuit board ass'y. When installing the circuit board, please install it after the slide switch for PLAY/RECORD is switched over to the play position.	 Fig. 5 ⑦ Fig. 5,6,7	See "Enclosure" section. SPSK2004N
Sub-board	Remove one screw and raise the sub-board.	Fig. 4 ⑧	F00410-235M

Parts list of total assembly

Asterisked parts (*) show new parts.
B : Black Type S : Silver Type

Ref. No.	Parts No.	Parts Name	Remarks	Q'ty
1	*	Mecha. Ass'y		1 set
2	*	Amp. Ass'y		1 set
3~10	*FB28311	Battery Case Ass'y		1 set
3	*F28102-01	Battery Case		1
4	*F28576-01	Sheet		1
5	*F28515-01	Terminal Ass'y		1 set
6	*F28518-0A	〃		1 set
7	*F28520-0A	〃		1 set
8	*F28522-0A	〃		1 set
9	*F28524-01	Terminal		1
10	*F28568-01	Ribbon		1
11	*F28525-01	Bracket		1
12	*F28526-01	〃		1
13	*F28200-01	Rear Panel		1
14	*F28527-01	Eject Button		1
15	*F28528-01	Record Button		1
16	*F28529-01	FF Button		1
17	*F28560-0B	Front Panel Ass'y		1 set
18	*F28555-01	Mic. Grill		1
19	*F00303-11	Spacer		1
20	*F28577-02	Control Knob		1
21~27	*FB28312-0A	Cassette Lid Ass'y	B	1 set
	* 〃 -0B	〃	S	1 set
21	*F28304-01	Cassette Lid	B	1
	* 〃 -02	〃	S	1
22	*F28556-01	Pin		1
23	*F28567-01	Window	B	1
	* 〃 -02	〃	S	1
24	*F28305-01	Inner Lay	B	1
	* 〃 -02	〃	S	1
25	*F28533-01	Hinge Shaft		1
26	*F28558-02	Spring	B	2
	* 〃 -01	〃	S	2
27	*F28571-02	Mirror		1
28	*F00303-16	Spacer		2
29~31	*FB28313-0A	Top Panel Ass'y	B	1 set
	* 〃 -0B	〃	S	1 set
29	*F28203-03	Top Panel	B	1
	* 〃 -04	〃	S	1
30	*F28542-01	Speaker Net		1
31	*F28543-01	Rubber Sheet		1 set
32~33	*FB28314-0A	Bottom Panel Ass'y	B	1 set
	* 〃 -0B	〃	S	1 set
32	*F28204-01	Bottom Panel	B	1
	* 〃 -02	〃	S	1
33	*F28546-01	Insulator		1
34~36	*F28565-0A	Battery Lid Ass'y	B	1 set
	* 〃 -0C	〃	S	1 set
34	*F28204-01	Battery Lid	B	1
	* 〃 -02	〃	S	1
35	*F28564-01	Spring		1
36	*F28538-01	Rivet	B	2
	* 〃 -02	〃	S	2
37	*F00303-10	Spacer		1
38	*F28559-01	Washer		1

Circuit Board Parts

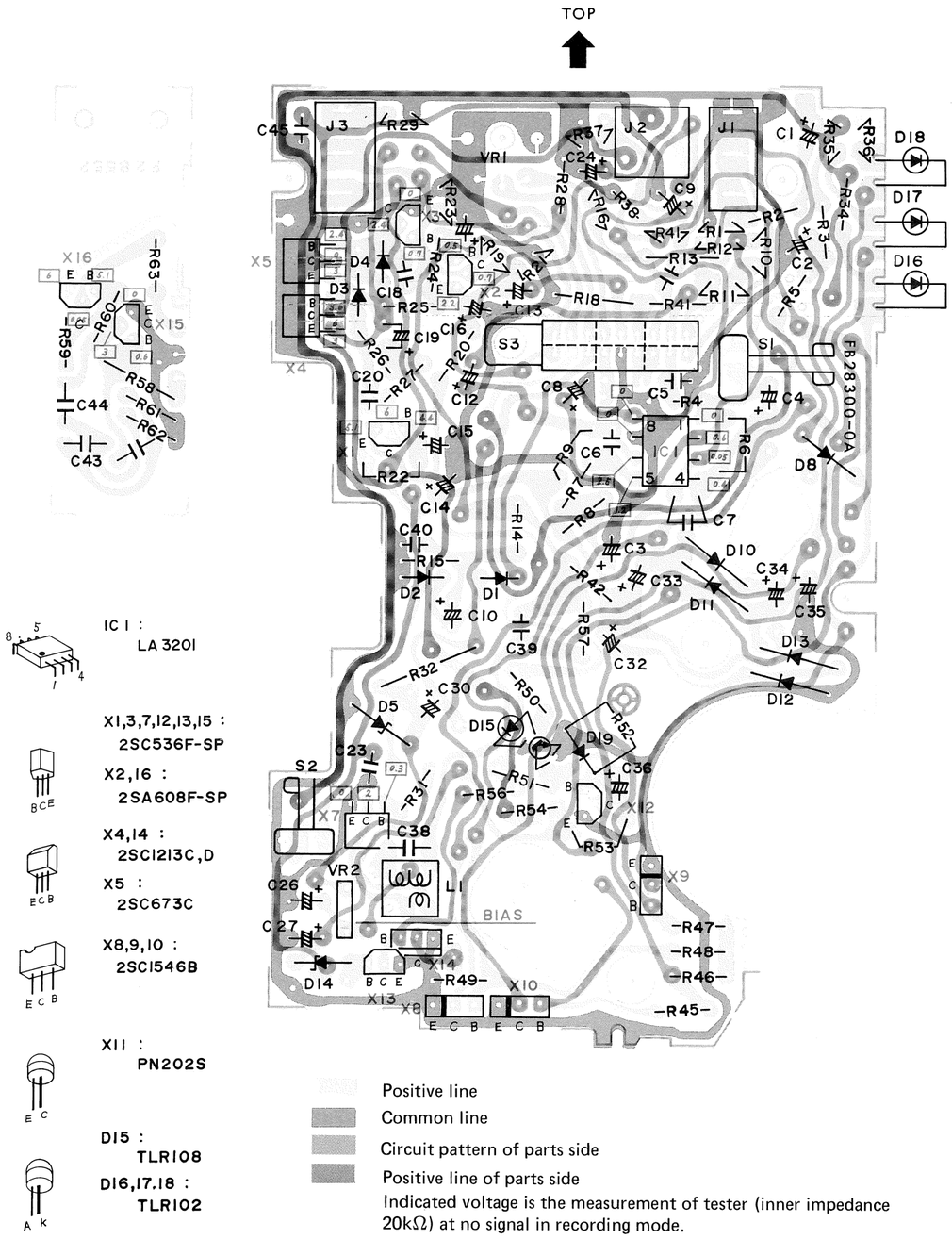

Fig. 25

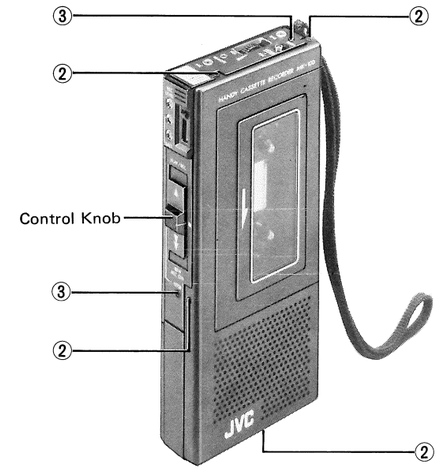

Fig. 2

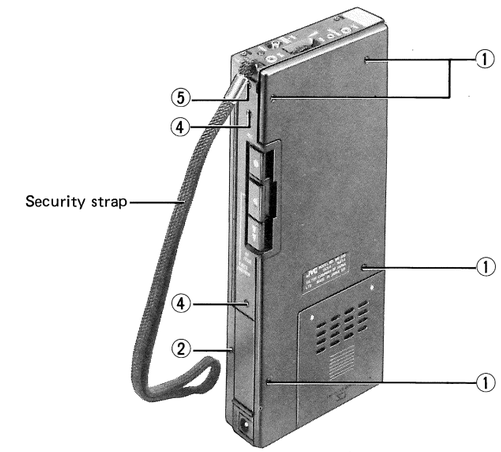

Fig. 3

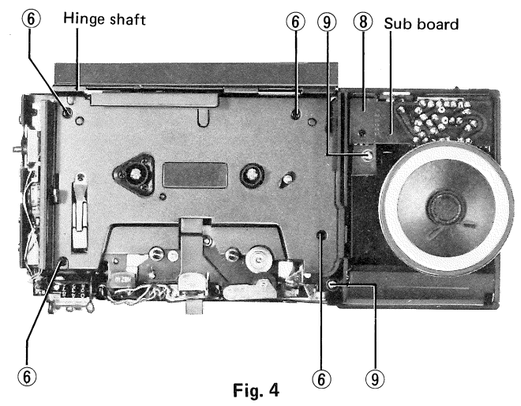

Fig. 4

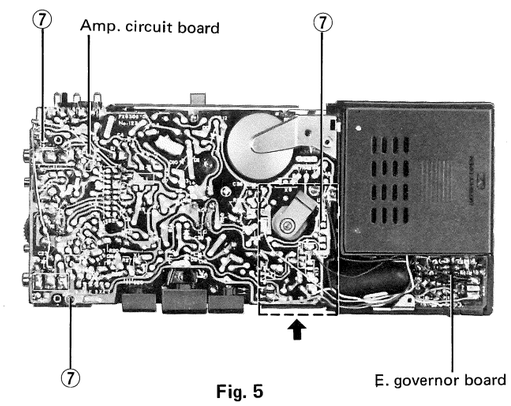

Fig. 5

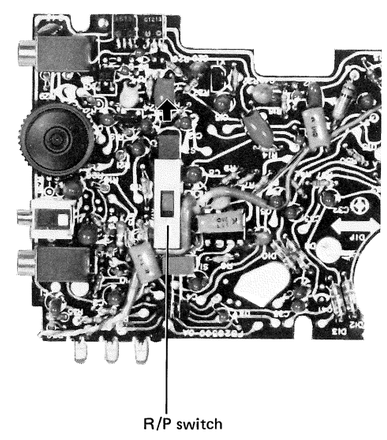

Fig. 6

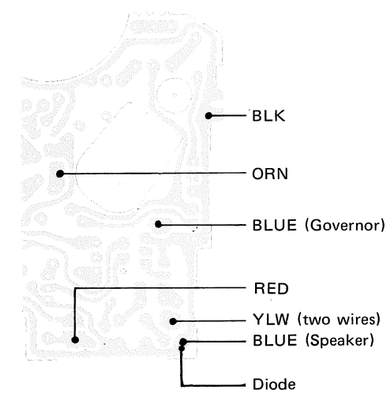

Fig. 7

Mechanical parts

Parts Name	Procedure	Ref. No.	Remarks
Mecha. ass'y	Remove two screws. Then the Meca. ass'y can be separated from the battery case ass'y.	Fig. 4 ⑨	SPSK2004N
Motor	1. Remove two screws and then remove the motor and motor bracket. 2. Remove two screws.	Fig. 8 ⑩ Fig. 9 ⑪	SPSK2045M SPSK1703M
Flywheel ass'y	1. Remove one screw and then remove two screws. 2. Then remove the flywheel holder.	Fig. 8 ⑫⑬	SPSK1703M SPSK2003M
Belts	For capstan: 1. Remove one screw and then remove two screws. Then remove the flywheel holder. 2. Remove an E ring and then remove the take-up arm ass'y.	Fig. 8 ⑭	REE2000
Pinch roller arm ass'y	1. Remove an E ring and then remove the pinch roller arm ass'y, together pinch roller arm spring.	Fig. 10 ⑮	REE1500
Take-up disk	Remove a disk screw.	Fig. 10 ⑯	F28457-01
Rewind arm ass'y and belt	Remove an E ring.	Fig. 8 ⑰	REE1500
FF idler ass'y	1. Remove an E ring and then remove the take-up arm ass'y. 2. Then remove an E ring.	Fig. 8 ⑭ Fig. 8 ⑱	REE2000 REE1500

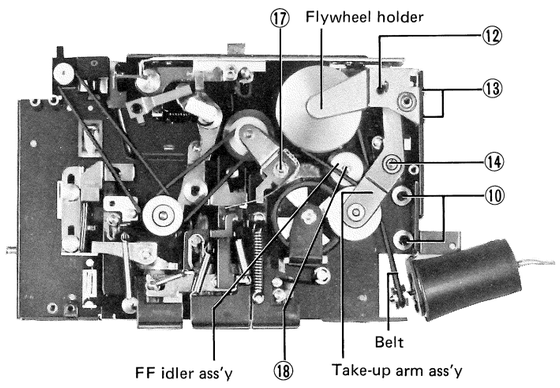

Fig. 8

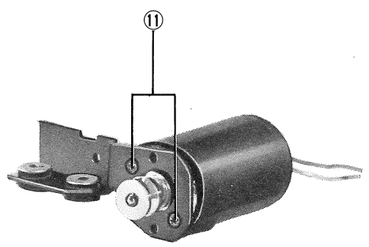

Fig. 9

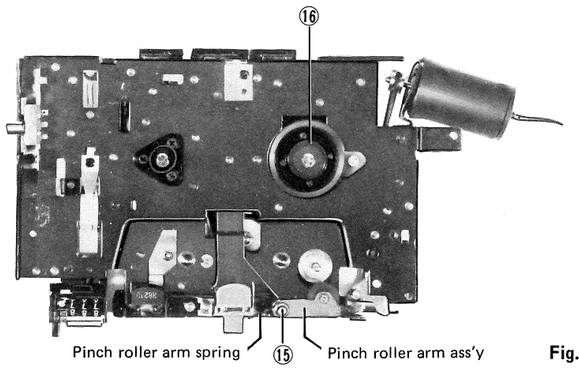

Fig. 10

Wiring

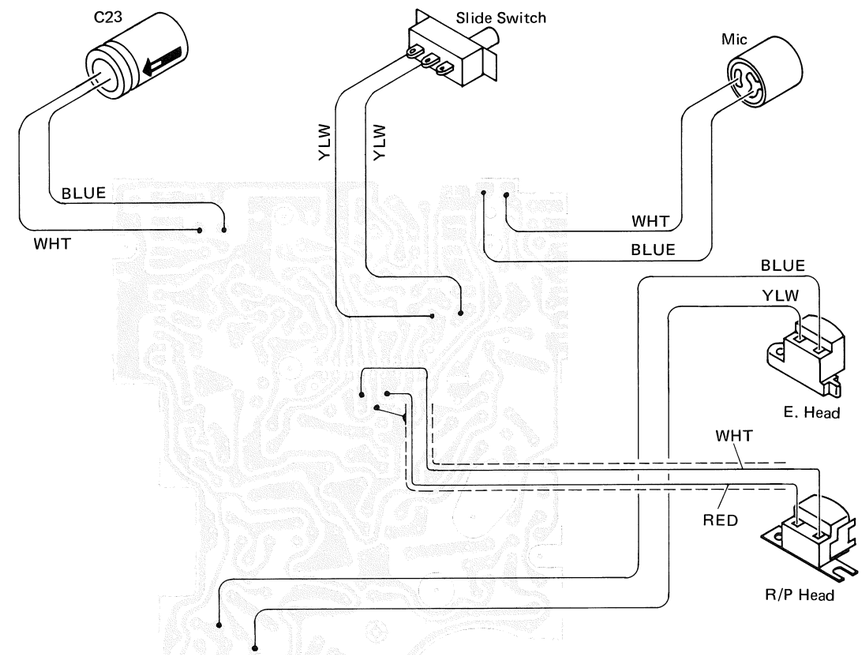

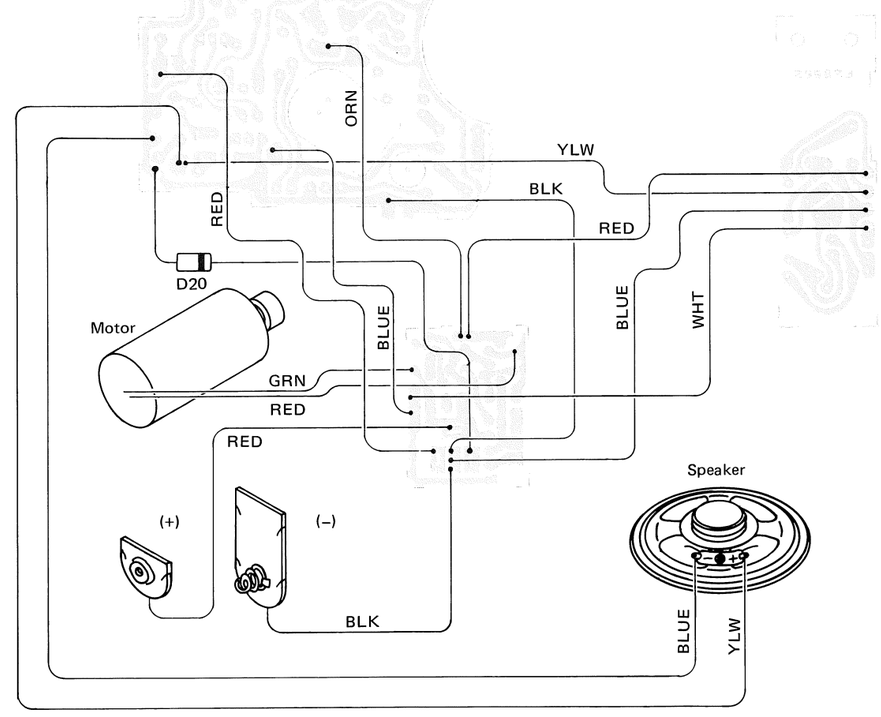

Fig. 24

Schematic Diagram

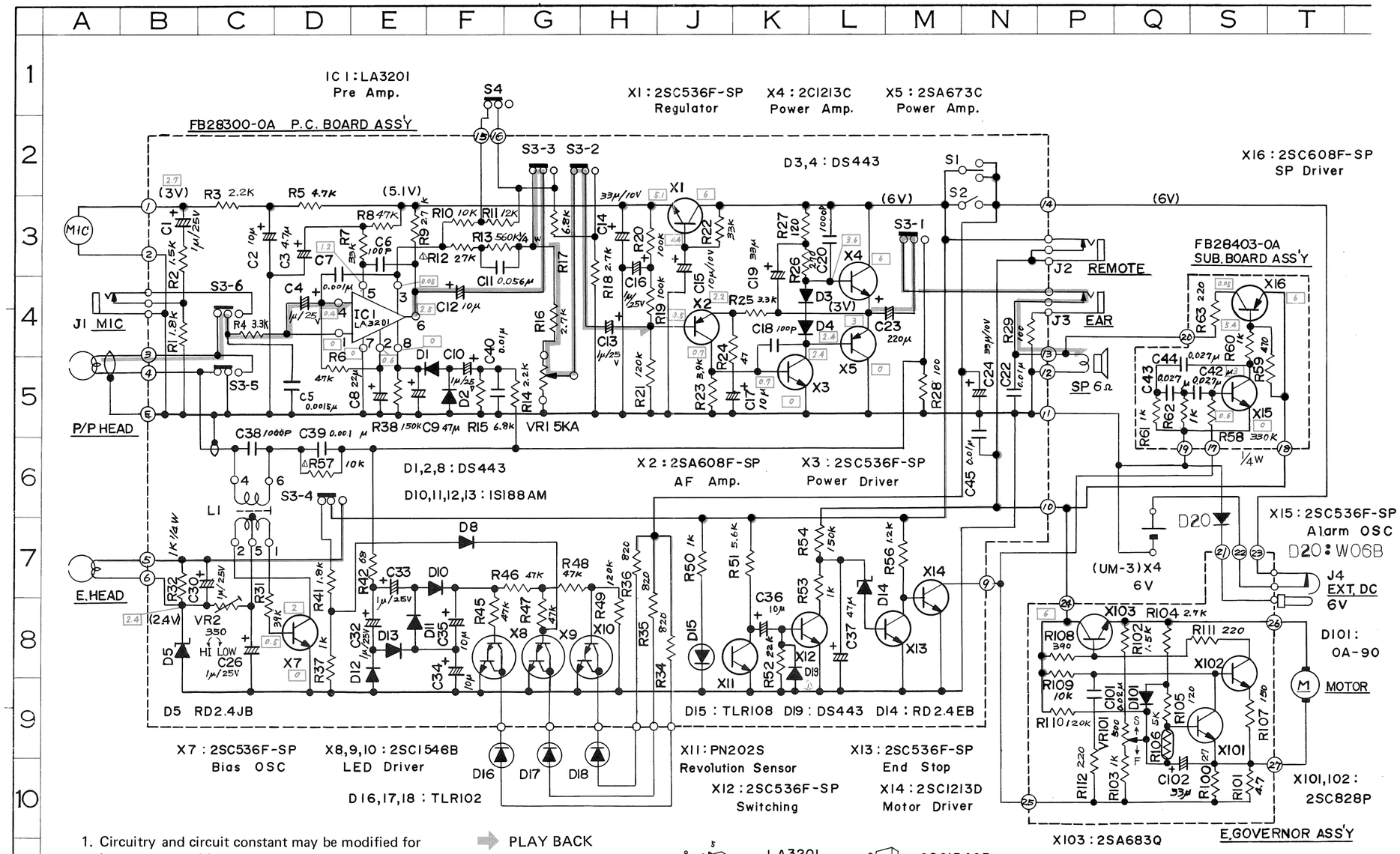

1. Circuitry and circuit constant may be modified for improvement without remark.
2. Indicated voltage is the measurement of tester (inner impedance 20kΩ) at no signal in recording mode.

Switches

S1	Power switch	OFF
S2	FF switch	OFF
S3	Record switch	PB
S4	Record SENS. switch	Norm.

PLAY BACK

RECORD

+B line

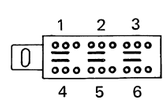

S3 Bottom view

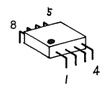

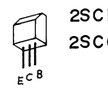

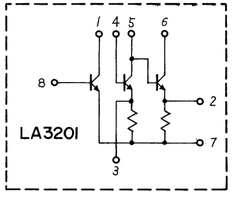

No. 0002

Block Diagram

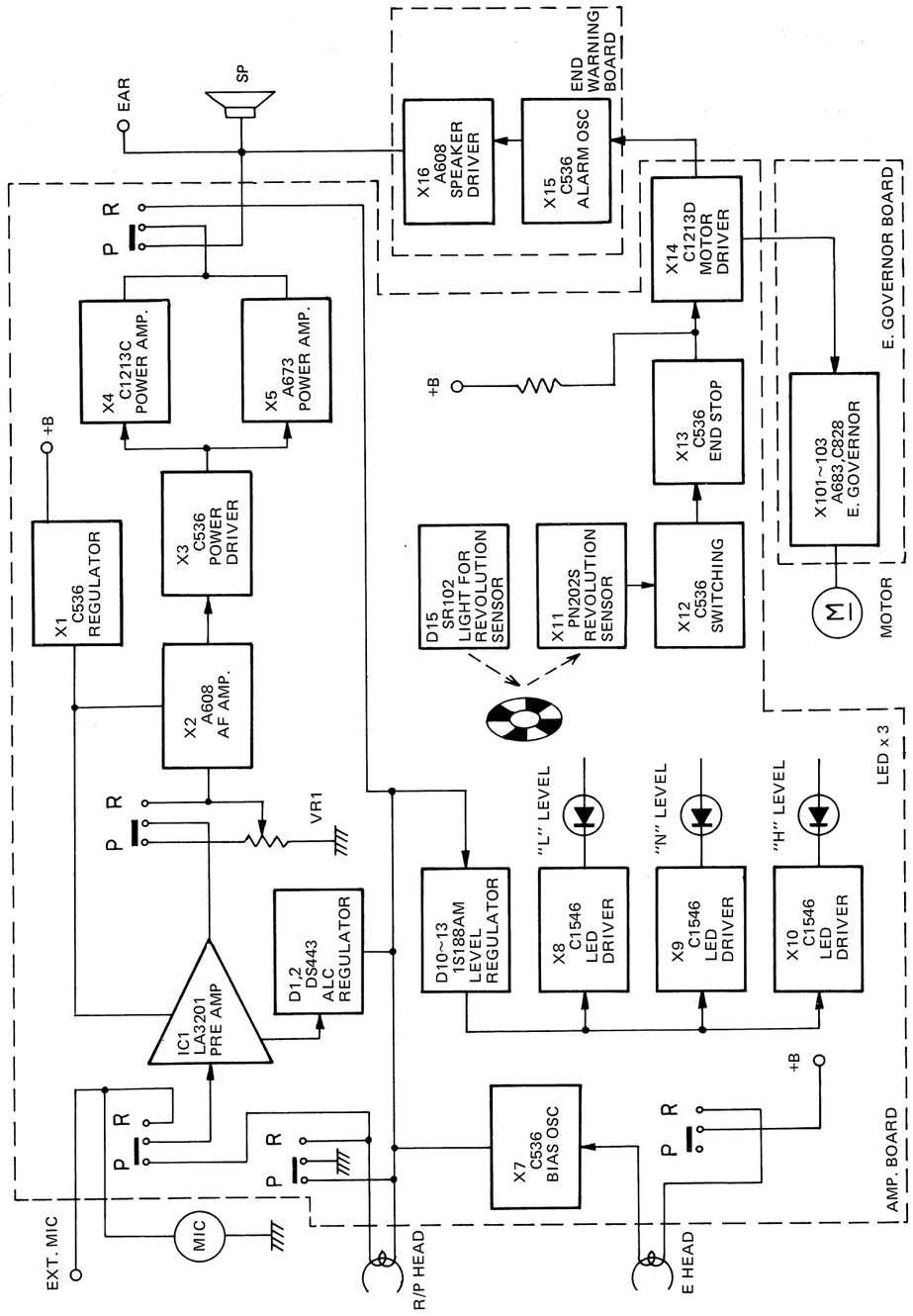

Fig. 23

Mechanical Adjustments and Repairs

1. Head replacement and adjustment

Clean and demagnetize the head and guide each time the machine is serviced. If normal fidelity is not obtainable head replacement is indicated.

Head replacement

1) R/P head

- Remove two wires soldered to head.
- Remove a screw and head nut.
- Then replace head.
- Solder as shown in Fig. 11.

2) Erase head

- Remove two wires soldered to head.
- Remove a screw and replace head.
- Solder as shown in Fig. 11.

Location of heads

The R/P and Erase heads should be positioned as shown in Fig. 13.

Azimuth adjustment of the head should be done according to the following instructions.

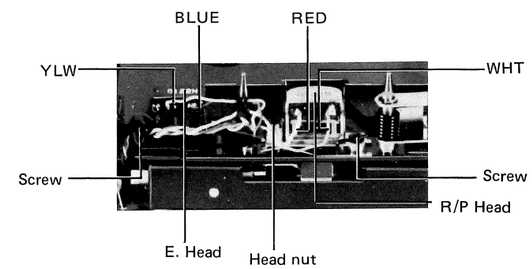

Fig. 11

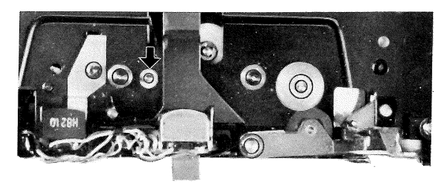

Fig. 12

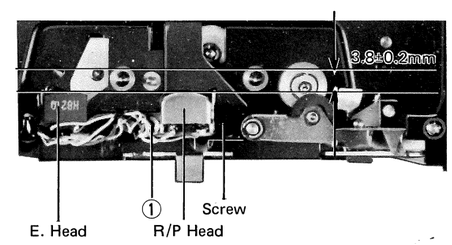

Fig. 13

Azimuth adjustment

1) Plug a cord into the earphone jack (EAR) and connect a 6 ohm resistor (corresponding to a loudspeaker) in parallel with the cord.
2) Connect an oscilloscope or electronic voltmeter across the terminals of the cord.
3) While playing back a test 6.3kHz tape (VTT-651) for azimuth adjustment, adjust head nut ① (Fig. 13) so that the maximum output can be obtained.
4) If no test tape is available, play back a music cassette and adjust for maximum output and clarity in the high frequency range.
5) Be sure to lock the head nut ① with paint after adjustment.

2. Pinch roller arm adjustment (Pressure of pinch roller)

Pressing the pin indicated by the arrow to the play back mode. Fig. 12

Check to see that the gap between the stopper of head base and the pinch roller arm should be within 0.3 to 0.7mm.

If it is beyond the limits, adjust it by bending the part Ⓑ of pinch roller arm as shown in Fig. 14.

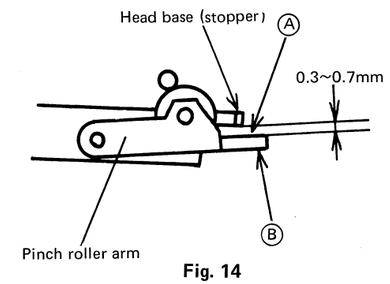

Fig. 14

3. Timing of review action

Move slide control to play (start) position.

Press Review button as far as pin Ⓒ hits the plastic cam Ⓓ.

Check clearance of Ⓔ for idler pressure, and bend Ⓕ so that lid lock plate is kept in place.

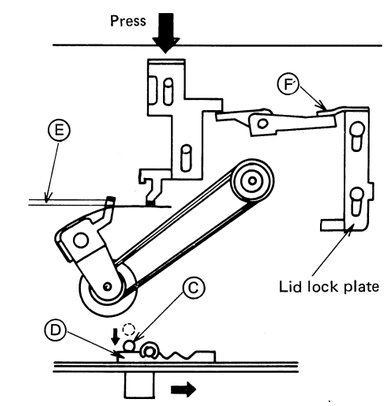

Fig. 15

4. Motor speed adjustment

1) Plug a cord into the earphone jack (EAR) and connect a 6 ohm resistor in parallel with the cord.
2) Connect a frequency counter across the terminal of the cord.
3) While playing back a test 3kHz tape (VTT-656) for motor speed adjustment, adjust VR on the E governor board (see Fig. 16.) so that the frequency counter indicates within 2,970 to 3,060Hz.

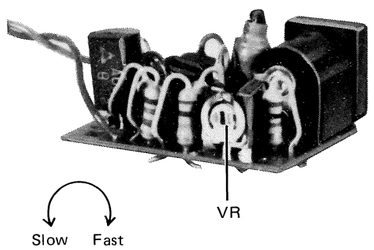

Fig. 16

5. Thrust of Flywheel

The clearance between the top of flywheel shaft and the flywheel holder should be within 0.1 to 0.3mm.
If the clearance is beyond the limits, adjust the screw for normal value.
Note: After adjustment, fix the screw with lock adhesive.

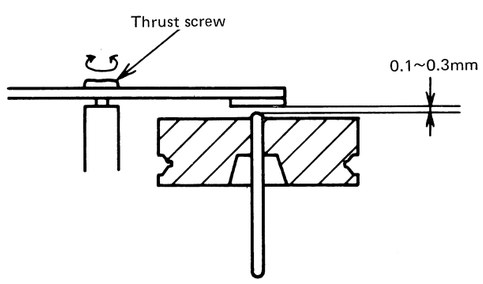

Fig. 17

6. Playback torque Fig. 18

Normal torque : 30~40 gr-cm
If this is not obtainable,
1) Clean drive belt, take-up wheel, and clutch disk tire.
2) Replace clutch disk ass'y. ①
3) Replace take-up wheel. ②
4) Replace drive belt. ③

7. Fast forwarding torque Fig. 18

Normal torque : 60 gr-cm or more
If this is not obtainable,
1) Clean drive belt, idler and clutch disk tire.
2) Replace idler ass'y. ④
3) Replace clutch disk ass'y. ①
4) Replace drive belt. ③

8. Rewinding torque Fig. 18

Normal torque : 40 gr-cm or more
If this is not obtainable,
1) Clean belt, idler and pulley.
2) Replace rewind belt. ⑤
3) Replace idler. ⑥
4) Replace pulley. ⑦

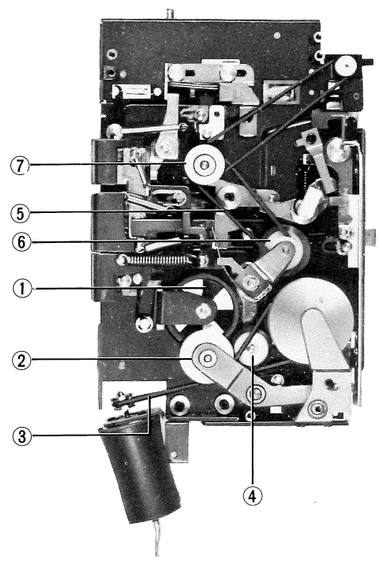

Fig. 18

Adjusting Recording Bias

- Remove red wire soldered to head.
- Connect a resistor of approximately 100Ω to terminal of head and red wire.
- Connect the Electronic Volt Meter (V.T.V.M) to the terminal of head and red wire.
- Set the recorder in the recording mode.
- Adjust the VR2 so that the Electronic Volt Meter (V.T.V.M) indicated 10±1mA.
- After adjustment check that the bias frequency between the frequency counter indicated 40±5kHz.

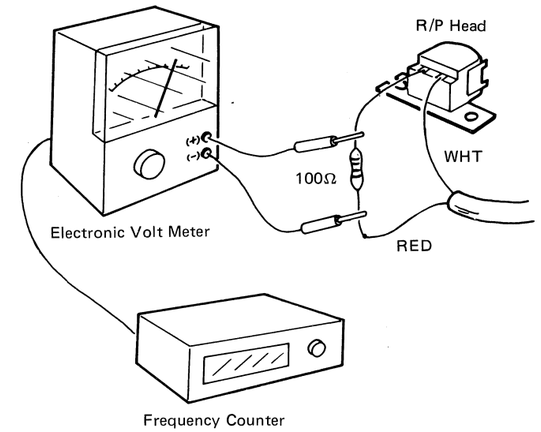

Fig. 22

Cleaning and Lubrication

1. Cleaning

Wipe contamination off the head, capstan, pinch roller and other parts which come in contact with the tape. Dust on the head results in poor sound and ineffective erasing. Use a cloth soaked in alcohol, benzine, trichloroethylene, etc.
Be careful of handling these chemicals as they damage the cabinet.

2. Lubrication

Feed one or two drops of DTE oil or equivalent machine oil to the rewind roller shaft and pinch roller shaft once or twice an year on a normal use basis. Too much oil results in unsmooth rotation.

3. Remarks

Be careful not to apply oil to the rubber or rotating parts of belt, and pinch roller. Wipe off oil with a cloth soaked in alcohol to remove oil etc.

Before Service

Slide control knob does not function.
Is a cassette loaded?

Rec button cannot be pressed.
Is a cassette loaded?
Is the safety tab of the cassette in place?

Slide control knob fails to forward the tape.
Are batteries correctly loaded?
Is battery power sufficient?
Is the tape fully wound to its end?
Is the tape too slack to be wound?

No sound is heard from the speaker.
Is the earphone plugged in?
Is the volume control turned to minimum?

Sound volume is not sufficient or excessive noise is heard.
Is battery power sufficient?
Is the head clean or free from magnetization?
Is the tape not excessively old?

Wow and flutter is increased, tape slows down or is entangled.
Is battery power sufficient?
Are the pinch roller, capstan and head clean?
Is the tape in good enough condition?

Total Assembly

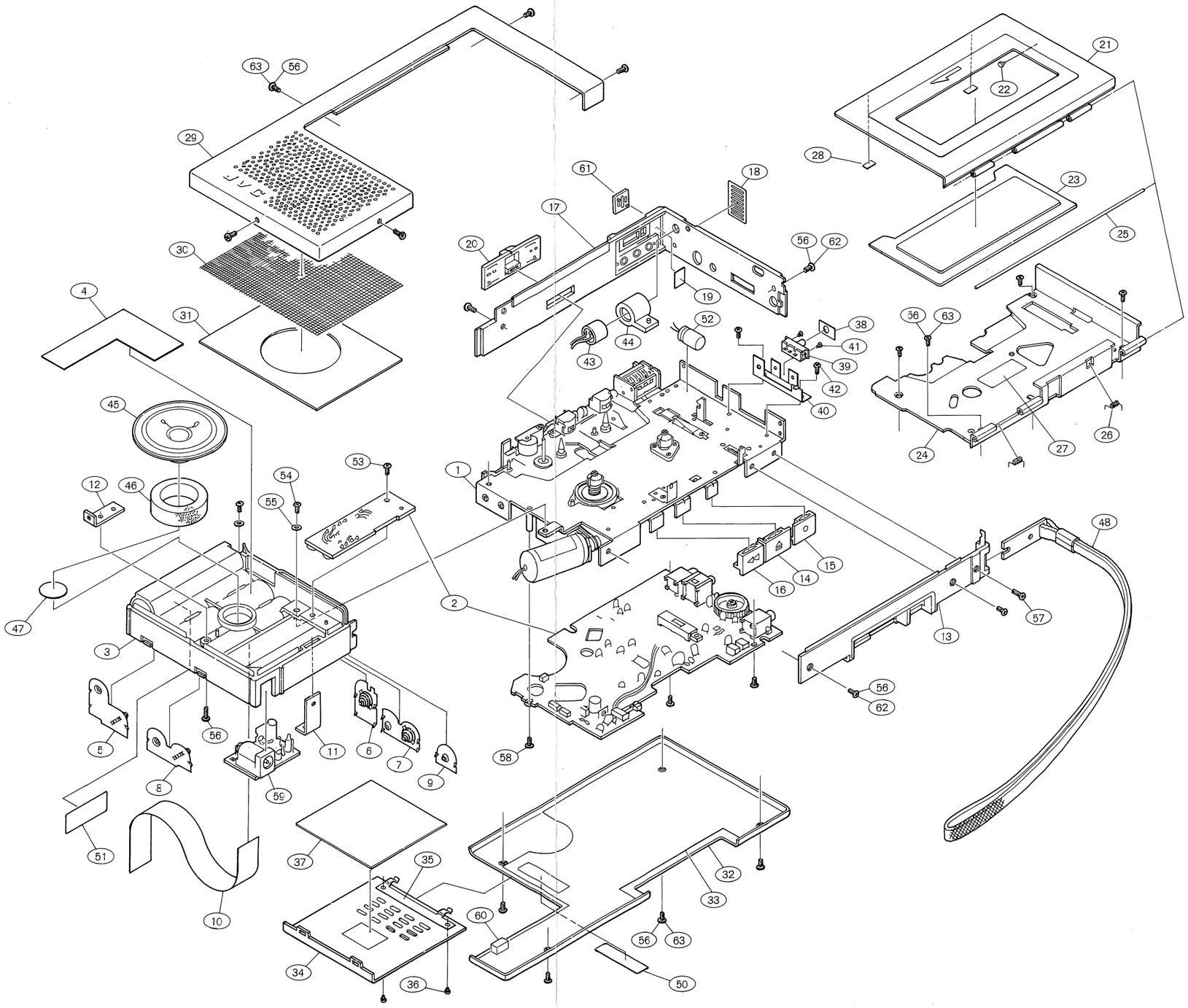

Fig. 27

Parts list of mechanical components

Asterisked parts (*) show new parts.

Ref. No.	Parts No.	Parts Name	Remarks	Q'ty
1	*F28101-0A	Chassis Ass'y		1 set
2	*F28436-01	Cassette Spring		1
3	*SPSK2002M	Screw		9
4	*F28301-0A	Head Base Ass'y		1 set
5	*F28442-0B	Pinch Roller Arm Ass'y		1 set
6	*F28446-01	Pinch Roller Arm Spring		1
7	REE1500	E. Washer		20
8	*F00317-01	R.P. Head		1
9	*F00323-01	E. Head		1
10	*F28447-01	Head Nut		1
11	*SPSK2004M	Screw		1
12	*F00301-17	Tension Spring		1
13	REE2000	E. Washer		3
14	*Q03093-834	Washer		4
15	Q03093-827	Washer		1
16	*F28448-0B	Clutch Disk Ass'y		1 set
17	*F28457-01	Disk Screw		2
18	*F28458-01	Disk Stand		1
19	*F28459-01	Disk Shaft		1
20	*F28460-01	Pulley		1
21	*F28580-01	Reel Feather		1
22	Q03093-825	Washer		2
23	*F28461-0A	Control Plate Ass'y		1 set
24	*F28465-01	Cam Roller		1
25	*F00301-24	Tension Spring		1
26	*F28466-0A	Thrust Plate Ass'y		1 set
27	*F28426-01	Thrust Plate Spring		1
28	*F28470-0A	Flywheel Ass'y		1 set
29	*Q03093-830	Washer		3
30	*F28471-0A	F.W. Holder Ass'y		1 set
31	*SPSK2003M	Screw		3
32	*F28509-01	Review Arm		1
33	*F28510-01	Tortion Spring		1
34	REE2500	E. Washer		1
35	*F28474-0A	Take Up Arm Ass'y		1 set
36	*F28480-02	Take Up Wheel		1
37	*F28583-01	Special Washer		1
38	*F28481-0A	FF Idler Ass'y		1 set
39	*F28553-01	FF Idler Spring		1
40	*F00304-14	Belt	for Flywheel	1
41	*F00322-0A	Motor Ass'y		1 set
42	*F28484-01	Motor Bracket		1
43	*F26449-01	Motor Cushion		2
44	*F00400-09	Metal		2
45	*SPSK2045M	Screw		2
46	*SPSK1703M	Screw		3
47	*F28485-0A	Rewind Arm Ass'y		1 set
48	*F28489-01	Rewind Spring		1
49	*F28490-0A	Rewind Idler Ass'y		1 set
50	*F00304-15	Belt	for Rewind	1
51	*F28492-0B	Open Lever Ass'y		1 set
52	*F00301-18	Tension Spring		1
53	*F00301-19	Tension Spring		1
54	*F28496-01	Rec. Lock Plate		1
55	*F00301-20	E. Washer		1
56	*F28497-0A	Rec. Lever Ass'y		1 set
57	*F00301-21	Tension Spring	for Rec. Lever	1
58	*F28499-01	Open Arm		1
59	*F00301-20	Tension Spring	for Rec. Lock	1
60	*F00301-23	Tension Spring	for Eject Lever	1
61	*F28500-01	Eject Bracket		1
62	*F28501-01	Eject Lever		1
63	*F28508-01	Spring		1
64	*F00319-01	Tape Counter		1
65	*F00304-16	Belt	for Tape Counter	1
66	*F28502-0A	Receder Ass'y		1 set
67	*F00400-08	Collar		1
68	*F28504-01	Spring Plate		1
69	*F28505-0A	FF Lever Ass'y		1 set
70	*F28511-01	FF Spring		1
71	*F28514-01	Switch Lever		1
72	*SPSK1402M	Screw		1
73	*SPSK2016N	Screw		1
74	*F28581-01	Wire Clamp		1
75	QXTV200-007	Vinyl Tube		1
76	WNS2000N	Washer		1
77	*Q03093-838	Washer		1

Mechanical Components

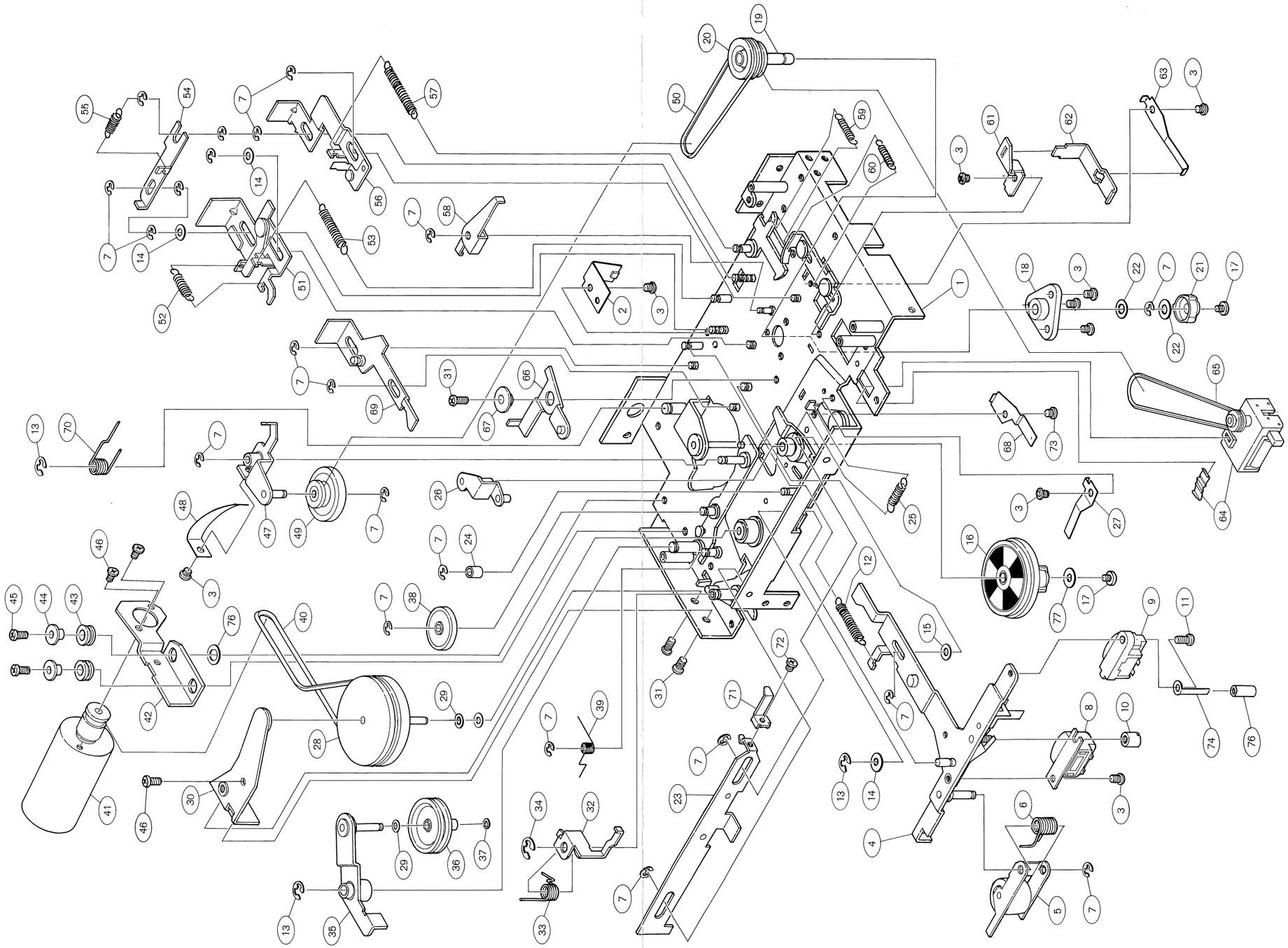

Fig. 26

Parts list of circuit board

Asterisked parts (*) show new parts.

Ref. No.	Parts No.	Parts Name	Remarks	Q'ty
S1	*F28307-02	Leaf Switch	Play, Rewind	1
S2	*F28307-01	Leaf Switch	FF	1
S3	*QSS0040-002	Slide Switch	R/P	1
J1,3	*QMS3501-015	Jack Ass'y	MIC, Earphone	2
J2	*QMS2501-101	Jack Ass'y	Remote	1
IC1	*LA3201	IC		1
X1,3,7,12,13,15	*2SC536F-SP	Transistor		6
X2,16	*2SA608F-SP	〃		2
X4	2SC1213C	〃		1
X5	2SA673C	〃		1
X8~10	*2SC1546B	〃		3
X11	PN202S	Photo Transistor		1
X14	2SC1213D	Transistor		1
D1~4,8,19	*DS443	Diode		6
D5	*RD2.4JB	Zener Diode		1
D10~13	1S188AM	Diode		4
D14	*RD2.4EB	Zener Diode		1
D15	*TLR108	LED		1
D16~18	TLR102	〃		3
VR1	*QVZ3007-001	V. Resistor	Volume	1
VR2	*QVZ3235-351	〃	Bias	1
C1,4,10,13,16,26, 30,32,33	*QEE41EM-105B	T.S.E. Capacitor	1μF 25V	9
C2,12,17,34~36	*QEE40JM-106B	〃	10μF 6.3V	6
C3	* 〃 -475B	〃	4.7μF 〃	1
C8	* 〃 -226B	〃	22μF 〃	1
C9,37	* 〃 -476B	〃	47μF 〃	2
C19	* 〃 -336B	〃	33μF 〃	1
C14,24	*QEE41AM-336B	〃	33μF 10V	2
C15	* 〃 -106B	〃	10μF 〃	1
C7,20	*QCZ0108-102	F.C. Capacitor	1000pF 50V	2
C5	* 〃 -152	〃	1500pF 〃	1
C22,40,45	* 〃 -103	〃	0.01μF 〃	3
C42~44	* 〃 -273	〃	0.027μF 〃	3
C6,18	*QCY41HK-101	〃	100pF 〃	2
C38	〃 -102	〃	1000pF 〃	1
C11	QFM41HK-562	M. Capacitor	5600pF 〃	1
C39	〃 -102	〃	1000pF 〃	1
R1,41	*QRD183J-182B	C. Resistor	1.8kΩ 1/8W	2
R4	* 〃 -332B	〃	3.3kΩ 〃	1
R10	* 〃 -103B	〃	10kΩ 〃	1
R11	* 〃 -123B	〃	12kΩ 〃	1
R12	* 〃 -273B	〃	27kΩ 〃	1
R16	* 〃 -272B	〃	2.7kΩ 〃	1
R19	* 〃 -104B	〃	100kΩ 〃	1
R21	* 〃 -124B	〃	120kΩ 〃	1
R29	* 〃 -101B	〃	100Ω 〃	1
R35,36	* 〃 -821B	〃	820Ω 〃	2
R37	* 〃 -102B	〃	1kΩ 〃	1
R23	* 〃 -392B	〃	3.9kΩ 〃	1
R2	*QRD181J-152B	〃	1.5kΩ 〃	1
R3,14	* 〃 -222B	〃	2.2kΩ 〃	2
R5,8	* 〃 -472B	〃	4.7kΩ 〃	2
R6,45,46,47,48	* 〃 -473B	〃	47kΩ 〃	5
R7,22	* 〃 -333B	〃	33kΩ 〃	2

Ref. No.	Parts No.	Parts Name	Remarks	Q'ty
R9,18	*QRD181J-272B	C. Resistor	2.7kΩ 1/8W	2
R15,51	* 〃 -562B	〃	5.6kΩ 〃	2
R17	* 〃 -682B	〃	6.8kΩ 〃	1
R20	* 〃 -104B	〃	100kΩ 〃	1
R24	* 〃 -470B	〃	47Ω 〃	1
R25	* 〃 -392B	〃	3.9kΩ 〃	1
R26	* 〃 -271B	〃	270Ω 〃	1
R27	* 〃 -121B	〃	120Ω 〃	1
R28	* 〃 -101B	〃	100Ω 〃	1
R31	* 〃 -393B	〃	39kΩ 〃	1
R38,54	* 〃 -154B	〃	150kΩ 〃	2
R57	* 〃 -103B	〃	10kΩ 〃	1
R34	* 〃 -821B	〃	820Ω 〃	1
R42	* 〃 -680B	〃	68Ω 〃	1
R49	* 〃 -124B	〃	120kΩ 〃	1
R50,53,60,61,62	* 〃 -102B	〃	10kΩ 〃	5
R56	* 〃 -122B	〃	12kΩ 〃	1
R63	* 〃 -221B	〃	220Ω 〃	1
R59	* 〃 -471B	〃	470Ω 〃	1
R52	* 〃 -223B	〃	22kΩ 〃	1
R13	*QRD141J-564SL	〃	560kΩ 1/4W	1
R32	* 〃 -102	〃	10kΩ 〃	1
R58	* 〃 -334SL	〃	330kΩ 〃	1
L1	*F28317-01	OSC. Coil		1
	*F28566-02	Volume Control Knob	for VR1	1
	*SPSK1703M	Screw		1
	*WSB2000N	Washer		2
	*F00414-01	Lug		1

Technical Information

1. Stand-by mechanism

When the unit is not loaded with a cassette, the slide control knob (3) is immovable since the pin (1) is engaged within the cam (2). Loading a cassette properly depresses the thrust pin (4) which in turn releases pin (5) permitting the head base (6) to move forward so the head can make contact with the tape.
However, the tape is not transportable in this mode since the pinch roller and the capstan (9) are not making actual contact because the S. S. plate (7) is holding back the pinch roller arm (8). This is to say that the stand-by mode is now in effect.
Pushing the slide control knob up towards the PLAY position, will commence running of the tape.
When the cassette is being ejected, the pressing of the eject button pushes backward the head base and pin (4) is pressed inwards by the spring (10) and the head base automatically returns to its original position. Continuing to press the eject button in this manner will raise the eject lever (11) and permit the cassette to be withdrawn. Press to lock the REC button and push the slide control knob up towards the PLAY/REC position to start the tape.
Then the tape will start running for recording.
Pushing the slide control knob down towards the STOP position only stops the tape transport leaving the record button in its locked position.
This is the same as a conventional pause mode.
In order to release the REC button, push the slide control knob down towards the REW/REC OFF position or press the eject button. Pressing the REC button during playback, can change the playback mode directly into the recording mode.

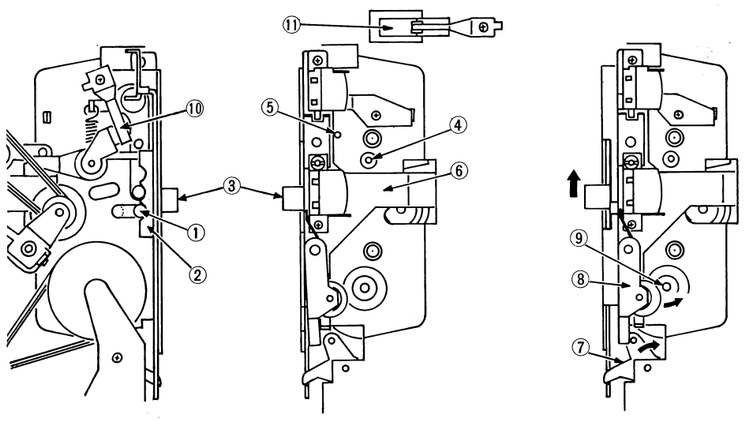

Fig. 19

2. Circuit for auto-stop and tape-end warning

This recorder is equipped with a mechanism in which the motor automatically stops and a warning signal becomes audible from the speaker soon after the tape reaches to its end in any mode. The tape-end is automatically detected by the take-up disc signalling the tape's completion.
A reflection plate alternately colored silver and black as shown in illustration is placed on the under surface of the take-up disc. After the power is turned on, the LED (D15) lights and illuminates this reflecting plate. The photo transistor X11 is placed to the side of the LED and the impedance across its collector and emitter varies in proportion to the amount of reflection from the reflecting plate, thus varying its collector voltage. When the reel disc stops, the amount of reflection ceases to vary and likewise the collector voltage at X11 will become stable.
X12 is a switching transistor and is biased to be turned on by the charging current which flows to C36 through R51 when the collector voltage at X11 increases in the positive direction from 0. Therefore, while the take-up disc is rotating, X12 continues to be turned on and off alternately. When the take-up disc ceases to rotate, X12 comes to be turned off.
On the other hand, after the power is turned on, X14 is biased and turned on through R56 and the motor starts rotating since the negative pole in the motor governor is earthed. At the same time, C37 is charged through R54 and its voltage across terminals tends to increase gradually.

However, as mentioned above, since X12 continues to be turned on and off alternately during rotation of the take-up disc, C37 is immediately discharged through R53 and X12.
When the tape reaches to its end and the take-up disc stops rotating, X12 is already turned off and the voltage between C37 terminals gradually increases. Then, when the voltage sufficiently increases to about 2.7V, X13 is biased and turned on through the zener diode D14. As a result, X13 earthes X14's a base and X14 is no longer biased but turned off, thereby halting the motor. At this time, the collector voltage at X14 increases to correspond to the power supply voltage, switching on the oscillator circuit and producing the warning tone from the speaker.

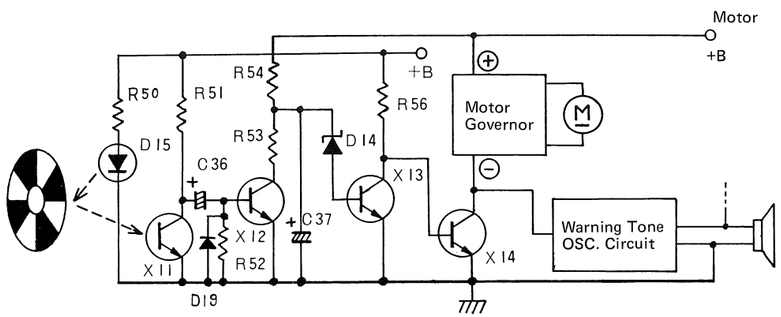

Fig. 20

3. Circuit for 3-LED's level indicators and battery checker

This recorder is equipped with 3-LED's indicators that function as level indicators during recording and as a battery checker during playback.
The recording signal from the main amplifier, during recording, is converted into direct current through R42 and the quadrupled voltage rectifier circuit composed of C32 – C35 and D10 – D13.
Then the direct current, proportional to this signal, flows through the attenuator composed of R45 – R49 and applied to transistors X8 – X10, resulting in the lighting of the LEDs according to their specific lighting levels.
In the cases of modes other than stop or recording, a voltage in proportion to the power supply voltage produced through R41 and R37 is applied to X9 through D8. When the power supply voltage is more than 4.2V (±0.2V), X9 is turned on and the LED of N (D17) lights.

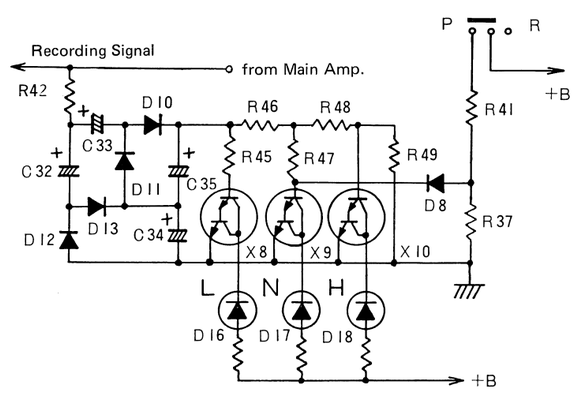

Fig. 21

Schematic Diagram

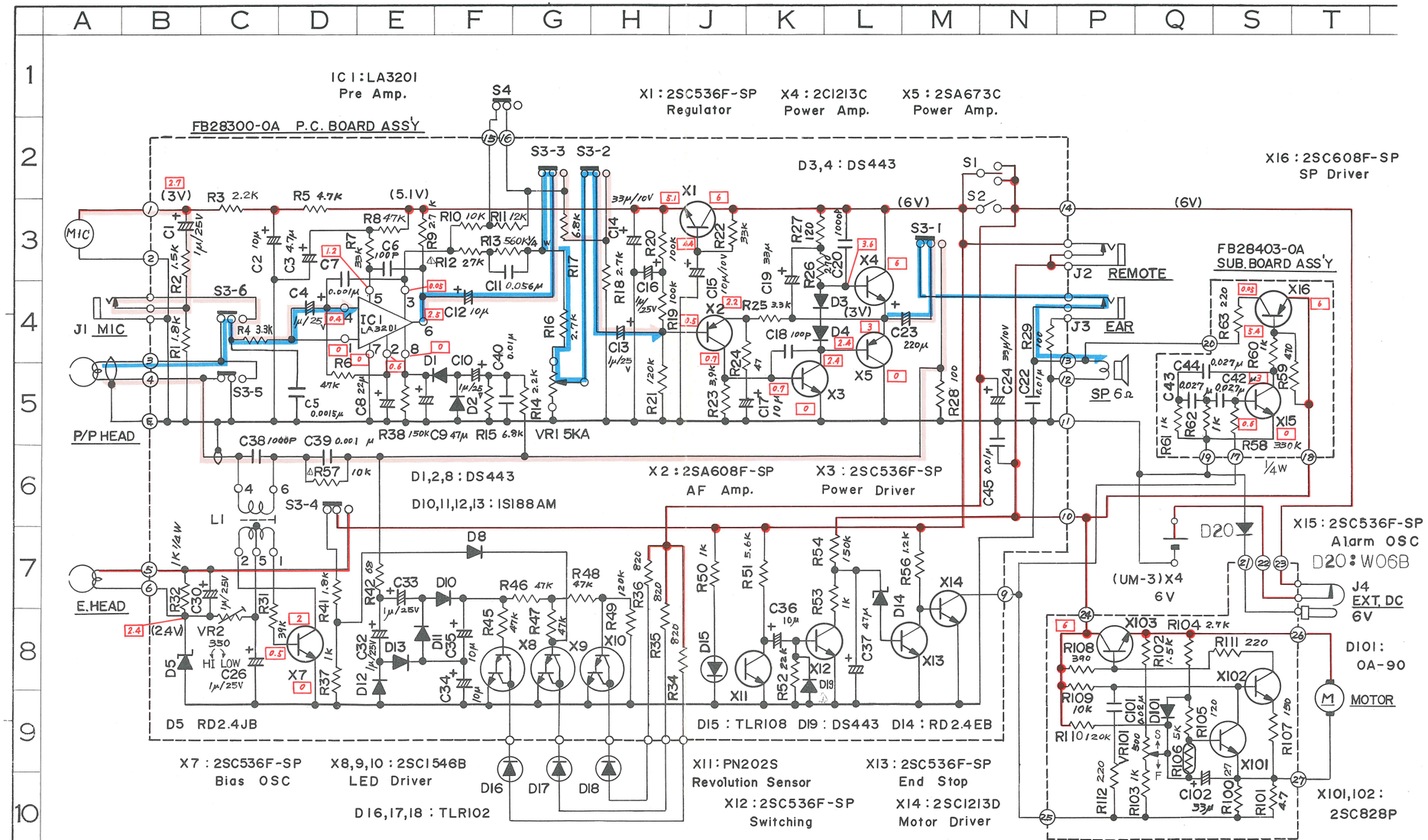

1. Circuitry and circuit constant may be modified for improvement without remark.
2. Indicated voltage is the measurement of tester (inner impedance 20kΩ) at no signal in recording mode.

Switches

S1	Power switch	OFF
S2	FF switch	OFF
S3	Record switch	PB
S4	Record SENS. switch	Norm.

PLAY BACK
RECORD
+B line

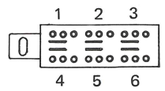

S3 Bottom view

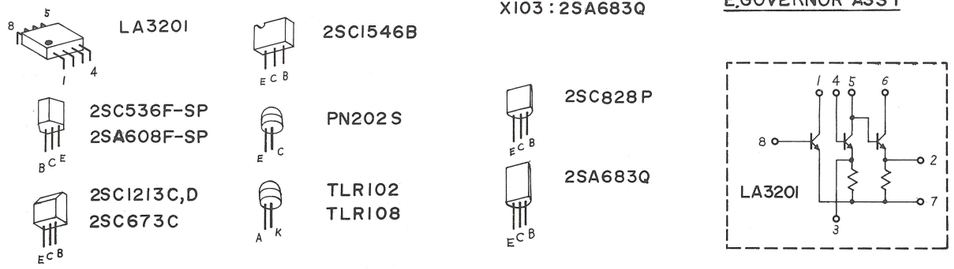

No. 0002

Circuit Board Parts

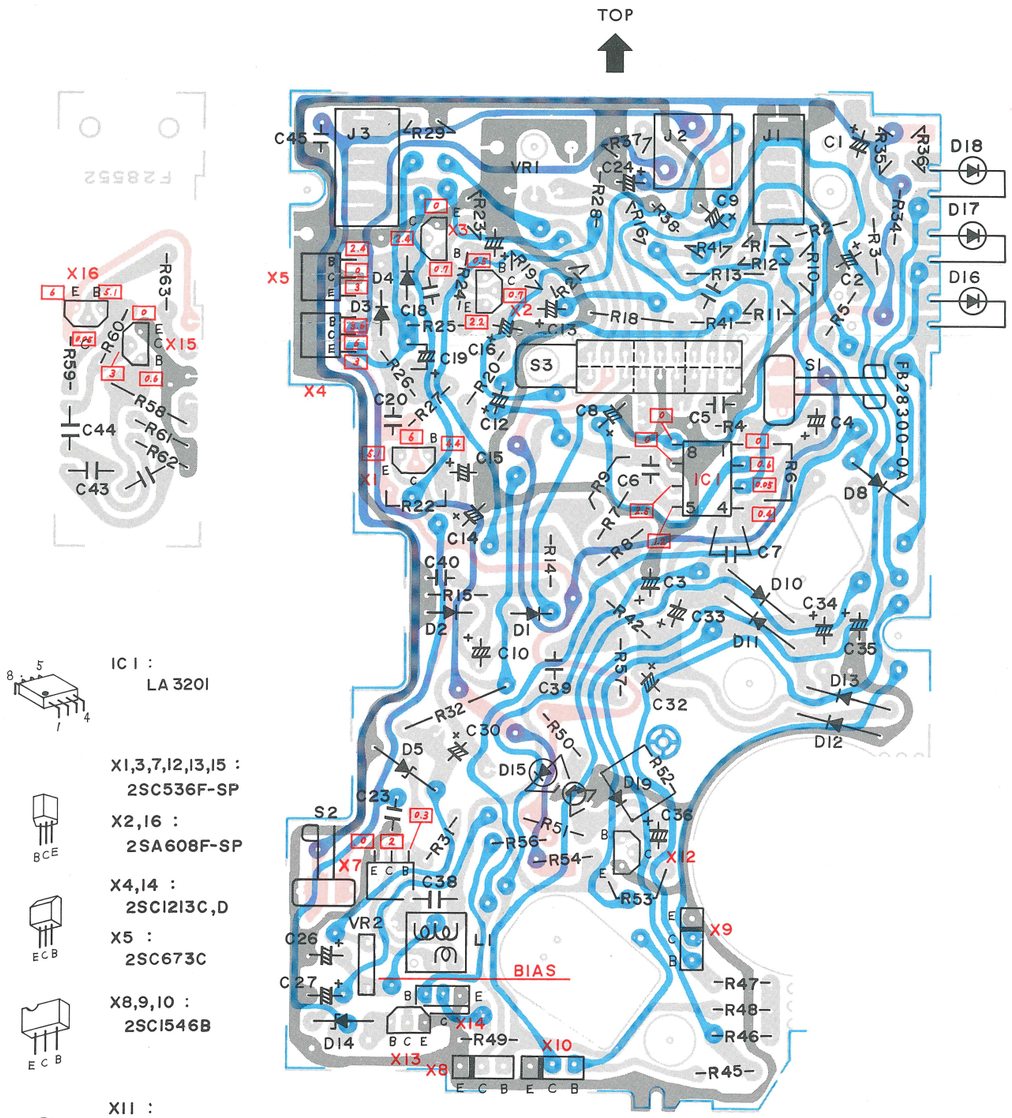

Fig. 25

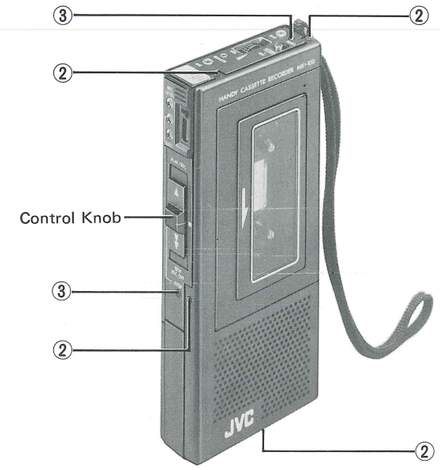

Fig. 2

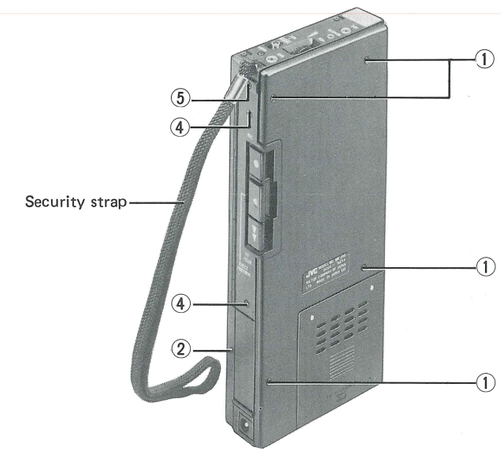

Fig. 3

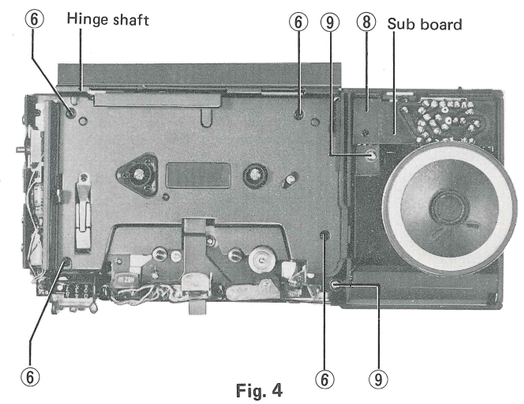

Fig. 4

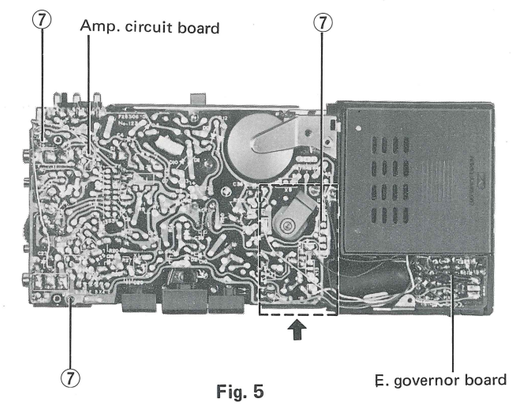

Fig. 5

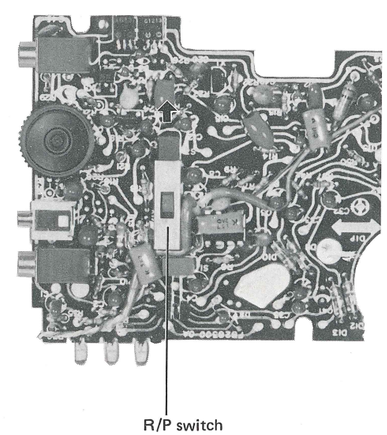

Fig. 6

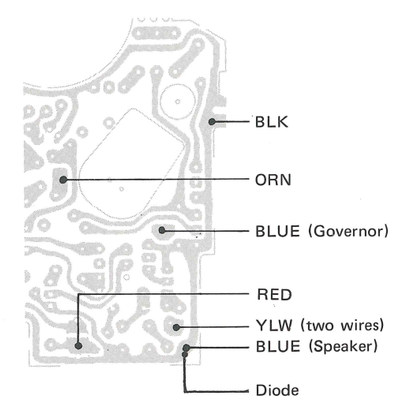

Fig. 7