ASTOR

ASTOR ELECTRONICS PTY. LTD.

DIVISION OF ELECTRONIC INDUSTRIES LTD., BOX 183, P.O. SOUTH MELBOURNE

Reg. Office: Astor House, 161-173 Sturt St., South Melbourne.

File: Receivers AC

Date: 12.10.69

Page: 1.

ASTOR MODEL "MDO24"

7 TRANSISTOR BROADCAST BAND

MAINS OPERATED MANTEL RECEIVER

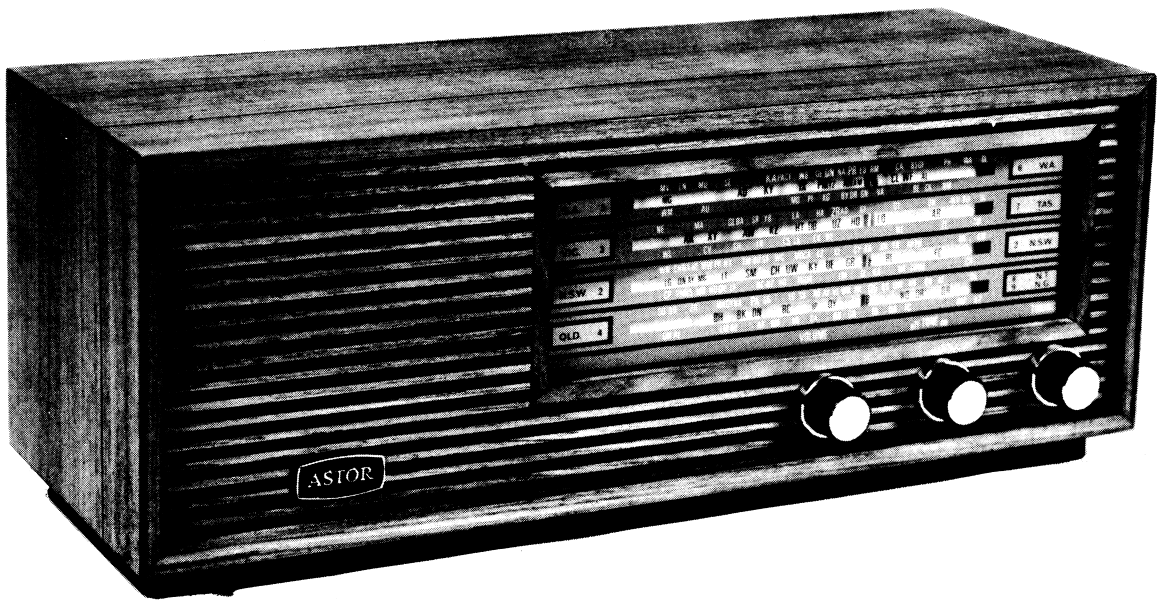

Tuning Range:	525-1610KHz
Intermediate Frequency:	455KHz
Power Output:	2 Watts
Current Consumption:	12 Watts approx.
Supply Source:	240 Volts. 50Hz

ACCESS TO INTERIOR

Remove two screws from rear of cabinet and remove cabinet back.

CHASSIS SERIAL NUMBER

Remove cabinet back. Number is stamped into rear of metal chassis above power cord entry.

CAUTION

Disconnect receiver power lead plug from mains socket before making adjustments inside the cabinet.

Information contained herein must not be reproduced without prior written permission from Astor Electronics Pty. Ltd.

AUDIO MODULE PART NO. 4067-007-01

CIRC. NO.	VALUE	CAPACITORS DESCRIPTION	TOL ±	RATING V.DCW.	PART NUMBER
1	.15uF	Polyester	10 %	160	4009-020-04
2	10uF	Electrolytic		16	4005-007-19
3	200uF	Electrolytic		10	4005-006-14
4	470pF	Ceramic, disc	20%	500	4008-052-08
5	400uF	Electrolytic		10	4005-042-07
6					
7					
8					

CIRC. NO.	VALUE	RESISTORS DESCRIPTION	TOL ±	RATING WATTS	PART NUMBER
9	3.3K	Carbon	10%	.5	4022-006-01
10	1.2M	Carbon	5%	.5	4022-064-08
11	2.2M	Carbon	5%	.5	4022-036-02
12	47	Carbon	5%	.5	4022-041-11
13	150K	Carbon	10%	.5	4022-038-01
14	12K	Carbon	10%	.5	4022-029-01
15	820	Carbon	10%	.5	4022-009-01
16	4.7K	Carbon	5%	.5	4022-005-15
17	100	Potentiometer, Quiescent Current Adj.			4025-031-03
18	50	N.T.C.			4021-069-03
19	1	Wire Wound	10%	.5	4024-008-02
20	1	Wire Wound	10%	.5	4024-008-02
21	680	Carbon	10%	.5	4022-028-02
22					
23					
24					

CIRC. NO.	MISCELLANEOUS	PART NUMBER
25	Transistor - type AT327	4128-125-01
26	Transistor - type AT415	4128-183-01
27	Transistor - type AC187) matched	4128-107-01
28	Transistor - type AC188) pair	

PART NUMBER	MECHANICAL
7111-007-01	Heat Sink (2) output transistors
7167-058-01	Pin (7) board terminations
7120-026-01	Insulator (5) glass, transistor mount

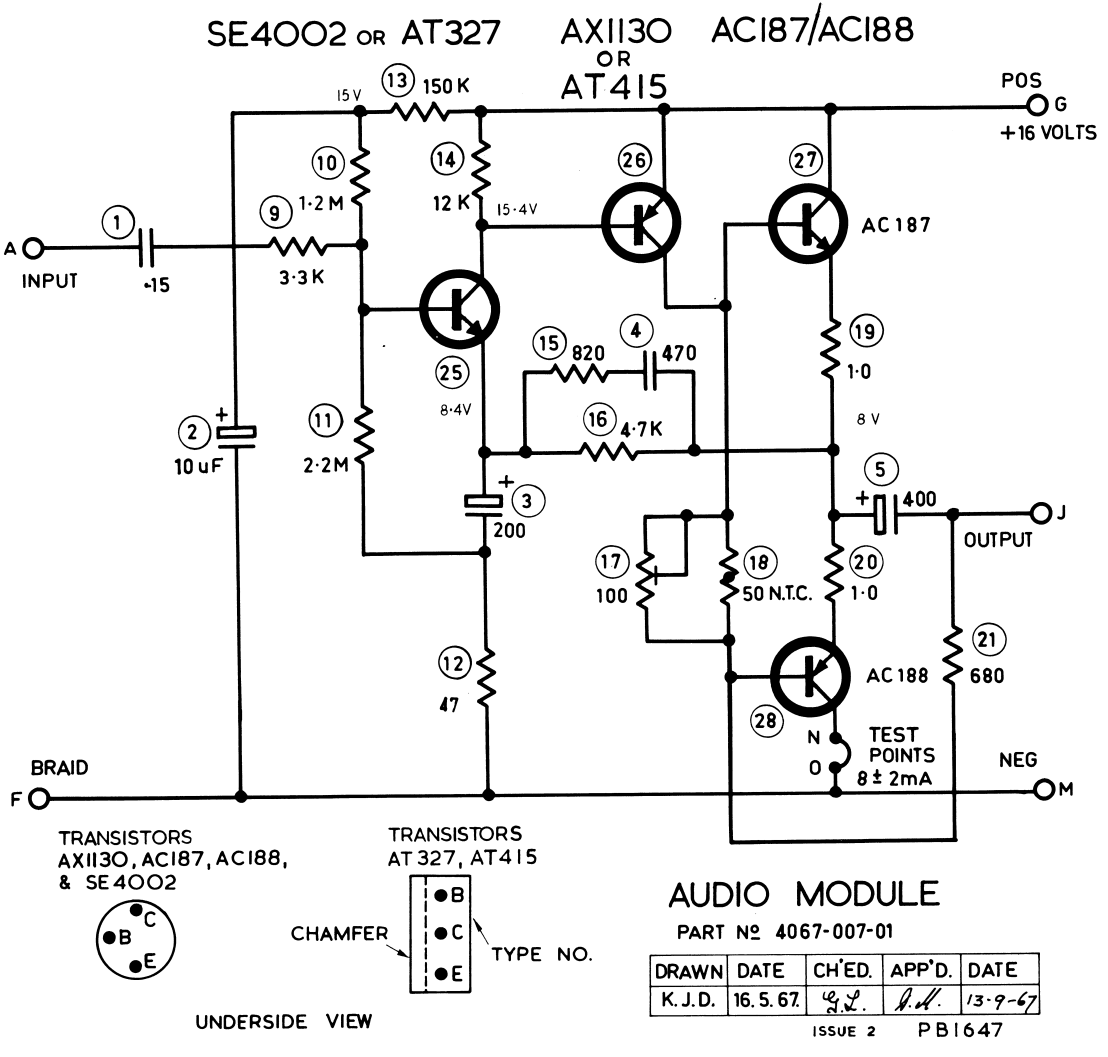

AUDIO MODULE

PART № 4067-007-01

DRAWN	DATE	CH'ED.	APP'D.	DATE
K.J.D.	16.5.67.	G.L.	J.H.	13-9-67

ISSUE 2 PB1647

Oper. No.	Connection	Frequency	Instructions
1.	Refer Para. A. & B.	525KHz	Tuning capacitor plates fully meshed against end of travel stop. Adjust oscillator coil iron core and rod aerial adjusting ring for maximum output.
2.	As Oper. 1	1610KHz	Set tuning pointer to 1610KHz spot on dial. Adjust oscillator and aerial trimmer capacitors for maximum output.
3.	As Oper. 1	600KHz	Tune receiver to generator signal and adjust rod aerial adjusting ring for maximum output.
4.	As Oper. 1	1400KHz	Tune receiver to generator signal and adjust aerial trimmer capacitor for maximum output.

ADJUSTMENT OF COLLECTOR CURRENT

This should be performed after a driver module or output transistors or associated componentry have been replaced.

Equipment : Current meter - 0-50mA D.C. terminated with lead and socket assy. Part No. 4078-018-01, positive terminal to red sleeve.

Conditions : Volume control set at minimum.
No input signal.
Speaker connected.

Remove link from pins "O" and "N" on Driver module board. Place meter lead socket on to test pins "O" and "N". Connector with red sleeving is to be connected to pin "N".

Adjust 100 ohm potentiometer circuit No. 17 until a meter reading of 8mA ± 2mA is indicated. Remove meter lead plug and reconnect link to test pins.

REMOVAL OF CHASSIS

Remove control knobs.
Remove cabinet back.
Remove three screws from bottom of cabinet.
Ease chassis out of cabinet then disconnect leads from speaker.
Refitting is reverse procedure of removal.

DIAL GLASS REPLACEMENT

The dial glass is secured by two brackets fastened to the cabinet by four wood screws. A piece of thin cardboard must be fitted between the dial glass and metal brackets.

ALIGNMENT EQUIPMENT

Signal Generator	-	modulated 400Hz
Output Meter	-	8 ohms impedance
Generator Series Capacitor	-	for I.F.T. alignment, .1uF Part No. 4009-008-20
I.F. Attenuator	-	Part No. 4121-014-01 - to be inserted between pins "X" and "Y" if required during alignment.

Alignment Tools

(a) Flat metal blade each end - Part No. 4121-001-01 for I.F.T. and osc. coil iron core adjustment.

(b) Chisel point type - Part No. 4121-005-01 for trimmer capacitor adjustment.

ALIGNMENT CONDITIONS

Volume Control	-	fully clockwise
Tone Control	-	fully clockwise
Output Level	-	50 milliwatts
Output Meter Connection	-	to amplifier output, speaker disconnected
Supply Voltage	-	240 Volt - 50 Hz.

INTERMEDIATE FREQUENCY TRANSFORMER ALIGNMENT

Set tuning control to high frequency end of travel. Insert .1uF capacitor in series with generator "hot" lead.

Oper. No.	Connection	Frequency	Instructions
1.	To pin "C" on "IF" Circuit Board	455KHz	Adjust iron core of 3rd IF trans. for maximum output.
2.	As Oper. 1	455KHz	Adjust iron core of 2nd IF trans. for maximum output.
3.	As Oper. 1	455KHz	Adjust iron core of 1st IF trans. for maximum output.

SETTING DIAL POINTER

Locate and attach dial reading sheet to dial background. Turn tuning spindle until tuning capacitor plates are fully in mesh. Slide pointer along cord until the pointer aligns with the end of travel spot on dial reading sheet. Align pointer to dial reading after refitting chassis to cabinet.

BROADCAST ALIGNMENT

A. To inject a signal into the receiver connect 2ft. of aerial wire to the "hot" terminal of signal generator. Fashion wire into a vertical position.

B. Place receiver so that ferrite aerial is uppermost and horizontal. Tuning end of receiver is to be toward but not less than one foot from generator aerial wire.

R.F. MODULE. Part No. 4067-002-01

Circuit No.	Value	Capacitors Description	Tol ±	Rating V.DCW	Part Number
1	.01uF	Disc Ceramic		25	4008-039-06
2	.01uF	Disc Ceramic		25	4008-039-06
3	220pF	Polystyrene	5%	100	4004-005-03
4	.022uF	Disc Ceramic		25	4008-010-05
5	10uF	Electrolytic		6	4005-007-12
6	.022uF	Disc Ceramic		25	4008-010-05
7	.022uF	Disc Ceramic		25	4008-010-05
8	220pF	Polystyrene	5%	100	4004-005-03
9	.1uF	Disc Ceramic		25	4008-004-04
10					
11	.1uF	Disc Ceramic		25	4008-004-04
12	.022uF	Disc Ceramic		25	4008-010-05
13	.022uF	Disc Ceramic		25	4008-010-05
14	.022uF	Disc Ceramic		25	4008-010-05
15	100pF	Ceramic	5%	500	4008-006-11
16	220pF	Polystyrene	5%	100	4004-005-03
17	100pF	Ceramic	5%	500	4008-006-11
18	.22uF	Disc Ceramic		25	4008-053-01
19	80uF	Electrolytic		25	4005-030-03
20					
21	100pF	Ceramic		25	4008-006-11
22	.01uF	Disc Ceramic		25	4008-039-06
23					
24					

Circuit No.	Value Ohms	Resistors Description	Tol ±	Rating Watts	Part Number
25					
26	47K	Carbon	10%	½	4022-051-03
27	10K	Carbon	10%	½	4022-004-01
28	2.7K	Carbon	10%	½	4022-043-01
29	120K	Carbon	10%	½	4022-031-01
30	10K	Carbon	10%	½	4022-004-01
31	560	Carbon	10%	½	4022-010-01
32	1K	Carbon	10%	½	4022-008-01
33	10K	Carbon	10%	½	4022-004-01
34	100K	Carbon	10%	½	4022-013-02
35	1K	Carbon	10%	½	4022-008-01
36					
37	2.2K	Carbon	10%	½	4022-021-02
38	4.7K	Carbon	10%	½	4022-005-01
39	33K	Carbon	10%	½	4022-059-03
40					
41	68	Carbon	10%	½	4022-024-01
42	820	Carbon	10%	½	4022-009-01
43	1K	Carbon	10%	½	4022-008-01
44	330K	Carbon	10%	½	4022-047-01
45	150K	Carbon	10%	½	4022-038-01
46	27K	Carbon	10%	½	4022-073-01
47					
48					
49					

END OF TRAVEL

KHz		1600		1400		1200		1000		800		600	525 KHz

END OF TRAVEL

KHz		1600		1400		1200		1000		800		600	525 KHz

END OF TRAVEL

KHz		1600		1400		1200		1000		800		600	525 KHz

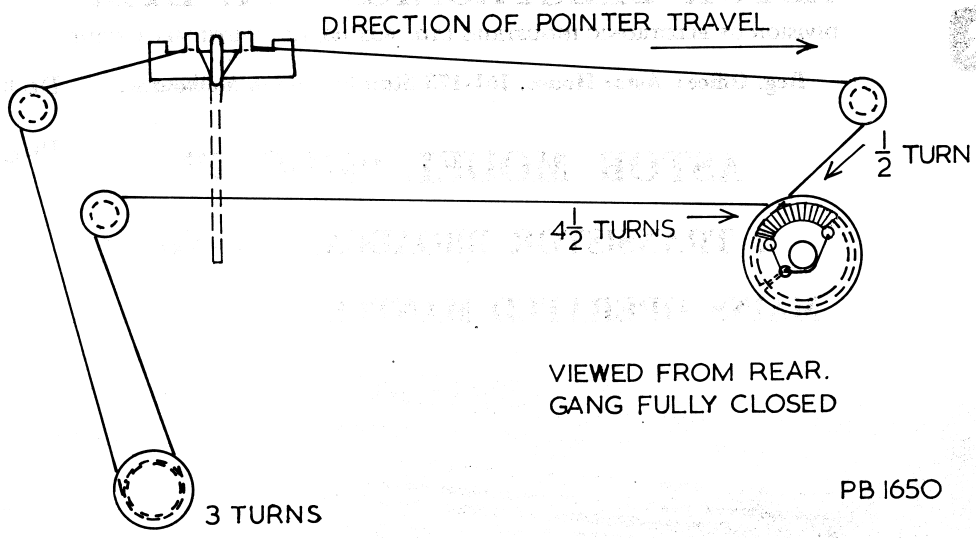

DIAL CORDING DIAGRAM

Circuit No.	Value	Capacitors Description	Tol ±	Rating V.DCW	Part Number
1		2 gang tuning			4000-042-01
2	5-50pF	Trimmer, compression			4000-012-02
3	3-30pF	Trimmer, wire wound			4000-025-01
4	.01uF	Polyester	10%	630	4009-014-19
5	.22uF	Polyester	10%	160	4009-007-14
6	1000uF	Electrolytic		25	4005-025-06
7	1000uF	Electrolytic		25	4005-025-06
8	.01uF	Polyester	10%	160	4009-014-17
9	.0022uF	Polyester	10%	400	4009-002-06
10					

Circuit No.	Value ohms	Resistors Description	Tol ±	Rating Watts	Part Number
11	5.6	Carbon	10%	1/2	4022-084-01
12	220	Carbon	10%	1/2	4022-017-01
13	100K	Carbon	10%	1/2	4022-013-02
14	2M	Volume Control			4032-010-05
15	5M	Tone Control			4032-037-05
16	47K	Carbon	10%	1/2	4022-051-03
17					

Part Number	Mechanical Description
7005-081-02	Dial background
7222-115-01	Socket (2) dial lamp
7086-095-02	Eyelet (2) lamp socket
7174-015-01	Pulley (3) dial cord
7055-250-01	Clip (3) pulley
7225-207-02	Spring - dial cord
1107-002-03	Cord - dial - 42 inches required
7173-080-01	Pointer
7031-017-01	Bush (3) gang mount
7106-032-01	Grommet (3) gang mount
7196-067-03	Screw (3) 5/16" x 4BA Csk hd. - gang mount
7077-032-01	Drum - dial
7198-802-04	Grub screw (2) 1/4" x 5/32" - dial drum
7150-858-01	Nut (4) control bushes
7294-110-01	Spacer (6) module mount
7204-576-12	Screw (4) 3/8" x No. 4 Pan Hd - module mount
7166-007-01	Pillar (2) rod aerial mount
7225-078-01	Clip (2) rod aerial locking
7279-005-02	Nut plate (2) rod aerial mount
7224-446-01	Tuning spindle assembly consists of :
7224-445-02	Spindle
7174-009-01	Pulley
7031-025-01	Bush
7261-028-01	Washer 'C'
7345-006-05	Cord anchor
7027-794-01	Bracket - chassis mount
7152-751-01	Speed nut (2) transformer mount
7201-576-06	Screw (2) 1/2" x No. 4 Pan Hd. - trfmr mount
7244-034-01	Terminal (2) speaker connection
7231-122-01	Terminal strip - 7 lug - Type 1E3E1
7231-011-01	Terminal strip - 2 lug - Type E1
7231-101-01	Terminal strip - 2 lug - Type 1E
7124-489-01	Knob (3)
7152-752-05	Speed nut (1) chassis to cabinet - front
7152-771-02	Speed nut (2) chassis to cabinet - rear
7201-577-10	Screw (3) 5/8" x No. 6 Pan Hd - chassis to cabinet.

Part Number	Cabinet Fittings
7070-148-01	Dial glass
7027-796-02	Bracket (2) dial
7201-577-12	Screw (4) 1/4" x No. 6 Pan Hd - dial Bracket
7201-577-07	Screw (4) 1/2" x No. 6 Pan Hd - speaker
7008-427-04	Badge - ASTOR
7201-627-25	Screw (2) 7/8" x No. 6 O/C'sk hd - cab back

	Styling
7039-011-12	WALNUT SATIN - MODEL MD024/C Cabinet
7039-011-24	OILED TEAK - MODEL MD024/E Cabinet

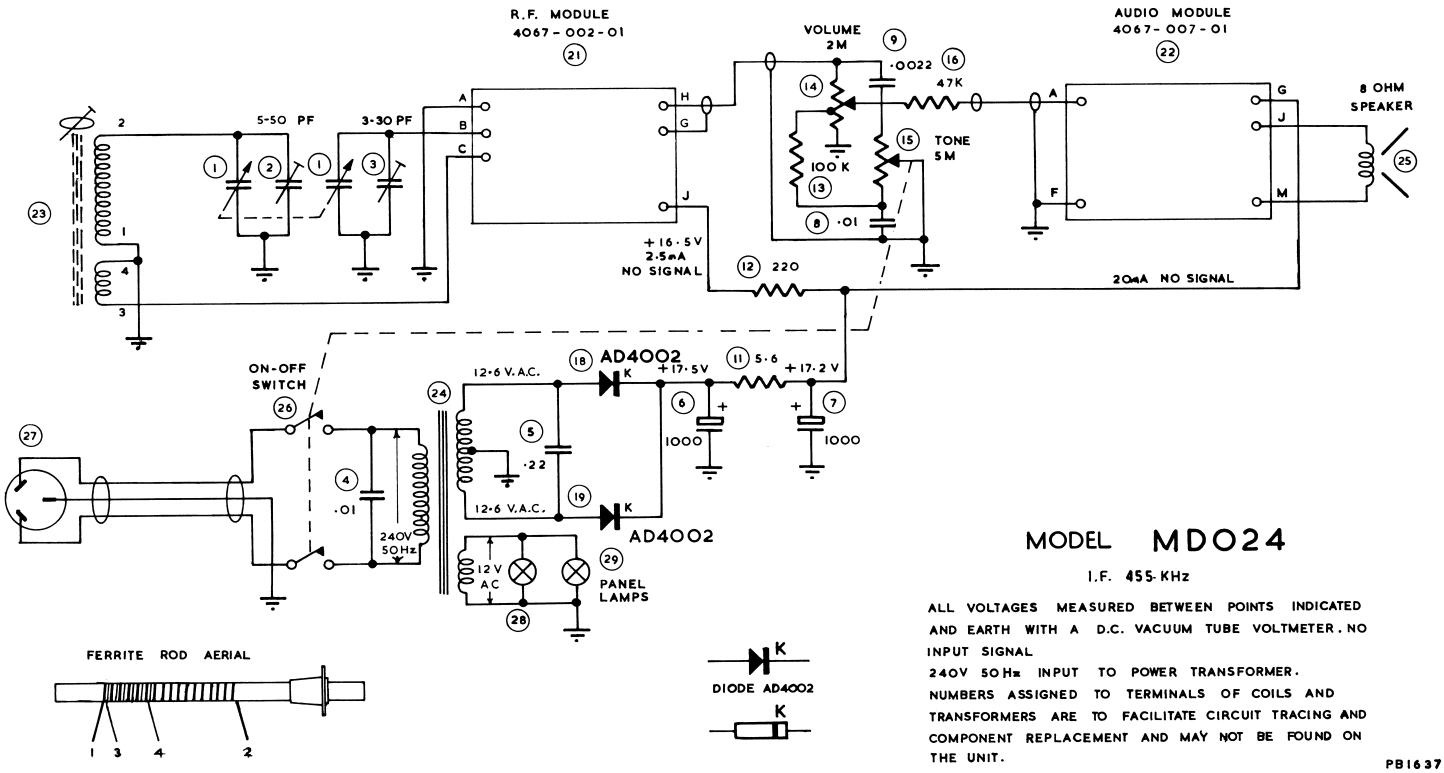

Circuit No.	Miscellaneous	Part Number
18	Diode - Type AD4002	4127-114-01
19	Diode - Type AD4002	4127-114-01
20		
21	R.F. Module - refer separate sheet	4067-002-01
22	Audio Module - refer separate sheet	4067-007-01
23	Ferrite Rod Aerial	4074-064-01
24	Power Transformer	4041-065-02
25	Speaker 4" dia. - Type C4G36/43/8	4056-011-08
26	Switch - Mains - ON-OFF - part of tone control	
27	Mains lead and plug assembly	4078-075-01
28	Lamp 12-16 volt	4068-003-04
29	Lamp 12-16 volt	4068-003-04

Circuit No.	Miscellaneous	Part Number
50		
51	Transistor - type AT319 - Mixer/osc.	4128-118-01
52	Diode- type 1N295 - overload	4127-001-01
53	Transistor - type AT319 - I.F.Amp.	4128-118-01
54	Transistor - type AT319 - I.F.Amp.	4128-118-01
55	Diode - type 1N295 - A.G.C.	4127-001-01
56	Diode - type AA119 - Detector	4127-037-01
57	Osc. Coil	4043-064-01
58	No.1 I.F. Transformer, orange/green,455 Kc/s	4044-031-01
59	No.2 I.F. Transformer, orange/blue, 455 Kc/s	4044-031-02
60		
61	No.3 I.F. Transformer, orange/violet, 455 Kc/s	4044-031-03

Mechanical

Part Number	Description
7167-058-01	Pin (6) Circuit Board Terminations
7120-026-01	Insulator (12) glass, transistor mount

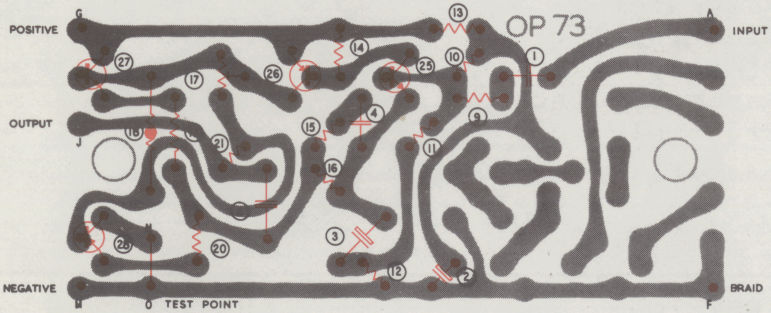

DRAWN	DATE	CHE'D.	APP'D.	DATE
A.J.W.	15·6·67	G.L.	[illegible]	10·10·67

PB 1546 A B

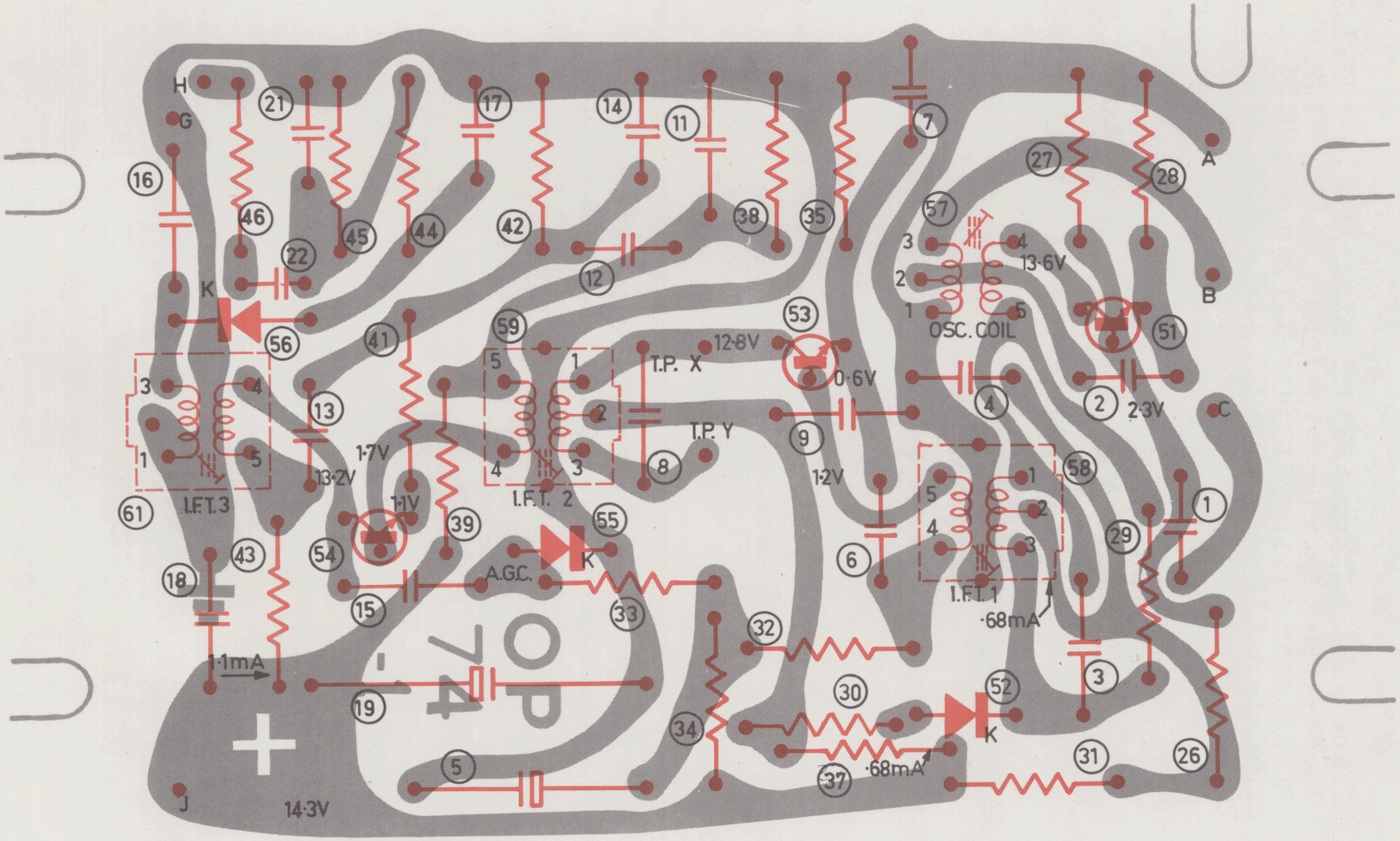
H
G
K
J
A
B
C
I.F.T.3
I.F.T. 2
I.F.T. 1
T.P. X
T.P. Y
A.G.C.
OSC. COIL
12·8V
0·6V
13·6V
2·3V
1·2V
1·7V
1·1V
13·2V
1·1mA
14·3V
·68mA
·68mA
OP 74

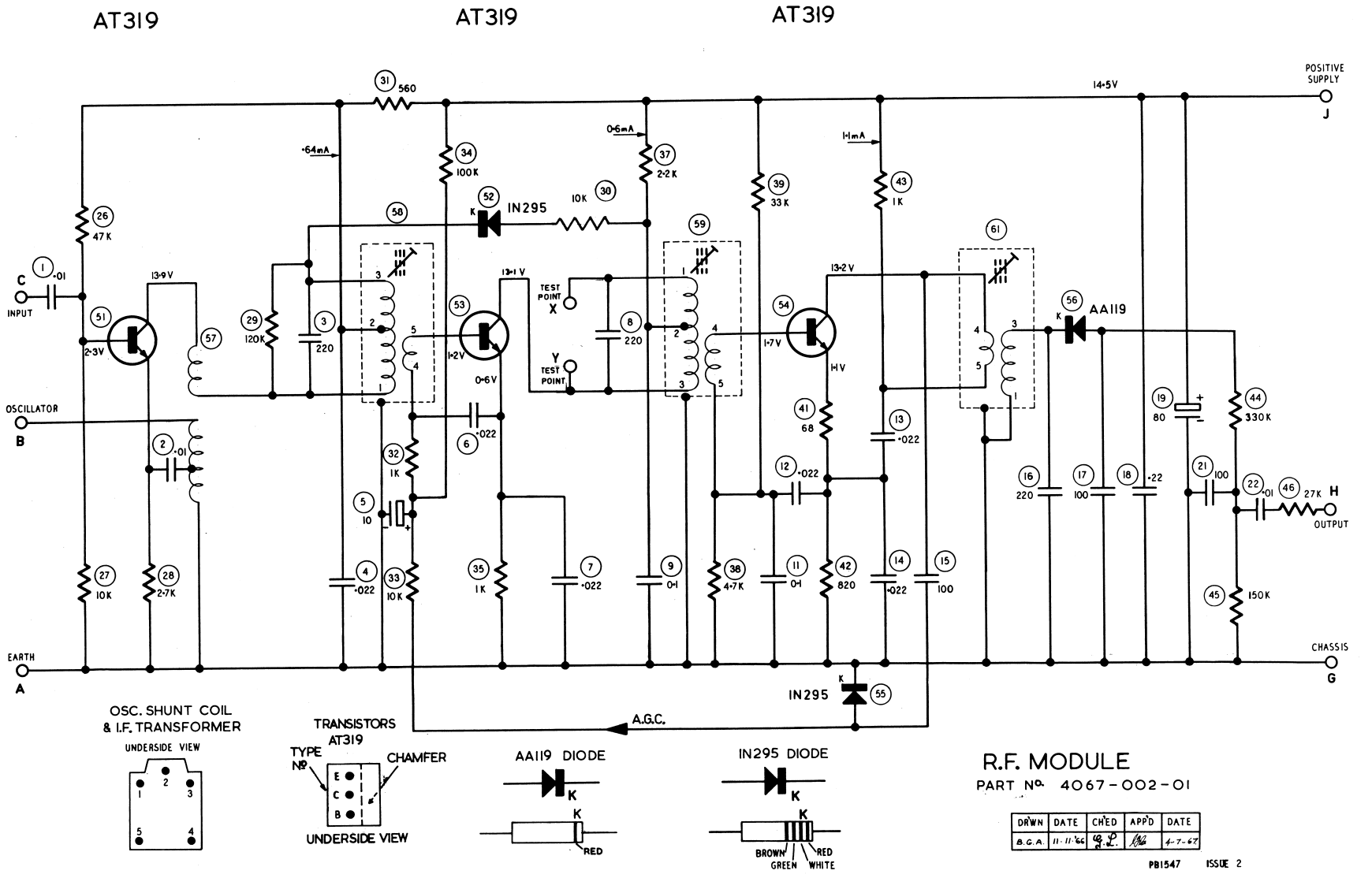
AT319
AT319
AT319
POSITIVE SUPPLY
J
14·5V
31 560
·64mA
34 100K
0·6mA
37 2·2K
1·1mA
39 33K
43 1K
26 47K
52 IN295
10K 30
58
59
61
C
1 ·01
INPUT
13·9V
51
2·3V
57
29 120K
3 220
53
13·1V
1·2V
0·6V
TEST POINT X
Y TEST POINT
8 220
54
13·2V
1·7V
1·1V
56 AA119
OSCILLATOR
B
2 ·01
32 1K
6 ·022
5 10
41 68
12 ·022
13 ·022
19 80
44 330K
16 220
17 100
18 ·22
21 100
22 ·01
46 27K
H
OUTPUT
27 10K
28 2·7K
4 ·022
33 10K
35 1K
7 ·022
9 0·1
38 4·7K
11 0·1
42 820
14 ·022
15 100
45 150K
EARTH
A
CHASSIS
G
IN295
55
A.G.C.
OSC. SHUNT COIL & I.F. TRANSFORMER
UNDERSIDE VIEW
1
2
3
4
5
TRANSISTORS AT319
TYPE Nº
CHAMFER
E
C
B
UNDERSIDE VIEW
AA119 DIODE
K
K
RED
IN295 DIODE
K
K
BROWN
GREEN
RED
WHITE
R.F. MODULE
PART Nº 4067-002-01
DRWN DATE CH'ED APP'D DATE
B.G.A. 11·11·66 4-7-67
PB1547 ISSUE 2