SERVICE MANUAL

IN-DASH AUTOREVERSE CASSETTE CAR STEREO TAPE PLAYER and PUSH-BUTTON AM/FM/FM STEREO RADIO With Dolby System, Built-in FM Noise Blanker, FM Muting, FM Stereo/Mono and FM Local/Dx.

MCC-9012R

Printed in Japan March '79 Modification Reserved

GENERAL INFORMATION

SEMICONDUCTORS: 9 ICs, 5 Transistors, 1 FETs, 15 Diodes, 6 LEDs

RADIO SECTION: 4 ICs, 3 Transistors, 6 Diodes 1 FET

AM Radio

AM IC	IC801	HA1199 x 1
Switching diode	D801, D802	WG1010AS x 2 or equivalent

FM Radio

Radio frequency amplifier	Q501	2SK168 x 1 or equivalent
Mixer	Q502	2SC535 x 1 or equivalent
Oscillator	Q503	2SC460 x 1 or equivalent
IF amp. and detector IC	IC601	M51172P x 1
NB IC	IC602	LA2100 x 1
MPX demodulator	IC701	HA1156W x 1
AFC	D501	1S2139 x 1 or equivalent
Switching diodes	D701, D702	WG1010AS x 2 or equivalent
Voltage regulator	Q701	2SD400P1 x 1 or equivalent
	D705	MZ309 x 1 or equivalent

B-TYPE DOLBY NR DECODER SECTION: 1 IC, 6 Diodes

Dolby IC	IC301	HA11226 x 1 or equivalent
Rectifier	D302, D352	1K60 x 2 or equivalent
Switching diode	D303, D304, D353, D354	WG1010AS x 4 or equivalent

TAPE SECTION: 4 ICs, 2 Transistors, 3 Diodes, 6 LEDs

Pre-amplifier

Pre-amplifier IC	IC101	LA3160 x 1

Main amplifier

Main amplifier IC	IC102, IC202	TA7222AP x 2

Automatic tape reverse

Autoreverse IC	IC 1	AN6250 x 1
Waveform shaper	Q 1	2SC2021 x 1 or equivalent
Solenoid driver	Q 2	2SD916 x 1 or equivalent
	D 3	HZ7C x 1 or equivalent
	D 4	WO3C x 1 or equivalent
Protector diode	D 5	DS135 x 1 or equivalent

Indicator

Board with 6 Light emitting diodes	EIX-1-0	
	D1, 2, 305, 703	EIX-1-0
	D704, 803	

CONTROLS OF OPERATIONS

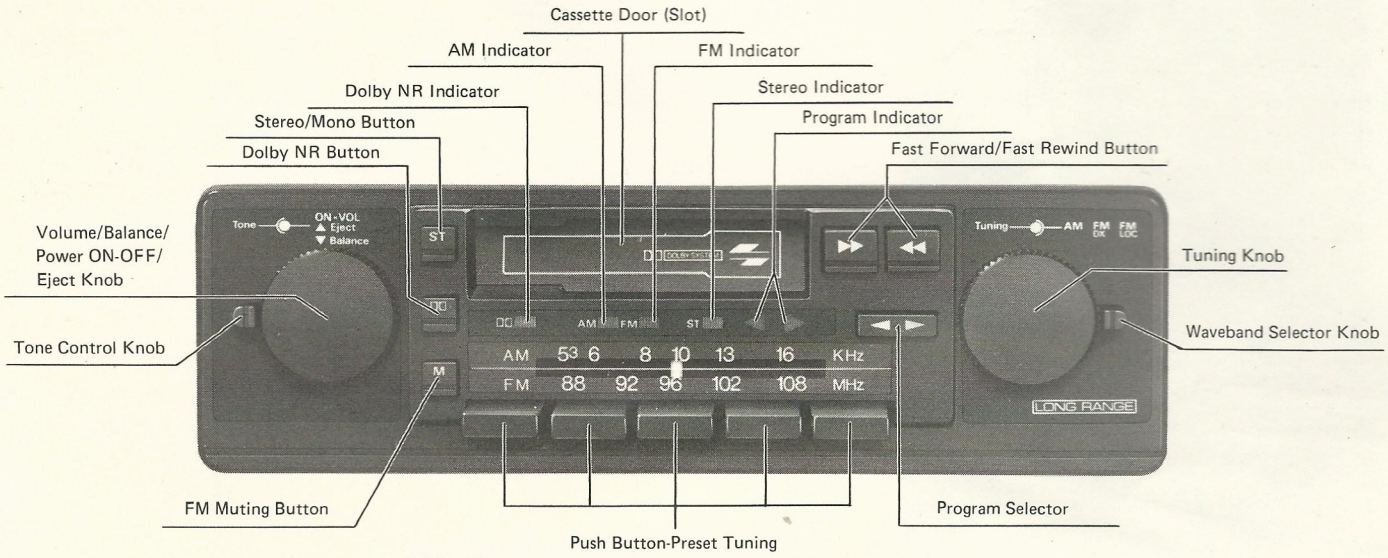

SPECIFICATION

POWER SUPPLY VOLTAGE	DC 14.0V (11 – 16V)
POLARITY	NEGATIVE (–) GROUND ONLY
OUTPUT IMPEDANCE	4 ohm

TAPE SECTION

	TEST FREQUENCY	NOMINAL	LIMIT
MAXIMUM OUTPUT POWER	1 KHz	7W	5W
DISTORTION (1 W)	1 KHz	1%	2%
CHANNEL SEPARATION	1 KHz	38db	30db
PROGRAM CROSSTALK	1 KHz	45db	40db
S/N RATIO	1 KHz	53db	45db
STEREO BALANCE	1 KHz (0 vu)	0db	3db
TAPE SPEED		+1%	–1 +3%
WOW & FLUTTER (WRMS)		0.15%	0.25%
FREQUENCY RESPONSE	125 Hz	+ 1db	–2.5+4.5db
(1 KHz=0 db Output=0.1W, 4 ohm)	6.3 KHz	0db	–3 +3db
TONE CONTROL ACTION	12.5 KHz	–1db	–7 +5db
	125 Hz	+ 8db	+4db
	6.3 KHz	–14db	–10db
CURRENT DRAIN	No Signal	0.5A	0.8A

AM RADIO SECTION

MODULATION: 400 Hz 30%

IF FREQUENCY		455 KHz	450–460 KHz
FREQUENCY RANGE		510 KHz	525 KHz
		1650 KHz	1620 KHz
MAXIMUM SENSITIVITY (1W Output)	1000 KHz	7 μV	15 μV
USABLE SENSITIVITY (S/N = 20db)	1000 KHz	20 μV	30 μV
DIAL CALIBRATION	600 KHz		±30 KHz
	1300 KHz		±50 KHz
A.G.C. –10db (5mV INPUT)	1000 KHz	50db	45db
IMAGE REJECTION (S/N = 20db)	1400 KHz	66db	60db
IF REJECTION (S/N = 20db)	600 KHz	46db	40db
DISTORTION (1 W 30% Mod.)	1000 KHz	1%	2%
	1000 KHz	2%	5%

FM RADIO SECTION

MODULATION: 400 Hz 22.5 KHz DEVIATION (30%)

IF FREQUENCY		10.7 MHz	
FREQUENCY RANGE		87.3 MHz	87.7 MHz
		109.5 MHz	108.9 MHz
USABLE SENSITIVITY (S/N = 30 db)	98 MHz	5 μV	8 μV
DIAL CALIBRATION	88 MHz		±1000 KHz
	108 MHz		± 1000 KHz
FULL LIMITING (–3db 1mV)	98 MHz	5 μV	8 μV
IMAGE REJECTION (S/N= 30db)	108 MHz	46db	40db
IF REJECTION(S/N = 30db)	88 MHz	80db	60db
DISTORTION (1 W, 1 KHz 75 Deviation 100%)	98 MHz	0.5%	2%
STEREO SEPARATION (1 KHz 75 Deviation 100%)	98 MHz	30db	24db

DIMENSION ..... 52mm(H) x 180mm(W) x 130mm(D)

NET WEIGHT ..... 1.9 kg (Net)

NOTE: Nominal Specifications represent the design specs; all units should be able to approximate these – some will exceed and some may drop slightly below these specs. Limit Specifications represent the absolute worst condition which still might be considered acceptable; in no case should a unit perform to less than within any Limit Specification.

BLOCK DIAGRAM

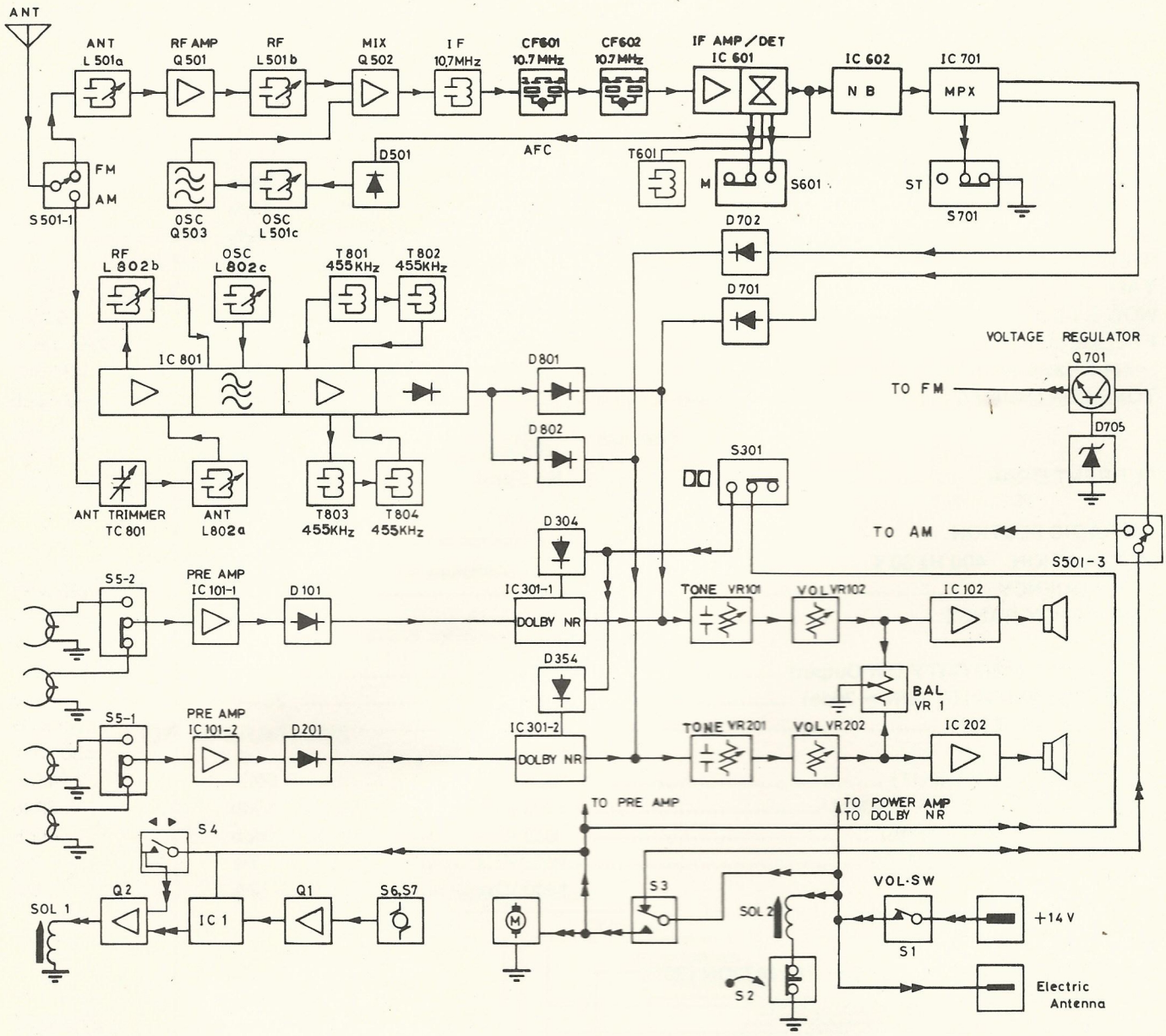

INPUT & OUTPUT

Indication	For Connection Of	Sensitivity	Impedance	Type of Socket	Connection
Speaker Socket	Output Speaker CH Left and CH Right Power Supply 14V DC		4 Ω		1. Left speaker 2. Ground 3. 14V DC 4. Right speaker
Aerial Receptacle	Car radio aerial	1 μV~3V	75 Ω		Aerial
Automatic Aerial Power Supply	For Automatic Aerial	Output Voltage +14V Current drain MAX 500mA			

DISASSEMBLY INSTRUCTIONS

a. To remove knobs, trimplate, brackets, nose piece, top cover and bottom cover.

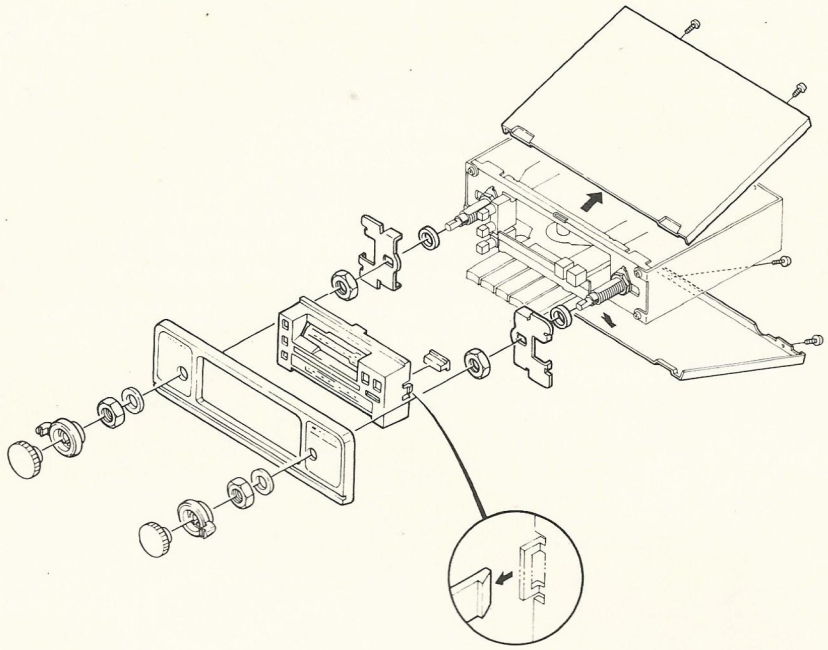

b. To disconnect wirings

1. Loose hexagon nuts on both shafts etc. and move the shafts outward.
2. Detach the flexible circuit board together with the relay PC board. All cables around the mechanism must also be disconnected at this time.

Cables are belows: (See WIRING LAYOUT DIAGRAM)

a) between circuit board number EP-539 and CAP -1 Green, Yellow, Orange, Red and Brown cables.
b) between circuit board number CRP-14 and trimmer capacitor TC801 White and Black cables.
c) between circuit board number CAP-16 and CAP-1 Shield cable (red and white) and Orange cable.
d) between circuit board number CAP13 and CAP-1 Red and Brown cables.

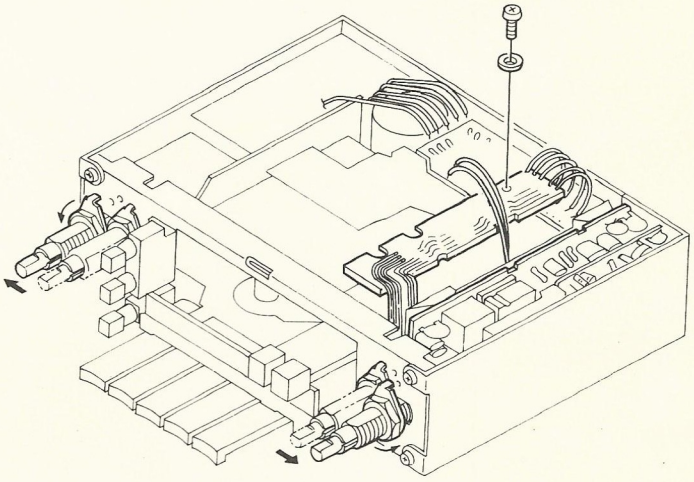

c. To detach L shaped side cover, unscrew five screws (two in front and three in rear).

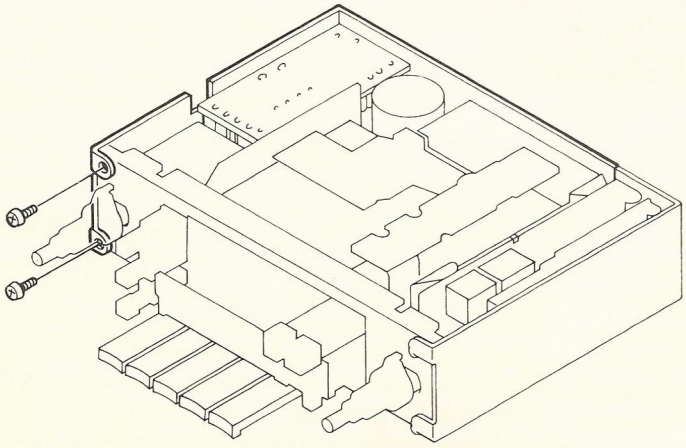

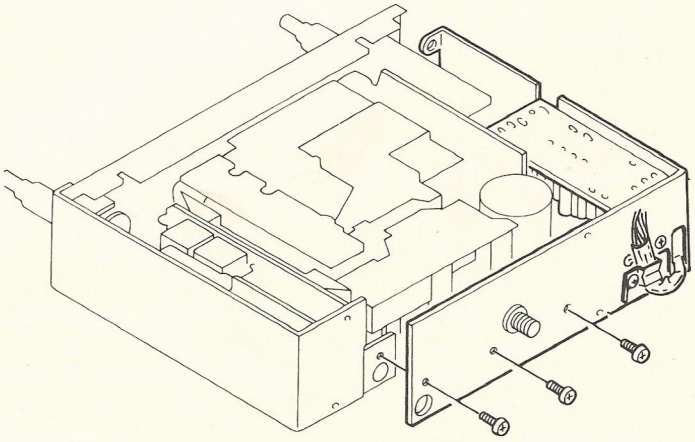

d. To detach the mechanism from chassis, unscrew two screws from front chassis and pull it as illustrated.

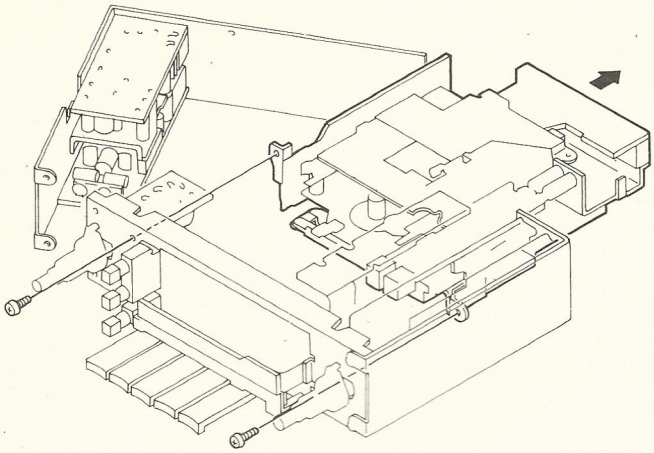

e. To detach flywheel and reel table from the mechanism,

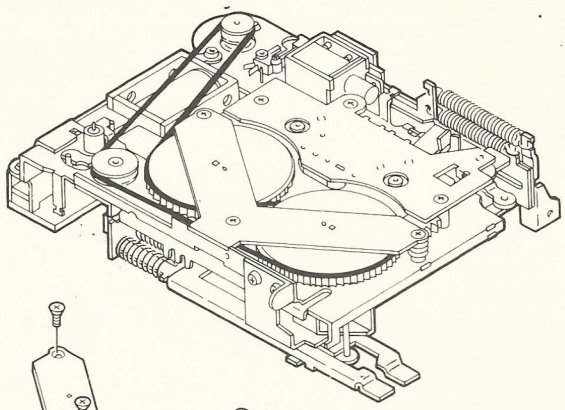

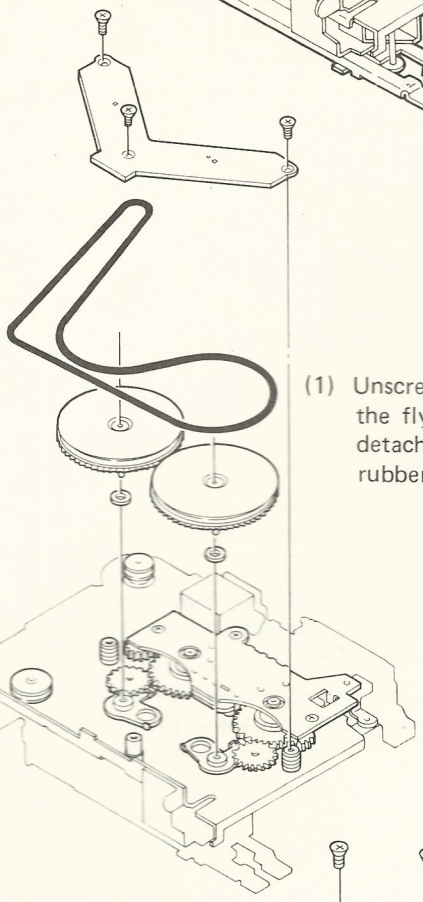

(1) Unscrew three screws from the flywheel holder and detach the flywheel and the rubber drive belt.

f. To detach tape head from the mechanism,

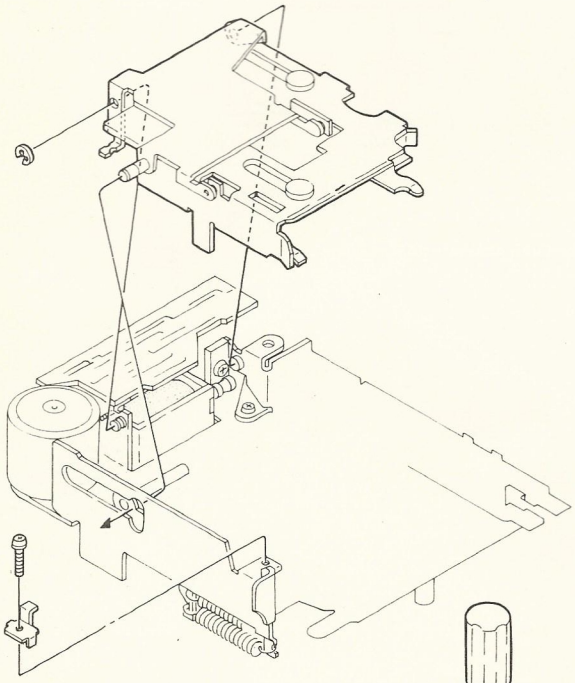

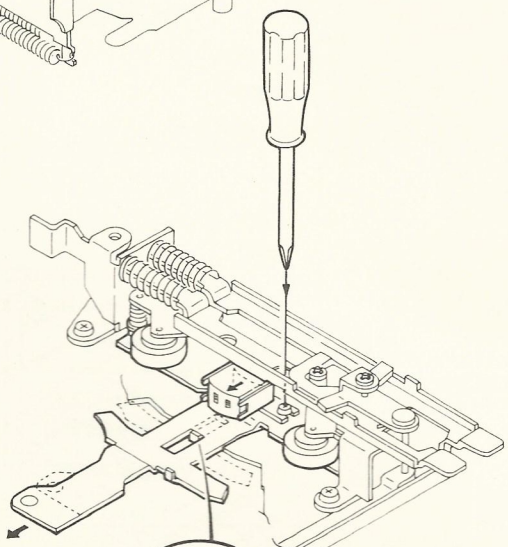

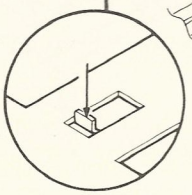

1. Unscrew one screw and remove the cassette tray guard, and remove one E-ring, the cassette tray will detach.

2. Depress prong illustrated in circle, the head board will come out. Then, unscrew two screws and detach the tape head.

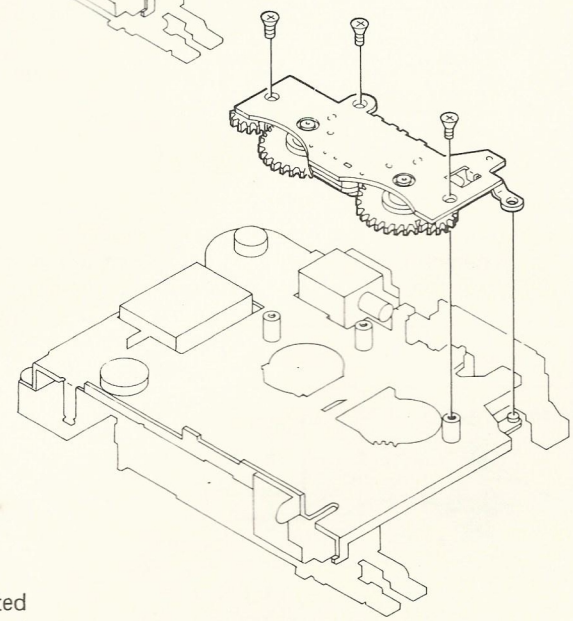

(2) Unscrew three screws and detach the reel table assembly.

How to replace drive belt and flywheel

1. Remove Knobs (Ref. 78, 79), Brackets (Ref. 86, 87), Shaft adjustment spacers (Ref. 90) and Nosepiece ass'y (Ref. 88) as shown at Paragraph- a.

   NOTE: Be careful on Program selector button (Ref. 89), as it will be free from Nosepiece detached away from the front chassis.

2. Unscrew four Screws (Ref. B) and one Screw (Ref. 0) to remove Top and Bottom case covers (Ref. 112, 114).
3. Unscrew two Screws (Ref. C) to remove Sub-front chassis B (Ref. 91).
4. Unscrew three Screws (Ref. P) to remove Side chassis B (Ref. 105).
5. Unscrew two Screws (Ref. L) and unfasten a bundle of wires fastened by Mechanism mounting bracket (Ref. 68) to detach Preset tuner ass'y (Ref. 126).
6. Keep Preset tuner ass'y away to be able to work well for this replacement.
7. Unscrew three Screws (Ref. P) to remove Flywheel holder ass'y (Ref. 57).
8. Then, you can now replace Drive belt (Ref. 59) and Flywheel (Ref. 60).

   NOTE: Be careful on Oldham's coupling (B) (Ref. 109), as it will be free from its junction and don't scratch Dial pointer ass'y while re-mounting Preset tuner.
   Refer the below fingures, Fig. a, Fig. b and Fig. c., and Mechanical Parts List.

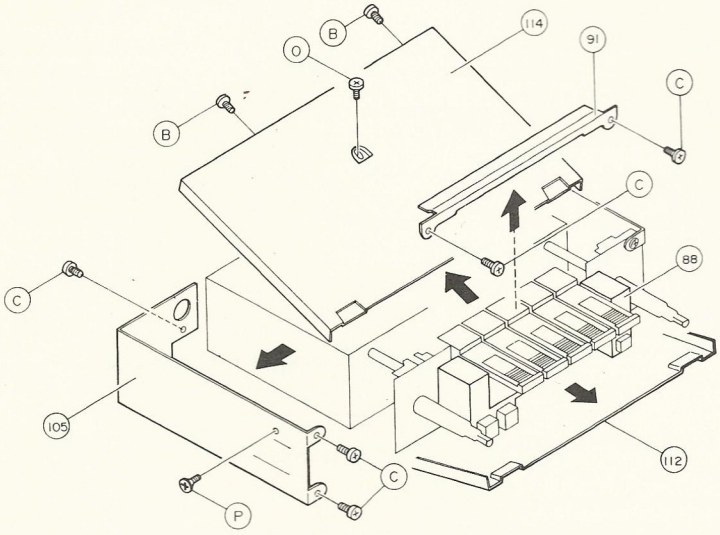

Fig. a

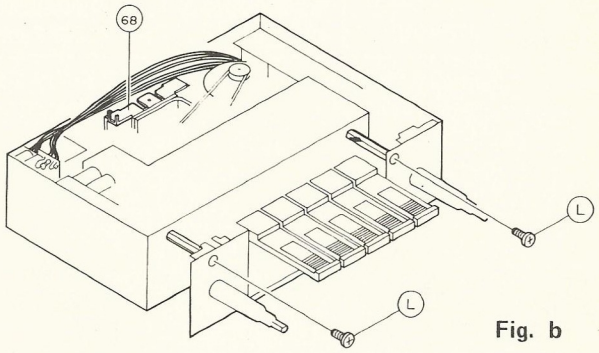

Fig. b

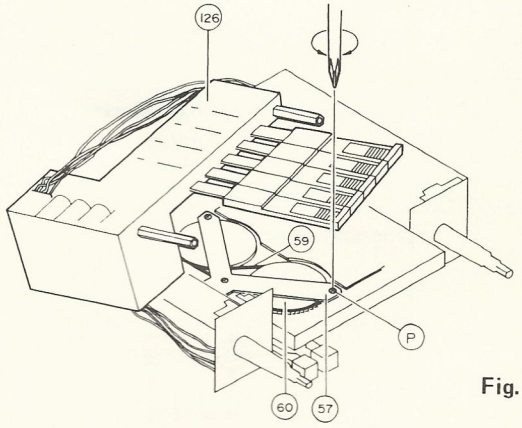

Fig. c

LUBRICATIONS

All parts are lubricated at the factory; additional lubrication will be required only when moving parts bind, or parts are replaced. If you do lubricate parts, use only very small amounts, and be sure to use the correct lubricant. For the capstan bearing surface, use a very light, high-grade oil specifically made for tape mechanisms. For the capstan thrust bearing, use a light grease (again, specially formulated for such applications). For the indexing mechanism and other such sliding/moving parts, use a lubricant such as molybdenum disulfide. Be sure to use any and all of these lubricants sparingly and avoid contact with any other part.

SERVICE ALIGNMENT PROCEDURES

Alignment is performed at the factory with laboratory test equipment. Therefore, before alignment, the set should be thoroughly checked for circuit troubles.

NOTE:
* Check for specified source voltage (14.0V) and polarity (negative ground).
* Use a well regulated DC power supply (5A) only.
* Connect an output meter (AC V.T.V.M.) across th speaker or dummy load (4 ohm, 10W, wirewound resistor).
* Non-metalic alignment tools must be used.
* Signal input must be kept as low as possible to avoid overload and clipping.
* Repeat adjustment to insure good results.
* Refer to PCB view for test point locations.

AM IF & RF ALIGNMENT

Equipment required:

* AM RF Signal Generator
* AC Vacuum Tube Volt Meter (AC V.T.V.M.)
* Stabilized DC Power Supply (DC 14V)
* Oscilloscope
* Sweep Generator (455 KHz)

Turn the radio power switch on, and set the waveband selector for AM reception. AM signal generator should be coupled to aerial socket thru dummy aerial. (See Fig. 1) Set the Volumn control to approx. 1 watt (2 volt) and tone control to max.

STEP	GENERATOR COUPLING	GENERATOR FREQUENCY	RADIO DIAL SETTING	INDICATOR COUPLING	ADJUSTMENT	REMARKS
1	Sweep Generator to TP-801 (AM RF Trimmer TC802) See Fig. 3	455 KHz	Approximate 600 KHz at point of non-interference	Oscilloscope to TP-802 (R803 2.2K 1/4W) See Fig. 2 & 3	T801, T802, T803 & T804 (I.F.T.) See Fig. 3	Adjust for maximum amplitude with symmetrical wave form. Refer to Fig. 4
2	Signal Generator to Aerial Socket thru Dummy Aerial. Refer to Fig. 1	510 KHz Modulation: 400 Hz, 30%	Low frequency end stop	AC V.T.V.M. across speaker (L or R) See Fig. 5	L804 (AM OSC coil) See Fig. 3	Adjust for maximum reading
3	Signal Generator to Aerial Socket thru Dummy Aerial. Refer to Fig. 1	1650 KHz Modulation: 400 Hz, 30%	High frequency end stop	AC V.T.V.M. across speaker (L or R) See Fig. 5	TC803 (AM OSC trimmer) See Fig. 3	Adjust for maximum reading
4	Repeat steps 2 and 3, until tuning range covers exactly 510 KHz to 1650 KHz.					
5	Signal Generator to Aerial Socket thru Dummy Aerial. Refer to Fig. 1	1400 KHz Modulation: 400 Hz, 30%	Tune to signal	AC V.T.V.M. across speaker (L or R) See Fig. 5	TC801 & TC802 (Aerial RF trimmers) See Fig. 3 & 7	Adjust for maximum reading
6	With radio installed in car and aerial extended to desired height, tune in a week station around 1400 KHz and adjust aerial trimmer for maximum output. Refer to Fig. 7					

NOTE: On each step, keep the output of Signal Generator and Sweep Generator as low as possible to avoid clipping and saturation.

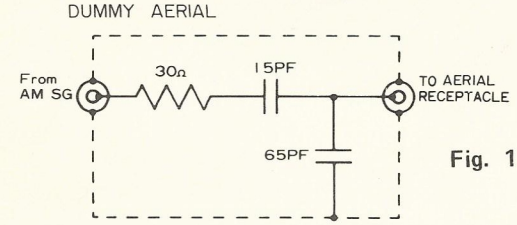

Fig. 1

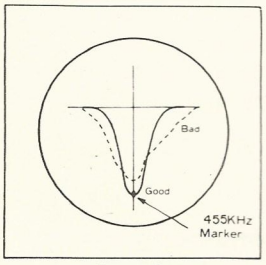

Fig. 4

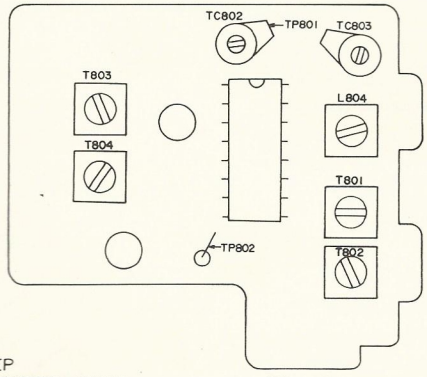

Fig. 3

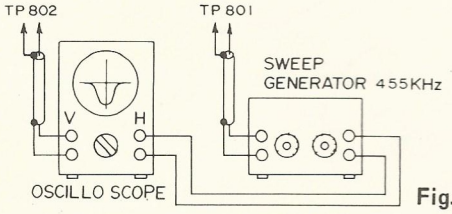

Fig. 2

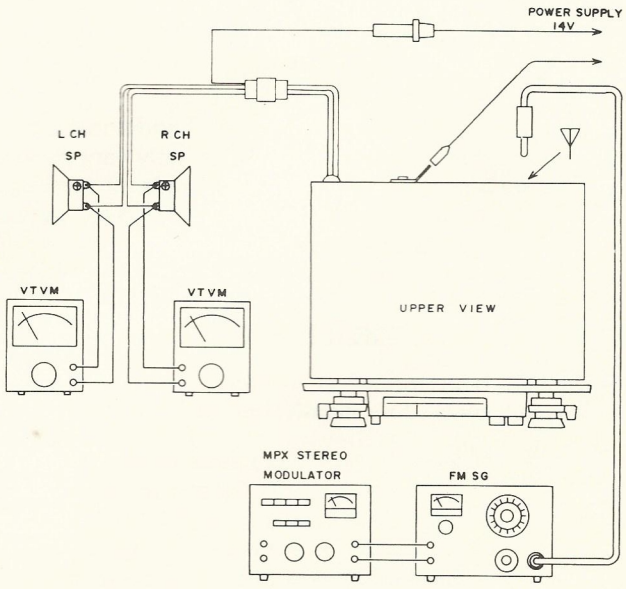

Fig. 5

FM IF & RF ALIGNMENT

Equipment required:

* FM RF Signal Generator
* AC Vacuum Tube Volt Meter (AC V.T.V.M.)
* Sweep Generator (10.7 MHz)
* Oscilloscope
* Stabilized DC Power Supply (DC 4V)

Turn the radio power switch on, and set the waveband selector to FM-DX and the volume control to approx. 1 watt (2 volt) and tone control to max.
Sweep Generator output must be kept as low as possible to avoid clipping and saturation.

STEP	GENERATOR COUPLING	GENERATOR FREQUENCY	RADIO DIAL SETTING	INDICATOR COUPLING	ADJUSTMENT	REMARKS
1	Sweep Generator to TP-501 of FM RF circuit. See Fig. 8 & 10	10.7 MHz	Any point non-interference	Oscilloscope to TP702 (MPX output) See Fig. 6 & 8	T501 & T601 (IFT on FM RF & IF circuit). Fig. 6 & 10	Adjust for maximum amplitude and proper linearity Refer to Fig. 9.
2	Signal Generator to Aerial Receptacle	87.3 MHz Modulation: 400 Hz, 30%	Low frequency end stop	AC V.T.V.M. across speaker (L or R). See Fig. 5	L501c (FM RF circuit OSC coil) See Fig. 10	Adjust for maximum reading
3	Signal Generator to Aerial Receptacle	109.5 MHz Modulation: 400 Hz, 30%	High frequency end stop	AC V.T.V.M. across speaker (L or R). See Fig. 5	TC503 (FM Tuner OSC trimmer) See Fig. 10	Adjust for maximum reading
4	Repeat steps 2 and 3 until range covers exact 87.3 MHz to 109.5 MHz. Must not be able to tune below 87.3 MHz.					
5	Signal Generator to Aerial Receptacle	108 MHz Modulation: 400 Hz, 30%	Tune to signal	AC V.T.V.M. across speaker (L or R). See Fig. 5	TC501, TC502 (FM TunerANT RF Trimmer) See Fig. 10	Adjust for maximum reading
6	Signal Generator to Aerial Receptacle	88 MHz Modulation: 400 Hz, 30%	Tune to signal	AC V.T.V.M. across speaker (L ror R) See Fig. 5	L501a & L501b (FM Aerial RF coils) See Fig. 10	Adjust for maximum reading
7	Repeat steps 5 and 6 three or four times.					

NOTE: On step 1, it is not necessary to try to center the marker to the center position of the wave form, which is dependent on the center frequency of the ceramic filter.
On step 2, 3, 5 and 6 the output level of Signal Generator should be kept low, approximately 10 μV, so that the limiter of the receiver does not affect the alignment.

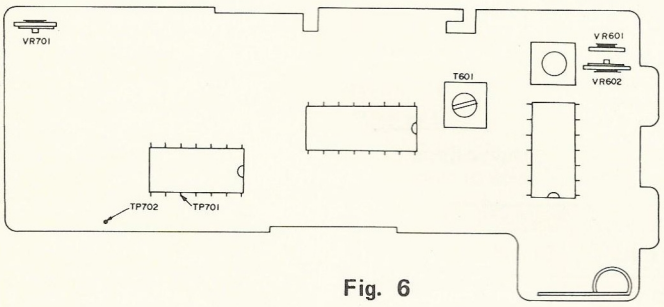

Fig. 6

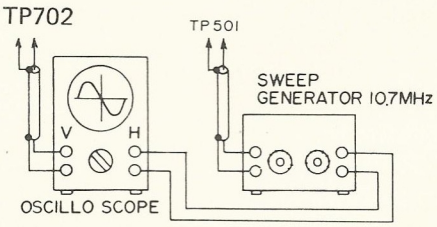

Fig. 8

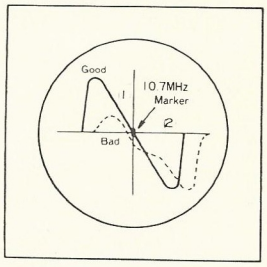

Fig. 9

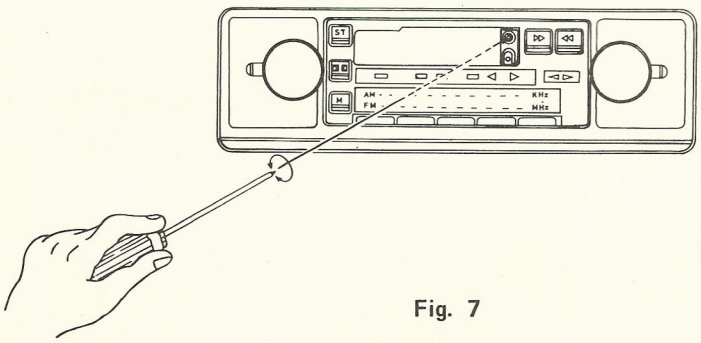

Fig. 7

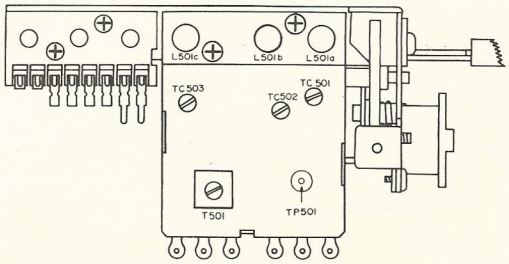

Fig. 10

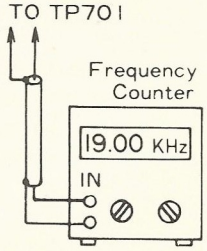

Fig. 11

FM IF NOISE RATIO ALIGNMENT

Equipment required: *FM RF Signal Generator *Stabilizer DC Power supply (DC 14V)
*AC Vacuum Tube Volt Meter (AC V.T.V.M.)

Turn the radio power on, and set the waveband selector to FM-DX and Mute switch off (a button marked M). Set the tone control to max and NB switch to "OFF".

STEP	GENERATOR COUPLING	GENERATOR OUTPUT	RADIO DIAL SETTING	INDICATOR COUPLING	ADJUSTMENT	REMARKS
1	Signal Generator to Aerial Receptacle	98 MHz, 1mV Modulation: 400 Hz, 30%	Tune to Signal	AC V.T.V.M. across speaker (L or R) See Fig. 5	Adjust the volume control to obtain about 1 watt of speaker output power.	
2	Signal Generator to Aerial Receptacle	98 MHz Any reading below 0 μV Modulation: 400 Hz, 30%	Tune to Signal	AC V.T.V.M. across speaker (L or R) See Fig. 5	VR601 (1M ohm) See Fig. 6	Obtain 26 to 40 db of noise output ratio at 1 mV speaker output. 30 db is desirable.

FM MUTING ALIGNMENT

Equipment required: Use the same equipments as FM IF NOISE RATIO ALIGNMENT.

Turn the radio power switch on, and set the waveband selector to FM-DX, the tone control to max. and NB switch of "OFF".

STEP	GENERATOR COUPLING	GENERATOR OUTPUT	RADIO DIAL SETTING	INDICATOR COUPLING	ADJUSTMENT	REMARK
1	Signal Generator to Aerial Receptacle	98 MHz, 3.2 μV Modulation: 400 Hz, 30%	Tune to Signal	AC V.T.V.M. across speaker (L or R) See Fig. 5	Depress Mute switch "OFF" and adjust the volume control to obtain 1 watt of speaker output power.	
2	Signal Generator to Aerial Receptacle	98 MHz, 3.2 μV Modulation: 400 Hz, 30%.	Tune to Signal	AC V.T.V.M. across speaker (L or R) See Fig. 5	VR602 (500K ohm) See Fig. 6	Depress Mute switch "ON" and obtain between 20 to 26 db of noise output ratio at 3.2 μV speaker output.

FM MULTIPLEX STEREO ALIGNMENT

Equipment required: *FM RF Signal Generator *Multiplex Stereo Modulator
*AC Vaccuum Tube Volt Meter (AC V.T.V.M.) *Digital Frequency Counter
*Stabilized DC Power Supply (DC 14V)

Turn the radio power switch on and set the waveband selector to FM-DX. Set the volume control to approx. 1 watt (2 volt) and the tone control to max.

STEP	GENERATOR COUPLING	GENERATOR OUTPUT	MODULATION	RADIO DIAL SETTING	INDICATOR COUPLING	ADJUST-MENT	REMARKS
1	No input signal from Aerial Receptacle			Any point of non-interference	Digital Frequency Counter to TP701. See Fig. 6 & 11	VR-701 See Fig. 6	Adjust for 19 KHz Reading on Frequency Counter.
2	Couple Signal Generator & Mpx. Stereo Modulator. Signal Generator to Aerial Receptacle See Fig. 5	98 MHz 1 mV 75 KHz deviation (100%)	7.5 KHz deviation (10%) for pilot signal (19 KHz) & 67.5 KHz deviation (90%) L + R main signal. (1 KHz)	Tune to Signal	AC V.T.V.M. across each Speaker (L & R). See Fig. 5		Confirm the receiver obtains more than 24 db Channel Separation.

HEAD AZIMUTH ADJUSTMENT

1) Connect V.T.V.M. to the speaker output of the set, and playback 10 kHz test tape.
2) Adjust volume control to medium position, and as shown on figures and align the head azimuth adjustment screw to obtain the maximum output.
3) Repeat the same procedure also in the reverse direction of tape running by operating program selector button. If the maximum output position of the adjustment screw does not agree at each direction, repeat the adjustment until difference becomes minimum.

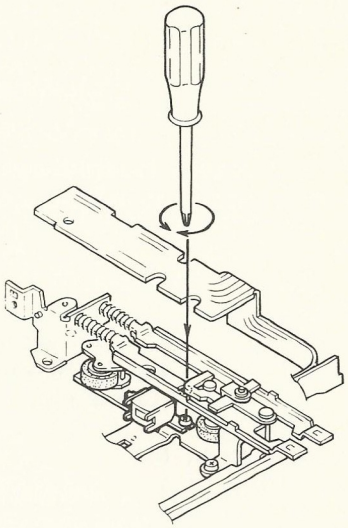

Fig. 12

TAPE SPEED ADJUSTMENT

Connect Digital Frequency Counter to the speaker output of the set at either channel, and playback 3 KHz test tape. Adjust the volume control to an approx. medium position and obtain the reading of Digital Counter between 2,970 Hz and 3,090 Hz.
If the tape speed reading is not within the above limit, replace motor pulley with a proper one. There are five different sized motor pulleys available. (Pulley A: ø11.85 mm, Pulley D: ø11.90mm, Pulley B: ø11.95mm, Pulley E: ø12.00mm, Pulley C: ø12.05mm)

To identify size of motor pulley

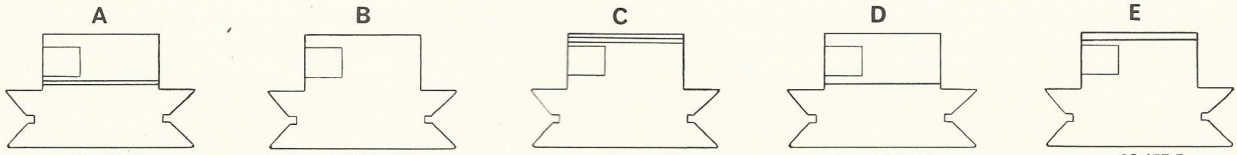

A	B	C	D	E
CS-457-1	CS-457-2	CS-457-3	CS-457-4	CS-457-5
Two curved strips below biss hole	No stripe	Two curved stripes upper biss hole	One curved stripe below biss hole	One curved stripe upper biss hole
ø 11.85 mm (±0.02)	ø 11.95 mm (±0.02)	ø 12.05 mm (±0.02)	ø 11.90 mm (± 0.02)	ø 12.00 mm (±0.02)

Fig. 13

MEASUREMENT OF TAKE-UP REEL TABLE TORQUE

(1) Hand-Grip Type Torque Gauge

(a) Remove the cassette tray from the mechanism.
(b) Supply power to the mechanism.
(c) Lock the cassette mechanism by depressing the lever "a" in the direction of the arrow head as shown in Fig. 14. Also, place the mechanism in PLAY condition by depressing prong down with a pointed material as shown in Fig. 16.
(d) Place the torque gauge in the position and obtain the reading 50g/cm (−10g/cm, +20g/cm).

(2) Cassette Type Torque Gauge

** In case of not removing the cassette tray from the mechanism.
(a) Insert a cassette type torque gauge as shown in Fig. 15 into the cassette slot.
(b) The reading shown on the top of the gauge should be 50g/cm (−10g/cm, +20g/cm).

** In case of removing the cassette tray from the mechanism.
(a) Follow the same procedure as (a), (b) and (c) of Hand-Grip Type Torque Gauge.
(b) Depress the lever "b" shown in Fig. 14 to a certain position untile the cassette type torque gauge easily can be inserted, and then release the lever as soon as cassette type torque gauge is engaged in the position.
(c) The reading shown on the tape of the gauge should be between 40 to 70g/cm.

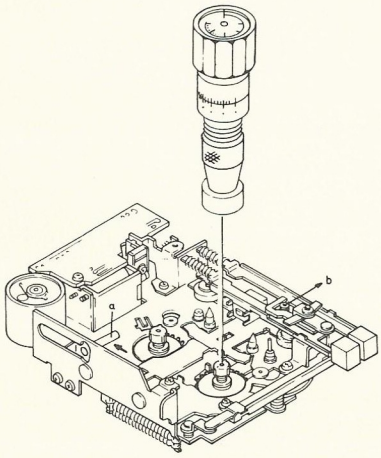

Fig. 14

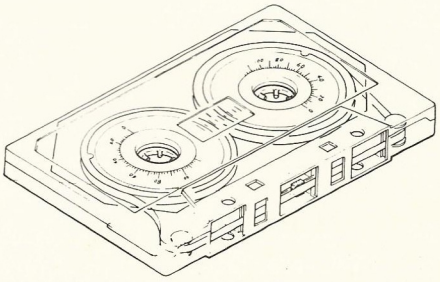

Fig. 15

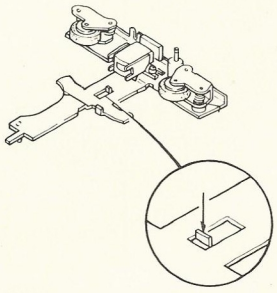

Fig. 16

DOLBY NR CIRCUIT ALIGNMENT

Equipment Required

* Audio frequency generator
* Stabilized power supply (DC 14V)
* AC VTVM
* Dolby level calibration tape (TEAC MTT-150 or equivalent)
* Blank cassette tape

(A) LAW ADJUSTMENT (Standard calibration of Dolby NR characterisitc)

(a) Adjust the frequency of the audio frequency generator to 5 KHz and connect the output to the tape calibration points of TP301 (L CH) and TP302 (R CH).

(b) Insert the blank cassette tape, then turn the Dolby NR switch S301 out.

(c) Adjust the output of audio frequency generator in order to obtain the reading of 59 mV of the VTVM at the test points of TP303 (L CH) and TP304 (R CH). If the reading is not 59 mV, adjust the trimmer resistor VR302 (L CH) or VR352 (R CH) to obtain the reading of 59 mV. These trimmer resistors are provided for the tape level adjustment.

(d) When Dolby NR switch is set to "IN" position, adjust VR303 or LAW adjustment trimmer resistor to be 35.5mV below at TP303 (L CH) and TP304 (R CH) against 59 mV reading obtained in above alignment.

(B) DOLBY TAPE LEVEL ADJUSTMENT

(a) Play back Dolby level calibration tape.

(b) Set Dolby NR switch S301 to "IN" psition and adjust the trimmer resistor VR302 (L CH) and VR352 (R CH) for tape level adjustment in order to obtain 775 mV of reading on VTVM at te test points of TP303 (L CH) and TP304 (R CH).

(c) The difference of the level between Forward and Reverse directions of the tape transport/reproduction should be within ± 1 dB.

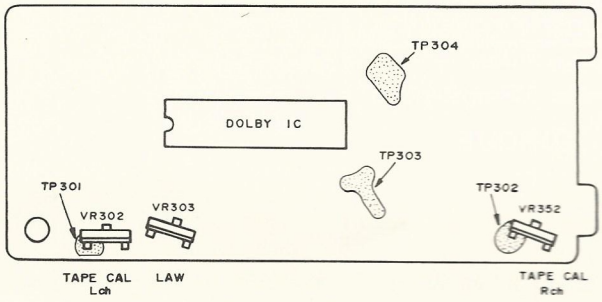

Fig. 17

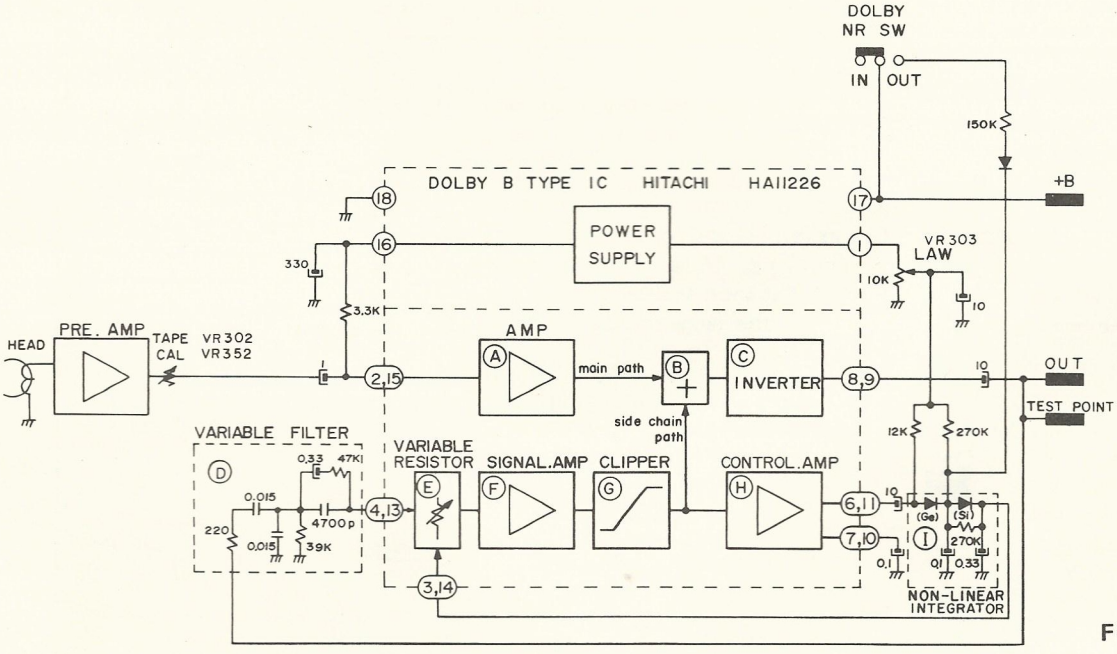

Fig. 18

PRINCIPLE FUNCTION OF DOLBY B TYPE NOISE REDUCTION SYSTEM

The Dolby B-Type noise reduction system is designed for the reduction of hiss and retains the advantage of inaudible action, good matching and low distortion.

The Dolby B-Type circuit is a specialized form of compandor which avoids the usual deficiencies of compandors. The operational principle of the B-Type system is complementary low-level compression and expansion in a frequency range which varies in bandwidth as the signal changes.

1. DOLBY NOISE REDUCTION CIRCUIT OPERATION

The Dolby output signal is a complex of the main and side chain signals. The side chain signal controls the dynamic characteristics of the processor. Only low-level signals are allowed to pass by feeding the signal which is opposite the input signal in phase to a variable filter D and a variable resistor E.
The output of the filter is amplified by signal amplifier F and the resulting noise reduction signal is added to the main signal in adder B. The side chain output is amplified further by control amplifier H and then rectified and smoothed by non-linear integrator circuit I. With increasing input levels, the side chain signal becomes a decreasing proportion of the main signal, and a O VU the side chain signal is very small compared with the main signal so that the signal is subsequently unchanged by the added component.

The control circuit uses a non-linear smoothing scheme to avoid the generation of modulation products while providing fast response under transient condition. To avoid overshoots in the output during this interval the side chain includes the clipper G, which operates only under extreme transient conditions during which the side chain re-establishes its steady-state operation point. Under steady state conditions the clipper G is inoperative.

2. DOLBY NOISE REDUCTION SWITCHING

The switching of Dolby noise reduction circuit is determined whether applying or not applying a voltage of more than "A" level to the non-linear integrator circuit I.
The voltage of "A" level is the voltage of Dolby level signal (2V). The noise reduction will be "OUT" when a voltage of more than 2 volt is applied.

TROUBLESHOOTING GUIDE

RADIO SECTION

SYMPTOM	DEFECTIVE CIRCUIT		DEFECTIVE POINT AND CAUSE
NO SOUND	AM FM SECTION	Aerial circuit	* Aerial input circuit defective. Poor aerial contact. Check wiring or function switch S501-1.
		Power supply circuit	* Power supply circuit defective. D705, Q701 and R718 defective. Check wiring or function switch S501-3. Poor contact of socket N1.
	AM SECTION	Aerial input circuit	* Aerial input defective. Poor aerial contact. Check wiring or function switch S501-3.
		Power supply circuit	* Power supply circuit defective. Check wiring or function switch S501-2.
		RF, OSC, IF output circuit	* L801 ..... L804 open. * Check for voltage of IC801. * IF transformer T801, T802, T803 and T804 open. * Resistor R804 open. * Switching diode D801, D802 defective.

TROUBLESHOOTING GUIDE

SYMPTOM	DEFECTIVE CIRCUIT		DEFECTIVE POINT AND CAUSE
NO SOUND	FM SECTION	Aerial input circuit	* Aerial input circuit defective. Check wiring or function switch S501-1.
		Power supply circuit	* Power supply circuit defective. Check wiring or function switch S501-3.
		RF, OSC circuit	* FM RF board defective. L501, T501 open. Check voltage of transistor Q501, Q502 and Q503.
		IF circuit	* Check pin voltage of IF IC IC601. * Mis-alignment of VR601 or defective. T601 or L601 defective. * Check wiring of muting circuit.
		NB, MPX output circuit	* NB circuit defective. Check pin voltage of NB IC IC602. Low pass filter CR602 defective. Check pin voltage of MPX IC IC701. Switching diode D701, D702 defective.
INSUFFICIENT SOUND	AM FM SECTION	Aerial input circuit	* Poor aerial contact. * Aerial input circuit defective.
	AM SECTION	RF, IF circuit	* Aerial trimmer mis-alignment. * Deviation in tracking alignment. * Deviation in IF transformer T801, T802, T803 and T804. * Aerial input defective. Check wiring or function switch S501-1. * AM IC defective. Check pin voltage of AM IC IC801. * Capacitor C803, C804, C806, C807 and C815 defective.
	FM SECTION	RF, IF or detector circuit	* RF board circuit defective. L501 defective. Q501, Q502 defective. IF transformer T501 defective. * IF board circuit defective. Mis-alignment of VR601 or defective. T601 mis-alignment. L601 defective. Check pin voltage of IF IC IC601.
		NB MPX circuit	* NB circuit defective. Low pass filter CR602. Check pin voltage of NB IC IC602. * MPX circuit defective. Check pin voltage of MPX IC IC701.
DISTORTED SOUND	AM SECTION	RF, IF output circuit	* Capacitor C805, C808 defective. * Diode D801, D802 defective.
	FM SECTION	IF circuit	* Deviation in IF transformer T601. * Diode D701, D702 defective.
OSCILLATION	AM SECTION	Power supply circuit	* Capacitor C817 defective.
		RF, IF output circuit	* Capacitor C809, C818 defective.
	FM SECTION	Power supply circuit	* Capacitor C714, C715 defective.
		RF, IF circuit	* RF board circuit defective. Capacitor C504, C514 defective. * IF board circuit defective. Capacitor C602, C603, C609, C614 defective.
POOR NB	NB circuit		* High pass filter CR601 defective. * Resistor R618 open. * Capacitor C622 defective. * NB IC IC602 defective.

TROUBLESHOOTING GUIDE

SYMPTOM	DEFECTIVE CIRCUIT	DEFECTIVE POINT AND CAUSE
POOR MUTE	IF circuit	* Check wiring muting circuit. * VR602 mis-alignment.
POOR STEREO EFFECT	MPX circuit	* VR701 mis-alignment. * Stereo-mono switch S701 defective. * Capacitor C701, C702 defective. * MPX IC IC701 defective. * Low pass filter CR602 defective.
INDICATOR DOES NOT LIGHT	MPX indicator circuit	* LED D703 defective. * MPX IC IC701 defective. * Resistor R717 open. * Flexible PCB open.
	AM indicator circuit	* LED D803 defective. * Poor socket N4 contact. * Resistor R811 open. * Flexible PCB open.
	FM indicator circuit	* LED D704 defective. * Poor socket N4 contact. * Resistor R716 open. * Flexible PCB open.
ENGINE NOISE IS EXTREME	Motor compartment	* Missing or poor connection of resistor wire on high tension coil of car. Insert noise preventing resistor between ignition coil and distributor of car. * Missing or poor connection of noise silencer by alternator of car. Install specified noise silencer on the alternator. * Missing or poor connection of grounding wire between engine chassis and engine, transmission and engine chassis of car.
	Aerial ground circuit	* Missing or poor connection of grounding wire for aerial to grounding point of the car chassis.
LESS SENSITIVITY OR FREQUENCY DRIFT OCCURRS WHEN AIR CONDITIONER IS ON		* If installed the set near blower of air conditioner, the temperature (hot or cold) create tuning or sensitivity drift. Avoid installing the set near air conditioner or if installing the set near air conditioner is unavoidable, isolate the set by isolating material from temperature of air conditioner.

RADIO AND TAPE SECTION

SYMPTOM	DEFECTIVE CIRCUIT	DEFECTIVE POINT AND CAUSE
NO SOUND	Power supply circuit	* Fuse open. * Power switch (S1) defective. * C115, C118 or Diode D5 short circuit. * Faulty connection between Battery. * Lead wire cold soldered.
	Output circuit	* Speaker voice coil open. * C114, C214 open. * Faulty connection between speaker and connection cord. * Power amplifier defective. Check for power IC (IC102, IC202) or input signal. * L1 or L3 open * L101, L201 short circuit with choke shield case.
DISTORTED SOUND OR INSUFFICIENT SOUND	Output circuit	* Speaker defective. * Power amplifier defective. * Poor contact between output terminal and speaker.
	Power supply circuit	* C115 capacity insufficient or open.
	Output circuit	* Capacity of C108, C208, C111, C211, C112 or C212 insufficient.

TROUBLESHOOTING GUIDE

TAPE SECTION

SYMPTOM	DEFECTIVE CIRCUIT	DEFECTIVE POINT AND CAUSE
NO SOUND	Power supply circuit	Switch S3 defective. Diode D306 defective.
	Mechanism or motor	* Mechanism defective. Check for running of tape. * Motor does not run. R11 defective. Motor defective.
		Dolby NR circuit defective. Check for input signal
	Pre-amplifier circuit	* Pre-amplifier defective. Check for pre-amplifier IC101 or circuit. * Head lead wire open.
	ATR circuit	* Cassette tape does not lock Solenoids (SOL 2) open. Switch S2 defective. * Head open or short Head lead wire open. * Faulty contact of slide switch (S5-1, S5-2)
DISTORTED SOUND OR INSUFFICIENT SOUND	Pre-amplifier circuit	* Pre-amplifier circuit defective. * Head surface dirty.
		Dolby NR circuit defective
OSCILLATION	Pre-amplifier circuit	* Capacitor C116, C117 insufficient or open. * Capacitor C101, C201, C102 or C202 insufficient.
ABNORMAL TAPE SPEED	Motor	* Motor defective.
	Mechanism	* Mechanism defective.
WOW AND FLUTTER	Flywheel drive section	* Flywheel, capstan or intermediate gear defective. * Reel table defective. * Belt, pinchroller, idler, flywheel or pulley dirty. * Motor defective.
DOES NOT REVERSE (EITHER AUTO OR MANUAL)	ATR circuit	Does not reverse when program selector depressed. * Solenoid (SOL 1) defective. * Diode (D4) defective. * R10 defective. * Program selector switch (S4) defective. * Flexible PCB breaks Solenoid do not operate to reverse when the end of tape comes. * ATR switch (S6, S7) defective. * Zener diode (D3) short. * C1, C2, C3, C4 defective. * Transistor (Q1) defective. * IC 1 defective.

DOLBY SECTION

SYMPTOM	DEFECTIVE CIRCUIT	DEFECTIVE POINT AND CAUSE
NO SOUND	Power supply circuit	* Power supply defective. Check wiring * Resistor R319, R320 open.
	Dolby circuit	* Dolby IC301 defective. Check each pin voltage of IC301.
OSCILLATION	Dolby circuit	* C304 or C354 capacity insufficient or open. * C317 or C318 capacity insufficient or open.
POOR DOLBY NR EFFECT	Dolby circuit	* Diode D304 or D354 defective. * Check wiring or function switch S301. * Capacitor C310, C311, C314, C360, C361 or C364 defective. * Diode D302, D303, D352 or D353 defective. * LAW control mis-alignment.

PRESET PUSHBUTTON TUNER ASSEMBLY EXPLODED VIEW

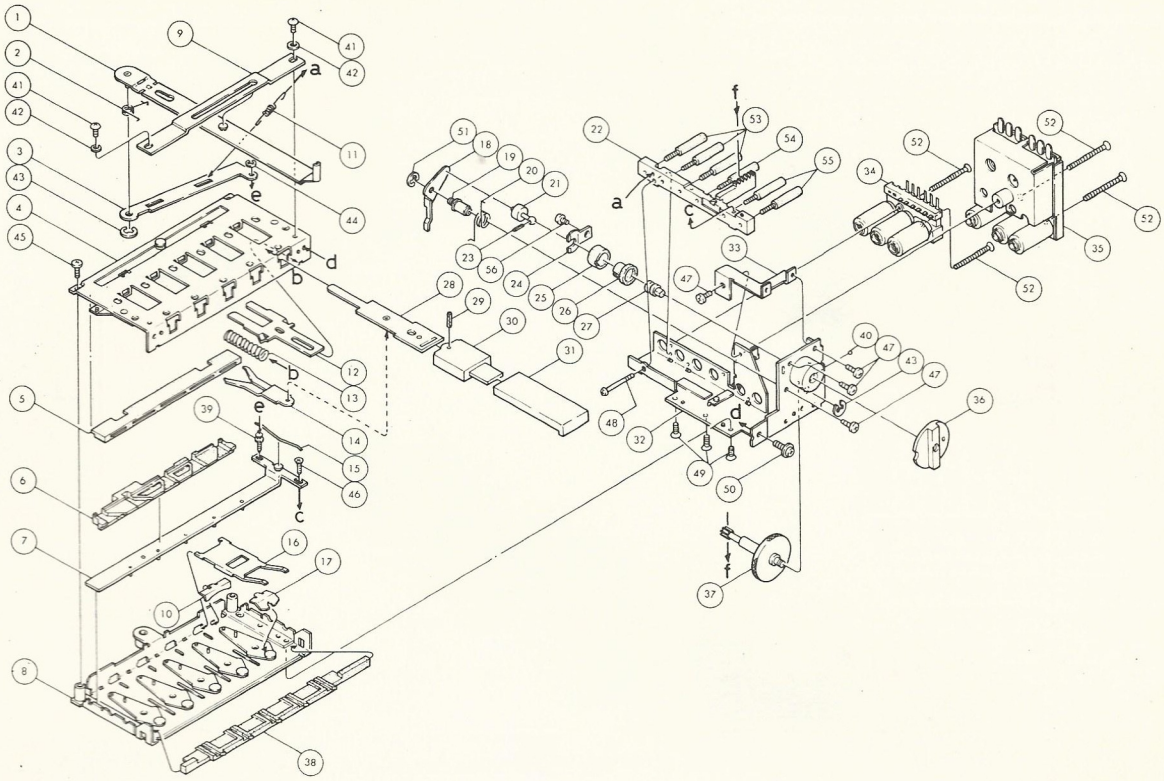

Ref. No. 126 AR-34 Preset Pushbutton Tuner Assembly Parts List

Ref. No.	Description	Part No.	Ref. No.	Description	Part No.
126- 1	Dial pointer ass'y	AA-1M	126-29	Spring pin B	070166
2	Spring A	SC-1M	30	Bottom guide	MM-2M
3	Connection link	PP-111	31	Push button	MP-3M
4	Upper chassis ass'y	AA-2M	32	Side chassis ass'y	AA-7M
5	Select lever A	MP-1M	33	Coil unit holder	PL-9M
6	Select lever B	MP-2M	34	AM coil unit ass'y	AA-8M
7	Waveband select lever ass'y	AA-3M	35	FM RF coil unit ass'y	AA-9M
8	Bottom chassis ass'y	AA-4M	36	Oldham's coupling	MP-1276
9	Dial pointer guide	PL-1M	37	Clutch ass'y	AA-10M
10	Slider spring	PL-2M	38	Clutch release lever	MP-4M
11	Spring B	SC-2M	39	Spring holder pin	CS-2M
12	Lever guide	PL-3M	40	Steel ball ϕ1.5mm	0600015
13	Spring C	SC-3M	41	Truss head screw ϕ1.7 x 2mm	009172
14	Selector cam	PL-4M	42	Plain washer ϕ2mm	012203
15	Spring D	ST-1M	43	E-ring ϕ2mm	030204
16	Lever locker	PL-5M	44	E-ring ϕ1.5mm	030154
17	Plate spring A	PL-6M	45	Bind head screw ϕ2 x 4mm	091204
18	Clutch lever	PL-7M	46	Flat head screw ϕ2 x 1.7mm	002217
19	Lever pin	SC-1M	47	Pan head screw ϕ2 x 4mm	006204
20	Spring E	SC-4M	48	Pan head screw ϕ2 x 17mm	006217
21	Connection pin	AA-5M	49	Flat head screw ϕ2 x 5mm	002205
22	Core guide	MM-1M	50	Screw with flat washer ϕ2.6 x 4mm	
23	Spring pin	0701055	51	E-ring ϕ2.5mm	030254
24	Plate spring B	PL-8M	52	Flat head screw ϕ2 x 24mm	002224
25	Connection sleeve A	CC-1M	53	AM core ass'y	AA-11M
26	Connection sleeve B	CC-2M	54	FM OSC core ass'y	AA-12M
27	Oldham's pin	CC-3M	55	FM RF ANT core ass'y	AA-13M
28	Bottom lever ass'y	AA-6M	56	Pan head screw ϕ2.6 x 4mm	006264

FM RF CIRCUIT BOARD COMPONENT LOCATION GUIDE

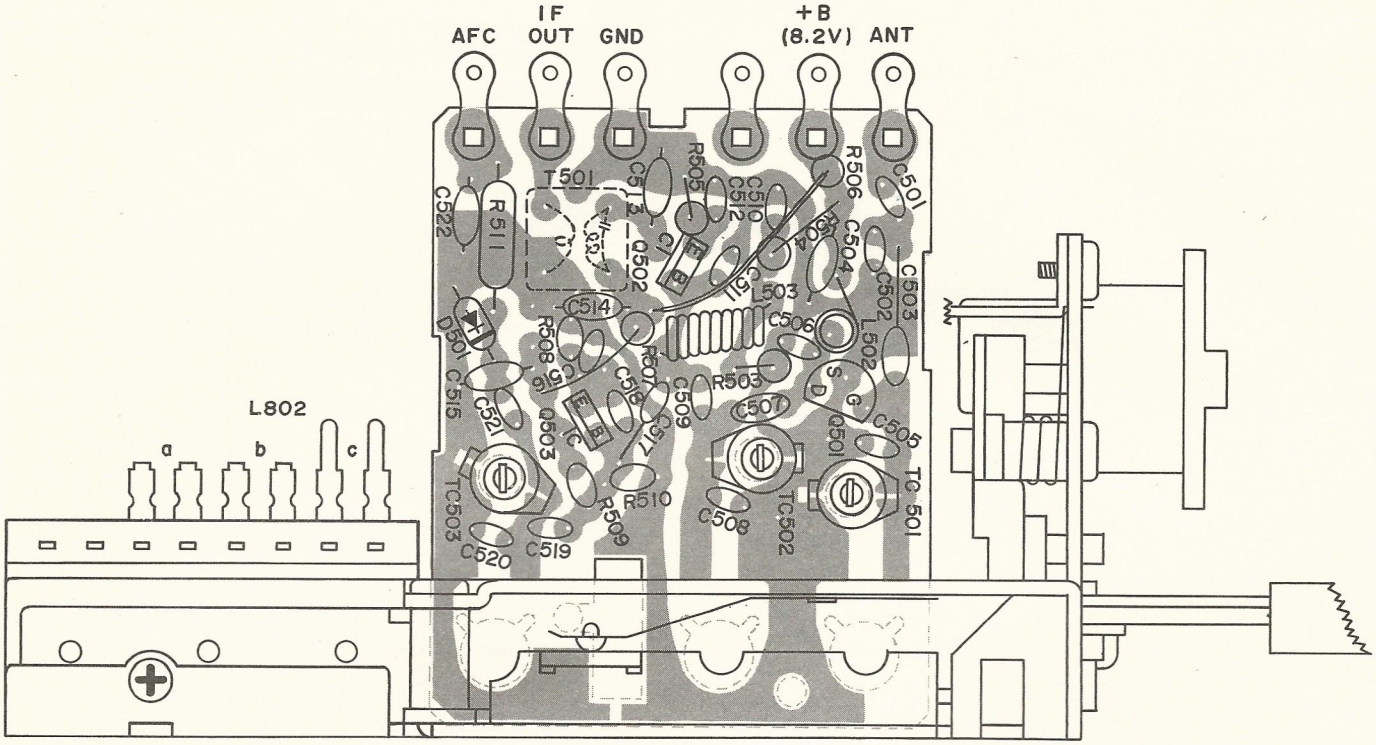

TOP VIEW

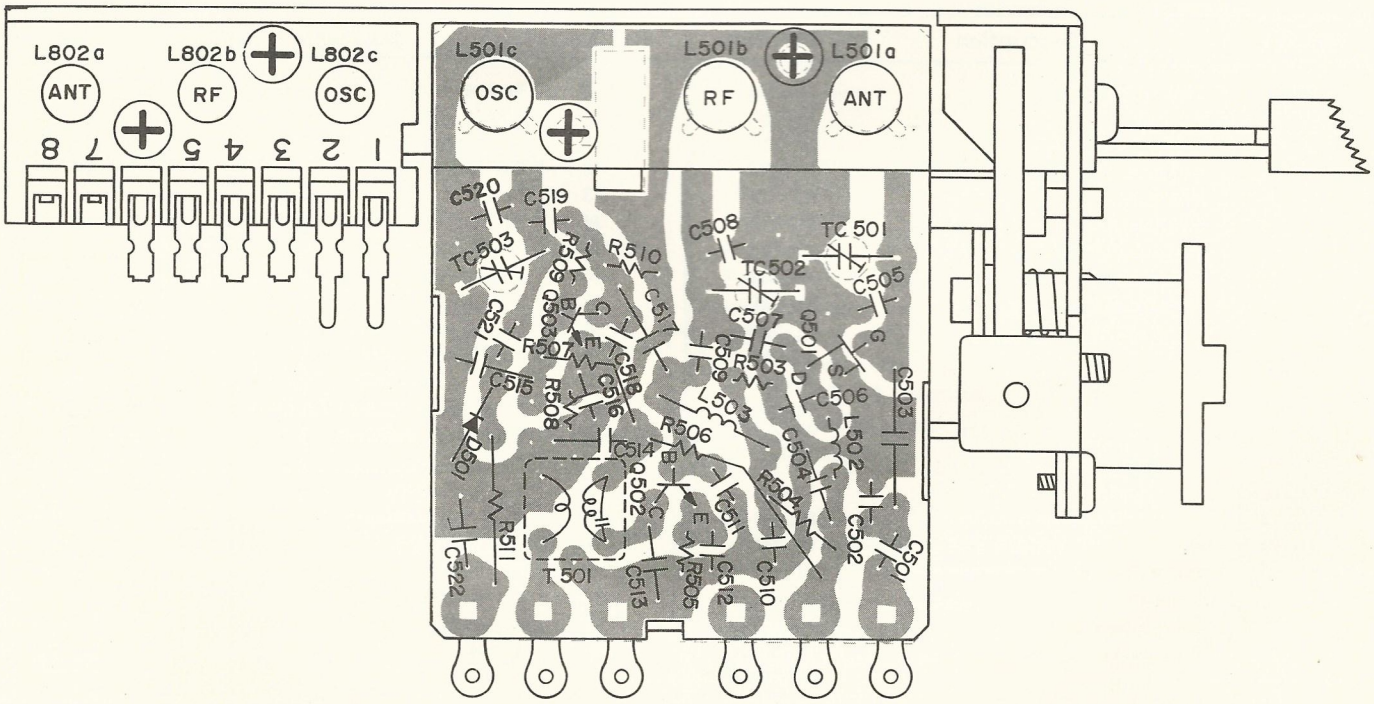

BOTTOM VIEW

Ref. No. 126-35

AA-9M

FM RF CIRCUIT BOARD ASSEMBLY PARTS LIST (AA-9M)

Ref. No.	Description	Part No.
	RF circuit board (Empty)	
Q501	FET 2SK 168 or equivalent	ETTF-168
Q502	Transistor 2SC535 (B) or equivalent	ETTC-535
Q503	Transistor 2SC460 (B) or equivalent	ETTC-460
D501	Variable capacitor diode ITT-410 or equivalent	ETD ITT-410
C509	Ceramic capacitor 4PF 10V SL	ECC
C517	Ceramic capacitor 3PF 10V (NPO)	ECC
C507	Ceramic capacitor 6PF 10V SL	ECC
C521	Ceramic capacitor 7PF 10V (N330)	ECC
C505	Ceramic capacitor 5PF 10V (N150)	ECC
C503	Ceramic capacitor 12PF 10V SL	ECC
C516	Ceramic capacitor 12PF 10V (N470)	ECC
C519	Ceramic capacitor 12PF 10V (N150)	ECC
C520	Ceramic capacitor 7PF 10V (N80)	ECC
C508	Ceramic capacitor 15PF 10V (N80)	ECC
C501	Ceramic capacitor 24PF 10V SL	ECC
C518	Ceramic capacitor 30PF 10V (N470)	ECC
C502, 511	Ceramic capacitor 33PF 10V SL	ECC
C513	Ceramic capacitor 51PF 10V (N220)	ECC
C510	Ceramic capacitor 300PF 10V SL	ECC
C515	Ceramic capacitor 0.0022μF 10V ZF	ECC
C504, 514, 522, 512	Ceramic capacitor 0.02μF 10V ZF	ECC
C506	Ceramic capacitor 18PF 10V SL	ECC
R502	Carbon film resistor 22 – 100 ohms 1/4W ±5%	ECR
R506, 507	Carbon film resistor 100 ohms 1/4W ±5%	ECR
R505	Carbon film resistor 1K ohms 1/4W ±5%	ECR
R503	Carbon film resistor 1.8K ohms 1/4W ±5%	ECR
R508	Carbon solid resistor 3.3K ohms 1/16W ±5%	ECR
R509	Carbon solid resistor 3.9K ohms 1/16W ±5%	ECR
R504	Carbon film resistor 8.2K ohms 1/4W ±5%	ECR
R510	Carbon film resistor 10K ohms 1/16W ±5%	ECR
R511	Carbon film resistor 100K ohms 1/4W ±5%	ECR
T501	FM IFT	
L501a	ANT coil	
L501b	RF coil	
L501c	OSC coil	
L502	RF choke coil	
L503	IF trap coil	
TC501	Ceramic trimmer 5P	
TC502	Ceramic trimmer 5P	
TC503	Ceramic trimmer 5P	

FM IF/MPX/NB CIRCUIT BOARD COMPONENT LOCATION GUIDE

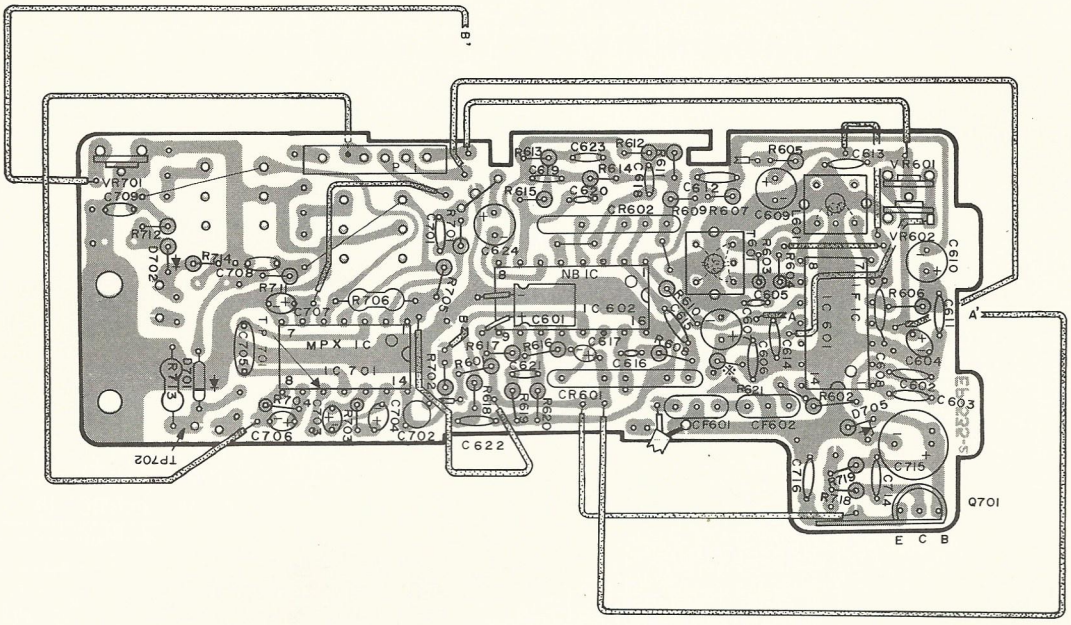

TOP VIEW

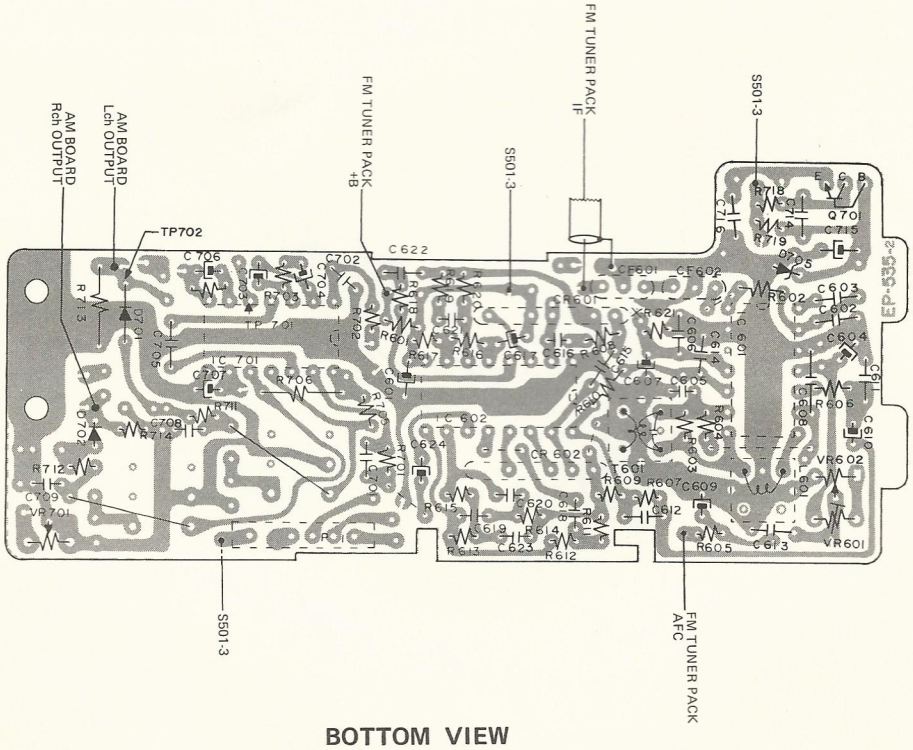

BOTTOM VIEW

Ref. No. 122

CRP-20

FM IF/MPX/NB CIRCUIT BOARD ASSEMBLY PARTS LIST (CRP-20)

Ref. No.	Description	Part No.
EP-535-2	FM circuit board (Empty)	
IC601	FM IF detector IC M51172P	ETI-40
T601	Quadrature tank coil 10.7 MHz	ELD-144
L601	Inductor 18 μH ± 5%	ELD-143
VR602	Trimmer resistor 500K ohm-B	ECRV-217
VR601	Trimmer resistor 1M ohm	ECRV-228
CF601, 602	Ceramic filter 10.7 MHz	EOP-7
C601	Electrolytic capacitor 33 μF 10V	ECC
C602, 603, 613	Ceramic capacitor 0.022 μF 10V ZF	ECC
C604	Tantalum electrolytic capacitor 0.47 μF 10V	ECC
C605	Ceramic capacitor 25pF 10V SL	ECC
C606, 614	Polyester film capacitor 0.022 μF 10V	ECC
C607	Electrolytic capacitor 1 μF 10V	ECC
C608	Ceramic capacitor 0.047 μF 25V ZF	ECC
C609, 610	Electrolytic capacitor 4.7 μF 10V	ECC
C611	Ceramic capacitor 220pF 10V SL	ECC
R601	Carbon film resistor 22 ohm 1/4W ± 5%	ECR
R602	Carbon film resistor 330 ohm 1/4W ± 5%	ECR
R603, 604	Carbon film resistor 3.3K ohm 1/4W ± 5%	ECR
R605	Carbon film resistor 100K ohm 1/4W ± 5%	ECR
R606	Carbon film resistor 1K ohm 1/4W ± 5%	ECR
R607	Carbon film resistor 2.2K ohm 1/4W ± 5%	ECR
R621	Carbon film resistor 10K ohm 1/4W ± 5%	ECR
IC602	NB IC LA2100	ETI-44
CR601	High pass filter	ECX-7
CR602	Low pass filter	ECX-6
C615	Ceramic capacitor 330pF 10V SL	ECC
C616	Ceramic capacitor 5pF 10V SL	ECC
C617	Tantalum electrolytic capacitor 0.22 μF 10V	ECC
C618	Polyester film capacitor 0.0068 μF 10V	ECC
C619, 620	Ceramic capacitor 560pF 10V YB (K)	ECC
C621	Polyester film capacitor 0.0022 μF 10V	ECC
C622, 612	Polyester film capacitor 0.01 μF 10V	ECC
C623	Polyester film capacitor 0.001 μF 10V	ECC
C624	Electrolytic capacitor 1 μF 10V	ECC
R608	Carbon film resisitor 430K ohm 1/4W ± 5%	ECR
R609, 610	Carbon film resistor 47K ohm 1/4W ± 5%	ECR
R611	Carbon film resistor 2.7K ohm 1/4W ± 5%	ECR
R612, 614	Carbon film resistor 8.2K ohm 1/4W ± 5%	ECR
R613, 615, 616	Carbon film resistor 15K ohm 1/4W ± 5%	ECR
R617	Carbon film resistor 1K ohm 1/4W ± 5%	ECR
R618	Carbon film resistor 68K ohm 1/4W ± 5%	ECR
R619	Carbon film resistor 390 ohm 1/4W ± 5%	ECR
R620	Carbon film resistor 6.8K ohm 1/4W ± 5%	ECR
IC701	MPX IC HA1156W	ETI-22
D701, 702	Silicon diode WG1010AS or equivalent	ETD-WG1010AS
VR701	Trimmer resistor 5K ohm-B	ECRV-216
C701	Polyester film capacitor 0.001 uF 10V	ECC
C702	Polyestyrene capacitor 470pF ± 5%	ECC
C703	Tantalum electrolytic capacitor 0.22 μF 10V	ECC
C704, 706, 707	Tantalum electrolytic capacitor 0.47 μF 10V	ECC
C705, 708, 709	Polyester film capacitor 0.047 μF 10V	ECC
R701	Carbon film resistor 10K ohm 1/4W ±5%	ECK
R702	Carbon film resistor 16K ohm 1/4W ±5%	ECK
R703	Carbon film resistor 1K ohm 1/8W ±5%	ECK
R704	Carbon film resistor 100K ohm 1/8W ±5%	ECK
R705, 706, 711, 712	Carbon film resistor 3.3K ohm 1/4W ±5%	ECK
R713, 714	Carbon film resistor 22K ohm 1/4W ±5%	ECK
Q701	Silicon transistor 2SD400 (P1) or equivalent	ETTD-400P1
D705	Zener diode MZ309 or equivalent	ETD-MZ309
C714	Ceramic capacitor 0.022 μF 10V ZF	ECC
C715	Electrolytic capacitor 330 μF 10V	ECC
C716	Ceramic capacitor 0.047 μF 10V ZF	ECC
R718	Carbon film resistor 6.8 ohm 1/4W ± 5%	ECR
R719	Carbon film resistor 1.5K ohm 1/4W ± 5%	ECR
P1	5P straight plug	ESP-59

AM CIRCUIT BOARD COMPONENT LOCATION GUIDE

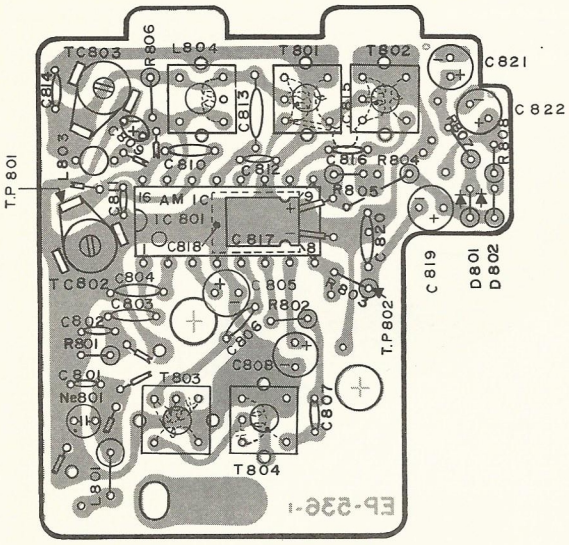

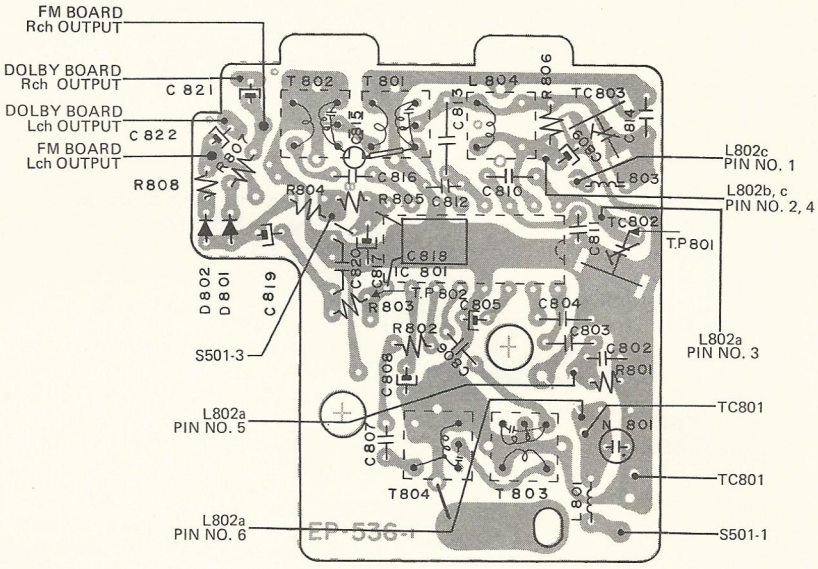

TOP VIEW BOTTOM VIEW

Ref. No. 127 CRP-14 **AM Circuit Board Assembly Parts List**

Ref. No.	Description	Part No.
EP-536-1	AM Circuit board (Empty)	
IC801	AM IC HA-1199	ETI-39
D801, 802	Silicon diode WG1010AS or equivalent	ETD-WG1010AS
TC802, 803	Trimmer capacitor 50pF TC802, 803	ECCV-12
T801, 802	AM IFT	ELD-149
T803	AM IFT	ELD-116
T804	AM IFT	ELD-117
L801	Choke coil 4.7μF ±5%	ELA-32
L802a	ANT coil	
L802b	RF coil	
L802c	OSC coil	
L803	Inductor 4.7μH ±5%	ELD-108
L804	OSC coil	ELD-78
N801	Neon tube	EIN-4
C802	Polyester film capacitor 0.0033μF 10V	ECC
C811, 812	Polyester film capacitor 0.001μF 10V	ECC
C820	Polyester film capacitor 0.022μF 10V	ECC
C804, 818	Polyester film capacitor 0.047μF 10V	ECC
C803	Ceramic capacitor 0.047μF 10V ZF	ECC
C805	Electrolytic capacitor 4.7μF 10V	ECC
C806	Polyester film capacitor 470pF 10V	ECC
C807	Polyester film capacitor 0.0022μF 10V	ECC
C808	Electrolytic capacitor 22μF 10V	ECC
C809	Solid aluminum electrolytic capacitor 1μF 10V	ECC
C810	Ceramic capacitor 120pF 50V SL	ECC
C813	Ceramic capacitor 220pF 50V N750	ECC
C814	Ceramic capacitor 22pF 50V SL	ECC
C815	Ceramic capacitor 2pF 50V SL	ECC
C816	Ceramic capacitor 0.01μF 50V ZF	ECC
C817	Electrolytic capacitor 100μF 16V	ECC
C819, 821, 822	Electrolytic capacitor 1μF 50V	ECC
R801	Carbon film resistor 4.7K ohm 1/4W ±5%	ECR
R802	Carbon film resistor 220 ohm 1/4W ±5%	ECR
R803	Carbon film resistor 2.2K ohm 1/4W ±5%	ECR
R804	Carbon film resistor 10K ohm 1/4W ±5%	ECR
R805	Carbon film resistor 100 ohm 1/4W ±5%	ECR
R806	Carbon film resistor 15K ohm 1/4W ±5%	ECR
R807, 808	Carbon film resistor 6.8K ohm 1/4W ±5%	ECR

DOLBY CIRCUIT BOARD COMPONENT LOCATION GUIDE

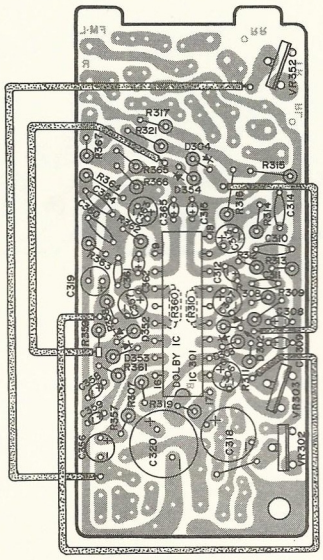

TOP VIEW

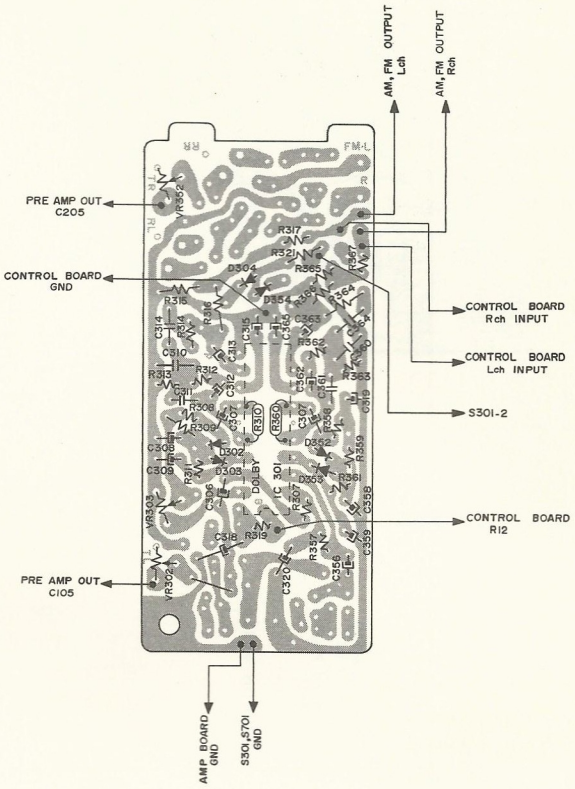

BOTTOM VIEW

Ref. No. 130 CAP-20 Bolby Circuit Board Assembly Parts List

Ref. No.	Description	Part No.
EP-529-3	Dolby circuit board (Empty)	EP-529-3
IC301	Dolby IC HA 11226	ETI-38
D302, 352	Gemanium diode 1K60 or equivalent	ETD-1K60
D303, 304, 353, 354	Silicon diode WG1010AS or equivalent	ETD-WG1010AS
VR302, 303, 352	Semi potentiometer 10 K ohm	ECRV-213
C311, 361	Polyester film capacitor 4700pF 50V ± 2%	ECC
C310, 314, 360, 364	Polyester film capacitor 0.015μF 50V ± 2%	ECC
C308, 315, 358, 365	Tantalum electrolytic capacitor 0.1uF 10V	ECC
C309, 312, 359, 362	Tantalum electrolytic capacitor 0.33uF 10V	ECC
C306, 356	Electrolytic capacitor 1μF 10V	ECC
C307, 313, 319, 357, 363	Electrolytic capacitor 10μF 10V	ECC
C318	Electrolytic capacitor 100μF 16V	ECC
C320	Electrolytic capacitor 330μF 10V	ECC
R319	Carbon film resistor 33 ohm 1/4W ±5%	ECR
R314, 364	Carbon film resistor 220 ohm 1/4W ±5%	ECR
R307, 357	Carbon film resistor 3.3K ohm 1/4W ±5%	ECR
R313, 363	Carbon film resistor 3.9K ohm 1/4W ±2%	ECR
R315, 317, 365, 367	Carbon film resistor 6.8K ohm 1/4W ±5%	ECR
R308, 358	Carbon film resistor 12K ohm 1/4W ±5%	ECR
R316, 366	Carbon film resistor 22K ohm 1/4W ±5%	ECR
R312, 362	Carbon film resistor 47K ohm 1/4W ±5%	ECR
R321	Carbon film resistor 150K ohm 1/4W±5%	ECR
R309,311, 359, 361	Carbon film resistor 270K ohm 1/4W±5%	ECR
R310, 360	Carbon film resistor 10M ohm 1/4W ±5%	ECR

AMPLIFIER CIRCUIT BOARD COMPONENT LOCATION GUIDE

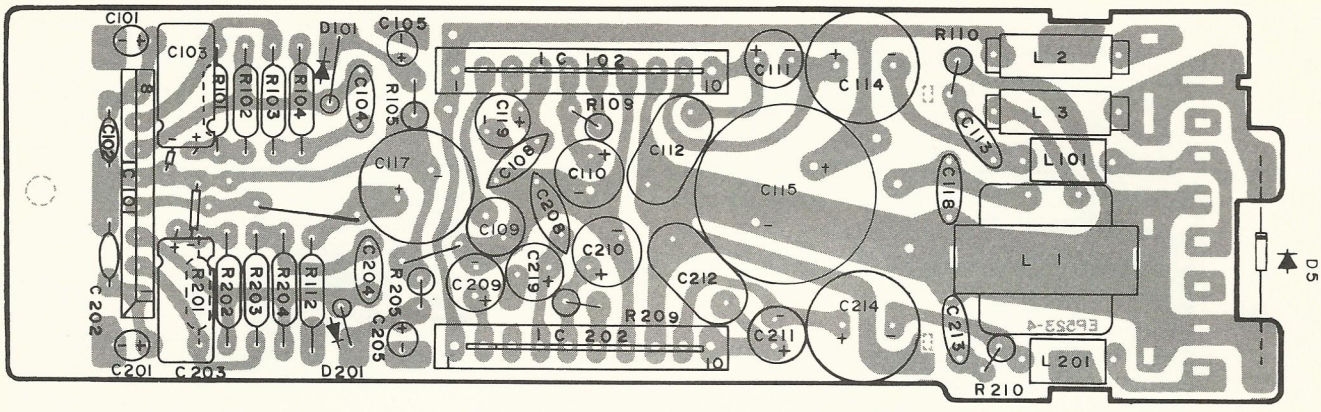

TOP VIEW

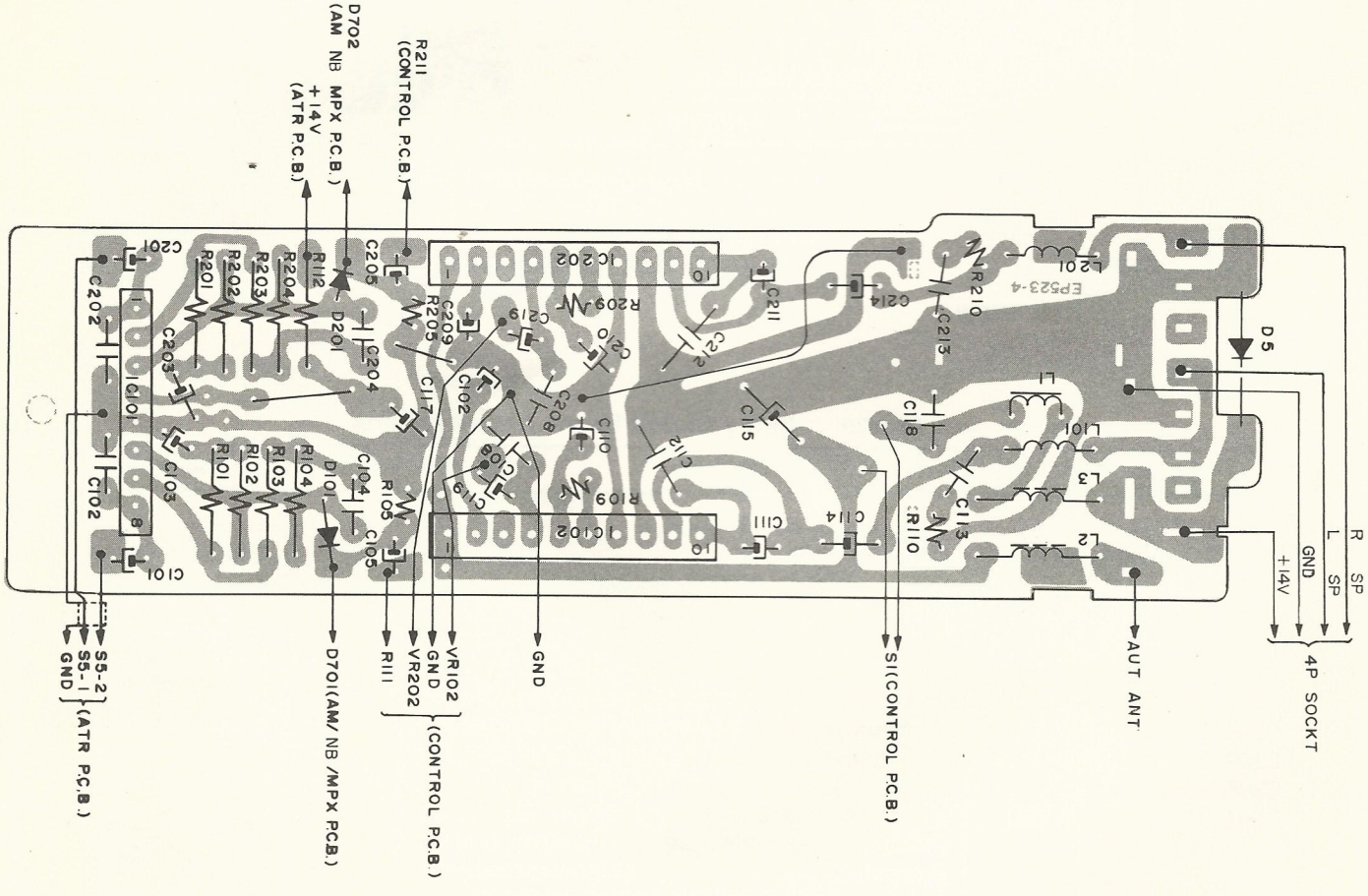

BOTTOM VIEW

Ref. No. 115

CAP – 16

AMPLIFIER CIRCUIT BOARD ASSEMBLY PARTS LIST (CAP-16)

Ref. No.	Description	Part No.
	Amplifier circuit board (Empty)	EP-523-4
IC102, 202	Power amplifier IC TA7222P	ETI-37
IC101	Pre-amplifier IC LA3160	ETI-43
L1	Choke transformer	ELS-94
L101, 201	Filter coil	ELA-33
L2, 3	Filter coil	ELA-145
C115	Electrolytic capacitor 16V 1000μF	ECC
C114, 214	Electrolytic capacitor 10V 470μF	ECC
C117	Electrolytic capacitor 16V 220μF	ECC
C110, 210, 111, 211	Electrolytic capacitor 10V 100μF	ECC
C103, 203	Electrolytic capacitor 10V 47μF	ECC
C116	Electrolytic capacitor 16V 100μV	ECC
C109, 209, 119, 219	Electrolytic capacitor 16V 4.7μV	ECC
C101, 201, 105, 205	Tantalum electrolytic capacitor 10V 4.7μF	ECC
C112, 212	Polyester film capacitor 16V 0.1μV ± 20%	ECC
C104, 204	Polyester film capacitor 16V 0.01μF ± 20%	ECC
C113, 213, 118	Ceramic capacitor 10V 0.022μF ZF	ECC
C102, 202	Ceramic capacitor 10V 820pF YP	ECC
C108, 208	Ceramic capacitor 10V 220pF YP	ECC
R110, 210	Carbon film resistor 4.7 ohm 1/4W ±5%	ECR
R109, 209	Carbon film resistor 68 ohm 1/4W ±5%	ECR
R101, 201	Carbon film resistor 100 ohm 1/4W ± 5%	ECR
R112	Carbon film resistor 330 ohm 1/4W ± 5%	ECR
R111	Carbon film resistor 680 ohm 1/4W ± 5%	ECR
R103, 203	Carbon film resistor 10K ohm 1/4W ± 5%	ECR
R105, 205	Carbon film resistor 22K ohm 1/4W ± 5%	ECR
R102, 202	Carbon film resistor 120K ohm 1/4W ± 5%	ECR
R104, 204	Carbon film resistor 560K ohm 1/4W ± 5%	ECR
D5	Diode DS135(D)	ETD-DS135

AUTOMATIC TAPE REVERSE (ATR) CIRCUIT BOARD COMPONENT LOCATION GUIDE

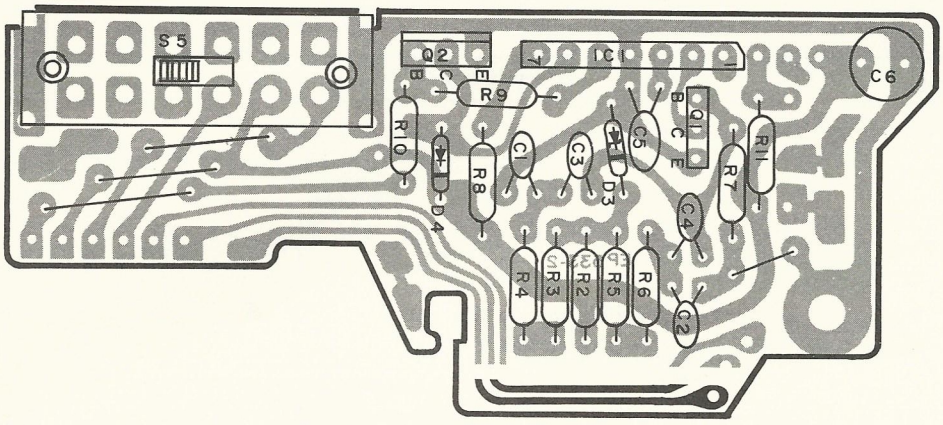

TOP VIEW

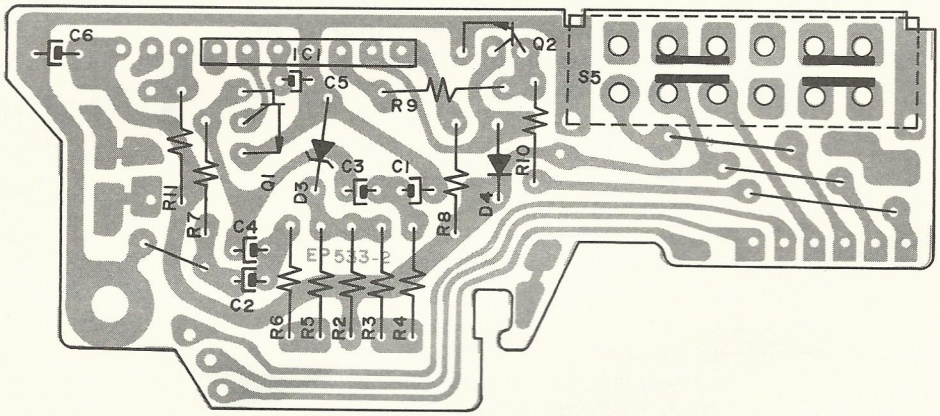

BOTTOM VIEW

Ref. No. 72 CAP-1 **ATR Circuit Board Assembly Parts List**

Ref. No.	Description	Part No.
	ATR circuit board (Empty)	EP-533-2
IC1	IC Autoreverse control AN6250	ETI-36
Q2	Transistor 2SD560 or 2SD635	ETTD-560
Q1	Transistor 2SD2021 (RS)	ETD-2021
C6	Electrolytic capacitor 16V 220 μF	ECC
C3, 4	Tantalum electrolytic capacitor 10V 4.7 μF	ECC
C1, 2	Tantalum electrolytic capacitor 16V 1 μF	ECC
C5	Solid aluminum electrolytic capacitor 16V 1 μF	ECC
R9	Carbon film resistor 1/4W 22 ohm ±5%	ECR
R8	Carbon film resistor 1/4W 150 ohm ±5%	ECR
R2	Carbon film resistor 1/4W 330 ohm ±5%	ECR
R1	Carbon film resistor 1/4W 1K ohm ±5%	ECR
R10	Carbon film resistor 1/4W 2.2K ohm ±5%	ECR
R11	Carbon film resistor 1/4W 3.3 ohm ±5%	ECR
R3, 4, 5, 6	Carbon film resistor 1/4W 4.7K ohm ±5%	ECR
R7	Carbon film resistor 1/4W 10K ohm ±5%	ECR
D4	Diode W03C	ETD-W03C
D3	Zener diode HZ7C	ETD-HZ7C
S5	Slide switch	ESS-172

CONTROL SHAFT CIRCUIT BOARD COMPONENT LOCATION GUIDE

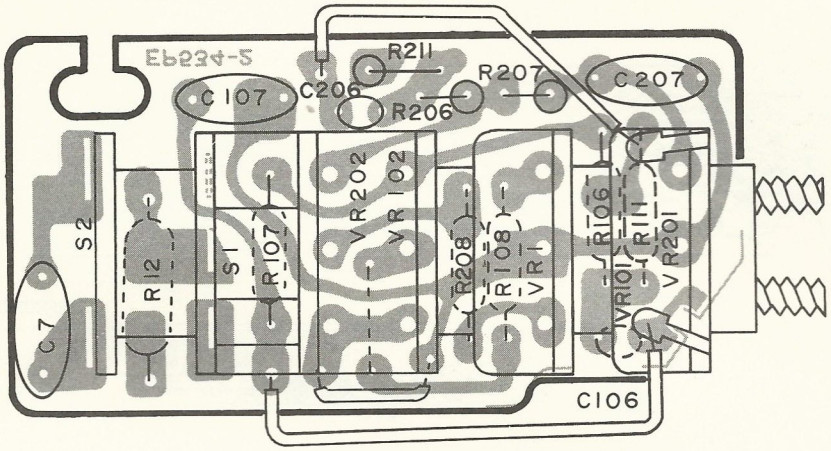

TOP VIEW

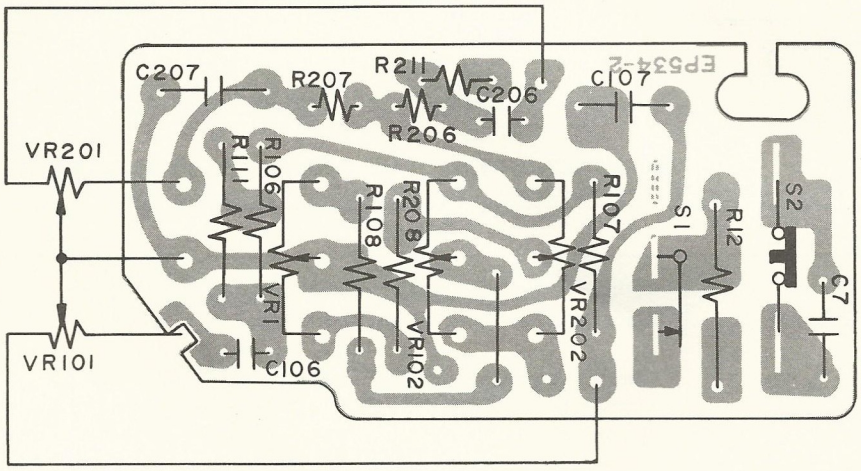

BOTTOM VIEW

Ref. No. 104 CAP-13 Control Shaft + Circuit board Parts List

Ref. No.	Description	Part No.
	Control circuit board (Empty)	EP-534-2
C106, 206	Tantalum electrolytic capacitor 16V 0.1 μF	ECC
C7	Polyester film capacitor 10V 0.1 μF ±20%	ECC
C107, 207	Polyester film capacitor 10V 0.047 μF ±20%	ECC
R12	Carbon film resistor 1/2W 150 ohm ±5%	ECR
R108, 208	Carbon film resistor 1/4W 680 ohm ±5%	ECR
R106, 206	Carbon film resistor 1/4W 1.5K ohm ±5%	ECR
R107, 207	Carbon film resistor 1/4W 2.2K ohm ±5%	ECR
VR101, 201	Tone control 10K ohm	ECRV-212
VR102, 202	Volume control 50K ohm	ECRV-212
VR1	Balance control	ECRV-212
S1	Main switch	ECRV-212
S2	Program switch	ECRV-212

LED, RELAY FLEXIBLE CIRCUIT BOARD COMPONENT LOCATION GUIDE

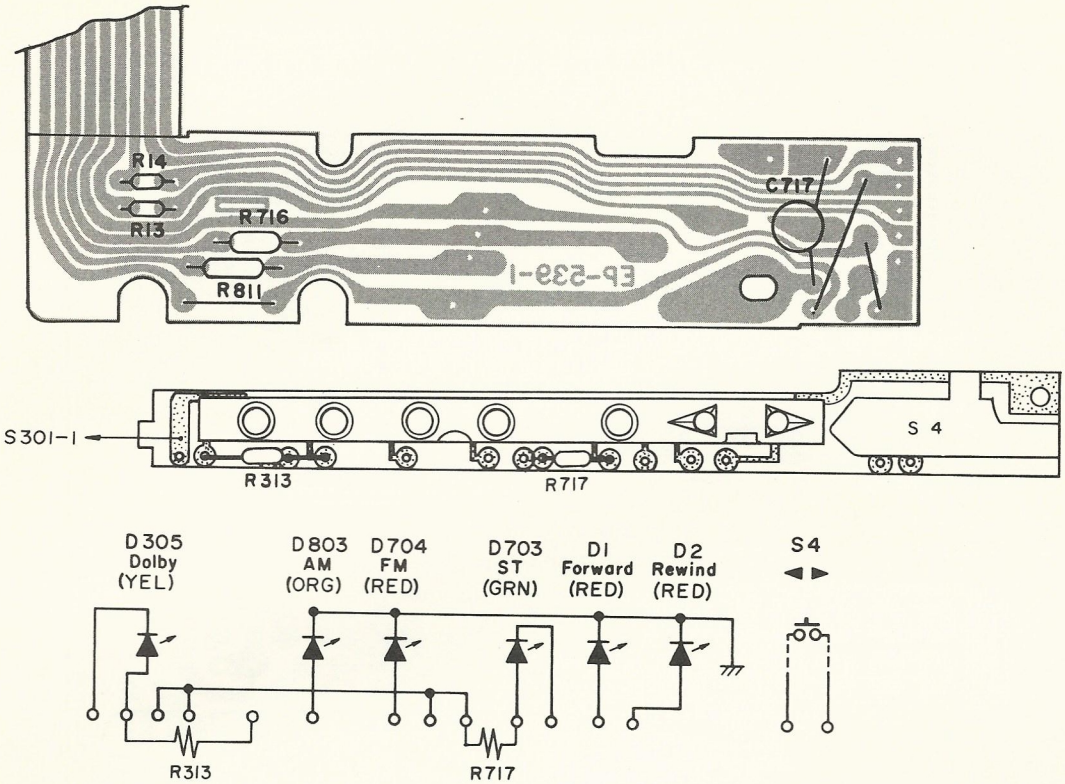

Ref. No. 113 CTY-6 LED, Relay Circuit Board Parts List

Ref. No.	Description	Part No.
	Relay + Flexible circuit board (Empty)	EP-539-1
D305, 803, 703, 704	LED indicator light circuit board ass'y	
D1, 2		EIX-1-0
C717	Ceramic capacitor 0.022μF 16V 2F	ECC-0022
R313, 717, 13, 14	Carbon film resistor 1K ohm 1/8W ±5%	ECR-1K
R811, 716	Carbon film resistor 1K ohm 1/4W ±5%	ECR-680
N1	5P socket with wire	ESP-57
P4	4P angle plug	ESP-58
S4	Program switching leaf	PL-2275
	Round rivet 2 x 2	050202
	LED protector	MP-1298

TUNING/WAVEBAND SELECTOR CIRCUIT BOARD COMPONENT LOCATION GUIDE

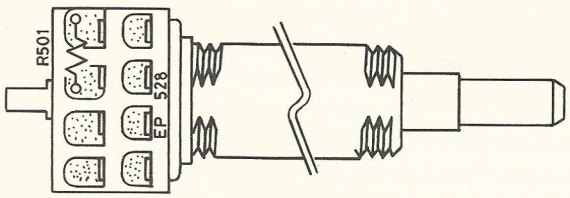

Ref. No. 107 CRY-12A Tuning + Waveband Selector & Circuit Board Parts List

Ref. No.	Description	Part No.
	Waveband selector circuit board	EP-528
S501	Tuning + waveband selector	ESS-171B
R501	Carbon film resistor 1/8W 4.7K ohm + 5 %	ECR-4.7K

WIRING DIAGRAM

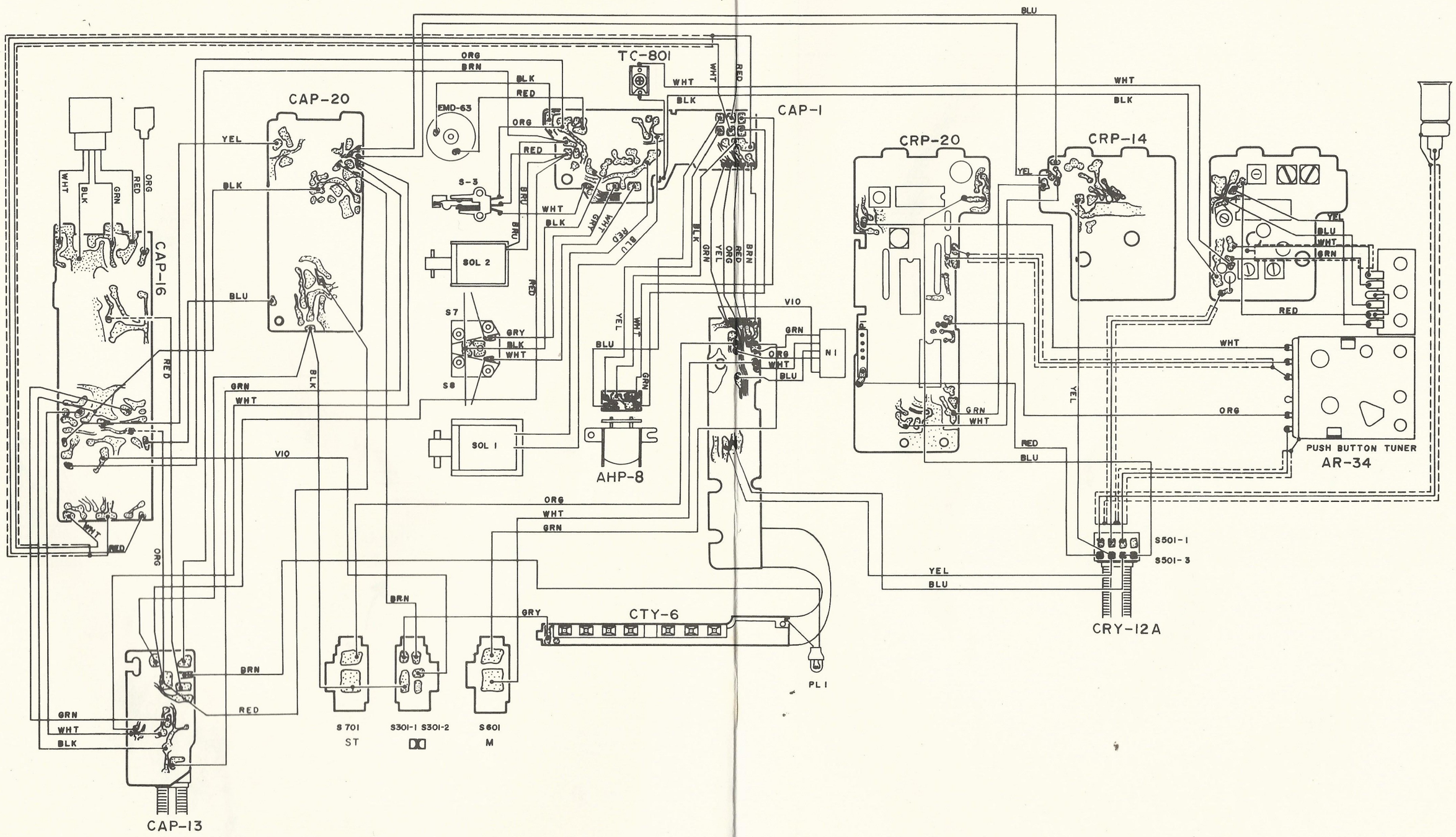

EXPLODED VIEW — CABINET

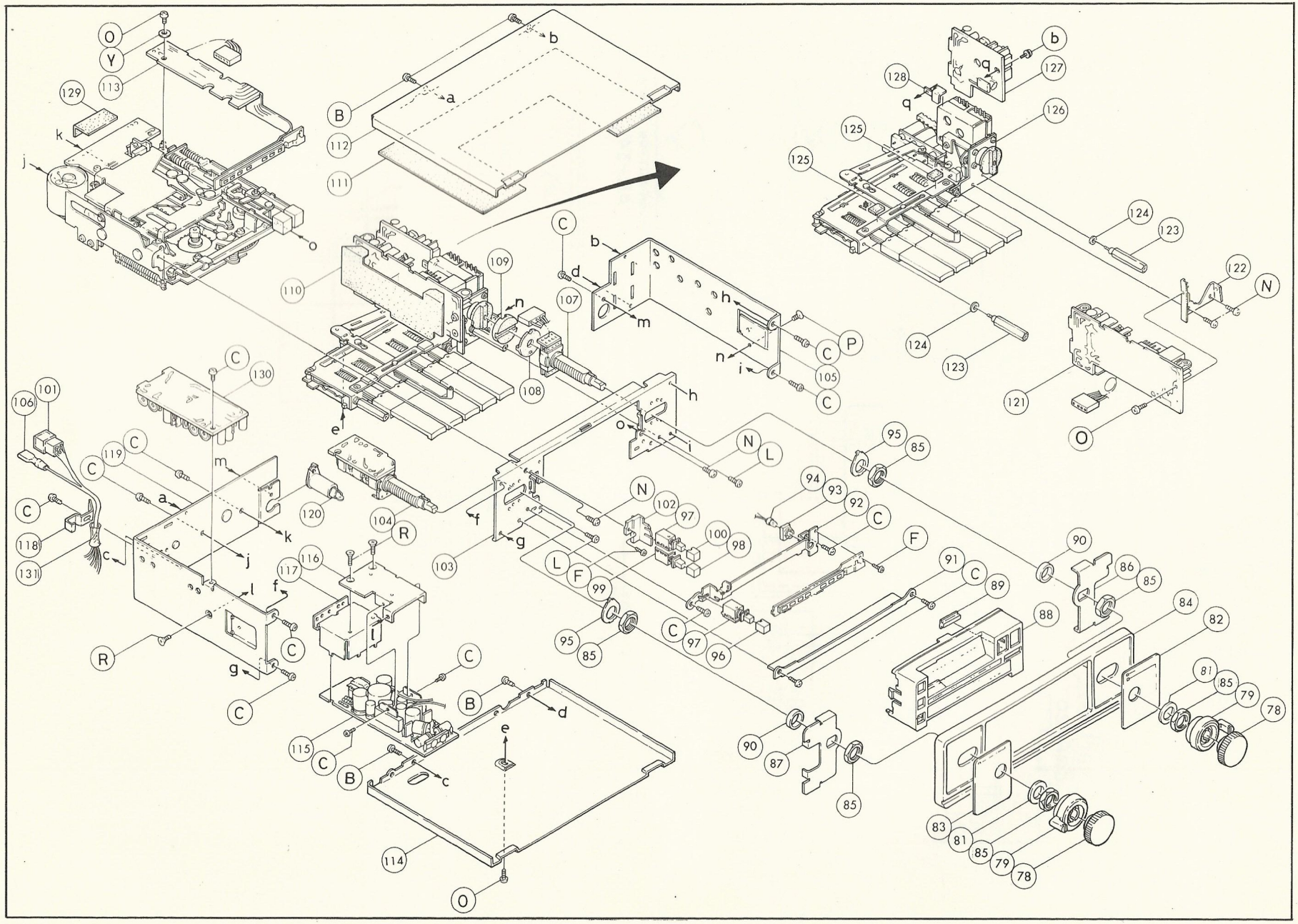

EXPLODED VIEW – MECHANISM

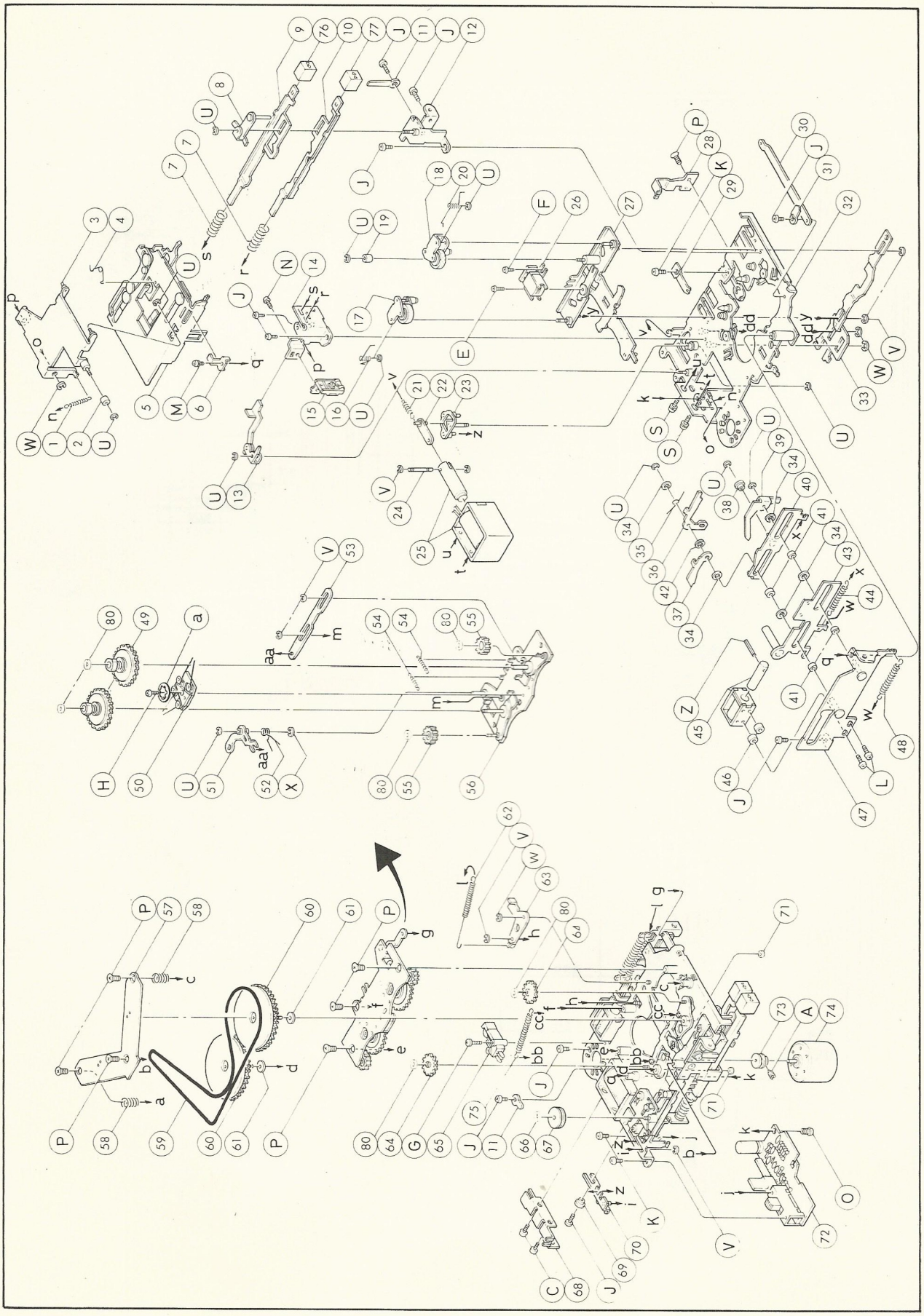

MECHANICAL PARTS LIST

REF. NO.	DESCRIPTION	PART NO.
1	Cassette tray spring	SC-295
2	Arm shaft roller	CC-953
3	Cassette tray tilter ass'y	CMK-23
4	Tray spring	SB-69
5	Cassette tray ass'y	CMK-24
6	Cassette tray guide	PL-2290
7	Lever spring	SC-292
8	FF/REW changing arm ass'y	CMK-17
9	FF/REW lever (R)	PL-2240
10	FF/REW lever (L)	PL-2241
11	Terminal lug	PP-35
12	FF/REW lever holder (B) ass'y	CMK-18
13	FF/REW lock/release arm ass'y	CMK-14
14	FF/REW lever holder (A) ass'y	CMK-16
15	Aerial trimmer capacitor	ECCV-20
16	Pinchroller spring (L)	SB-68
17	Pinchroller ass'y (L)	AA-606
18	Pinchroller ass'y (R)	AA-607
19	Head chassis retract roller	CC-949
20	Pinchroller spring (R)	SB-67
21	Solenoid spring	SC-290
22	Solenoid arm ass'y	CMK-15
23	Reverse arm ass'y	CMK-13
24	Solenoid pin	CC-963
25	Solenoid	ESR-56
26	Tape head	AHP-8
27	Head chassis ass'y	CMK-3
28	Relay PC board bracket	PL-2278
29	Head chassis clamp	PL-2251
30	Head chassis actuation lever ass'y	CMK-7
31	Head chassis actuation lever guide	PL-2257
32	Mechanism frame ass'y	CMK-5
33	Head chassis retraction lever ass'y	CMK-4
34	Washer	PP-461
35	Arm spring	ST-52
36	Lever hold arm	PL-2246
37	Lock arm	PL-2245
38	Lock roller	CC-938
39	Release arm	PL-2248
40	Release lever ass'y	CMK-19
41	Roller ϕ 2.5 x 1.2mm	CC-974
42	Washer	PP-465
43	Cassette slide-in lever ass'y	CMK-20
44	Eject spring (A)	SC-296
45	Solenoid	ESR-57
46	Solenoid bush	CC-937
47	Cassette slide-in lever guide ass'y	CMK-21
48	Eject spring (B)	SC-297
49	Take-up reel table	AA-588
	(Applicable Serial No. 101000001 to No. 101000600)	
	Take-up reel table	AA-687
	(Applicable Serial No. after 101000600)	
50	ATS switch	AA-605

REF. NO.	DESCRIPTION	PART NO.
51	FF/REW arm ass'y	CMK-6
52	FF/REW spring	ST-53
53	FF/REW lever ass'y	CMK-10
54	FF/REW gear spring	SC-291
55	FF/REW gear	MP-1256
56	Reel table chassis ass'y	CMK-11
	(Applicable Serial No. 101000001 to No. 101000600)	
	Reel table chassis ass'y	CMK-38
	(Applicable Serial No. after 101000600)	
57	Flywheel holder ass'y	CMY-31
58	Flywheel holder adjustment spring	SC-289
59	Drive belt	MR-206
60	Flywheel	CC-917
61	Polyslider washer	PN-531
62	Head chassis spring	SC-293
63	Head chassis retraction arm	PL-2277
64	Relay gear	MP-1255
65	Skelton switch	ESS-169
66	Polyslider washer	PN-530
67	Tension pulley	MP-1381
68	Mechanism mounting bracket	PL-2276
69	Lever guide roller	CC-961
70	Slide switch actuation lever ass'y	CMK-12
71	Capstan sleeve	MP-1280
72	ATR PC board ass'y	CAP-1
73	Motor pulley (A) ϕ 11.85mm	CS-457-1
	Motor pulley (B) ϕ 11.95mm	CS-457-2
	Motor pulley (C) ϕ 12.05mm	CS-457-3
	Motor pulley (D) ϕ 11.90mm	CS-457-4
	Motor pulley (E) ϕ 12.00mm	CS-457-5
	Note: Select a proper pulley among 5 kinds of the above, to the respective unit.	
74	Motor	EMD-63
75	Gear spring	SC-294
76	FF/REW button (R)	MP-1368
77	FF/REW button (L)	MP-1367
78	Front knob	MP-1371
79	Rear knob	MP-1372
80	Polyslider washer	PN-514
81	Plain washer ϕ 10mm	010101
82	Trimplate inlay 130mm (R)	HPN-1045
	Trimplate inley 142mm (R)	HPN-1047
83	Trimplate inlay 130mm (L)	HPN-1044
	Trimplate inlay 142mm (L)	HPN-1046
84	Trimplate	MP-1374
85	Hex. nut ϕ 10mm	0201020
86	Bracket 52mm cutout (R)	PL-2289
87	Bracket 52mm cutout (L)	PL-2288
88	Nosepiece ass'y	CMM-15
	Nosepiece	MP-1362
	Indicator plate	MP-1364
	Dial scale	MP-1363
	Lenz (Red) FM	MP-1361(B)x1

SCHEMATIC DIAGRAM

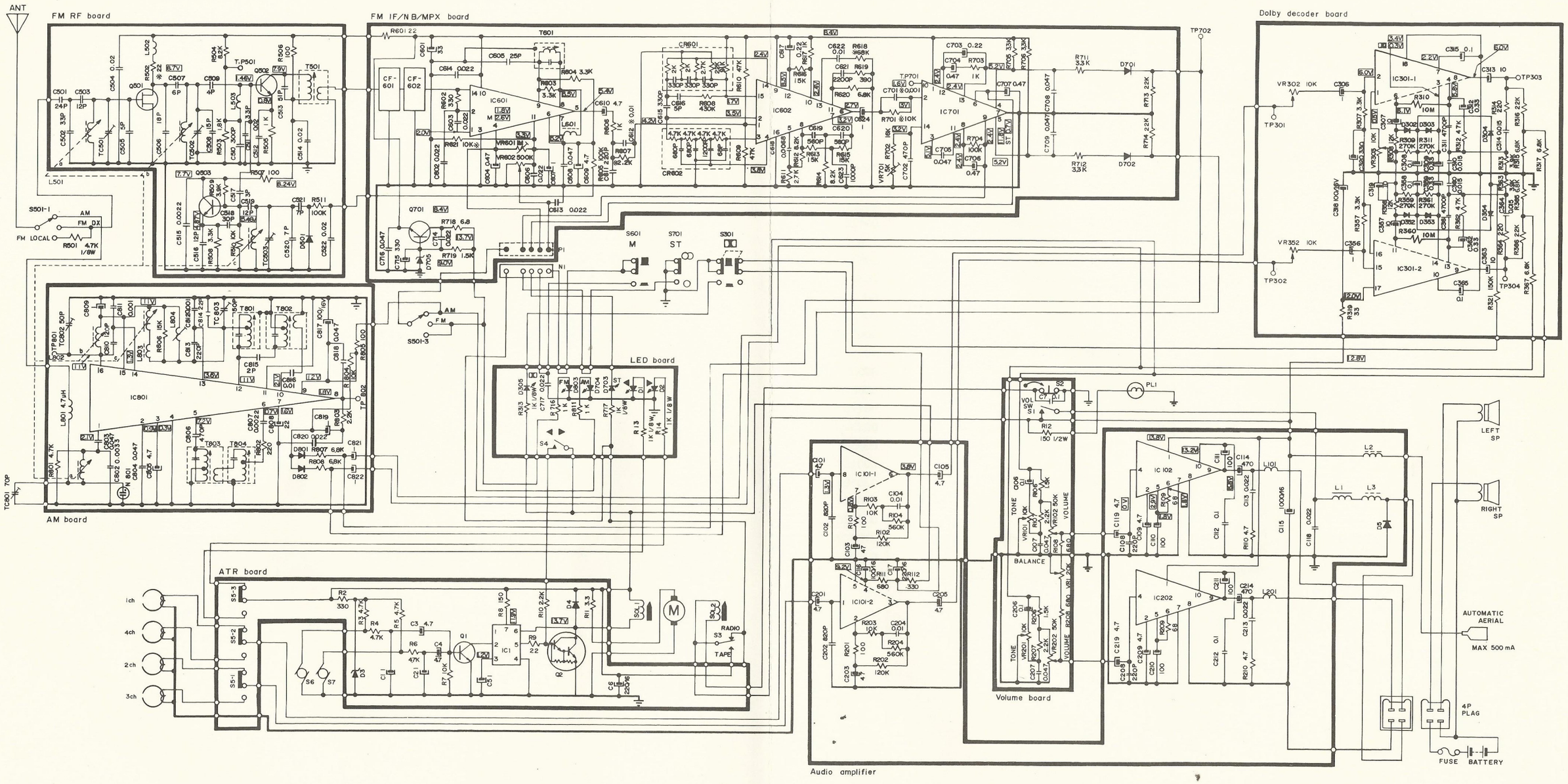

MECHANICAL PARTS LIST

REF. NO.	DESCRIPTION	PART NO
	Lenz (Green) ST	MP-1361(B)x2
	Lenz (Yellow) Dolby	MP-1361(B)x3
	Lenz (Orange) AM	MP-1361(B)x4
	Lenz (Red) Program indicator	MP-1360(A)
	Shading screen	PN-532
	Shading piece	PN-537
	Felt cushion	PN-536
	Cassette door shaft	CC-969
	Cassette door	PL-2316
	Shaft holding piece	PP-460
	Cassette door spring	SC-298
89	Program selector button	MP-1369
90	Shaft adjustment spacer (B) 3mm	MP-1105
91	Sub-front ass'y (B)	PL-2281
92	Switch mounting bracket	PL-2282
93	Lamp holder - Rubber	MR-207
94	Pilot lamp	EIL-49
95	Dogleg location washer	PL-1922
96	Push button Mute	MP-1370x2
97	Push switch ass'y (A)	CRT-3
	Push switch	ESS-161
	PC board (B)	EP-527-1
98	Push button (Dolby)	MP-1376x2
99	Push switch ass'y (B)	CRT-4A
	Push switch	ESS-161
	PC board (C)	EP-543
100	Push button ST	MP-1370x1
101	4P socket wires	AH-158 or (AH-224)
102	Switch holder (2)	MP-1284
103	Front chassis (A)	PL-2280
104	Control shafts & PC board ass'y	CAP-13
105	Side chassis (B)	PD-308
106	Aerial power lead	AH-159
107	Tuning/Waveband selector & PC board Ass'y	CRY-12A
108	Oldham's coupling (A)	MP-1276
109	Oldham's coupling (B)	MP-1277
110	Insulation paper - PC board	PN-522
111	Insulation paper - Top cover	PN-516
112	Top cover	PD-305
113	Relay PC board Ass'y	CTY-6
114	Bottom cover	PD-309
115	Amplifier PC board ass'y	CAP-16
116	Heatsink plate	PL-2272
117	Choke shield case	PL-2271
118	Cord clamp	PL-2190
119	Side chassis ass'y	CMK-36
120	Aerial socket	ESJ-23
121	FM IF/MPX/NB PC board ass'y	CRP-20
122	FM IF/MPX/NB PC board bracket	PL-2279
123	Tuner mounting shaft	CS-460

REF. NO.	DESCRIPTION	PART NO.
124	Plain washer ϕ2.6mm	010268
125	Rubber cushion	PN-520
126	Preset tuner	AR-34
127	AM PC board ass'y	CRP-14
128	AM PC board mounting bracket	PL-2284
129	Insulation paper - ATR PC board	PN-534
130	Dolby PC board ass'y	CAP-20
131	Vinyl tube	WTB-6-60
A	Slotted head screw M2 x 3 mm	009203
B	Pan head tapping screw ϕ3 x 4mm	0863042
C	Pan head tapping screw ϕ3 x 5mm	0863052
E	Pan head screw ϕ2 x 3mm	006203
F	Pan head screw ϕ2 x 4mm	006204
G	Pan head screw ϕ2 x 8mm	006208
H	Pan head screw ϕ2.3 x 6mm	006236
J	Pan head screw ϕ2.6 x 3mm	006263
K	Pan head screw ϕ2.6 x 4mm	006264
L	Pan head screw ϕ2.6 x 6mm	006266T
M	SEMS screw ϕ2.6 x 6mm	0093266
N	Pan head screw ϕ3 x 4mm	006304
O	Pan head screw ϕ3 x 5mm	006305
P	Flush head screw ϕ2.6 x 6mm	002266
R	Flush head tapping screw ϕ3 x 6mm	0823062
S	SEMS screw ϕ3 x 5mm	093305
U	E-ring ϕ15mm	030154
V	E-ring ϕ1.9mm	030194
W	E-ring ϕ2.3mm	030234
X	E-ring ϕ3mm	030306
Y	Plain washer ϕ3mm	010305
Z	Roll pin ϕ2 x 12mm	070212
a	Inner toothed washer ϕ2.3	014233
b	Sens screw ϕ2.6 x 5mm	093265
	4-P Speaker wire (1 pc.)	AH-104 (AH-289)
	Grounding wire (1 pc.)	AH-45
	Supporting strap (1 pc.)	PP-159
	Plain washer ϕ5mm (1 pc.)	010508
	Spring washer M5mm (1 pc.)	0115210
	Hex. nut M5mm (1 pc.)	020540
	Hex. volt M5mm (1 pc.)	0705016
	Hex. nut M6mm (1 pc.)	020650
	Spring washer M6mm (1 pc.)	0116115
	Plain washer ϕ6mm (1 pc.)	0106508
	Shaft adjustment spacer (A) 7mm (2 pcs.)	MP-1104
	Rubber tube (1 pc.)	MR-188