Service Manual MODEL MCC-7008R

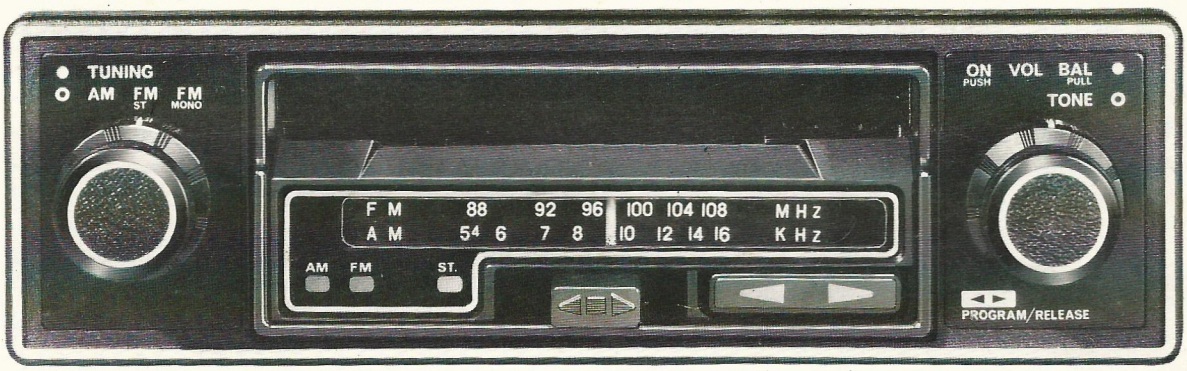

In-Dash
Autoreverse Cassette Stereo
With AM/FM/MPX Radio

CONTENTS

SPECIFICATIONS 2
GENERAL INFORMATION 3
BLOCK DIAGRAM 4
DISASSEMBLY INSTRUCTIONS 5
DIAL CORD STRINGING 5
LUBRICATION 6
HEAD AZIMUTH ADJUSTMENT 6
TAPE SPEED ADJUSTMENT 6
MEASUREMENT OF TAKE-UP REEL TABLE TORQUE 7
TAPE HEAD AND CAPSTAN CLEANING INSTRUCTION 7
ALIGNMENT PROCEDURES 7
TROUBLE SHOOTING GUIDE 10
EXPLODED VIEW 14
MECHANISM PARTS LIST 17
RADIO TUNER CIRCUIT BOARD 19
IF & MPX CIRCUIT BOARD 20
POWER AMPLIFIER CIRCUIT BOARD 22
PRE AMPLIFIER & ATR CIRCUIT BOARD 23
ELECTRIC MOTOR SPEED REGULATOR CIRCUIT BOARD 24
OTHER CIRCUIT BOARD PARTS LIST 25
WIRING DIAGRAM 26
CIRCUIT VOLTAGE GUIDE 27
SCHEMATIC DIAGRAM 28

SPECIFICATIONS:

AM Radio section

Circuit system:	Superheterodyne
Frequency coverage:	520 KHz–1640 KHz
Tuning system:	Manual μ tuning
Intermediate frequency:	455 KHz
Maximum sensitivity:	20 μV
Quieting sensitivity:	20 μV (at 20 dB S/N)
Image ratio:	70 dB
IF Rejection ratio:	50 dB

FM Radio section

Circuit system:	Superheterodyne
Frequency coverage:	87.5 MHz–109 MHz
Tuning system:	Manual μ tuning
Intermediate frequency:	10.7 MHz
Maximum sensitivity:	5 μV
Quieting sensitivity:	5 μV (at 30 dB S/N)
–3 dB Limiting sensitivity:	10 μV
Image ratio:	48 dB
IF Rejection ratio:	90 dB
Stereo separation:	FM MPX, 30 dB (at 1 KHz)

Tape section

System:	Auto reverse 2 program 2 channel stereo tape player
Tape speed:	1-7/8 ips. (4.75 cm/sec)
FF. REW. Time:	Max. 90 sec (C-60)
Wow and flutter:	0.25% RMS (JIS)
Program crosstalk:	Better than 40 dB
Channel crosstalk:	Better than 30 dB
S/N ratio:	Better than 55 dB
Total harmonic distortion:	1% (at 1W Output power)
Output:	7W x 2 (Maximum output)
Output impedance:	4 ohm x 2
Reproduction frequency response:	50 Hz–10 KHz ± 6 dB (Tone max.)
Tone control:	Bassboost 7 dB (at 125 Hz) High cut 13 dB (at 6.3 KHz)
Power supply voltage:	DC 14V (11V–16V)
Polarity:	Negative ground
Max current drain:	5A
Weight:	1.8 Kg net
Dimension:	Width 178mm, Height 44mm, Depth 150 mm

GENERAL INFORMATION

SEMICONDUCTORS :	5 IC, 20 TR, 27 Diode
Radio Section :	2 IC, 9 TR, 11 Diode
Tape & Audio :	3 IC, 11 TR, 16 Diode

AM RADIO

RF Amplifier	Q801	2SC930
Frequency Converter	Q802	2SC930
IF Amplifier 1st	Q901	2SC930
2nd	Q902	2SC930
Radio Detector	D902	1N60 or 2-1K60
A.G.C.	D901	1N60 or 2-7K60
Switching Diode	D904	1S2788 or 1S2787
	D905	1S2788 or 1S2787
Voltage Regulator	D903	HZ7C

FM RADIO

RF Amplifier	Q501	2SC668
Frequency Converter	Q502	2SC668
Oscillator	Q503	2SC930
IF Amplifier 1st	Q601	2SC930
2nd	IC601	LA1111P
MPX. Amplifier	Q701	2SC536
MPX. Separator	IC701	HA1156
A.F.C.	D501	1S2236
Radio Detector	D601	2-1K60
	D602	2-1K60
Switching Diode	D701	1S2788 or 1S2787
	D702	1S2788 or 1S2787
Voltage Regulator	D703	RD9.1FB or CZ092

TAPE & AUDIO AMPLIFIER

Pre-Amplifier	IC1	TA7108P
Main Amplifier	IC101	TA7205P
	IC201	TA7205P
Switching Diode	D101	1S2788 or 1S2787
	D201	1S2788 or 1S2787
	D13	1S2788 or 1S2787
Protector Diode	D12	DS130Y or equivalent
ATR	Q2, 3, 5 (3 Transistors)	2SA854 or equivalent
	Q1, 4 (2 Transistors)	2SD235 or equivalent
	Q6, 7, 8, 9 (4 Transistors)	2SC945 or equivalent
	D1, 2, 3, 4, 5, 6, 14 (7 Diodes)	1S2788 or 1S2787
Electric Speed Regulator	Q10	JA1050 or equivalent
	Q11	2SD235
	D7, 8 (2 Diodes)	CDG21
	D9, 10, 11 (3 Diodes)	1S2788 or 1S2787

BLOCK DIAGRAM

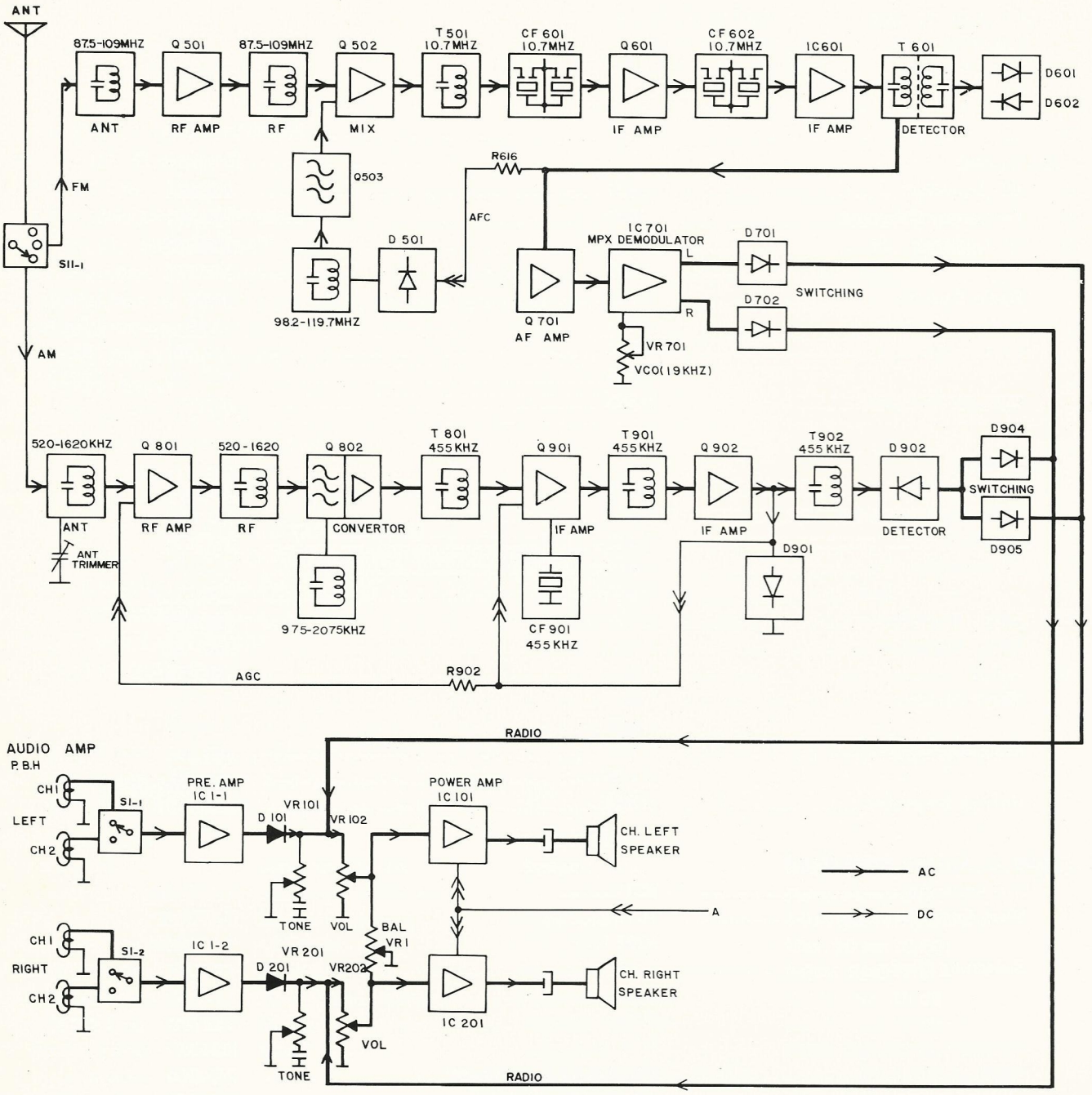

DISASSEMBLY INSTRUCTION

Removal of case cover is as following chart.

REMOVAL	QUANTITY OF REMOVAL SCREW	FIGURE CODE & QUANTITY		HOLDING FOR
TOP COVER	1 pc.	A	1 pc.	Top Cover
BOTTOM COVER	2 pcs.	B	2 pcs.	Bottom Cover
NOSEPIECE	4 pcs.	C	4 pcs.	Nosepiece
SIDE COVER (Right Side)	6 pcs.	D	3 pcs.	Side Cover
		E	2 pcs.	Mechanical Chassis
		F	1 pc.	Amplifier
SIDE COVER (Left & Rear)	9 pcs.	G	2 pcs.	Side Cover
		H	3 pcs.	IF. MPX. Circuit Board
		J	2 pcs.	Cord Clamp
		F	2 pcs.	Amplifier

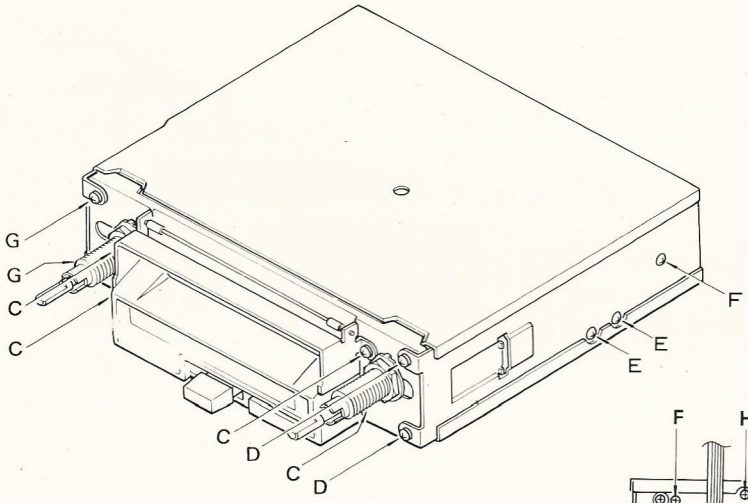

Figure 1

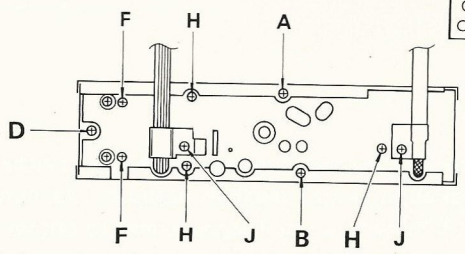

Figure 2

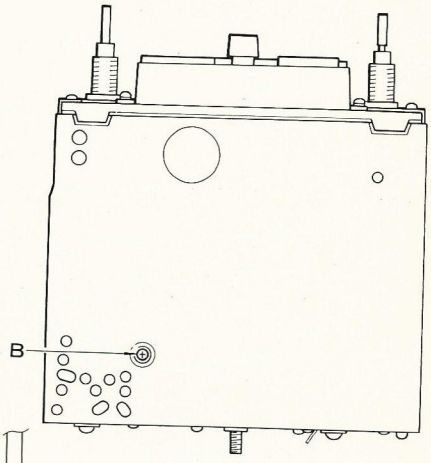

Figure 3

DIAL CORD STRINGING

Loop the dial string in the direction of the arrows.

The μ-Tuner should be turned to counter clockwise fully up to end.

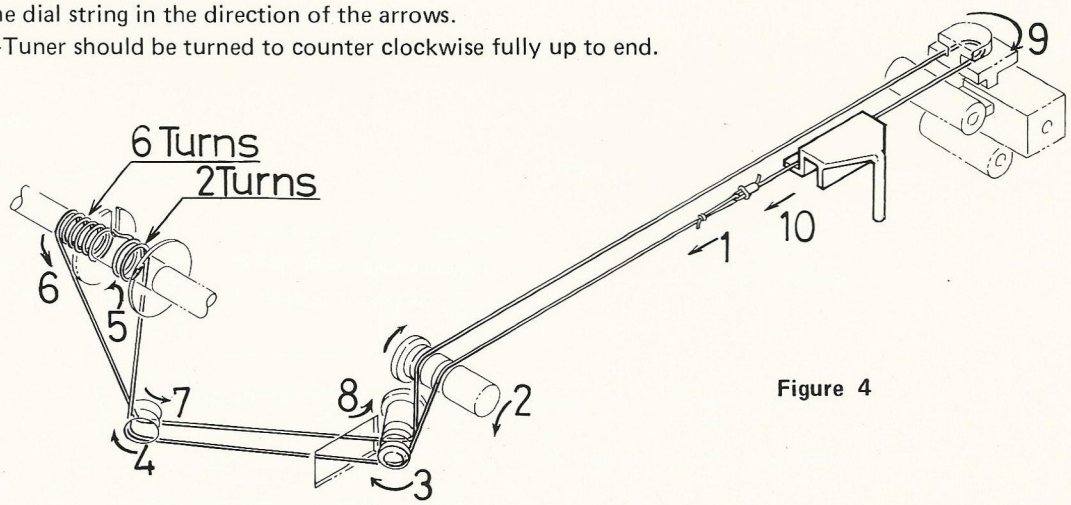

Figure 4

LUBRICATION

All parts are lubricated at the factory; additional lubrication will be required only when moving parts bind, or parts are replaced. If you do lubricate parts, use only very small amounts, and be sure to use the correct lubricant. For the capstan bearing surface, use a very light, high-grade oil specifically made for tape mechanisms. For the capstan thrust bearing, use a light grease (again, specially formulated for such applications). For the indexing mechanism and other such sliding/moving parts, use a lubricant such as molybdenum disulfide. Be sure to use any and all of these lubricants sparingly and avoid contact with any other part.

HEAD AZIMUTH ADJUSTMENT

1) Connect V.T.V.M. to the speaker output of the set, and playback 10 kHz test tape.
2) Adjust volume control to medium position, and as shown on figures 5 and 6, align the head azimuth adjustment screw to obtain the maximum output.
3) Repeat the same procedure also in the reverse direction of tape running by operating program selector button. If the maximum output position of the adjustment screw does not agree at each direction, repeat the adjustment until difference becomes minimum.

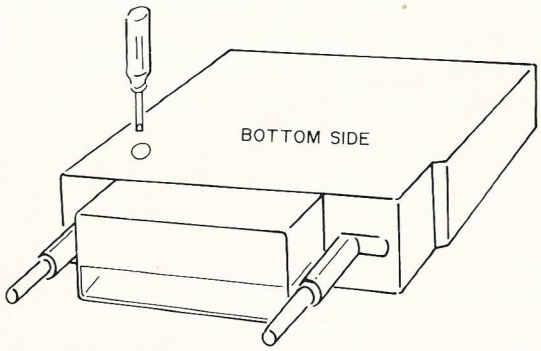

Figure 5

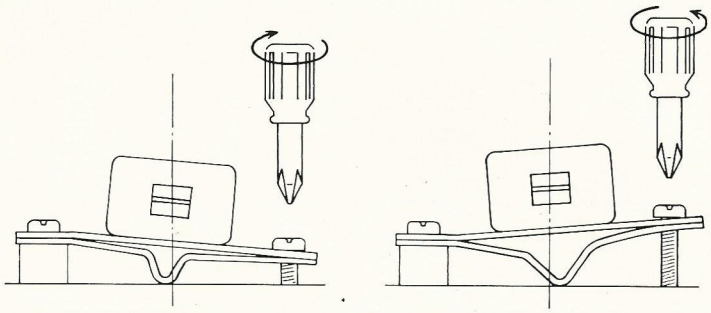

Figure 6

TAPE SPEED ADJUSTMENT

1) Connect digital frequency counter to the speaker output of the set at either channel, and playback 3 kHz test tape.
2) Adjust the volume control to an approximate medium position. As shown on Figures 7 and 8, align the tape speed by turning the semi potentiometer VR2 with a small screw driver to obtain the reading of the digital counter between 3000 Hz and 3090 Hz. If the tape speed readings on both tape running direction are different, both frequencies must be within the above limit.

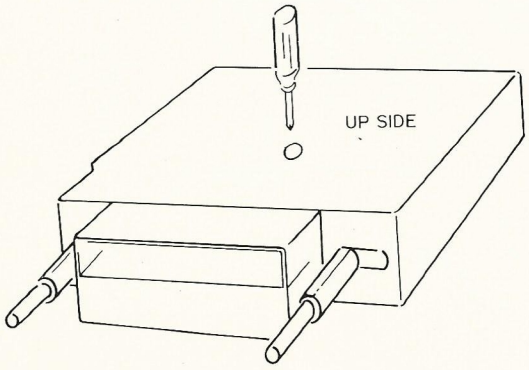

Figure 7

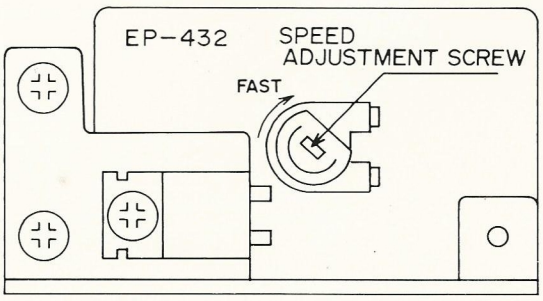

Figure 8

MEASUREMENT OF TAKE-UP REEL TABLE TORQUE

1) Set the unit in PLAY mode.
2) Set the torque gauge or spring balance to take-up reel table of FORWARD direction as shown Figure 9.
3) The reading of torque gauge or spring balance should be 50 to 70 g-cm.
4) Repeat the same procedure on reverse side (REWIND direction). The reading also should be 50 to 70 g-cm.
5) If the torque is out of 50 to 70 g-cm, replace reel table with new one.

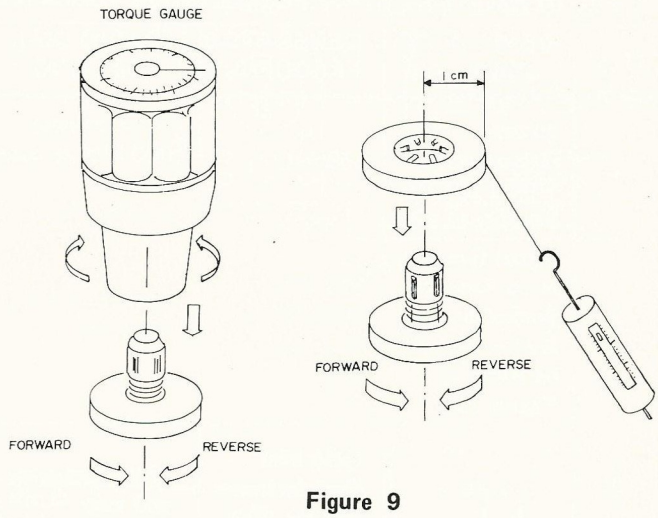

Figure 9

TAPE HEAD AND CAPSTAN CLEANING INSTRUCTION

1) Dip a cotton swab in alcohol and rub gently over the head.
2) Do not use the same swab to clean capstan and pinch-roller.

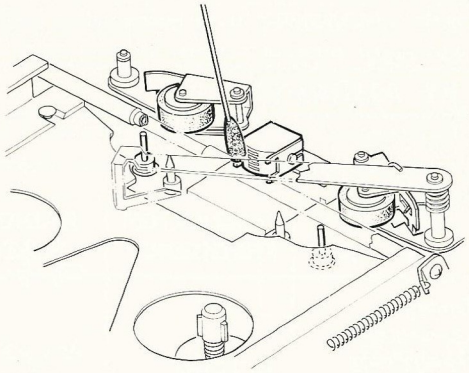

Figure 10

ALIGNMENT PROCEDURES

Alignment is performed at the factory with laboratory test equipment. Therefore, before alignment, the set should be thoroughly checked for circuit troubles.

Equipment required

* Stabilized DC. Power Supply
* AC. Vacuum Tube Volt Meter
* Oscilloscope

For AM Reception :	* AM RF Signal Generator	* Sweep Signal Generator (455 kHz)
For FM Reception :	* FM RF Signal Generator	* Sweep Signal Generator (10.7 MHz)
For MPX. Stereo :	* Digital Frequency Counter	

NOTE :
* Check for specified source voltage (13.8 V) and polarity (negative ground).
* Use a well regulated DC. power supply (5 A) only.
* Connect an output meter (V.T.V.M.) across the speaker or dummy load (4 ohm, 10W wirewound resistor)
* Non-metallic alignment tools must be used.
* Signal input must be kept as low as possible to avoid overload and clipping.
* Repeat adjustment to insure good results.
* Refer to printed circuit board view for the test point locations.

AM IF & RF ALIGNMENT

Press the Radio power switch on, and set the AM/FM switch for AM reception. AM signal generator should be coupled to antenna socket thru dummy antenna. Set the Volume control to the maximum and Tone control to high.

STEP	GENERATOR COUPLING	GENERATOR FREQUENCY	RADIO DIAL SETTING	INDICATOR COUPLING	ADJUSTMENT	REMARKS
1	Sweep Generator to TP801 (L802b) See Figure 12	455 kHz	Approximate 600 kHz at point of non-interference	Oscilloscope to TP901 (R912, 4.7K ohm) See Figure 19	T801, T901 & T902	Adjust for maximum amplitude. Refer to Figure 15
2	Signal Generator to Antenna Socket thru Dummy Antenna Refer to Figure 20	520 kHz Modulation: 400 Hz, 30%	Low frequency end stop	AC. V.T.V.M. across Speaker (L or R) See Figure 11	L804	Adjust for maximum reading
3	– ditto –	1630 kHz Modulation: 400 Hz, 30%	High frequency end stop	– ditto –	TC803	– ditto –
4	Repeat steps 2 and 3, until tuning renge covers exactly from 520 kHz to 1630 kHz.					
5	– ditto –	1400 kHz Modulation: 400 Hz, 30%	Tune to signal	– ditto –	TC801 & TC802	– ditto –
6	With radio installed in car and antenna extended to desired height, tune in a weak station around 1400 kHz and adjust antenna trimmer for maximum output. Refer to Figure 11					

FM IF & RF ALIGNMENT

Press the Radio power switch on, and set the AM/FM switch for FM reception. The Signal Generator output must be kept as low as possible to avoid overload and clipping.

STEP	GENERATOR COUPLING	GENERATOR FREQUENCY	RADIO DIAL SETTING	INDICATOR COUPLING	ADJUSTMENT	REMARKS
1	Sweep Generator to TP501 (FM Tuner Pack) See Figure 18	10.7 MHz	Any point of non-interference	Oscilloscope to TP601 (R614) See Figure 19	T501 & T601	Adjust for maximum amplitude and proper linearity. Refer to Figure 17
2	Signal Generator to Antenna Socket	87.5 MHz Modulation: 400 Hz, 100%	Low frequency end stop	AC.V.T.V.M. across Speaker (Lch. or Rch.) See Figure 11	L501c	Adjust for maximum reading.
3	– ditto –	109.5 MHz Modulation: 400 Hz, 100%	High frequency end stop	– ditto –	TC501	– ditto –
4	Repeat steps 2 and 3 until tuning range covers exactly from 87.5 MHz to 109.5 MHz.					
5	– ditto –	98 MHz Modulation: 400 Hz, 100%	Tune for signal	– ditto –	L501a & L501b	– ditto –

FM MULTIPLEX STEREO ALIGNMENT

Press the Radio power switch on, and set the AM/FM switch for the FM reception.

	RADIO DIAL SETTING	INDICATOR COUPLING	ADJUSTMENT	REMARKS
No input signal from Antenna Socket	Any point of non-interference	Digital Frequency Counter to TP701 (R706) See Figure 19	VR701	Adjust for 19 kHz reading on Frequency Counter

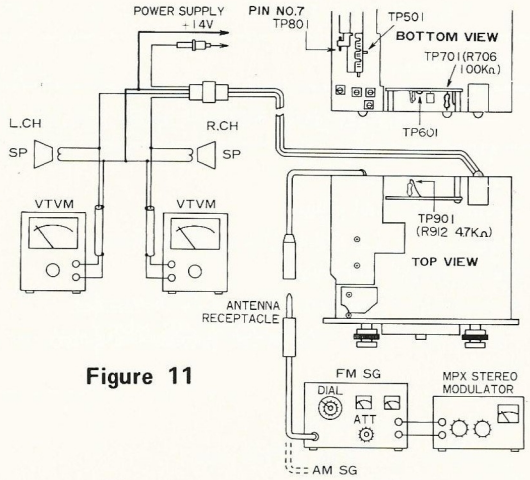

Figure 11

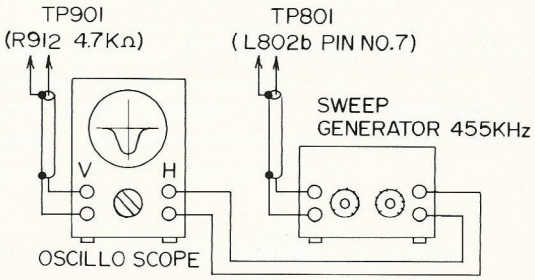

Figure 12

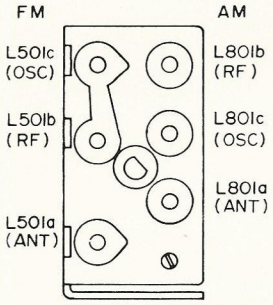

Figure 13

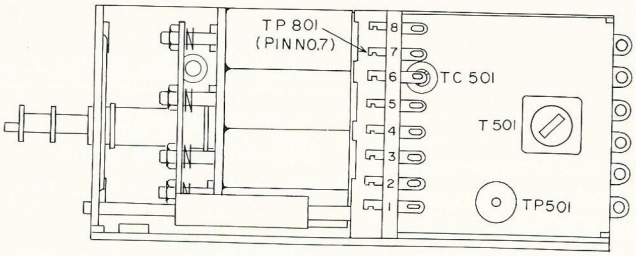

Figure 14

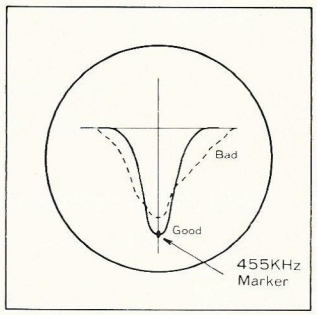

Figure 15

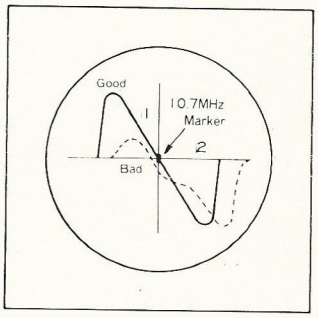

Figure 17

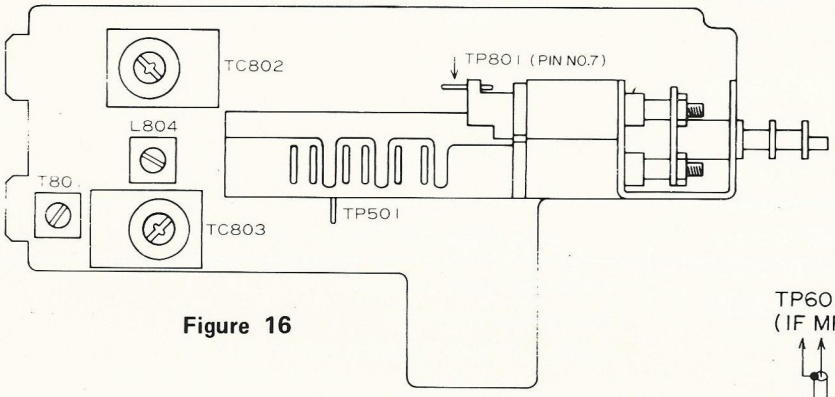

Figure 16

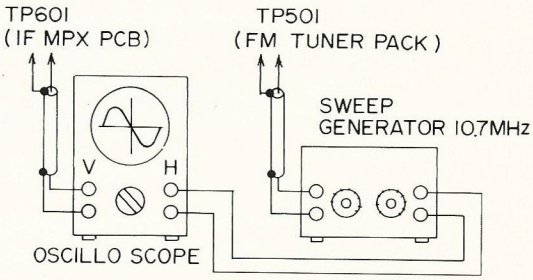

Figure 18

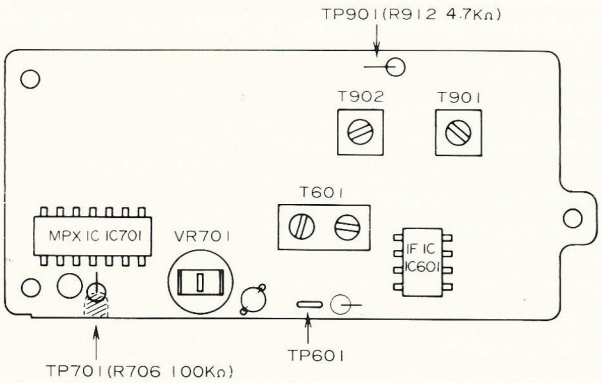

Figure 19

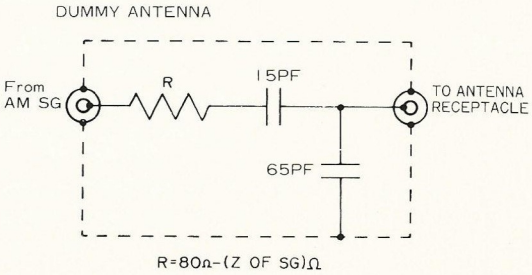

Figure 20

TROUBLE SHOOTING GUIDE

RADIO AND TAPE SECTION

SYMPTOM	DEFECTIVE CIRCUIT	DEFECTIVE POINT AND CAUSE
NO SOUND	Power supply circuit	* Fuse open. * Choke coil (L4) open. * Capacitor (C11, C14, C15 or C16) short circuit. * Diode (D12) defective. * Power supply switch (S6 or S7) defective. * Faulty connection between speaker and connecting cord.
	Output circuit	* Speaker voice coil open. * Capacitor (C118 or C218) open. * Faulty connection between speaker and connecting cord. * Main amplifier defective. Check for power IC (IC101 or IC201) or input signal.
DISTORTED SOUND OR INSUFFICIENT SOUND	Output circuit	* Speaker defective. * Main amplifier defective. * Poor contact between output terminal and speaker.
OSCILLATION	Power supply circuit	* Capacitor (C11 or C15) capacity insufficient or open.
	Output circuit	* Capacitor (C113 or C213) capacity insufficient.

RADIO SECTION

SYMPTOM	DEFECTIVE CIRCUIT		DEFECTIVE POINT AND CAUSE
NO SOUND	AM FM SECTION	Antenna input circuit	* Antenna input defective. Poor antenna contact. Check wiring or function switch (S11-1).
		Power supply circuit	* Power supply defective. Check wiring or function switch (S11-2).
		Output circuit	* Radio output circuit defective. Check wiring or switching diode (D701, D702 or D904)
	AM SECTION	Antenna input circuit	* Antenna input defective. Poor antenna contact. Check wiring or function switch (S11-1).
		Power supply circuit	* Power supply defective. Check wiring or function switch (S11-2).
		RF and IF circuit	* Diode (D902 or D905) defective. * Check for emitter voltage of transistor (Q801, Q802, Q901 or Q902) * IF transformer (T801, T901 or T902) open. * Coil (L801 or L804) open.

SYMPTOM	DEFECTIVE CIRCUIT		DEFECTIVE POINT AND CAUSE
NO SOUND (Cont'd)	FM SECTION	Antenna input circuit	* Antenna input defective. Check wiring or function switch (S11-1).
		Power supply circuit	* Power supply defective. Check wiring or function switch (S11-2).
		MPX and output circuit	* Diode (D701, D702 or D703) defective. * Check for emitter voltage of transistor and each pin voltage of IC (IC701).
		IF circuit	* Ratio detector transformer (T601) defective. * Check emitter voltage of transistor (Q601) and each pin voltage of IC (IC601). * Ceramic filter (CF601 or CF602) defective.
		RF OSC circuit	* FM tuner pack defective. IF transformer (T501) open. Check for emitter voltage of transistor (Q501, Q502 or Q503). Coil (L501 or L502) open.
INSUFFICIENT SOUND	AM FM SECTION	Antenna input circuit	* Poor antenna contact. * Antenna input defective. * Check wiring or function switch
	AM SECTION	RF and IF or detector circuit	* Antenna trimmer mis-alignment. * Deviation in IF transformer (T801, T901 or T902). * Deviation in tracking alignment. * Antenna input defective. Check wiring or function switch (S11-1). * Diode (D901) deteriorated. * Capacitor (C801, C802, C805 or C904) defective.
	FM SECTION	RF and IF or detector circuit	* Deviation in IF transformer (T501 or T601). * Deviation in traking alignment. * Antenna input defective. Check wiring or function switch (S11-1). * Diode (D601 or D602) defective. * Ceramic filter (CF601 or CF602) defective. * Transformer (T501 or T601) defective. * Capacitor (C504, C511 or C601) defective.
DISTORTED SOUND	AM SECTION	Detector circuit	* Diode (D902) defective.
	FM SECTION		* Diode (D601 or D602) defective. * Deviation in transformer (T601) or defective.
OSCILLATION	AM SECTION		* Capacitor (C803, C804, C809, C902, C903, C906, C908 or C910) defective. * Diode (D901) defective.
	FM SECTION		* Capacitor (C511, C603, C605, C606 or C716) defective.
POOR AFC	AFC circuit		* Capacitor (C518) defective. * Diode (D501) defective.
POOR STEREO EFFECT	MPX circuit		* Semi-potentiometer (VR701) mis-aligned. * Mono/Stereo switch (S701) defective. * MPX IC (IC701) defective. * Capacitor (C704) defective.

SYMPTOM	DEFECTIVE CIRCUIT	DEFECTIVE POINT AND CAUSE
STEREO INDICATOR LIGHT DOES NOT FUNCTION EFFECTIVELY	Indicator circuit	* Stereo indicator lamp (PL6) defective. * Resistor (R701) defective. * MPX IC (IC701) defective.
ENGINE NOISE IS EXTREME	Motor compartment	* Missing or poor connection of resistance wire on high tension coil of the car. Insert noise preventing resistor between ignition coil and distributor of the car. * Missing or poor connection of noise silencer by alternator of the car. Install specified noise silencer on the alternator. * Missing or poor connection of grounding wire between engine chassis and engine, transmission and engine chassis of the car.
	Aerial Earth circuit	* Missing or poor connection of earth wire for aerial to earth point of the car chassis.
Less sensitivity or drift occurrs when air conditioner is on.		* If install the set near blower of air conditioner, the extreme temperature (either Hot or Cold) creates tuning or sensitivity drift. Avoid installing the set near air conditioner or if installing the set near air conditioner is unavoidable, isolate the set by isolating material from temperature of air conditioner.
NO SOUND	Pre-amplifier circuit	* Pre-amplifier defective. Check for pre-amplifier IC (IC1) or circuit. * Head lead wire open. * Faulty contact of tape/radio changeover switch (S5).
		* Mechanism defective. Check for running of tape.
	Electric motor speed regulator circuit or motor	Motor does not run. * Check power supply. * Diode (D9, C10 or D11) defective. * Transistor (Q10 or Q11) defective. * Choke L3 defective. * Motor defective. * Motor lead open.
	A.T.R. circuit	Solenoids do not operate. * Solenoids open or short circuit. * Solenoids lead open. * C17 or C18 short circuit. * Transistor (Q1 or Q2) defective. * Transistor (Q3 or Q4) defective. * Diode (D4 or D5) defective.
	Playback head	* Playback head open or short circuit. * Playback head lead open.

SYMPTOM	DEFECTIVE CIRCUIT	DEFECTIVE POINT AND CAUSE
DISTORTED SOUND OR INSUFFICIENT SOUND	Pre-amplifier circuit	* Pre-amplifier defective. * Head wire defective. * Head surface dirty.
		* Mechanism defective. Check for running of tape.
OSCILLATION	Pre-amplifier	* Capacitor (C1, C102 or C202) capacity insufficient or open.
ABNORMAL TAPE SPEED	Electric motor speed regulator circuit	Does not run normally even after semi-potentiometer adjusted. * Replace R31 (560 ohm) with 470 ohm
		Motor runs very fast like fast forward. * Transistor (Q10 or Q11) defective. * Diode (D7 or D8) defective.
		Motor runs but stops after several turns. * Transistor (Q11) defective.
WOW AND FLUTTER	Flywheel drive section	* Flywheel, capstan or idler defective. * Reel table defective. * Belt, pinch roller, idler, flywheel or pulley dirty. * Motor defective.
DOES NOT REVERSE (EITHER AUTO OR MANUAL)	A.T.R. circuit	Solenoids do not release. * Transistor (Q1, Q2, Q3, Q4, Q6 or Q9) defective. * Diode (D1 or D2) defective.
		Does not reverse when program selector depressed. * Program selector switch (S4) defective. * Lead from (S4) to (C8) open. * Capacitor (C8) capacity insufficient or open. * Transistor (Q8) defective.
		Solenoids do not operate to reverse when the end of tape comes. * Transistor (Q5, Q6 or Q7) defective. * Capacitor (C4 or C5) short circuit. * Capacitor (C2) open or short circuit. * Lead switch (S2) defective.
REVERSES BUT NOT ORDERLY	A.T.R. circuit	Solenoids operate to reverse before the end of tape comes. * Lead switch (S2) defective. * Capacitor (C3) short circuit. * Transistor (Q5) defective.
PROGRAM INDICATOR LAMPS DO NOT LIGHT UP	Program indicator circuit	* Check power supply. * Slide switch (S1) defective. * Lead from (S1) to (C13) open. * Lamps defective.
DOES NOT RELEASE F.F. OR REW. POSITION TO PLAY	A.T.R. circuit	* Switch (S4) defective. * Transistor (Q9) defective.

EXPLODED VIEW – Mechanism

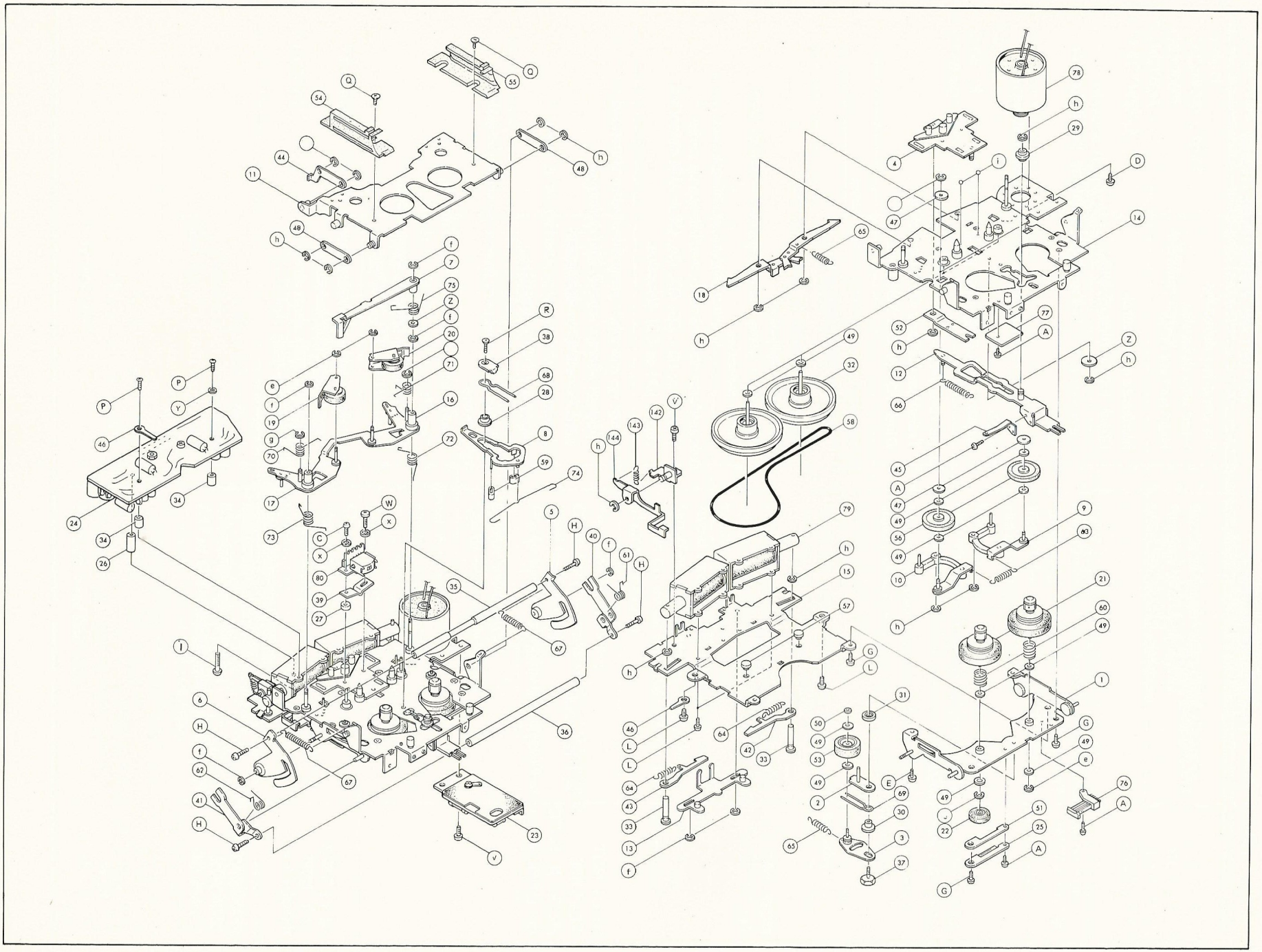

EXPLODED VIEW – Hardwares

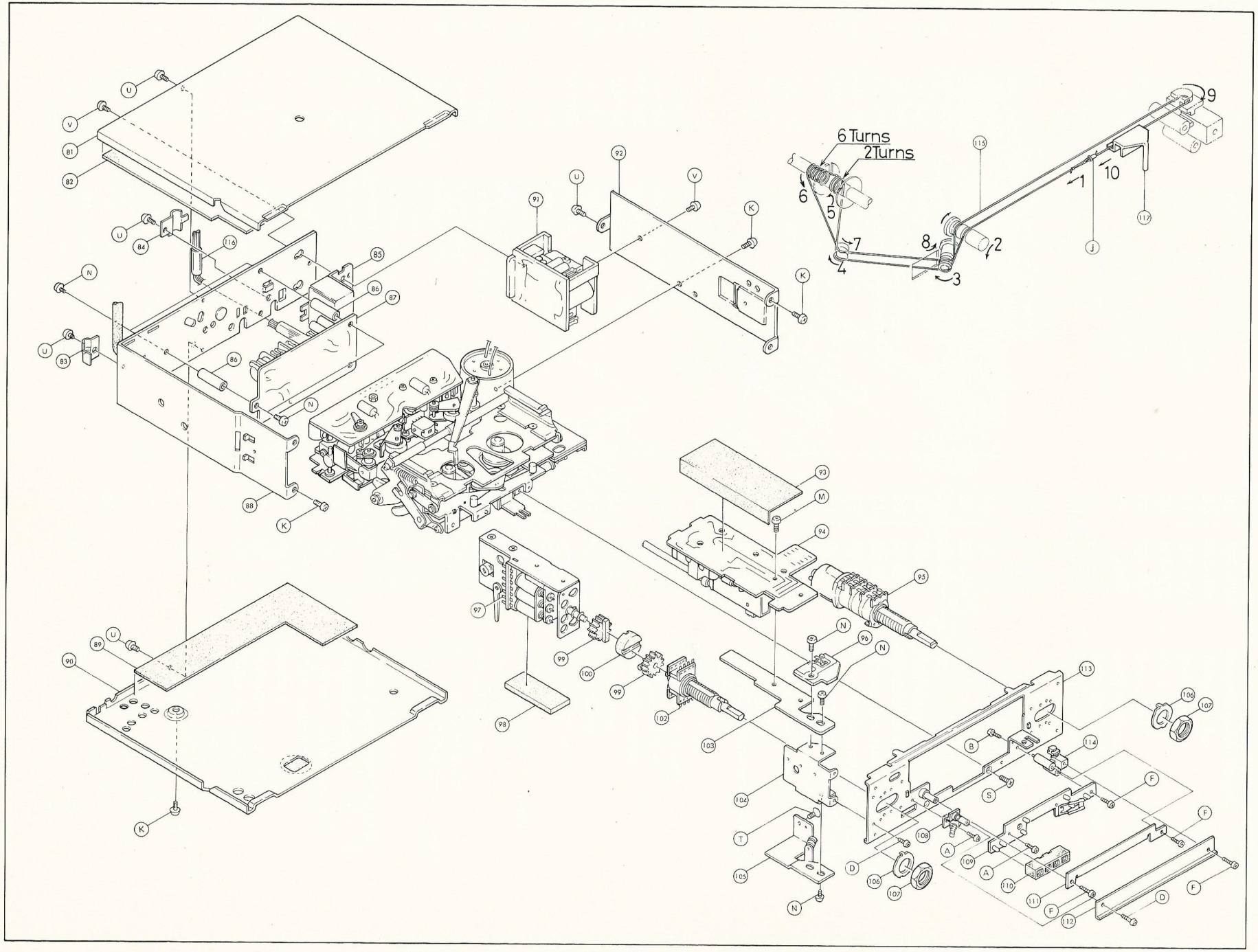

EXPLODED VIEW – Cabinet

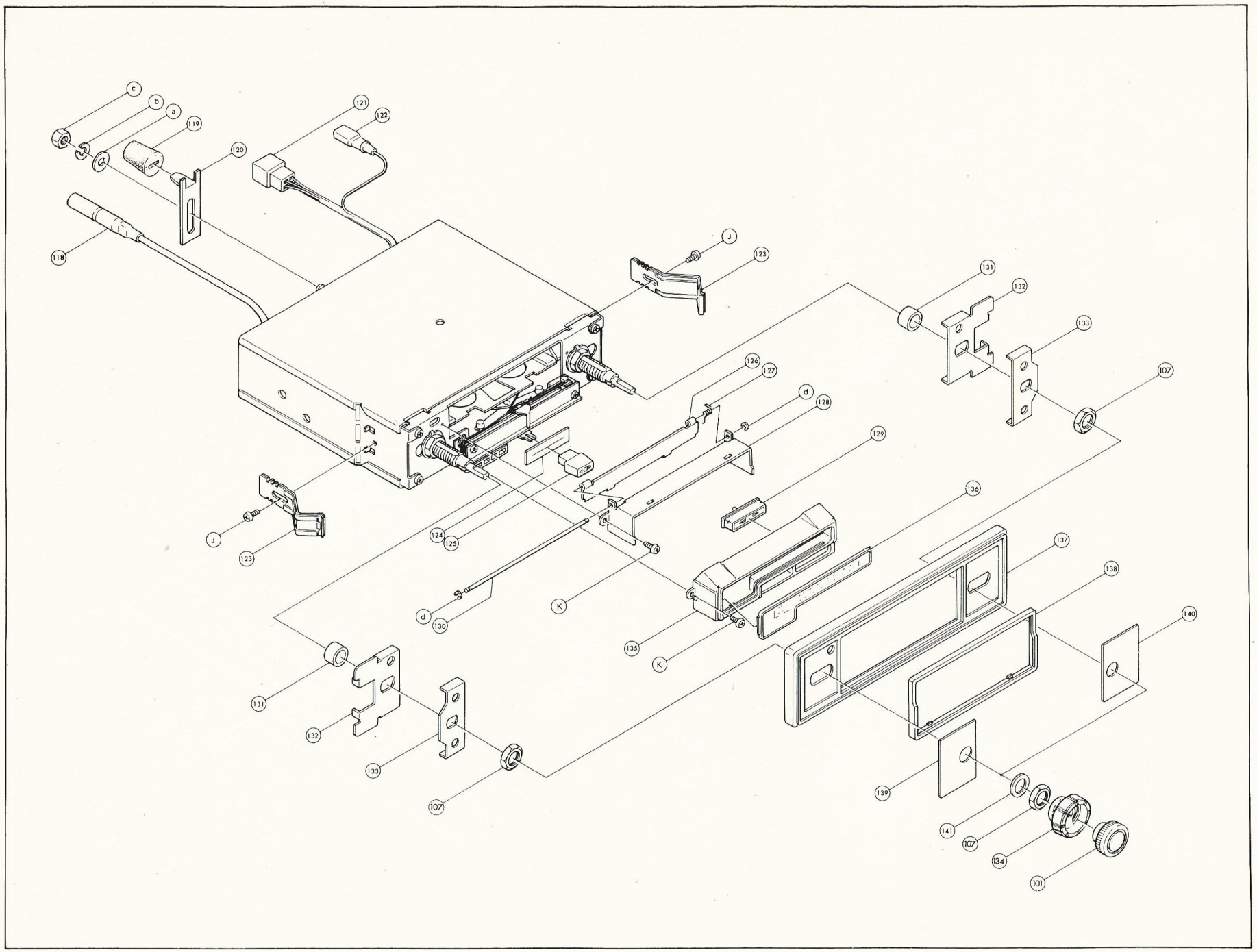

MECHANICAL PARTS LIST

REF. NO.	PART NO.	DESCRIPTION	REF. NO.	PART NO.	DESCRIPTION
1	AA-281	Reel table chassis ass'y	55	MP-1099	Cassette guide (Right)
2	AA-282	Tension arm ass'y (Lower)	56	MC-109	Take-up idler
3	AA-283	Tension arm ass'y (Upper)	57	MP-1121	Bushing
4	AA-284	Cassette head table ass'y	58	MR-182	Rubber belt
5	AA-285	Slot-in arm ass'y (Right)	59	MR-183	Brake pad
6	AA-286	Slot-in arm ass'y (Left)	60	SC-256	Back tension spring
7	AA-312	Cassette eject lever ass'y	61	SC-258	Stop arm spring (Right)
8	AA-288	Brake lever ass'y	62	SC-259	Stop arm spring (Left)
9	AA-303	Idler arm ass'y (Right)	63	SC-263	Idler tension spring
10	AA-304	Idler arm ass'y (Left)	64	SC-267	Catch lever spring
11	AA-290	Cassette tray ass'y	65	SC-142	Lock arm return spring
12	AA-414	Control lever ass'y	66	SC-264	Head return spring
13	AA-292	Switch arm ass'y	67	SC-265	Cassette release spring
14	AA-293	Chassis ass'y	68	SB-55	Restitution spring
15	AA-294	Sub chassis ass'y	69	SB-56	Restitution spring
16	AA-295	Play arm ass'y (Right)	70	SB-57	Pinchroller tension spring (Left)
17	AA-296	Play arm ass'y (Left)	71	SB-58	Pinchroller tension spring (Right)
18	AA-340	Lock arm ass'y	72	SB-59	Play arm return spring (Right)
19	AA-273	Pinch roller ass'y (Left)	73	SB-60	Play arm return spring (Left)
20	AA-274	Pinch roller ass'y (Right)	74	SB-61	Brake tension spring
21	AA-275	Reeltable ass'y	75	SC-266	Cassette eject spring
22	AA-297	Magnet	76	ESS-147	Leaf switch
23	AA-307	Electric motor speed regulator circuit board	77	EP-426	Printed circuit board (Switch)
			78	EMD-58	Motor
24	AA-416	Pre-AMP. & ATR Circuit board	79	AA-330	Solenoid ass'y
25	AA-309	Lead switch circuit board	80	AA-369	Cassette head ass'y
26	CC-798	Sleeve (2.6ø x 4ø)	81	AA-362	Top cover ass'y
27	CC-792	Spacer	82	PN-474	Insulating paper
28	CC-796	Bushing	83	PU-181	Cord clamp
29	CC-797	Roller	84	PL-2086	Cord clamp
30	CC-809	Bushing (2.6ø x 4.2ø)	85	AA-446	Noise filter ass'y
31	CC-810	Spacer (4.3ø x 9ø)	86	CS-424	Stud
32	CC-822	Flywheel	87	AA-316	IF & MPX. circuit board
33	CC-823	Pin (Connecting)	88	AA-413	Side cover ass'y
34	CC-824	Spacer (3.1ø x 5)	89	PN-443	Insulating paper
35	CS-416	Slot-in bar	90	AA-363	Bottom cover ass'y
36	CS-417	Stop bar	91	AA-310	Power amplifier circuit board
37	CS-419	Hexagon bolt	92	PD-265	Side cover
38	PL-1938	Spring holder	93	PN-390	Insulating paper
39	PL-1939	Head table	94	AA-315	Radio tuner circuit board
40	PL-1944	Stop arm (Right)	95	ECRV-177	Potentiometer
41	PL-1945	Stop arm (Left)	96	AA-314	Antenna trimmer ass'y
42	PL-1948	Catch lever (Right)	97	AR-14	Tuner pack (AM, FM)
43	PL-1949	Catch lever (Left)	98	PN-464	Cushion
44	PL-1970	Stopper linkage	99	MP-1078	Oldham's coupling (A)
45	PL-1973	Switch leaf	100	MP-1079	Oldham's coupling (B)
46	PP-432	Lug	101	AA-159	Inner knob ass'y
47	PP-244	Washer (2.1ø x 7ø)	102	ESS-154	Function switch & tuning shaft
48	PP-415	Linkage	103	PP-428	Tuner holder
49	PN-213	Washer (2.1ø x Polyslider)	104	PL-1959	Function lever holder
50	PN-215	Stop ring	105	AA-320	Tuner mounting bracket ass'y
51	PN-445	Insulating paper	106	PL-1922	Dogleg locating washer
52	PD-263	Head stablizer	107	CS-427	Hexagon nut
53	MP-1087	FF. REW. Idler	108	AA-361	Pulley holder ass'y
54	MP-1089	Cassette guide (Left)	109	AA-368	Lamp circuit board

NO.	PART NO.	DESCRIPTION	NO.	PART NO.	DESCRIPTION	
110	MR-193	Lamp cap	A	006204	Screw 2 x 4	
111	PL-2040	Guide plate	B	006205	Screw 2 x 5	
112	HPN-894	Black plate	C	006206	Screw 2 x 6	
113	AA-356	Front chassis ass'y	D	006263	Screw 2.6 x 3	
114	MP-1157	Dial thread holder	E	006264T	Thread forming screw	2.6 x 4
115	XS-69	Dial thread (0.3ø)	F	006265T	Thread forming screw	2.6 x 5
116	WTB-6-30	Vinyl tube	G	006266T	Thread forming screw	2.6 x 6
117	MP-1156	Dial pointer	H	006268T	Thread forming screw	2.6 x 8
118	AH-136	Antenna socket	I	0062617	Screw 2.6 x 17	
119	MR-187	Rubber plug	J	006304	Screw 3 x 4	
120	PL-1982	Rear suspention	K	006304T	Thread forming screw	3 x 4
121	AH-102	4-P Socket set	L	006305T	Thread forming screw	3 x 5
122	AH-133	Auto antenna connection	M	006306S	Screw with spring washer	3 x 6
123	PL-1981	Snap-in spring	N	006306T	Thread forming screw	3 x 6
124	PN-459	Dust cover	O	006308T	Thread forming screw	3 x 8
125	MP-1155	Control button	P	006310	Screw 3 x 10	
126	PL-2010	Door	Q	002233	Flat head screw	2.3 x 3
127	SC-255	Door spring	R	002266	Flat head screw	2.6 x 6
128	PL-2039	Aluminum cover	S	002304	Flat head screw	3 x 4
129	AA-358	Select button ass'y	T	002305	Flat head screw	3 x 5
130	CC-813	Shaft (Door)	U	0863052	Tapping screw	3 x 5
131	MP-1104	Spacer (A)	V	0863062	Tapping screw	3 x 6
132	PL-1979	Snap-in bracket (44mm)	W	091208	Screw 2 x 8	
133	PL-1980	Spacer bracket (52mm)	X	014264	Lock washer	2.6ø
134	AA-360	Outer knob ass'y	Y	014304	Lock washer	3ø
135	AA-357	Nosepiece ass'y	Z	0123028	Flat washer	3ø
136	MP-1150	Dial screen	a	0106508	Flat washer	6ø
137	MP-1147	Trimplate	b	0116115	Spring washer	6ø
138	MP-1149	Nosepiece flange	c	020650	Nut	6ø
139	HPN-914	Inlay plate (Left)	d	030123	E-ring	1.2ø
140	HPN-913	Inlay plate (Right)	e	030154	E-ring	1.5ø
141	PP-425	Flat washer (10ø)	f	030194	E-ring	1.9ø
142	AA-415	Lock-prevention arm holder	g	030204	E-ring	2ø
143	SC-141	Spring	h	030236	E-ring	2.3ø
144	PL-2049	Lock-prevention arm	i	060002	Steel ball	2ø
			j	040230	Grommet	2ø x 3

RADIO TUNER COMPONENT LOCATION GUIDE

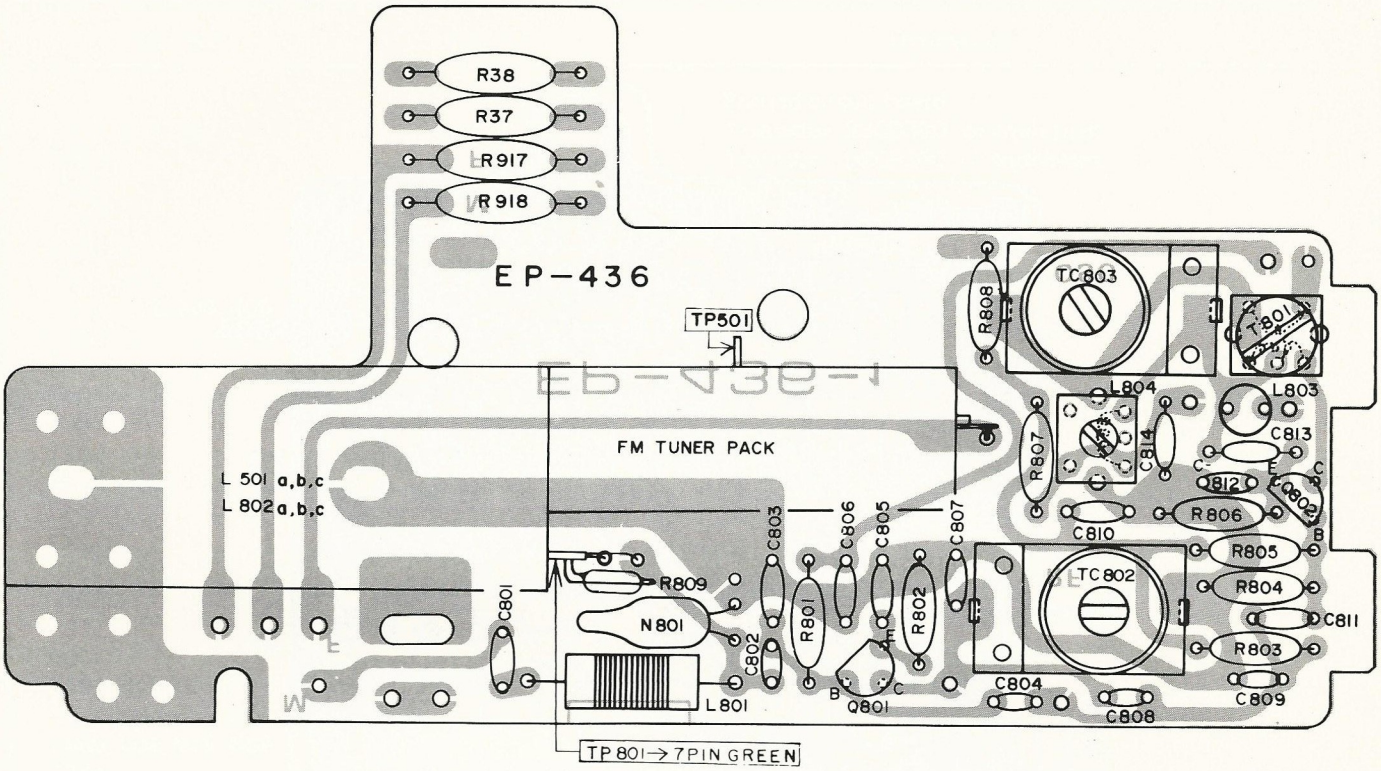

Ref. No. 94 AA-315 Radio tuner circuit board Parts List

Ref. No.	Part No.	Description
	EP-436	Printed circuit board
	PP-428	Tuner holder
	006305	3 x 5 Screw
Q801, 802	ETTC	Transistor 2SC930D or equivalent
L801	ELA-21	Filter choke
L802 a, b, c	AR-14	AM/FM Tuner pak
L501 a, b, c		
L803	ELD-108	AM OSC Coil
L804	ELD-78	AM OSC Coil
T801	ELD-111	AM IFT
T802, 803	ECCT-1	Trimmer capacitor 50pF
N801	EIN-3	Neon tube
C804	ECC	Ceramic capacitor 25pF
C802, 808	ECC	Ceramic capacitor 33pF
C807	ECC	Ceramic capacitor 82pF
C801	ECC	Ceramic capacitor 220pF
C813	ECC	Ceramic capacitor 220pF N470
C803	ECC	Ceramic capacitor 330pF
C805, 806, 810, 811	ECC	Ceramic capacitor 0.022 μF
C809, 812	ECC	Polyester film capacitor 0.0047 μF
C814	ECC	Polyester film capacitor 0.047 μF
R808	ECR	Resistor 1/4W 47 ohm
R37, 38, 917, 918	ECR	Resistor 1/4W 150 ohm
R802	ECR	Resistor 1/4W 330 ohm
R803, 807	ECR	Resistor 1/4W 1K ohm
R806	ECR	Resistor 1/4W 3.3K ohm
R804	ECR	Resistor 1/4W 4.7K ohm
R801	ECR	Resistor 1/4W 22K ohm
R805, 809	ECR	Resistor 1/4W 33K ohm

IF MPX COMPONENT LOCATION GUIDE

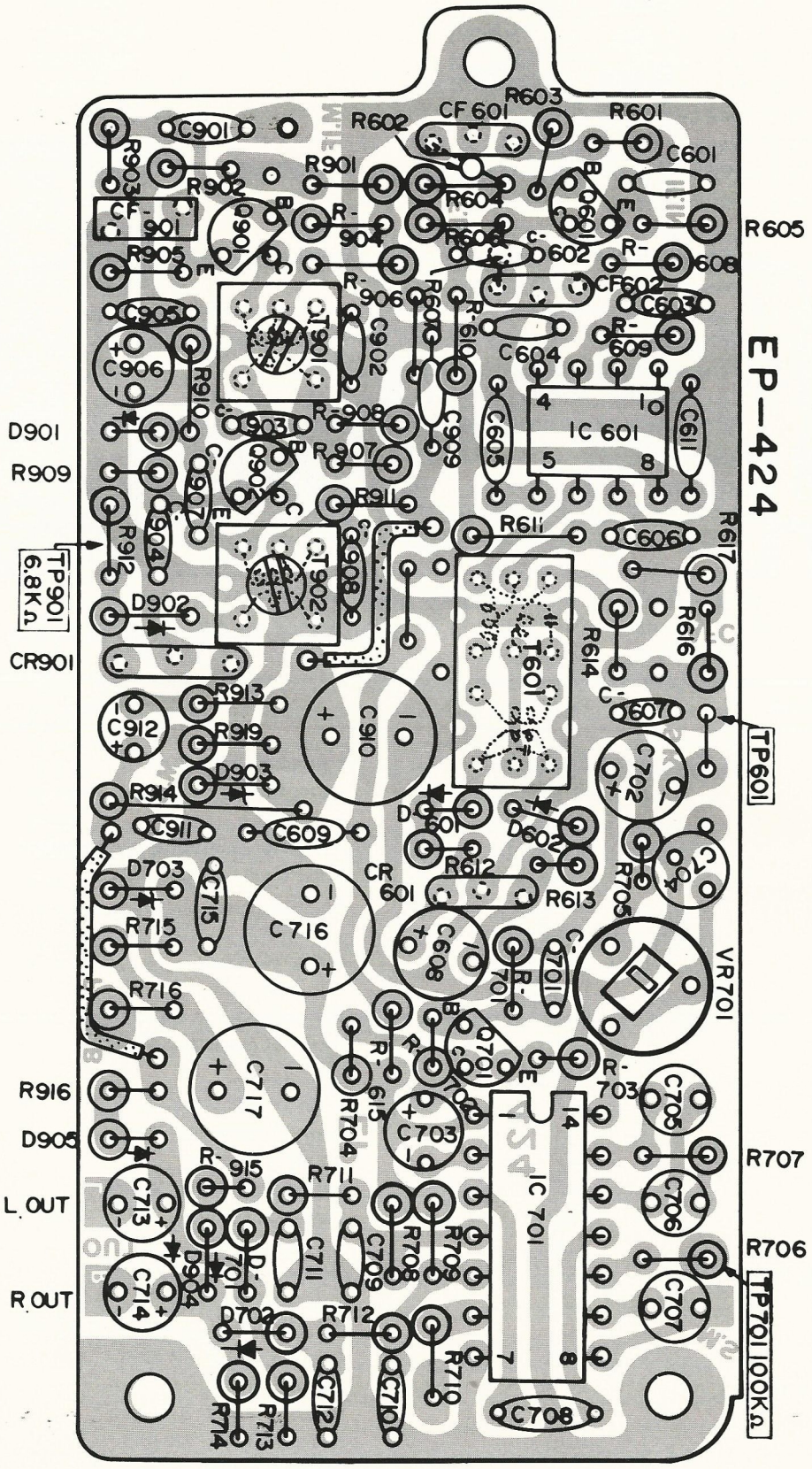

Ref. No. 87 AA-316 IF & MPX. circuit board Parts List

Ref. No.	Part No.	Description
	EP-424	Printed circuit board
Q601, 901, 902	ETTC	Transistor 2SC930D or equivalent
Q701	ETTC	Transistor 2SC536E or equivalent
IC601	ETI-21	IF I.C. LA1111P
IC701	ETI-22	MPX. I.C. HA1156
D601, 602	ETD	Diode 2-1K60 or equivalent
D901, 902	ETD	Diode 1N60 or 2-1K60
D701, 702, 904, 905	ETD	Diode 1S2788 or 1S2787
D703	ETD	Zener diode RD9.1FB or CZ092
D903	ETD	Zener diode HZ7C or equivalent
T601	ELD-107	FM IFT 10.7 MHz
T901	ELD-80	AM IFT 455 kHz
T902	ELD-81	AM IFT 455 kHz
CF601, 602	EOP-6	FM Ceramic filter 10.7 MHz
CF901	EOP-4	AM Ceramic filter 455 kHz
CR601	ECX-1	CR Couplates
CR901	ECX-2	CR Couplates
VR701	ECRV-176	Semi-potentiometer 4.7K ohm
C907	ECC	Ceramic capacitor 68pF
C607	ECC	Ceramic capacitor 100pF
C601, 602, 603, 604, 606, 715, 901, 902,903, 904, 905, 908	ECC	Ceramic capacitor 0.022 μF
C605, 609, 611, 909	ECC	Ceramic capacitor 0.047 μF
C704	ECC	Polystyrene film capacitor 470 pF
C705, 707	ECC	Tantalum electrolytic capacitor 0.33 μF
C706	ECC	Tantalum electrolytic capacitor 0.68 μF
C912	ECC	Tantalum electrolytic capacitor 0.1 μF
C701	ECC	Polyester film capacitor 0.0015 μF
C709, 710, 711, 712	ECC	Polyester film capacitor 0.015 μF
C911	ECC	Polyester film capacitor 0.022 μF
C708	ECC	Polyester film capacitor 0.047 μF
C608, 702, 703, 713, 714, 906	ECC	Electrolytic capacitor 4.7 μF/16V
C717, 910	ECC	Electrolytic capacitor 100 μF/16V
C716	ECC	Electrolytic capacitor 220 μF/16V
R715, 716	ECR	Resistor 1/2W 33 ohm
R710	ECR	Resistor 1/2W 150 ohm
R715, 716	ECR	Resistor 1/4W 33 ohm
R610, 615	ECR	Resistor 1/4W 47 ohm
R611, 614, 906, 911	ECR	Resistor 1/4W 100 ohm
R608	ECR	Resistor 1/4W 220 ohm
R601, 609, 619	ECR	Resistor 1/4W 330 ohm
R605, 606, 902	ECR	Resistor 1/4W 470 ohm
R612, 613, 703, 707, 711, 712, 909, 915, 916	ECR	Resistor 1/4W 1K ohm
R905	ECR	Resistor 1/4W 2.2K ohm
R704, 708, 709	ECR	Resistor 1/4W 3.3K ohm
R603, 701, 907, 912	ECR	Resistor 1/4W 4.7K ohm
R910	ECR	Resistor 1/4W 6.8K ohm
R705	ECR	Resistor 1/4W 16K ohm
R604, 908, 914	ECR	Resistor 1/4W 22K ohm
R903	ECR	Resistor 1/4W 47K ohm
R713, 714, 901	ECR	Resistor 1/4W 68K ohm
R706	ECR	Resistor 1/4W 100K ohm
R702, 617	ECR	Resistor 1/4W 150K ohm
R913	ECR	Resistor 1/4W 220K ohm
R616	ECR	Resistor 1/4W 470K ohm
R904	ECR	Resistor 1/4W 1M ohm
R602, 607	ECR	Resistor 1/16W 470 ohm

POWER AMPLIFIER COMPONENT LOCATION GUIDE

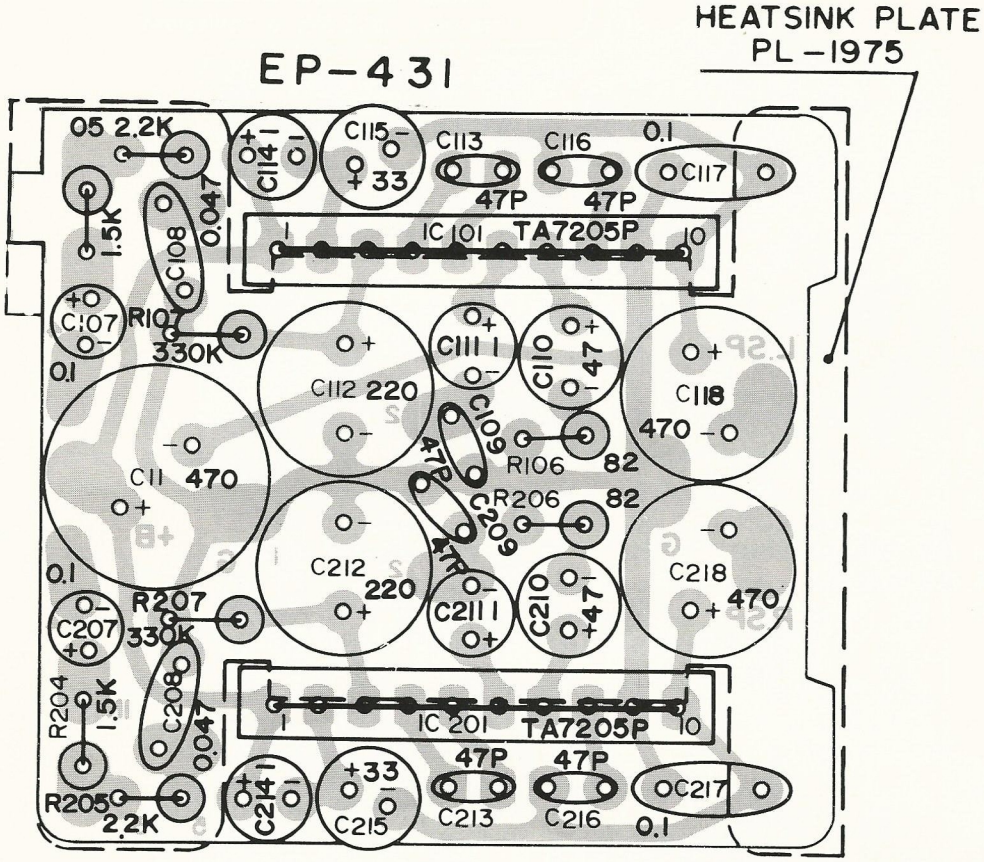

Ref. No. 91 AA-310 **Power amplifier circuit board Parts List**

Ref. No.	Part No.	Description
	EP-431	Printed circuit board
	PL-1975	Heatsink plate
	0863062	3 x 6 Tapping screw
IC101, 201	ETI-23	I.C. TA7205P
C11	ECC	Electrolytic capacitor 470 μF/16V
C118, 218	ECC	Electrolytic capacitor 470 μF/10V
C112, 212	ECC	Electrolytic capacitor 220 μF/6.3V
C110, 210	ECC	Electrolytic capacitor 47 μF/6.3V
C115, 215	ECC	Electrolytic capacitor 33 μF/10V
C111, 114, 211, 214	ECC	Electrolytic capacitor 1 μF/16V
C107, 207	ECC	Tantalum electrolytic capacitor 0.1 μF/16V
C117, 217	ECC	Polyester film capacitor 0.1 μF
C108, 208	ECC	Polyester film capacitor 0.047 μF
C109, 116, 209, 216, 113, 213	ECC	Ceramic capacitor 47pF
R106, 206	ECR	Resistor 1/4W 82 ohm
R104, 204	ECR	Resistor 1/4W 1.5K ohm
R105, 205	ECR	Resistor 1/4W 2.2K ohm
R107, 207	ECR	Resistor 1/4W 330K ohm

PRE-AMPLIFIER AND A.T.R. COMPONENT LOCATION GUIDE

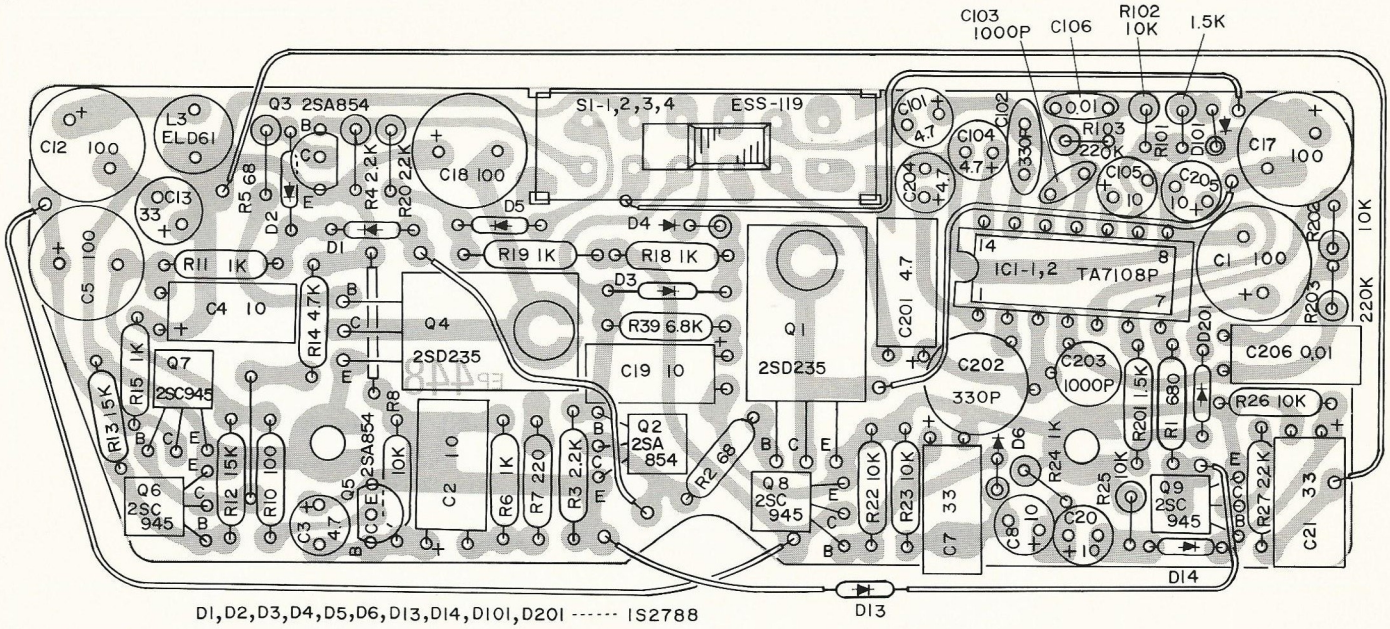

Ref. No. 24 AA-416 Pre-AMP. & ATR circuit board Parts List

Ref. No.	Part No.	Description
	EP-448	Printed circuit board
	006305	3 x 5 Screw
	0203020	3ø Nut
IC1-1, 2	ETI-13	I.C. TA7108P
Q1, 4	ETTD	Transistor 2SD235 (O or Y)
Q2, 3, 5	ETTA	Transistor 2SA854 or equivalent
Q6, 7, 8, 9	ETTC	Transistor 2SC945 or equivalent
D1, 2, 3, 4, 5, 6, 13, 14, 101, 201	ETD	Diode 1S2788 or 1S2787
S1-1, 2, 3, 4	ESS-119	Slide switch
L3	ELD-61	Inductor 1 mH
C1, 5, 12, 17, 18	ECC	Electrolytic capacitor 100 μF/16V
C13	ECC	Electrolytic capacitor 33 μF/16V
C7, 21	ECC	Electrolytic capacitor 33 μF/10V
C2, 4, 8, 19, 20, 105, 205	ECC	Electrolytic capacitor 10 μF/16V
C3, 101, 104, 201, 204	ECC	Electrolytic capacitor 4.7 μF/16V
C106, 206	ECC	Polyester film capacitor 0.01 μF
C103, 203	ECC	Ceramic capacitor 1000pF
C102, 202	ECC	Ceramic capacitor 330pF
R2, 5	ECR	Resistor 1/4W 68 ohm
R10	ECR	Resistor 1/4W 100 ohm
R7	ECR	Resistor 1/4W 220 ohm
R1	ECR	Resistor 1/4W 680 ohm
R6, 11, 15, 18, 19, 24	ECR	Resistor 1/4W 1K ohm
R101, 201	ECR	Resistor 1/4W 1.5K ohm
R3, 4, 20, 27	ECR	Resistor 1/4W 2.2K ohm
R14	ECR	Resistor 1/4W 4.7K ohm
R39	ECR	Resistor 1/4W 6.8K ohm
R8, 22, 23, 25, 26, 102, 202	ECR	Resistor 1/4W 10K ohm
R12, 13	ECR	Resistor 1/4W 15K ohm
R103, 203	ECR	Resistor 1/4W 220K ohm

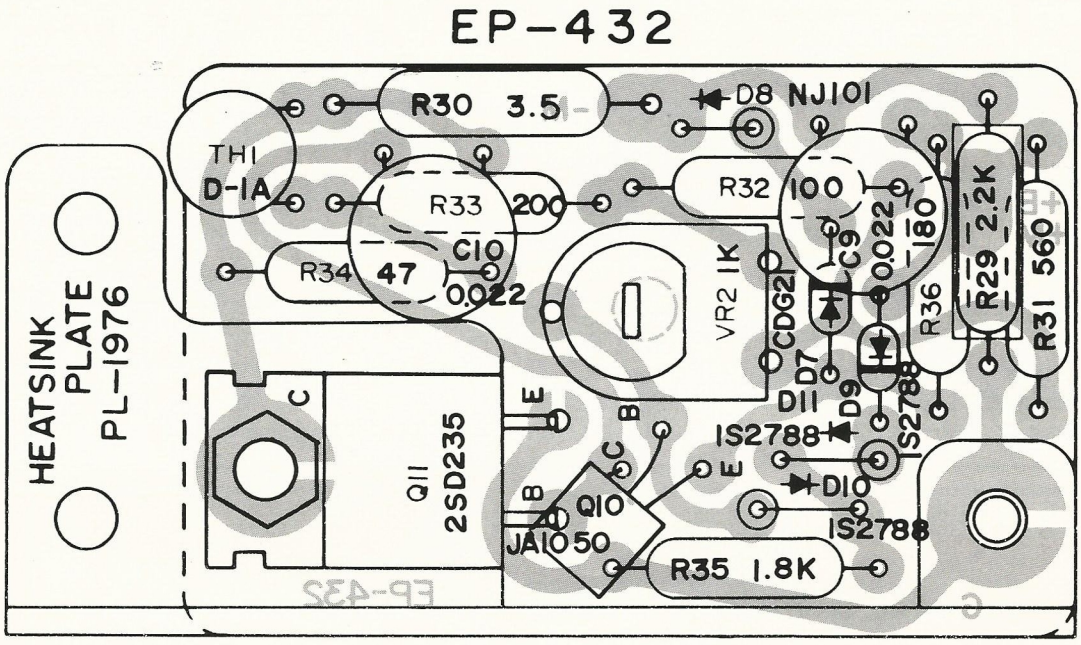

Ref. No. 23 AA-307 **Electric motor speed regulator circuit board Parts List**

Ref. No.	Part No.	Description
	EP-432	Printed circuit board
	PL-1976	Heatsink plate
	PN-444	Insulating paper
	PP-35	Lug
	MP-935	Spacer
	0863062	3 x 6 Tapping screw
	006308	3 x 8 Screw
	0203020	3ø Nut
Q10	ETTA	Transistor JA1050 or equivalent
Q11	ETTD	Transistor 2SD235
D7, 8	ETD	Diode CDG21 or equivalent
D9, 10, 11	ETD	Diode 1S2788 or 1S2787
TH1	ETS	Thermistor D1A
VR2	ECRV-135	Semi potentiometer 1K ohm
C9, 10	ECC	Ceramic capacitor 0.022 μF
R29	ECR	Resistor 1/4W 2.2K ohm
R35	ECR	Resistor 1/4W 1.8K ohm
R31	ECR	Resistor 1/4W 560 ohm
R33	ECR	Resistor 1/4W 200 ohm
R36	ECR	Resistor 1/4W 180 ohm
R32	ECR	Resistor 1/4W 100 ohm
R34	ECR	Resistor 1/4W 47 ohm
R30	ECR	Resistor 1W 3.5 ohm

Ref. No. 109 AA-368 Lamp circuit board Parts List

Ref. No.	Part No.	Description
	EP-447	Printed circuit board
PL1, 2, 3, 4, 5, 6, 7	EIL-38	Pilot lamp
R21	ECR	Resistor 1/2W 150 ohm
S4	PL-2042	Channel switch
	050123	1.2ϕ Rivet

Ref. No. 80 AA-369 Cassette head ass'y Parts List

Ref. No.	Part No.	Description
	AHP-2	Playback head
	EP-451	Printed circuit board

Ref. No. 96 AA-314 Antenna trimmer ass'y Parts List

Ref. No.	Part No.	Description
TC801	ECCV-14	Trimmer capacitor
	PL-1978	Trimmer protector
	EP-425	Printed circuit board

Ref. No. 25 AA-309 Lead switch circuit board Parts List

Ref. No.	Part No.	Description
S2	ESS-148	Lead switch
	EP-433	Printed circuit board

Ref. No. 85 AA-446 Noise filter ass'y Parts List

Ref. No.	Part No.	Description
	PL-2073	Shield case
	PL-2074	Noise filter case
	EP-459	Printed circuit board
C14, 16, 119, 219	ECC	Feed through ceramic capacitor 3000pF
C15	ECC	Electrolytic capacitor 470 μF/16V
D12	ETD	Diode DS130Y
L4	ELS-94	Choke transformer

WIRING DIAGRAM

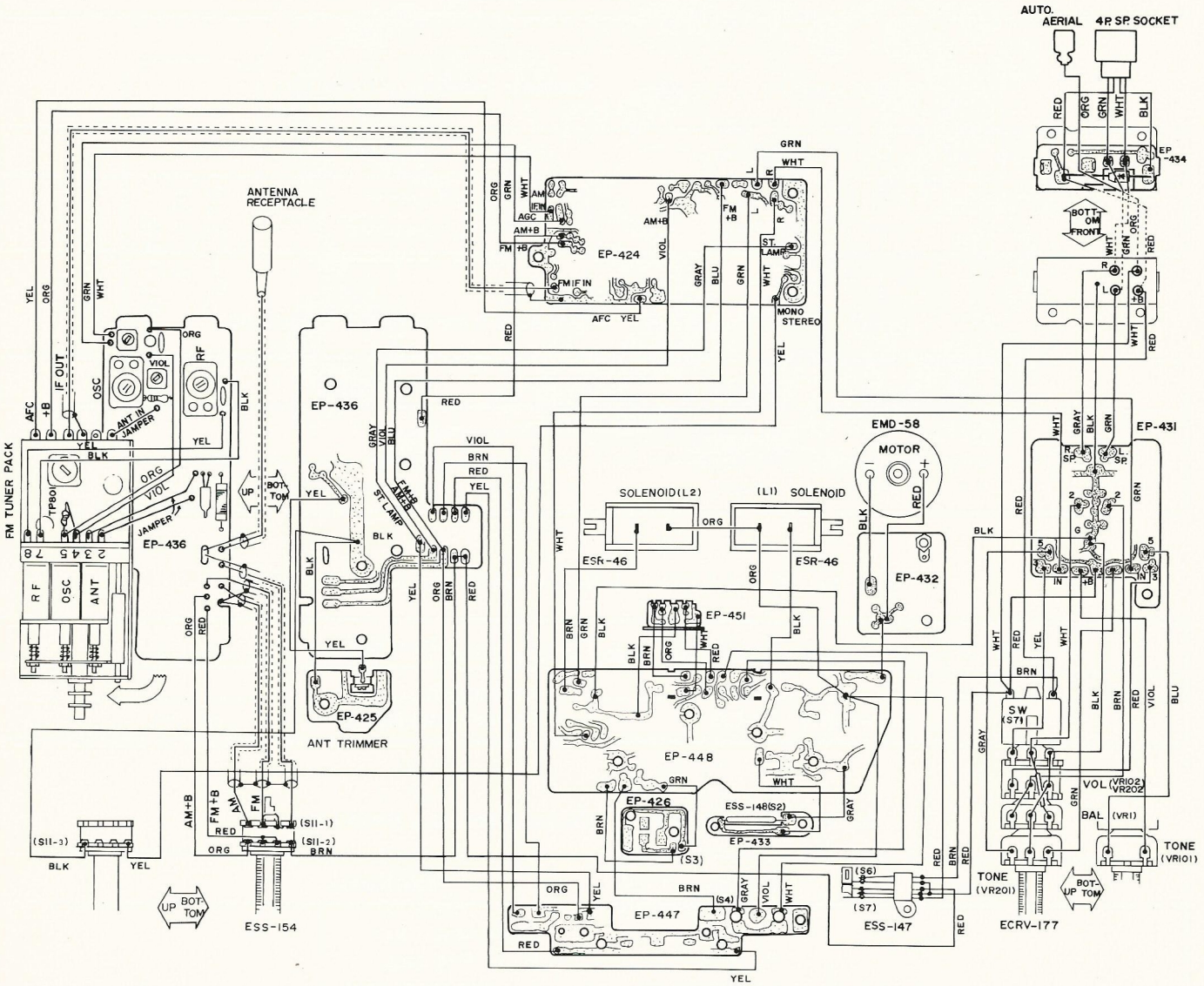

NOTE: 1. BRN-BROWN RED-RED ORG-ORANGE YEL-YELLOW GRN-GREEN
BLU-BLUE VIOL-VIOLET GRAY-GRAY WHT-WHITE BLK-BLACK

RADIO AND AUDIO AMP VOLTAGES

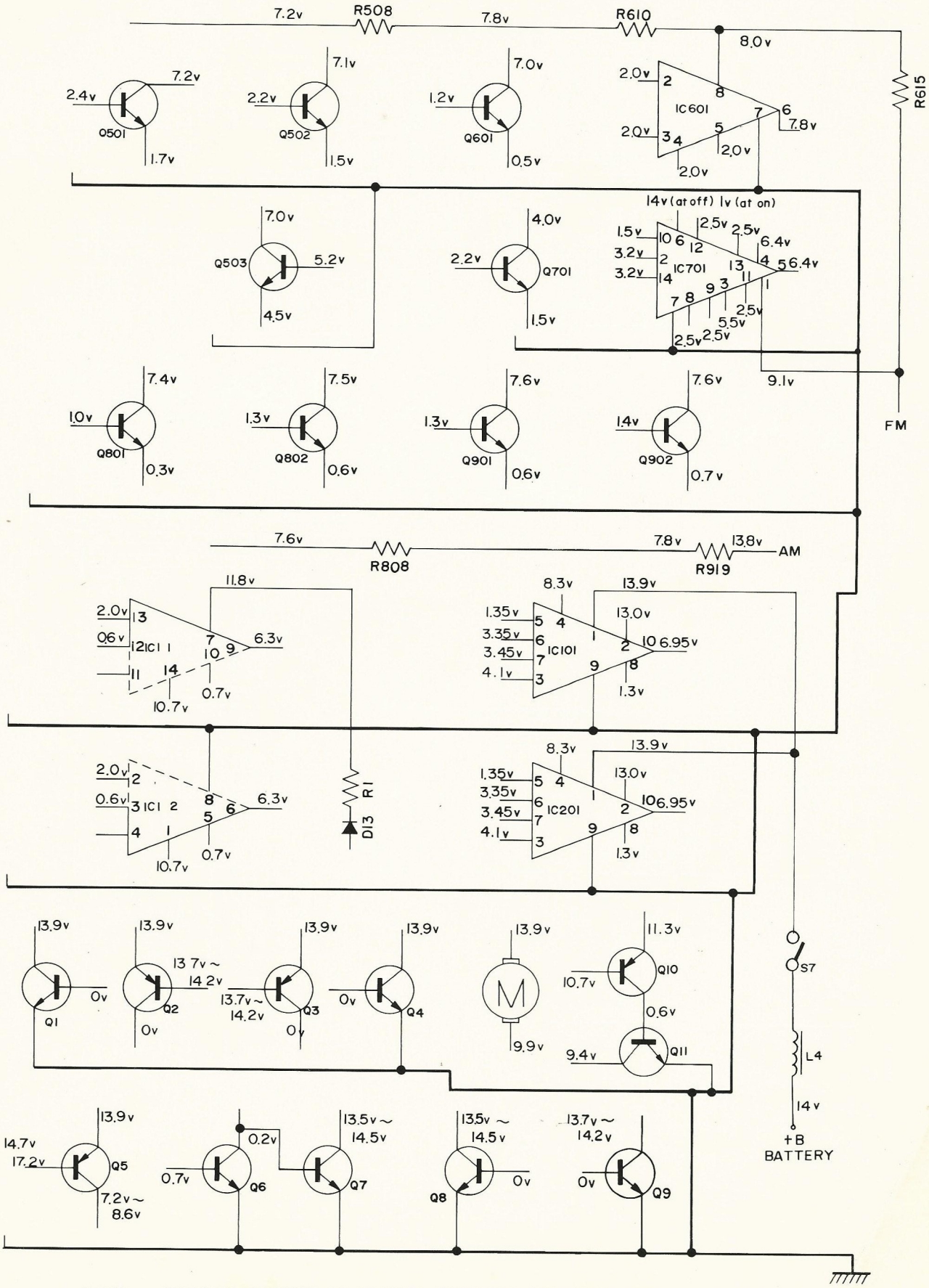

NOTE VOLTAGE READINGS TO COMMON GROUND(−) ARE MEASURED WITH DC VTVM AT NO SIGNAL.

SCHEMATIC DIAGRAM

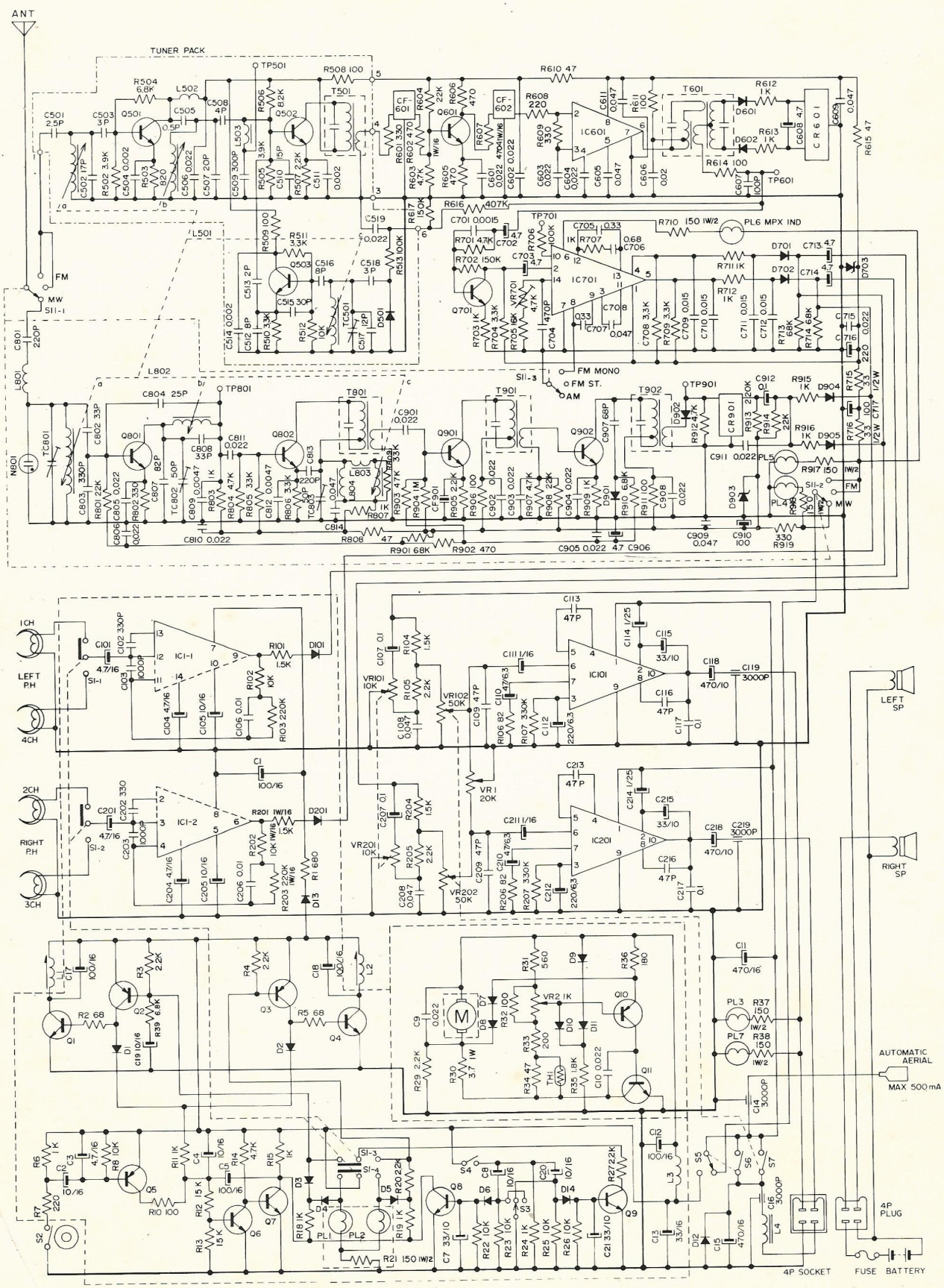

1. ALL RESISTANCES ARE 5% 1W/4 UNLESS OTHERWISE NOTED VALUES ARE IN OHMS. K=1000, M=1000K
2. ALL CAPACITANCES VALUE ARE IN MICROFARAD. P=MICRO MICRO FARAD
3. ELECTROLYTIC CAPACITANCES NAGATIVE END SHOWN E.
4. S11-1, S11-2, S11-3, ------ ESS-154
   S5, S6 ------ ESS-147
   S7, VR1, VR101, VR102, VR202 ------ ECRV-177

Printed in Japan