HOLDEN

SERVICE MANUAL

AUTOREVERSE CASSETTE STEREO PLAYER
& ELECTRONIC SEEK TUNE AM / FM STEREO RADIO
with 12 Programmable Memories & Digital Display

MCC-6630V/I

Printed in Japan Oct. '89 Modification Reserved

LOCATION OF CONTROLS

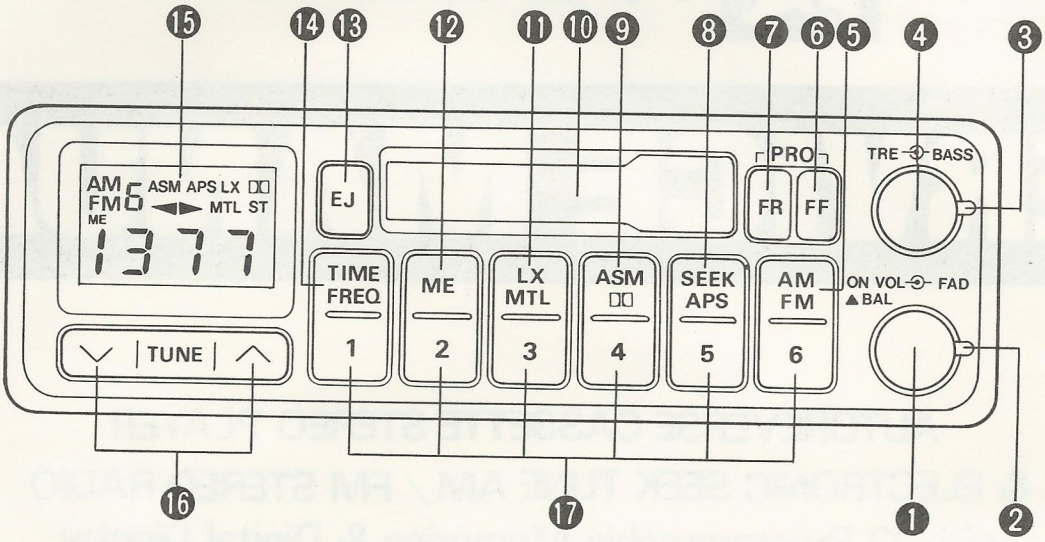

1. Power On-Off Switch/Volume Control
   Balance Control — Pull (BAL)
2. Fader Control
3. Bass Control
4. Treble Control (TRE)
5. AM/FM Waveband Selector Switch
6. Fast Forward Button (FF)
7. Fast Rewind Button (FR)
8. Automatic Seek Tuning Switch
   Automatic Program Selector Switch (APS)
9. Automatic Station Store Memory Switch (ASM)
   Dolby Noise Reduction Switch *
10. Cassette door
11. Local/Distant Selector Switch (LX)
    Metal Tape Selector (MTL)
12. Memory Enable Switch (ME)
13. Manual Cassette Eject Button (EJ)
14. Time/Frequency Selector Switch
15. LCD Display
16. Manual Tuning Switch
17. Memory Address Switches

* mark ..... Noise reduction manufactured under license from Dolby Laboratories Licensing Corporation.
"Dolby" and the double-D symbol are trademarks of Dolby Laboratories Licensing Corporation.

GENERAL INFORMATION

SEMICONDUCTORS: 11 ICs, 2 FETs, 37 Transistors, 39 Diodes, 1 LCD

DESCRIPTION	REF. NO.	Q'TY	EQUIVALENT
(AM Radio)			
AM IC LA1135	V704	1	
RF amplifier FET 2SK427(T)	V702	1	
RF AGC transistor 2SC2814(F3)	V703	1	
RF AGC transistor 2SC2812(L6)	V701	1	
Varactor diode SVC321SPA	D701, 702, 703	3	
(FM radio)			
IF IC LA1140	V623	1	
NB IC LA2110	V627	1	
MPX IC LA3370	V628	1	
RF amplifier FET 3SK101(GR)	V601	1	
Mixer transistor 2SC2620(B)	V602	1	2SC2714(O)
Oscillator transistor 2SC2995(O)	V603	1	
OSC buffer amplifier transistor 2SC2715(O)	V604	1	
LF amplifier transistor 2SC930(D)	V622	1	
Switching transistor 2SC2603(F)	V624	1	2SC2603(E)
Switching transistor DTC124ES	V621, 626	2	2SC3400
Switching transistor DTC114YS	V625	1	2SC4048
Varactor diode 1SV103	D601, 602, 603	3	
Voltage shift diode MA165	D622, 623	2	
Switching diode MA165	D621, 624, 625, 750, 751, 752	6	
(Pre amplifier)			
Pre amplifier IC LA3161	V101	1	
Switching transistor DTC124ES	V102	1	2SC3400
Switching diode MA165	D101, 201	2	
(APS)			
APS IC M51143AL	V2	1	
Switching transistor 2SD973(R)	V3	1	2SC2673(Q)
Switching transistor DTC124ES	V4, 5, 6	3	2SC3400
Switching transistor DTC114TS	V103, 104	2	2SC3860
Arc suppressor diode ERA15-02	D4	1	
(MTL)			
Switching transistor DTC144ES	V105, 106	2	2SC3399
(Power amplifier)			
Power amplifier IC LA4445	V141, 341	2	
Switching diode MA165	D141, 341	2	
(Dolby)			
Dolby IC HA12136	V401	1	
(Control)			
PLL IC μPD1708AG-715	V901	1	
Switching transistor 2SC2603(F)	V902, 903	2	2SC2603(E)
Switching transistor DTC124ES	V914	1	2SC3400
Switching transistor 2SA1115(F)	V904, 905	2	2SC1115(E)
Switching transistor 2SC2021(R)	V909, 910, 911, 912	4	2SC2021(Q)
Low pass filter transistor 2SC2458L(BL)	V906, 907	2	
Switching diode MA165	D901, 902, 903, 904, 905, 906, 907, 908, 909, 910, 911, 912, 911, 912, 913, 914	14	
(Muting)			
Muting transistor DTA124ES	V301	1	2SA1346
Muting transistor 2SC2603(F)	V302, 303	2	2SC2603(E)
Muting diode MA165	V301, 302	2	
(Regulator)			
Regulator IC AN8005	V1	1	
Regulator transistor 2SD973(R)	V681	1	2SD973(S)
Switching transistor DTB123YS	V682	1	2SA1524
Switching transistor DTA114TS	V683	1	2SA1497
Switching transistor 2SC2603(F)	V684	1	2SC2603(E)
Voltage shift diode MA165	D2	1	
Zener diode HZS10N(B1)	D3, 681	2	RD10E(B1)
Protector diode ERB12-02	D1	1	DS135(D)
(Display)			
LCD Display	LCD1	1	

INPUT AND OUTPUT

Indication	For Connection of:	Sensitivity	Impedance	Type of Socket	Connections
Antenna receptacle	Car radio aerial	1μV-3V	75 ohm		Aerial
13P plug	Output Speaker Left CH and Right CH	1-2. 7.5W 3-4. 7.5W 5-6. 7.5W 7-8. 7.5W	4 ohm		1. Front Left Speaker (+) 2. Front Left Speaker (−) 3. Front Right Speaker (+) 4. Front Right Speaker (−) 5. Rear Left Speaker (+) 6. Rear Left Speaker (−) 7. Rear Right Speaker (+) 8. Rear Right Speaker (−) 13. Ground
	Small light switch	–	–		9. Back light
	Power supply +14V (Ignition switch)	–	–		12. +14V DC
	Power supply +14V (Car battery)	–	–		10. Car battery +14V DC
	Automatic aerial	14V DC (Max. 500mA)	–		11. Automatic aerial

CIRCUIT FUNCTION DIAGRAM

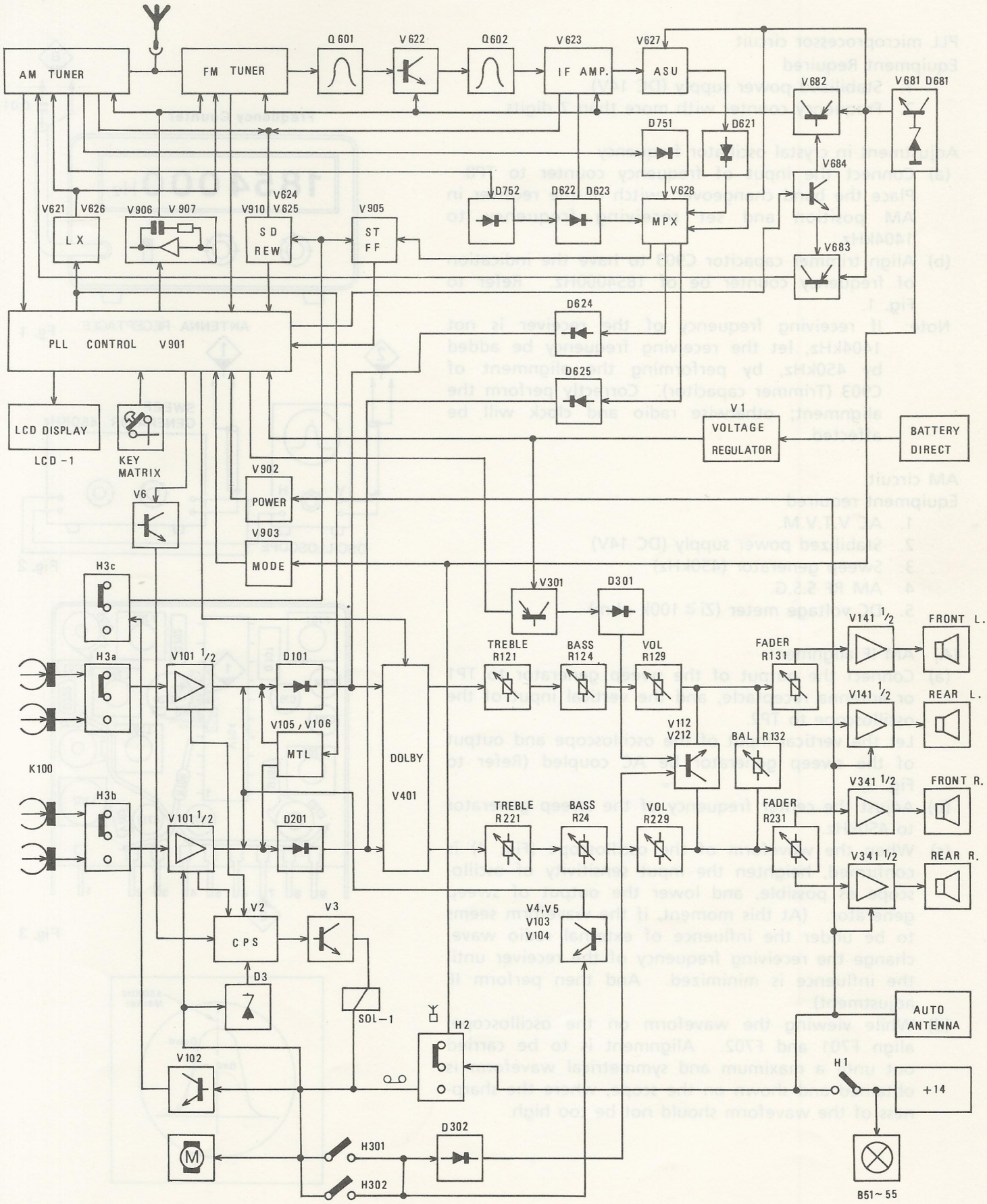

SERVICE ALIGNMENT PROCEDURE

PLL microprocessor circuit

Equipment Required

1. Stabilized power supply (DC 14V)
2. Frequency counter with more than 7 digits

Adjustment in crystal oscillator frequency

(a) Connect the input of frequency counter to TP8. Place the band changeover switch of the receiver in AM position and set receiving frequency to 1404kHz.

(b) Align trimmer capacitor C903 to have the indication of frequency counter be of 1854000Hz. Refer to Fig. 1.

Note: If receiving frequency of the receiver is not 1404kHz, let the receiving frequency be added by 450kHz, by performing the alignment of C903 (Trimmer capacitor). Correctly perform the alignment; otherwise radio and clock will be affected.

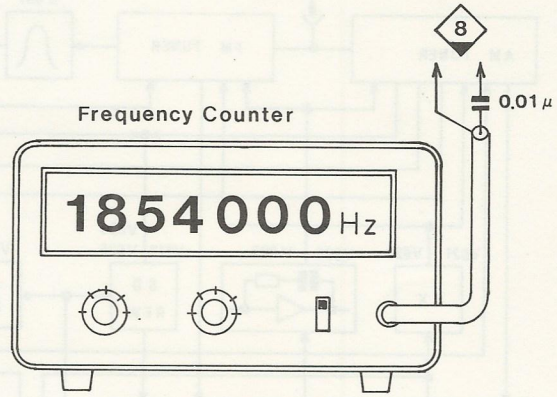

Fg. 1

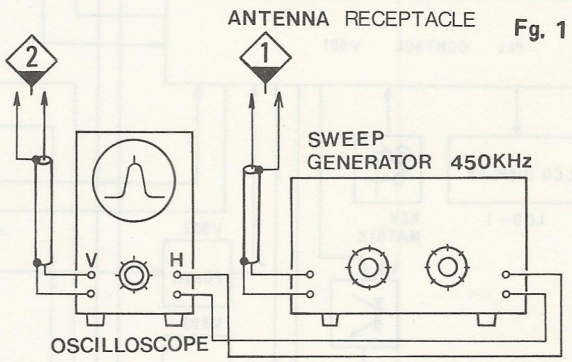

Fig. 2

AM circuit

Equipment required

1. AC V.T.V.M.
2. Stabilized power supply (DC 14V)
3. Sweep generator (450kHz)
4. AM RF S.S.G.
5. DC voltage meter (Zi ≧ 100k ohm)

(A) AM IF alignment

(a) Connect the output of the sweep generator to TP1 or antenna receptacle, and the vertical input of the oscilloscope to TP2.
Let the vertical input of the oscilloscope and output of the sweep generator be AC coupled (Refer to Fig. 3).

(b) Adjust the center frequency of the sweep generator to 450kHz.

(c) When the waveform of the oscilloscope (Fig. 4) is confirmed, heighten the input sensitivity of oscilloscope as possible, and lower the output of sweep generator. (At this moment, if the waveform seems to be under the influence of external radio wave, change the receiving frequency of the receiver until the influence is minimized. And then perform IF adjustment).

(d) While viewing the waveform on the oscilloscope, align F701 and F702. Alignment is to be carried out until a maximum and symmetrical waveform is obtained and shown on the scope, where the sharpness of the waveform should not be too high.

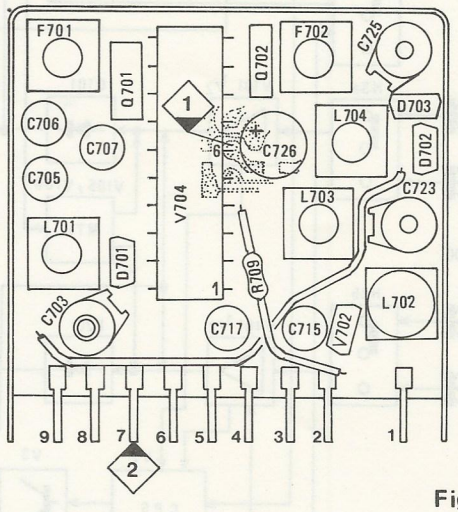

Fig. 3

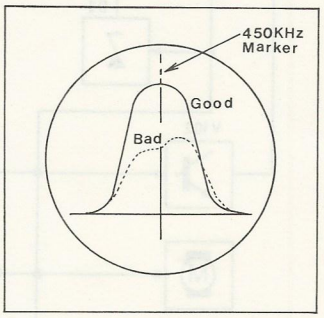

Fig. 4

(B) AM RF (Tracking) alignment

(a) Connect the V.T.V.M. to the speaker output of either channel, and the output of AM RF S.S.G. to the antenna through dummy antenna (Fig. 5).

(b) Tuning voltage calibration
Connect DC voltage meter to 9 pin of AM board.
Read the indications of DC voltage meter at the lower limit (522kHz) and upper limit (1629kHz).
Confirm that the voltage values (lower limit and upper limit) are approximately 1.5V and 7V, respectively. If the values obtained are greatly deviated from the standard ones, adjust L701 and C703.

(c) Set the frequency of S.G. to 603kHz exactly. Let the output level be the level of AGC being not working (less than 30μV).

(d) Align L703 (ANT coil) and L704 (RF coil) to obtain the maximum output. At this moment, the core positions of L703 and L704 should be memorized.

(e) Set the frequency of S.G. to 1404kHz, and the tuning of the receiver to 1404kHz also. Move C723 and C725 to observe the direction in which the output becomes great.

(f) Repeat the above mentioned procedure several times. (Ensure that quieting sensitivity is within the specification).

Note:

1. If L703 and L704 are shifted slightly, align L704 to obtain the maximum sensitivity. And at this moment, ensure that the upper limit and lower limit of tuning voltage should be in the range of 1V-8.5V.
2. Since D701, D702 and D703 are used as a single set, these three components should be replaced at the same time even if only one of the three is defective.

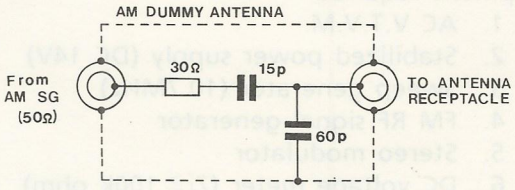

Fig. 5

(C) AM stop signal circuit alignment

Note: In the case of AM, confirmation is made by only performing the alignment of IF and RF.

(a) Connect the output of AM RF signal generator to the antenna, set the frequency of signal generator to 999kHz exactly, perform auto search, change the output level of signal generator, and then confirm whether search stop is conducted correctly or not.

FM circuit

Equipment required

1. AC V.T.V.M.
2. Stabilized power supply (DC 14V)
3. Sweep generator (10.7MHz)
4. FM RF signal generator
5. Stereo modulator
6. DC voltage meter (Zi ≧ 100k ohm)

(A) FM IF alignment

(a) Connect the output of sweep generator to the antenna, and the vertical input of oscilloscope to the TP6. (Refer to Fig. 6)

(b) Set the center frequency of sweep generator to 10.7MHz.

Note: Heighten the input sensitivity of oscilloscope as much as possible. The output level of sweep generator should be set at the level at which the limiter of IF amplifier can not be working.

(c) Align F601 in order that the waveform of the oscilloscope may be the same as that shown in Fig. 7. The amplitude of the waveform should be maximum and symmetrical with respect to the vertical axis, and the end portion should be round shaped.

(d) Place C.R circuit in Fig. 8 to the vertical input of oscilloscope, and connect the input to TP6. At this moment, the input sensitivity of oscilloscope is lower than that in procedure (b), and the output level of sweep generator will lower further.

(e) Align F621 to have the waveform shown on the oscilloscope be the same as that shown in Fig. 9.

(f) Connect the output of FM RF signal generator to the antenna through dummy antenna. Set the frequency of FM RF sweep generator to 98.1MHz exactly, and tune the receiver to 98.1MHz as well. Let the output level of FM RF sweep generator be 1mv. Refer to Fig. 10.

(g) Connect DC voltage meter to TP3 and TP4. The voltage range of the meter should be set lower than 0.5V and then align F621 until the indication of voltage meter is at 0V.

(B) FM RF board alignment

(a) Connect FM RF S.G. to the antenna of the receiver through dummy antenna, and AC V.T.V.M. to the speaker output of either channel.

(b) Set the output level of FM RF signal generator to 3μV, and modulation to 1kHz deviation (30%). Adjust VOL of the receiver to the adequate position in accordance with indication of AC V.T.V.M.

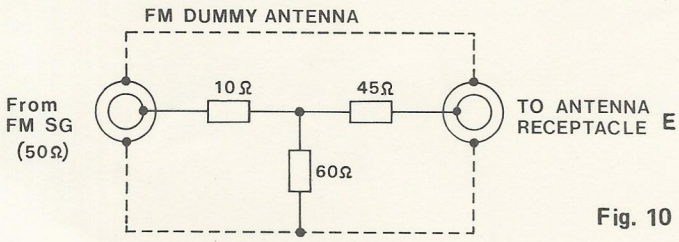

Fig. 10

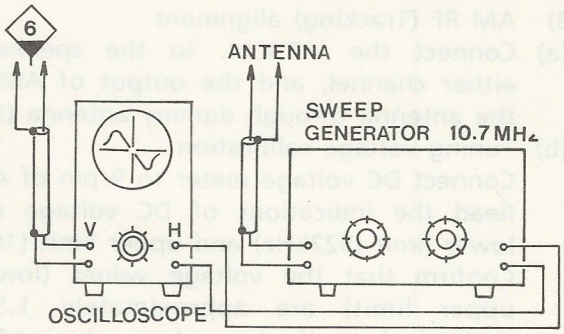

Fig. 6

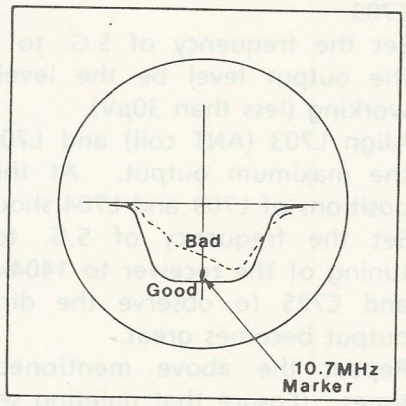

Fig. 7

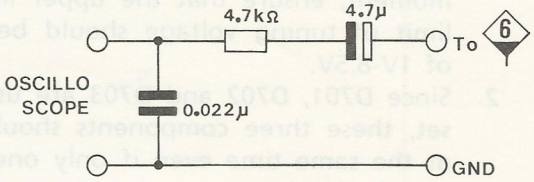

Fig. 8

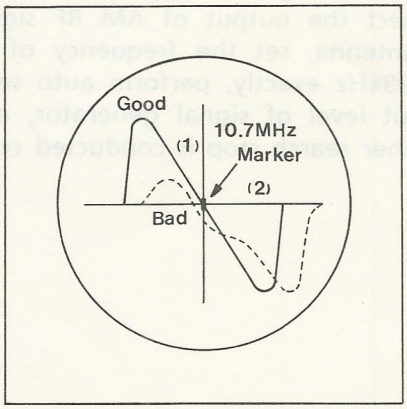

Fig. 9

(c) Tuning voltage calibration
Connect DC voltage meter to terminal No.4 of FM RF. Set the tuning of the receiver to 87.5MHz. Record the reading of DC voltage meter, then change the tuning of the receiver to 108.0MHz and in turn record the reading of DC voltage meter Confirm that the two voltage values are to be approximately 1.5V and 7V, respectively. If the values indicated are greatly deviated from the standard ones, adjust L605 and C617.

Note: Since 1.2V and 9V are the allowably extreme values, reconfirmation must be made should L605 or C617 be moved for further alignment.

(d) Tune the frequency of FM RF signal generator to 88.1MHz exactly, and the tuning of the receiver to 88.1MHz as well. Align L601 (Antenna coil) and L603 (RF coil) to obtain the maximum indication of the V.T.V.M.

(e) Tune the frequency of FM RF signal generator to 107.9MHz, and the tuning of the receiver to 107.9MHz as well. Move L601 and L603 to observe the reading of the V.T.V.M. If the indication of the V.T.V.M. increases when the density of coils winding decreases (becomes coarse), replace C603 and C610 with other capacitors having smaller capacity, and then perform the alignment of procedure (d). To the contrary, when the density of coils winding increases (becomes dense), replace C603 and C610 with other capacitors having larger capacity.

(f) Repeat the alignment of procedure (d) and (e) to obtain the maximum indication of the V.T.V.M.

Note: Since C603, C610 and C617 are chip capacitors, soldering iron used in soldering should be less than 30W, and the temperature of the iron tip should be less than 280°C. Do not touch ceramic part directly with iron tip when performing operation.

Note:

1. If the change of indication of the V.T.V.M. is only a bit when moving L601 and L603 for adjustment, adjust L605 at 88.1MHz to obtain maximum sensitivity.
2. The characteristics of D601, D602 and D603 are similar so that the three components should be replaced at the same time even if only one of the three is defective or damaged. Otherwise, the specified performance may not be obtained even the above mentioned adjustments are performed repeatedly.
3. Whenever (B) FM RF board alignment is done, it must be followed by (A) FM IF alignment.

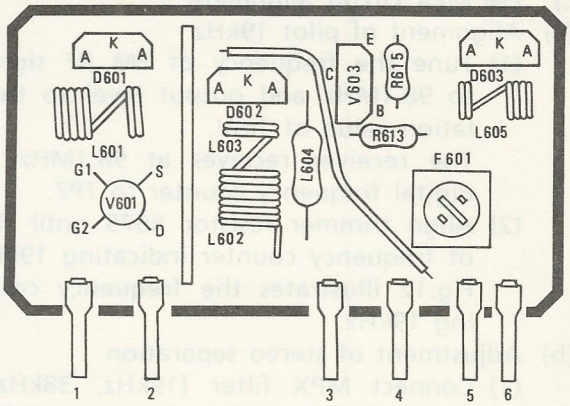

Fig. 11

(C) FM MPX circuit alignment

(a) Alignment of pilot 19kHz

(1) Tune the frequency of FM RF signal generator to 98.1MHz and output level to the not modulation value of 1mV.
The receiver receives at 98.1MHz. Connect a digital frequency counter to TP7.

(2) Align trimmer resistor R675 until the indication of frequency counter indicating 19kHz. Refer to Fig.12 illustrates the frequency counter indicating 19kHz.

(b) Adjustment of stereo separation

(1) Connect MPX filter (19kHz, 38kHz Null filter) between the speaker output and AC V.T.V.M.
Set the output level of FM RF signal generator to 1mV, and set the modulator to 75kHz deviation (10% for pilot signal and 90% for 1kHz main signal L + R).

(2) Tune the mode selector of the stereo modulator to the R channel. Align trimmer resistor R667 to obtain maximum separation.
In case L channel is selected by the mode selector, also perform the adjustment similarly. If the trimmer resistor R667 of the mode selector is set in different position for R and L channels, align it so that equal separation can be obtained on both channels.

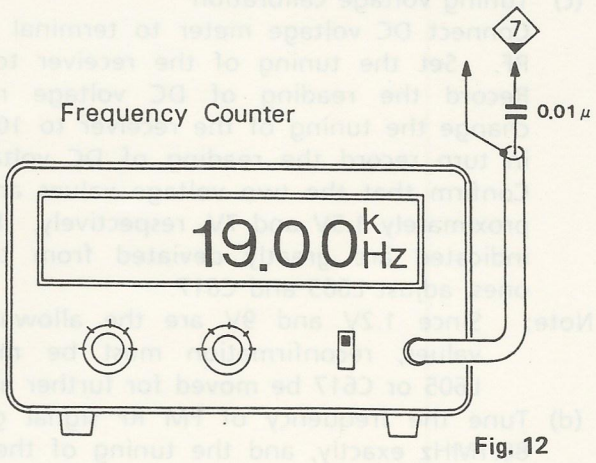

Fig. 12

DOLBY NR CIRCUIT

Equipment required

1. Stabilized power supply (DC 14V)
2. AC V.T.V.M.
3. Dolby NR level calibration tape (TEAC MTT-150 or equivalent)

(A) Dolby NR tape level adjustment

(a) Play back Dolby NR level calibration tape.

(b) Set Dolby NR switch H62 to "OFF" position and adjust the trimmer resistor R110 (L ch) and R210 (R ch) for tape level adjustment in order to obtain 650mV of reading on V.T.V.M. at the test point of TP9 (L ch) and TP10 (R ch).

(c) The difference of the level between Forward and Reverse directions of the tape transport/reproduction should by ± 1 dB. (Refer to Fig. 13.)

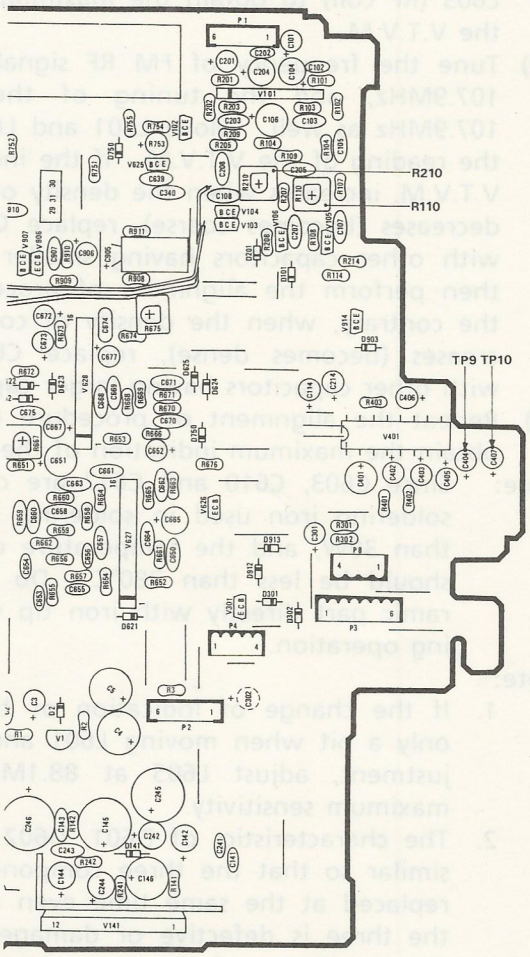

Fig. 13

TROUBLESHOOTING

RADIO SECTION

SYMPTOM	DEFECTIVE CIRCUIT		DEFECTIVE POINT AND CAUSE
NO SOUND	AM/FM SECTION	Antenna input circuit	* Antenna input circuit defective. Check wiring. * Poor antenna contact. Due to lower sensitivity, it does search scanning but not search stop.
		Power supply circuit	* Power supply circuit defective. V681 or D681 defective. V110 or D102 defective.
		Switching circuit	* Diode D621, D624, D625 or D751 defective. * IC V628 defective. Check pin voltage of V628.
		Muting circuit	* Transistor V301, V302 or V303 defective.
	AM SECTION	Antenna input circuit	* Antenna input circuit defective. Noise choke coil L706 defective.
		RF, OSC, IF circuit	* AM IC V704 defective. Check pin voltage of V704. * Semiconductor defective. Check voltage of V701 and V702. * V701, L702, L703, L704, F701 or F702 open. * Q702 defective.
		Power supply circuit	* Power supply circuit defective.
		Connection of AM board	* Insufficient soldering at the terminal of AM board. * Cracked pattern at the terminal of AM board.
	FM SECTION	Power supply circuit	* Power supply circuit defective. Check voltage V682.
		RF, OSC circuit	* Semiconductor defective. Check voltage of V601, V602, V603 and V604. * Diode D601, D602 or D603 defective. * L601, L602, L603, L605 or F601 open or insufficient soldering.
		IF circuit	* Semiconductor defective. Check pin voltage of V622 and IF IC V623. * F621, Q601 or Q602 defective.
		ASU circuit	* ASU circuit defective. Check pin voltage of ASU IC V627.

TROUBLESHOOTING

SYMPTOM	DEFECTIVE CIRCUIT		DEFECTIVE POINT AND CAUSE
INSUFFICIENT SOUND	AM/FM SECTION	Antenna input circuit	* Poor antenna contact. * Capacitor C600 defective.
		MPX circuit	* MPX circuit defective. Check pin voltage of IC V628.
	AM SECTION	RF, IF circuit	* Deviation in tracking alignment (L703, L704). * Deviation in IF transformer F701 or F702. * Transistor V701 or FET V704 defective. * Diode D702 or D703 defective.
	FM SECTION	RF, IF circuit	* Deviation in tracking alignment (L601, L603). * RF amplifier V601 defective. * Diode D601 or D602 defective. * IF transformer F601 defective. * IF amplifier V622 and IC V623 defective. Check for voltage of V622 and V623. * F601 misalignment. * Capacitor C600 defective.
		ASU circuit	* ASU circuit defective. Check pin voltage of IC V627.
DISTORTED SOUND	AM SECTION	IF circuit	* Q702 defective. * AM IC V704 defective. * F701 or F702 misalignment.
OSCILLATION	FM SECTION	IF circuit	* Misalignment or defective of F621. * Q601 or Q602 defective.
	AM/FM SECTION	Power supply circuit	* Capacitor C681 defective.
	AM SECTION	RF, IF circuit	* Capacitor C708, C710, C721 or C726 defective.
	FM SECTION	RF, IF circuit	* RF circuit defective. Capacitor C607, C608, C609 or C621 defective. * IF circuit defective. Capacitor C623, C624, C632 or C634 defective.
POOR NB		NB circuit	* NB IC V627 defective. Check pin voltage of V627. * Capacitor C657, V658, C659 or C660 defective. * Capacitor C663 defective.
POOR MUTE IN SEARCH SCANNING AND AM/FM SWITCH POP NOISE	MUTE SECTION		* Semiconductor defective. Transistor V301, V302 or V303 defective. Diode D301 defective. * Capacitor C301 open.

TROUBLESHOOTING

SYMPTOM	DEFECTIVE CIRCUIT		DEFECTIVE POINT AND CAUSE
POOR STEREO EFFECT		NB circuit	* NB IC V627 defective. Check pin voltage of V627. * Capacitor C653, C654, C655 or C656 defective.
		MPX circuit	* MPX IC V628 defective. Check pin voltage of V628. * R667 and R674 misalignment.
INDICATOR DOES NOT LIGHT	LCD SECTION		* Check the wiring of indicator circuit. * Regulator IC V1 defective. Check pin voltage of V1. * Insufficient soldering at the terminal of LCD penal. * PLL IC V901 defective. * LCD panel defective.
	STEREO INDICATOR		* Check the wiring of stereo indicator circuit. * Transistor V904 or diode D909 defective. * MPX IC V628 defective. * PLL IC V901 defective.
LESS SENSITIVITY DRIFT OCCURS WITH AIR CONDITIONER IS ON			* If the set was installed near the blower of the air conditioner, the sensitivity drift will be created by the temperature (Hot or Cold). Avoid installing the set near air conditioner is unavoidable, isolate the set by isolating material from the air conditioner.
ENGINE NOISE IS EXTREME	MOTOR COMPARTMENT		* Missing or poor connection of resistor wire on high tension coil of car. Insert noise preventing resistor between ignition coil and distributor of car. * Missing or poor connection of noise silencer by alternator of car. Install specified noise silencer on the alternator. * Missing or poor connection of grounding wire between engine chassis and engine, transmission and engine chassis of car.
	ANTENNA GROUND CIRCUIT		* Missing or poor connection of grounding wire for antenna to grounding point of the car chassis.

TROUBLESHOOTING

TAPE SECTION

SYMPTOM	DEFECTIVE CIRCUIT	DEFECTIVE POINT AND CAUSE
NO SOUND	Power supply circuit	* Switch H2 defective.
	Mechanism or motor	* Motor does not run. Motor defective. Resistor R3 defective. * Mechanism defective. Check for running of tape.
	Pre amplifier circuit	* Pre amplifier defective. Check each pin voltage of pre amplifier IC V101. * Leakage of large amount of DC current into capacitor C104 or C204. * Head lead wire open. * Capacitor C106 short.
DISTORTED SOUND OR INSUFFICIENT SOUND	Pre amplifier circuit	* Pre amplifier circuit defective. Check each pin voltage of pre amplifier IC V101.
	Head	* Head surface dirty. * Head azimuth angle misalignment.
OSCILLATION	Pre amplifier circuit	* C101, C105, C201 or C205 capacity insufficient or open.
ABNORMAL TAPE SPEED	Mechanism or motor	* Mechanism defective. * Motor defective.
WOW AND FLUTTER	Flywheel drive section	* Flywheel, capstan or intermediate gear defective. * Reel table defective. * Belt, pinchroller, idler, flywheel or pulley defective. * Motor defective.
NO SELECTION	Cassette program selection circuit	* Cassette program selection defective.
DOES NOT WORK FUNCTION SWITCHES	ATR mechanism	* H3 defective. * Does not reverse when program selector is depressed. * ATR mechanism defective. * Does not reverse when the end of tape comes.
POOR DOLBY NR EFFECT OR NO SOUND	Dolby NR circuit	* Check wiring and Dolby ON/OFF switch H62. * Transistor V910 or V914 defective. * IC V401 defective. Check each pin voltage of IC V401. * Diode D914 defective.
NO SELECTION ON APS	Cassette program selection circuit	* Check wiring or APS ON/OFF switch H63. * Transistor V3, V4, V5 or V6 defective. * Zener diode D3 defective. * APS IC V2 defective. Check each pin voltage of APS IC V2.

TROUBLESHOOTING

RADIO AND TAPE SECTION

SYMPTOM	DEFECTIVE CIRCUIT	DEFECTIVE POINT AND CAUSE
NO SOUND	Power supply circuit	* Fuse open. * Faulty connection between battery. * Switch H1 defective. * Choke transformer L1 lead wire cold soldered.
	Output circuit	* Speaker voice coil open. * Faulty connection between speaker and connection core. * Power amplifier IC V141 defective. Check each pin voltage of IC V141.
	Control circuit	* Variable resistor R124, R125, R126, R224 or R225 defective.
	Flat amplifier circuit	* Flat amplifier circuit defective. Check voltage of transistor V112 and V212.
	Switching circuit	* Diode D101, D201, D624 or D625 defective.
	Muting circuit	* Transistor V301, V302 or V303 defective.
DISTORTED SOUND OR INSUFFICIENT SOUND	Output circuit	* Power amplifier circuit defective. Check each pin voltage of V141. * Capacitor C145 or C245 defective.
	Control circuit	* Variable resistor R124, R125, R126, R224 or R225 defective.
	Flat amplifier circuit	* Flat amplifier circuit defective. Check voltage of transistor V112 and V212.
OSCILLATION	Output circuit	* C1 or C246 capacitor insufficient or open. C143 or C243 capacity insufficient. R142 or R242 resistance insufficient.
ENGINE NOISE IS EXTREME	Power supply circuit	* Missing or poor connection of ground wire. * C1, C3, C106, C115 or C116 capacity insufficient. * R1 resistance insufficient. * Transistor V110 or zener diode D102 defective. Check voltage of transistor V110.

TROUBLESHOOTING

CONTROL SECTION

SYMPTOM	DEFECTIVE CIRCUIT	DEFECTIVE POINT AND CAUSE
CONTENTS OF THE MEMORY IS LOST		* Disconnection of back-up wire. * PLL IC V901 defective.
DISPLAY NEITHER TIME NOR FREQUENCY	Power supply circuit or battery back-up circuit	* Diode D901, D902 defective. * Regulator IC V1 defective. * Resistor R2 defective. * Faulty connection to the 4-pin socket (N4).
DISPLAY DOES NOT CHANGE		* H2 defective. * Faulty connection to the 11-pin socket (N5). * Transistor V903 or D908 defective.
MANUAL TUNING INOPERATIVE		* Faulty connection to the 11-pin socket (N5). * H51 or H52 defective.
PRESETTING OR SELECTION OF PRESET STATIONS INOPERATIVE		* Diode D903, D904, D905, D906 defective. * Switch defective (H53, H54, H55, H56, H57, H58). * Faulty connection to the 11-pin socket (N5). * PLL IC V901 defective.
NO SEARCH SEEKING	AM/FM SECTION PLL circuit	* Transistor V906, V907, V911 or V914 defective. * 2-core shielding wire cold soldered. * PLL IC V901 defective.
THE UNIT SEARCH SEEKS BUT DOES NOT STOP	AM/FM SECTION Stop circuit	* Transistor V625 or V905 defective. * Diode D910 defective. * Faulty connection to the 6-pin socket (N3). * PLL IC V901 defective.
	AM SECTION	* C753 or D750 defective. * AM IC V704 defective. * Ceramic filter Q701 defective.
	FM SECTION	* Transistor V624 defective. * IF IC V623 defective.

WIRING LAYOUT

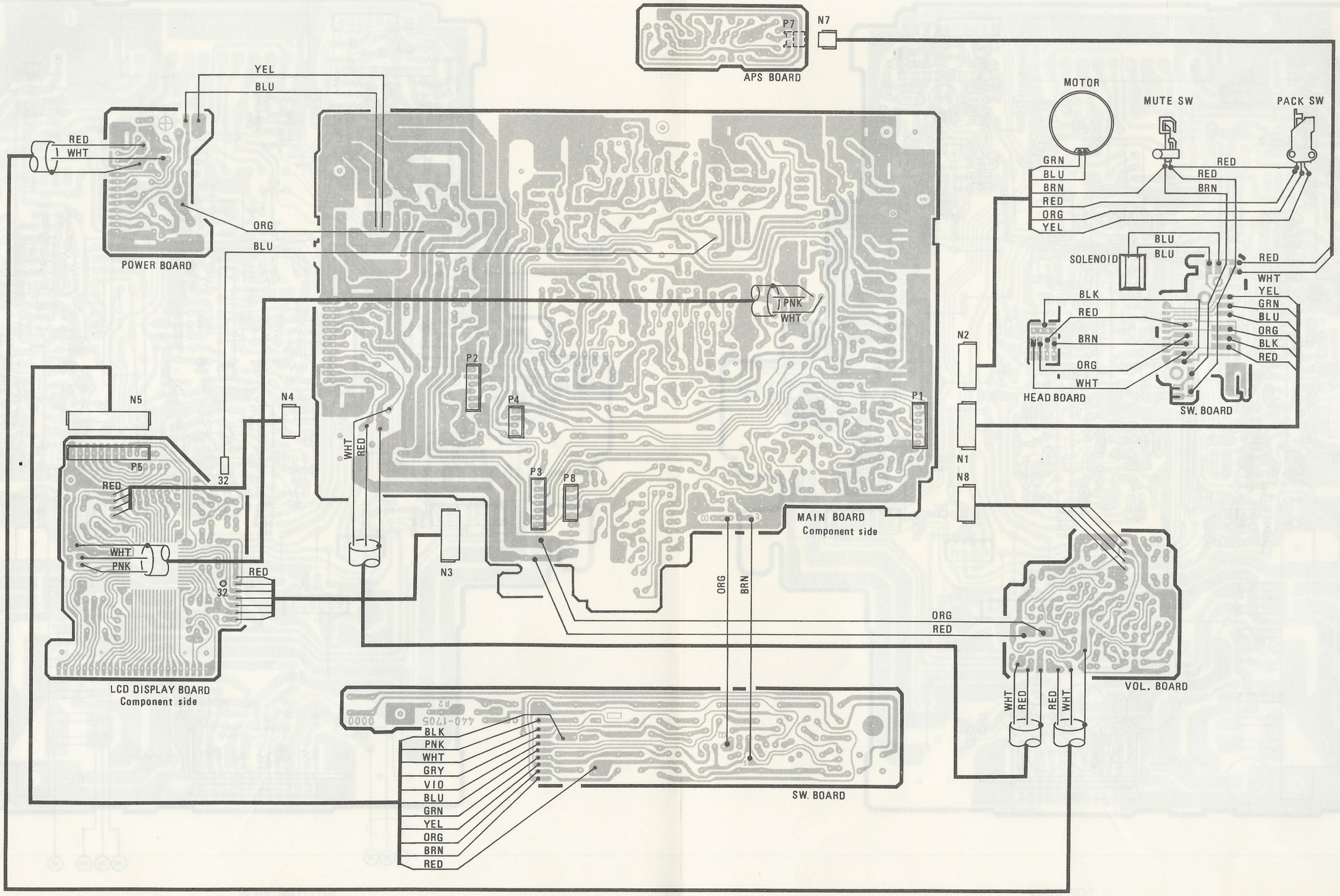

MAIN CIRCUIT BOARD COMPONENT LOCATION GUIDE

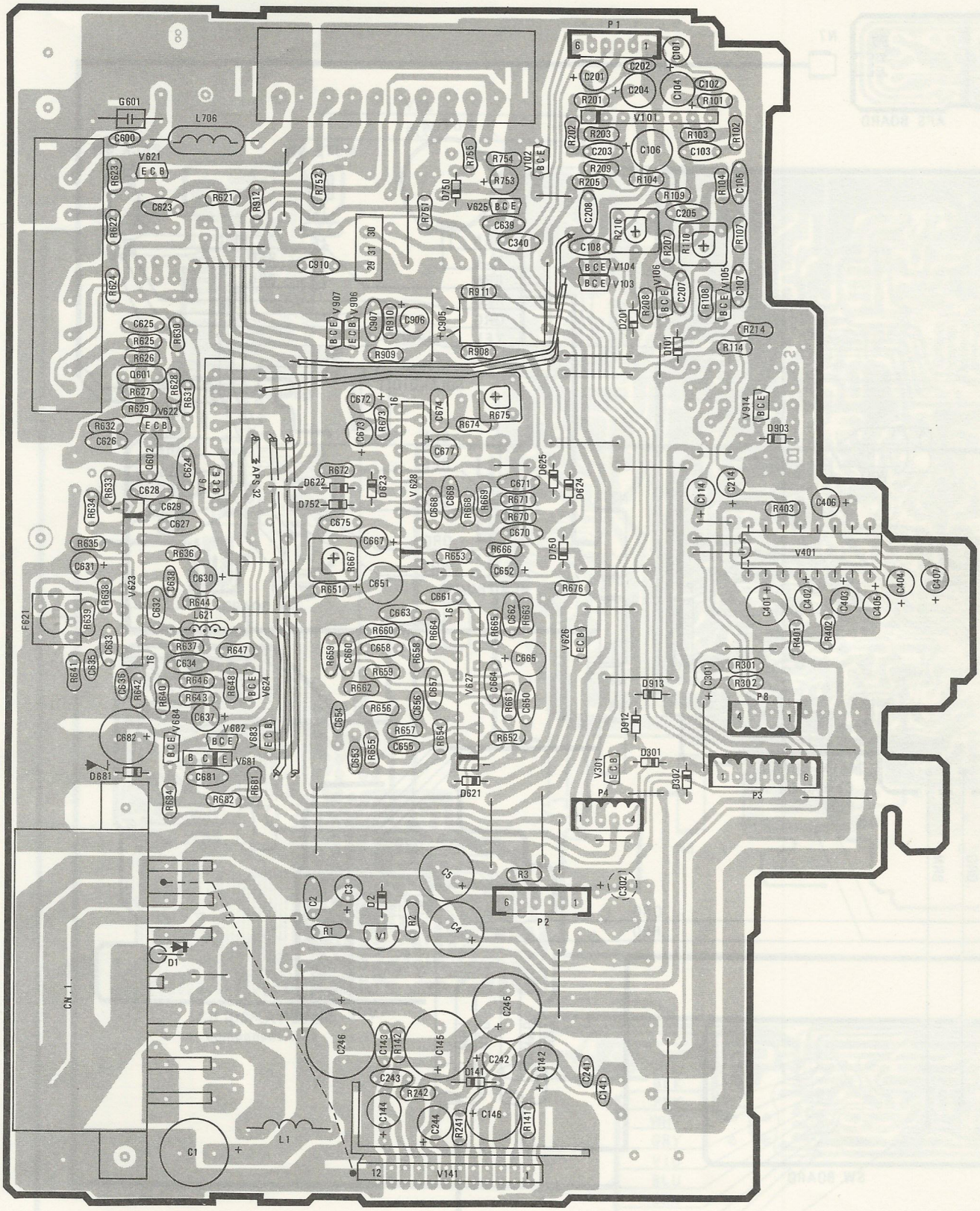

TOP VIEW

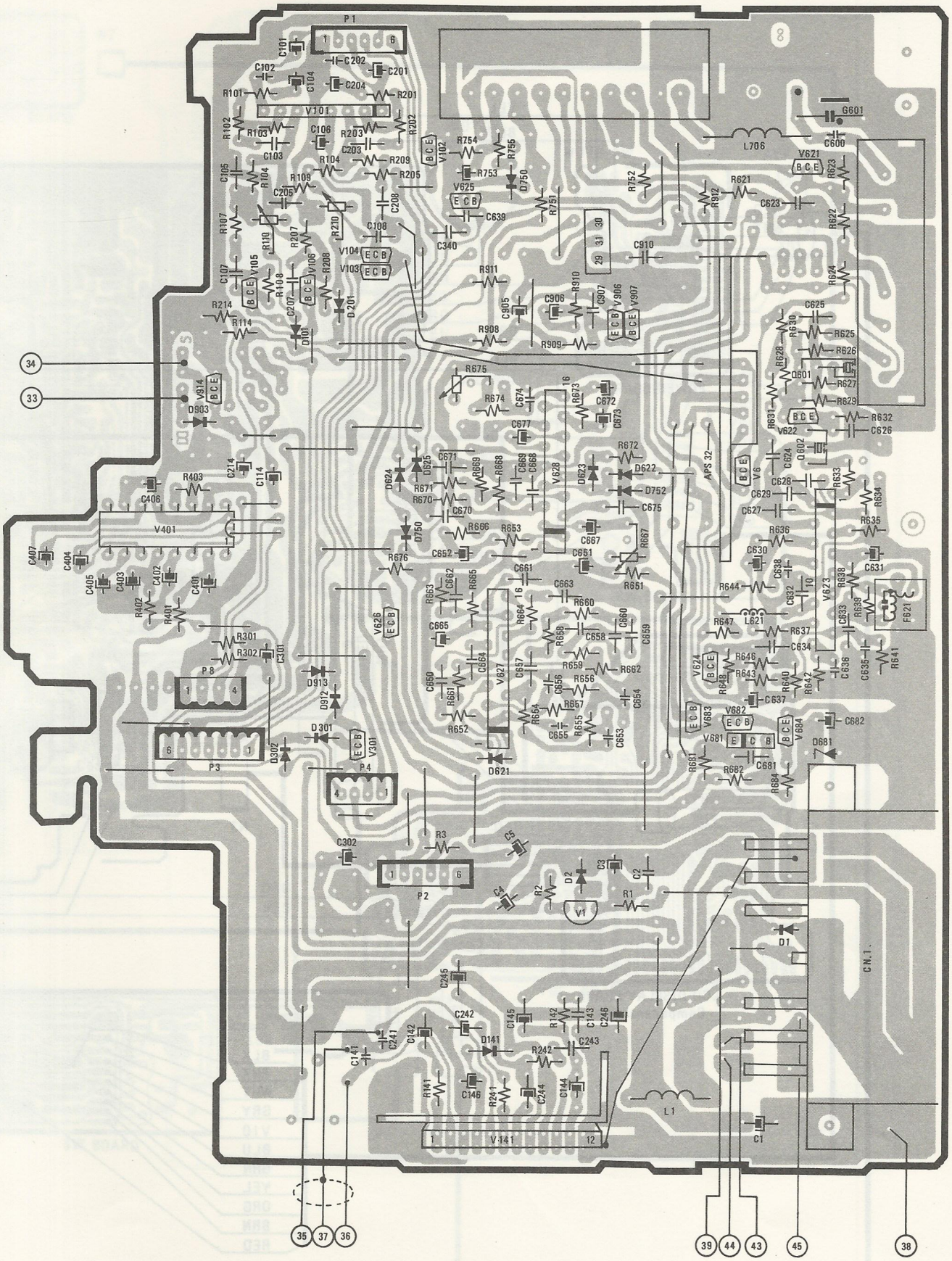
P1
P2
P3
P4
P8
V101
V401
V141
V1
L706
L1
L621
F621
G601
C.N.1
34
33
35
37
36
39
44
43
45
38

BOTTOM VIEW

REF. NO.31 CTP-1627 MAIN CIRCUIT BOARD ASSEMBLY PARTS LIST

REF. NO.	DESCRIPTION				PART NO.	MFR'S NO.
–	Main printed circuit board					440-1713-0101
C1, 246	Electrolytic capacitor	1000μF	16V			250-102M-1C00-057
C2, 624, 625, 626, 627, 628, 629, 632, 633, 634, 639, 640, 675, 907	Monolithic capacitor	0.022μF	25V			262-223M-1EJR-111
C3, 106	Electrolytic capacitor	47μF	16V			250-470M-1C00-122
C4	Electrolytic capacitor	470μF	10V			250-471M-1A00-047
C5, 146, 905	Electrolytic capacitor	220μF	16V			250-221M-1C00-045
C101, 201, 630, 631	Electrolytic capacitor	2.2μF	50V			250-2R2M-1H00-114
C102, 141, 202, 241	Ceramic capacitor	0.001μF	50V			261-102K-1HJB-110
C103, 203	Monolithic capacitor	0.018μF	25V			262-183K-1EJR-111
C104, 204	Electrolytic capacitor	100μF	10V			250-101M-1A00-025
C105, 205, 662, 670, 671	Monolithic capacitor	0.001μF	25V			262-102M-1EJR-106
C107, 207	Monolithic capacitor	0.022μF	25V			262-223K-1EJR-111
C108, 208	Monolithic capacitor	0.015μF	25V			262-153M-1EJR-111
C114, 214, 406	Electrolytic capacitor	0.22μF	50V			250-R22M-1H00-114
C142, 144, 242, 244	Electrolytic capacitor	100μF	10V			250-101M-1A00-128
C143, 243	Monolithic capacitor	0.1μF	16V			262-104M-1CJR-125
C145, 245	Electrolytic capacitor	1000μF	10V			250-102M-1A00-057
C301, 637, 652	Electrolytic capacitor	4.7μF	25V			250-4R7M-1E00-114
C302, 402, 403, 677, 753	Electrolytic capacitor	1μF	50V			250-1R0M-1H00-114
C401, 651	Electrolytic capacitor	100μF	10V			250-101M-1A00-133
C404, 407	Electrolytic capacitor	2.2μF	50V			250-2R2M-1H00-111
C405	Electrolytic capacitor	0.22μF	50V			250-R22M-1H00-111
C600, 635, 636	Ceramic capacitor	33pF	50V			260-330K-1H00-105
C623	Monolithic capacitor	0.033μF	25V			262-333M-1EJR-116
C638	Ceramic capacitor	100pF	50V			260-101K-1H00-110
C650	Monolithic capacitor	0.0068μF	25V			262-682M-1EJR-106
C653, 654	Ceramic capacitor	680pF	50V			261-681K-1HJB-105
C655	Ceramic capacitor	0.0012μF	50V			261-122K-1HJB-110
C656	Ceramic capacitor	68pF	50V			260-680K-1H00-115
C657, 658, 659, 660	Ceramic capacitor	270pF	50V			260-271J-1H00-120
C661	Monolithic capacitor	0.0033μF	25V			262-332M-1EJR-106
C663, 664, 681	Monolithic capacitor	0.01μF	25V			262-103M-1EJR-106
C665	Electrolytic capacitor	22μF	6.3V			250-220M-0J00-114
C667	Electrolytic capacitor	10μF	16V			250-100M-1C00-114
C668, 669	Monolithic capacitor	0.0082μF				262-822K-1EJR-106
C672	Electrolytic capacitor	3.3μF	50V			250-3R3M-1H00-114
C673	Electrolytic capacitor	0.47μF	50V			250-R47M-1H00-114
C674	Polypropylene film capacitor	0.001μF	100V			272-102J-2A00-010
C682	Electrolytic capacitor	220μF	10V			250-221M-1A00-036
C906	Electrolytic capacitor	2.2μF	50V			252-2R2M-1H00-114
CN1	13P plug				ESC-0327	412-0327-0000
D1	Diode ERB12-02				ETD-ERB12	304-0032-1100
D2, 101, 141, 201, 301, 302, 621, 622, 623, 624, 625, 750, 751, 752, 912, 913, 914	Diode MA165				ETD-MA165	304-0037-0001
D681	Zener diode HZS10N(B1)				ETD-HZS10N	306-0101-1001
F621	Quadrature tank coil				ELD-0357	351-0357-0900
G601	Surge protector				EIN-0005	431-0005-0000
L1	Choke coil				ELD-0213	351-0213-1400
L621	Inductor 4.7μH				ELD-0334	351-0334-1201
L706	Choke coil 15μH				ELA-0035	352-0035-1100
P1, 2	6P plug				ESC-0231	412-0231-0000
P3	7P plug				ESC-0222	412-0222-0000
P4, 8	4P plug				ESC-0273	412-0273-0000
P7	2P plug				ESC-0204	412-0204-0000
Q601, 602	Ceramic filter				EOP-0010	360-0010-0401
R1, 105	Carbon film resistor	150 ohm	1/6W	±5%		200-151J-2C00-110
R2, 681	Carbon film resistor	2.2 ohm	1/6W	±5%		200-2R2J-2C00-110
R3	Carbon film resistor	3.3 ohm	1/6W	±5%		200-3R3J-2C00-110
R101, 201, 625, 912	Carbon film resistor	100 ohm	1/6W	±5%		200-101J-2C00-110
R102, 202	Carbon film resistor	8.2k ohm	1/6W	±5%		200-822J-2C00-110
R103, 203	Carbon film resistor	120k ohm	1/6W	±5%		200-124J-2C00-110
R104, 204, 629, 658, 659	Carbon film resistor	2.2k ohm	1/6W	±5%		200-222J-2C00-110

REF. NO.	DESCRIPTION				PART NO.	MFR'S NO.
R107, 207	Carbon film resistor	1.8k ohm	1/6W	±5%		200-182J-2C00-110
R108, 208, 623, 646, 648, 661	Carbon film resistor	100k ohm	1/6W	±5%		200-104J-2C00-110
R109, 209	Carbon film resistor	27k ohm	1/6W	±5%		200-273J-2C00-110
R110, 210	Trimmer resistor 50k ohm-B				ECRV-1007	340-1007-0200
R114, 214, 402, 635, 662, 666, 684, 754, 755	Carbon film resistor	22k ohm	1/6W	±5%		200-223J-2C00-110
R141, 241	Carbon film resistor	27 ohm	1/6W	±5%		200-270J-2C00-110
R142, 242	Carbon film resistor	4.7 ohm	1/6W	±5%		200-4R7J-2C00-110
R301, 621, 644, 653, 654, 655, 656, 657, 663, 676, 911	Carbon film resistor	4.7k ohm	1/6W	±5%		200-472J-2C00-110
R302, 640, 641, 647, 665	Carbon film resistor	47k ohm	1/6W	±5%		200-473J-2C00-110
R401	Carbon film resistor	68 ohm	1/6W	±5%		200-680J-2C00-110
R403, 664	Carbon film resistor	18k ohm	1/6W	±5%		200-183J-2C00-110
R622, 670, 671	Carbon film resistor	68k ohm	1/6W	±5%		200-683J-2C00-110
R624, 651, 752	Carbon film resistor	10 ohm	1/6W	±5%		200-100J-2C00-110
R626, 628, 630, 632, 673, 682, 908, 910	Carbon film resistor	1k ohm	1/6W	±5%		200-102J-2C00-110
R627	Carbon film resistor	180 ohm	1/6W	±5%		200-181J-2C00-110
R631	Carbon film resistor	330 ohm	1/6W	±5%		200-331J-2C00-110
R633	Carbon film resistor	220 ohm	1/6W	±5%		200-221J-2C00-110
R634	Carbon film resistor	120 ohm	1/6W	±5%		200-121J-2C00-110
R636, 639, 643, 909	Carbon film resistor	10k ohm	1/6W	±5%		200-103J-2C00-110
R637	Carbon film resistor	12k ohm	1/6W	±5%		200-123J-2C00-110
R638, 672	Carbon film resistor	6.8k ohm	1/6W	±5%		200-682J-2C00-110
R642	Carbon film resistor	82k ohm	1/6W	±5%		200-823J-2C00-110
R652	Carbon film resistor	3.9k ohm	1/6W	±5%		200-392J-2C00-110
R660	Carbon film resistor	2.7k ohm	1/6W	±5%		200-272J-2C00-110
R667	Trimmer resistor 20k ohm-B				ECRV-1006	340-1006-0200
R668, 669	Carbon film resistor	3.3k ohm	1/6W	±5%		200-332J-2C00-110
R674	Carbon film resistor	16k ohm	1/6W	±5%		200-163J-2C00-110
R675	Trimmer resistor 5k ohm-B				ECRV-1004	340-1004-0200
R751	Carbon film resistor	1.5k ohm	1/6W	±5%		200-152J-2C00-110
V1	Regulator IC AN8005				ETI-AN8005	310-0243-0000
V6, 102, 621, 626, 914	Transistor DTC124ES				ETTC-DTC124ES	302-0125-0001
V101	Pre amplifier IC LA3161				ETI-LA3161	310-0071-0000
V103, 104	Transistor DTC114TS				ETTC-DTC114TS	302-0134-0001
V105, 106	Transistor DTC144ES				ETTC-DTC144ES	302-0115-0001
V141	Power amplifier IC LA4445				ETI-LA4445	310-0317-0000
V301	Transistor DTA124ES				ETTA-DTA124ES	301-0046-0001
V401	Dolby B IC HA12136				ETI-HA12136	310-0329-0000
V622	Transistor 2SC930(D)				ETTC-2SC930	302-0014-1001
V623	FM IF IC LA1140				ETI-LA1140	310-0083-0000
V624, 684	Transistor 2SC2603(F)				ETTC-2SC2603	302-0091-1201-006
V625	Transistor DTC114YS				ETTC-DTC114YS	302-0131-0001
V627	NB IC LA2110				ETI-LA2110	310-0145-0000
V628	MPX IC LA3370				ETI-LA3370	310-0084-0000
V681	Transistor 2SD973(R)				ETTD-2SD973	302-0098-1100
V682	Transistor DTB123YS				ETTB-DTB123YS	301-0069-0001
V683	Transistor DTA114TS				ETTA-DTA114TS	301-0048-0001
V906, 907	Transistor 2SC2458L(BL)				ETTC-2SC2458L	302-0078-1401
	Holder - IC				PL-7404	100-7404-0000
	Pan head screw 3×10 (P-tight)				006310PT	020-0300-1000-421
	Jumper resistor					209-0009-0000
	Terminal lug				PL-6521	100-6521-0000

AM RF CIRCUIT BOARD COMPONENT LOCATION GUIDE

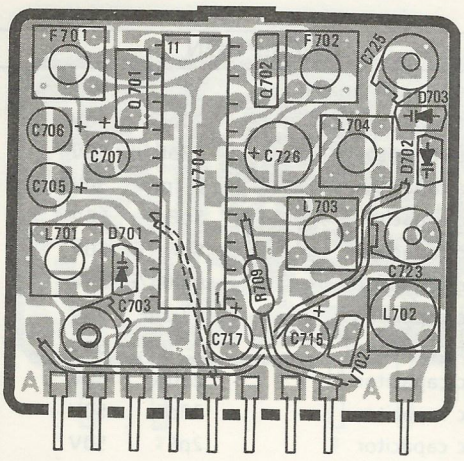

TOP VIEW

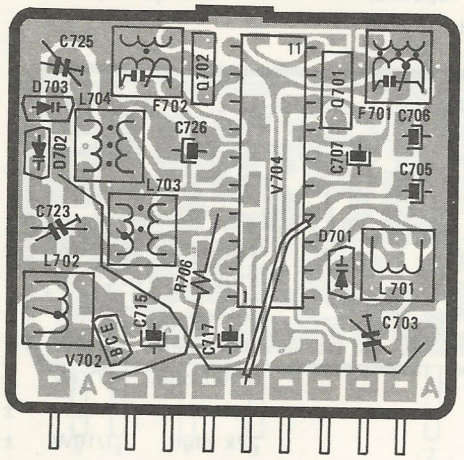

BOTTOM VIEW

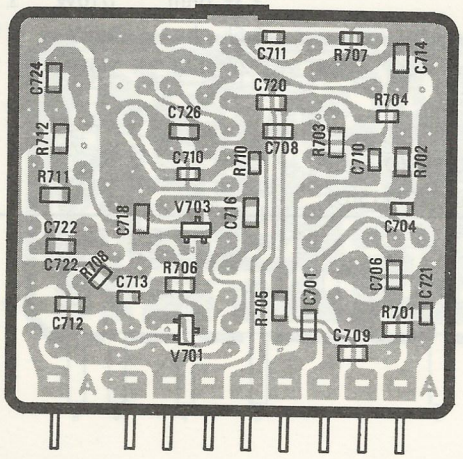

CHIP VIEW

REF. NO.26 AR-0219 AM RF CIRCUIT BOARD ASSEMBLY PARTS LIST

REF. NO.	DESCRIPTION				PART NO.	MFR'S NO.
–	AM RF printed circuit board					440-1715-0000
C701, 712, 714, 716, 718, 722, 724, 726	Chip ceramic capacitor	0.022μF	25V			263-223M-1EJB-210
C702	Chip ceramic capacitor	390pF	50V			265-391K-1EUJ-210
C703	Trimmer capacitor	50pF			ECCV-0106	345-0106-2300
C704	Chip ceramic capacitor	0.022μF	25V			263-223M-1EJB-201
C705	Electrolytic capacitor	4.7μF	25V			250-4R7M-1E00-012
C706	Electrolytic capacitor	3.3μF	50V			250-3R3M-1H00-012
C707	Electrolytic capacitor	0.47μF	50V			250-R47M-1H00-012
C708	Chip ceramic capacitor	0.01μF	25V			263-103M-1EJB-210
C709	Chip ceramic capacitor	0.0047μF	25V			263-472M-1EJB-210
C715	Electrolytic capacitor	22μF	6.3V			250-220M-0J00-012
C717	Electrolytic capacitor	1μF	50V			250-1R0M-1H00-012
C720	Electrolytic capacitor	100μF	16V			250-101M-1C00-033
C723, 725	Trimmer capacitor	10pF			ECCV-0105	345-0105-2300
D701, 702, 703	Diode SVC321SPA				ETC-SVC321	305-0014-1000
F701	IF coil				ELD-0366	351-0366-0900
F702	IF coil				ELD-0365	351-0365-0900
L701	OSC coil				ELD-0364	351-0364-0900
L702	ANT coil				ELD-0361	351-0361-0900
L703	RF coil				ELD-0362	351-0362-0900
L704	RF coil				ELD-0363	351-0363-0900
Q701	Ceramic filter				EOP-0064	360-0064-0400
Q702	Ceramic filter				EOP-0063	360-0063-0400
R701, 707, 711, 712	Chip resistor	100k ohm	1/8W	±5%		202-104J-2B00-040
R702	Chip resistor	8.2k ohm	1/8W	±5%		202-822J-2B00-040
R703	Chip resistor	82k ohm	1/8W	±5%		202-820J-2B00-040
R704	Chip resistor	10k ohm	1/10W	±5%		202-103J-2A00-050
R705	Chip resistor	2.7k ohm	1/8W	±5%		202-272J-2B00-040
R706	Chip resistor	56 ohm	1/8W	±5%		202-560J-2B00-040
R707	Chip resistor	100 ohm	1/8W	±5%		202-101J-2B00-040
R708	Chip resistor	100k ohm	1/10W	±5%		202-104J-2A00-050
R709	Carbon film resistor	2.7k ohm	1/6W	±5%		200-272J-2C00-010
R710	Chip resistor	82 ohm	1/10W	±5%		202-820J-2A00-050
V701	Chip transistor 2SC2812(L6)				ETTC-2SC2812	302-0109-1200
V702	FET 2SK427(T)				ETTF-2SK427	300-0041-1400
V703	Chip transistor 2SC2814(F3)				ETTC-2SC2814	302-0083-1100
V704	AM IC LA1135				ETI-LA1135	310-0148-0000

FM RF CIRCUIT BOARD COMPONENT LOCATION GUIDE

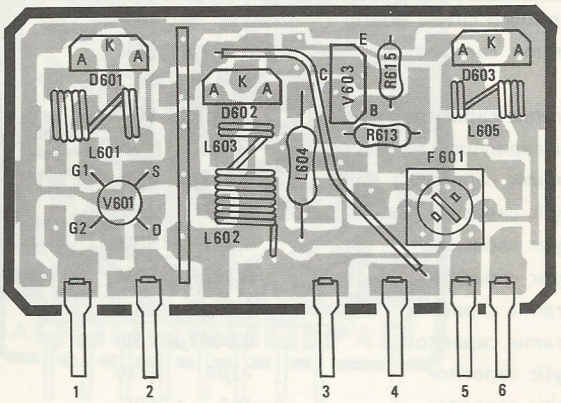

TOP VIEW

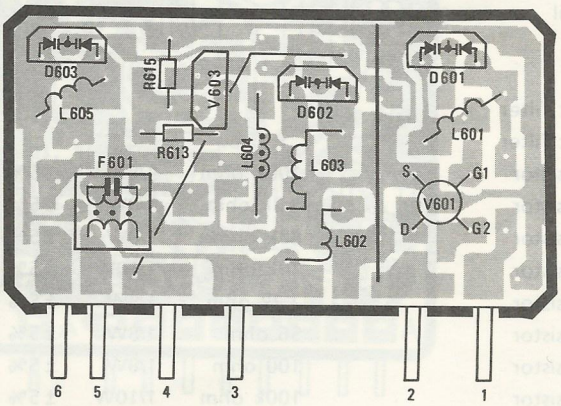

BOTTOM VIEW

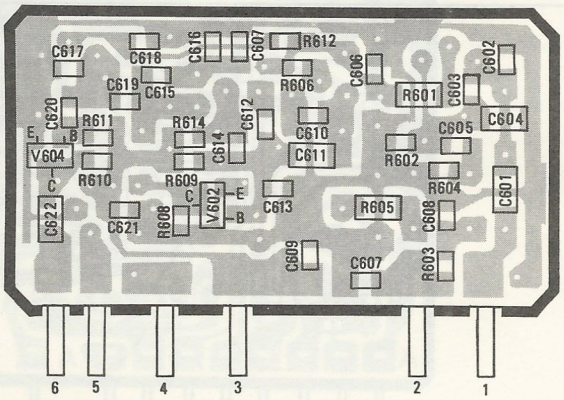

CHIP VIEW

REF. NO.27 AR-0209 FM RF CIRCUIT BOARD ASSEMBLY PARTS LIST

REF. NO.	DESCRIPTION				PART NO.	MFR'S NO.
–	FM RF printed circuit board					440-1659-0000
C601	Chip ceramic capacitor	20pF	50V			260-200D-1HSL-200
C602	Chip ceramic capacitor	22pF	50V			260-220D-1HUJ-200
C603, 617	Chip ceramic capacitor	0-7pF	50V			260-7R0D-1HUJ-211
C604, 611	Chip ceramic capacitor	5pF	50V			260-5R0D-1HUJ-211
C605, 619	Chip ceramic capacitor	8pF	50V			260-8R0D-1HUJ-200
C606	Chip ceramic capacitor	0.0047μF	25V			263-472K-1EJV-200
C607, 608, 609, 621	Chip ceramic capacitor	0.02μF	25V			263-203K-1EJV-200
C610	Chip ceramic capacitor	0-7 pF	50V			260-7R0D-1HCK-211
C612	Chip ceramic capacitor	220pF	50V			260-221D-1HSL-200
C613	Chip ceramic capacitor	22pF	50V			260-220D-1HSL-200
C614	Chip ceramic capacitor	2pF	50V			260-2R0D-1HSL-200
C615	Chip ceramic capacitor	27pF	50V			260-270D-1HUJ-200
C616	Chip ceramic capacitor	12pF	50V			260-120D-1HUJ-200
C618	Chip ceramic capacitor	56pF	50V			260-560D-1HTH-200
C620	Chip ceramic capacitor	1pF	50V			260-1R0D-1HUJ-200
C622	Chip ceramic capacitor	0.001μF	25V			263-102K-1EJV-211
D601, 602, 603	Varactor diode 1SV103				ETD-1SV103	305-0012-0000
F601	Transformer				ELD-0329	351-0329-1300
L601	ANT coil				ELA-0109	352-0109-1300
L602	RF coil				ELA-0116	352-0116-1300
L603	RF coil				ELA-0113	352-0113-1300
L604	IF trap coil				ELD-0328	351-0328-1200
L605	OSC coil				ELA-0114	352-0114-1300
R601, 606	Chip resistor	33k ohm	1/10W	±5%		202-333J-2A00-050
R602	Chip resistor	470k ohm	1/10W	±5%		202-474J-2A00-050
R603	Chip resistor	10k ohm	1/10W	±5%		202-103J-2A00-050
R604	Chip resistor	100k ohm	1/10W	±5%		202-104J-2A00-050
R605	Chip resistor	0-100 ohm	1/10W	±5%		202-101J-2A00-050
R607	Chip resistor	1.5k ohm	1/10W	±5%		202-152J-2A00-050
R608	Chip resistor	22k ohm	1/10W	±5%		202-223J-2A00-050
R609	Chip resistor	560k -1M ohm	1/10W	±5%		202-105J-2A00-050
R610, 614	Chip resistor	220 ohm	1/10W	±5%		202-220J-2A00-050
R611	Chip resistor	100k -330k ohm	1/10W	±5%		202-334J-2A00-050
R612	Chip resistor	3.3k ohm	1/10W	±5%		202-332J-2A00-050
R613	Carbon film resistor	5.6k ohm	1/6W	±5%		200-562J-2C00-010
R615	Carbon film resistor	12k ohm	1/6W	±5%		200-123J-2C00-010
V601	FET 3SK101(GR)				ETTF-3SK101	300-0020-1100
V602	Transistor 2SC2620(B)				ETTC-2SC2620	302-0070-1100
V603	Transistor 2SC2995(O)				ETTC-2SC2995	302-0161-0000
V604	Chip transistor 2SC2715(O)				ETTC-2SC2715	302-0159-0000

POWER AMPLIFIER CIRCUIT BOARD COMPONENT LOCATION GUIDE

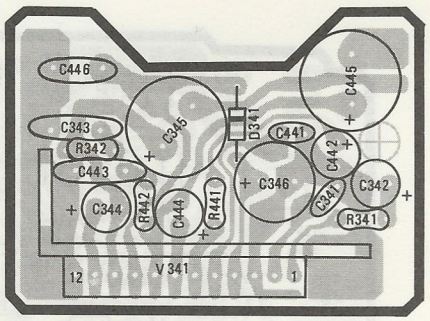

TOP VIEW

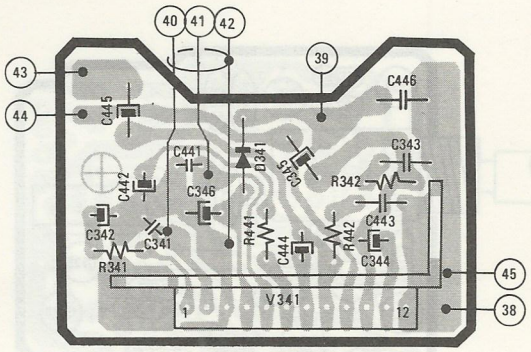

BOTTOM VIEW

REF. NO.29 CAP-1632-1 POWER AMPLIFIER CIRCUIT BOARD ASSEMBLY PARTS LIST

REF. NO.	DESCRIPTION				PART NO.	MFR'S NO.
–	Power amplifier printed circuit board					440-1706-0001
C341, 441	Ceramic capacitor	0.001μF	50V			261-102K-1HJB-010
C342, 344, 442, 444	Electrolytic capacitor	100μF	10V			250-101M-1A00-025
C343, 443, 446	Monolithic capacitor	0.1μF	16V			262-104M-1CJR-025
C345, 445	Electrolytic capacitor	1000μF	10V			250-102M-1A00-057
C346	Electrolytic capacitor	220μF	16V			250-221M-1C00-045
D341	Diode MA165				ETD-MA165	304-0037-0000
R341, 441	Carbon film resistor	27 ohm	1/6W	±5%		200-270J-2C00-010
R342, 442	Carbon film resistor	4.7 ohm	1/6W	±5%		200-4R7J-2C00-010
V341	Power amplifier IC LA4445				ETI-LA4445	310-0317-0000
	Holder - IC				PL-7404	100-7404-0000

APS CIRCUIT BOARD COMPONENT LOCATION GUIDE

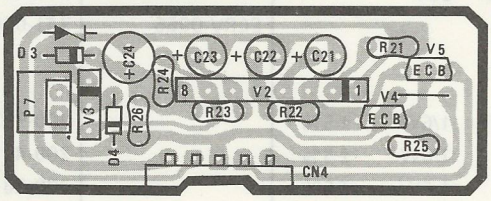

TOP VIEW

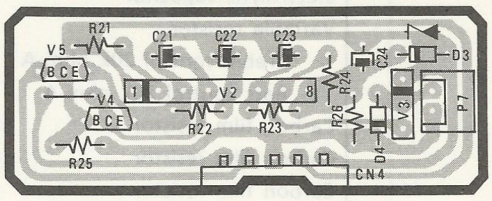

BOTTOM VIEW

REF. NO.28 CTP-1633 APS CIRCUIT BOARD ASSEMBLY PARTS LIST

REF. NO.	DESCRIPTION				PART NO.	MFR'S NO.
–	APS printed circuit board					440-1713-0400
C21	Electrolytic capacitor	1μF	50V			250-1R0M-1H00-114
C22, 23	Electrolytic capacitor	10μF	16V			250-100M-1C00-114
C24	Electrolytic capacitor	47μF	16V			250-470M-1C00-114
CN4	5P plug				ESC-0421	412-0421-0000
D3	Zener diode HZS10N(B1)				ETD-HZS10N	306-0101-1001
D4	Diode ERA15-02				ETD-ERA15	304-0064-1001
P7	2P plug				ESC-0204	412-0204-0000
R21	Carbon film resistor	1M ohm	1/6W	±5%		200-105J-2C00-110
R22	Carbon film resistor	560k ohm	1/6W	±5%		200-564J-2C00-110
R23, 25	Carbon film resistor	22k ohm	1/6W	±5%		200-223J-2C00-110
R24	Carbon film resistor	680 ohm	1/6W	±5%		200-681J-2C00-110
R26	Carbon film resistor	220 ohm	1/6W	±5%		200-221J-2C00-110
V2	APS IC M51143AL				ETI-M51143AL	310-0086-0000
V3	Transistor 2SC973(R)				ETTD-2SD973	302-0098-1100
V4, 5	Transistor DTC124ES				ETTC-DTC124ES	302-0125-0001

VOLUME CONTROL CIRCUIT BOARD COMPONENT LOCATION GUIDE

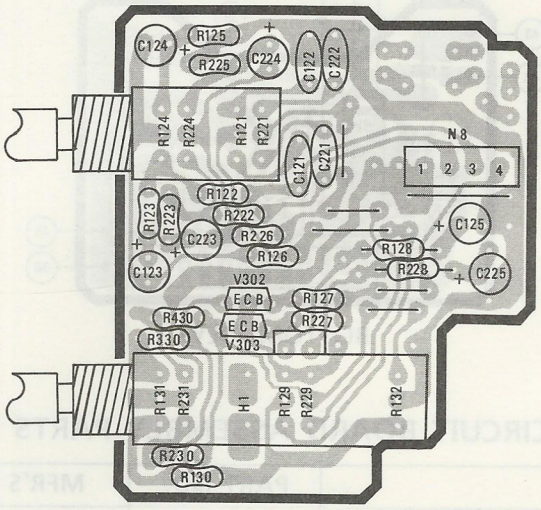

TOP VIEW

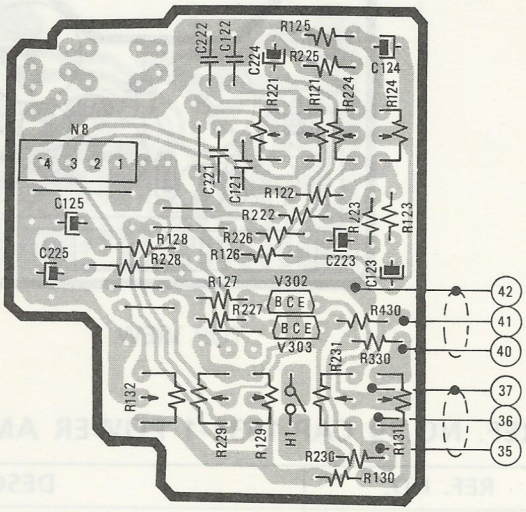

BOTTOM VIEW

REF. NO.34 CAP-1628 VOLUME CONTROL CIRCUIT BOARD ASSEMBLY PARTS LIST

REF. NO.	DESCRIPTION				PART NO.	MFR'S NO.
–	Volume control printed circuit board					440-1713-0300
C121, 221	Monolithic capacitor	0.0068μF	25V			262-682K-1EJR-106
C122, 222	Monolithic capacitor	0.047μF	25V			262-473K-1EJR-120
C123, 223	Electrolytic capacitor	0.1μF	50V			250-R10M-1H00-114
C124, 224	Electrolytic capacitor	0.47μF	50V			250-R47M-1H00-114
C125, 225	Electrolytic capacitor	0.15μF	50V			250-R15M-1H00-114
	Variable resistor				ECRV-0066	341-0066-0100
R121, 221	Treble control 20k ohm-A					
R124, 224	Bass control 20k ohm-A					
R122, 222	Carbon film resistor	3.3k ohm	1/6W	±5%		200-332J-2C00-110
R123, 223	Carbon film resistor	470 ohm	1/6W	±5%		200-471J-2C00-110
R125, 225	Carbon film resistor	680 ohm	1/6W	±5%		200-681J-2C00-110
R126, 226	Carbon film resistor	1.2k ohm	1/6W	±5%		200-122J-2C00-110
R127, 130, 227, 230, 330, 430	Carbon film resistor	4.7k ohm	1/6W	±5%		200-472J-2C00-110
R128, 228	Carbon film resistor	1.5k ohm	1/6W	±5%		200-152J-2C00-110
	Variable resistor with switch				ECRV-0067	341-0067-0100
R129, 229	Volume control 50k ohm-A					
R131, 231	Fader control 30k ohm-W					
R132	Balance control 30k ohm-B					
H1	Power ON/OFF					
V302, 303	Transistor 2SC2603(F)				ETTC-2SC2603	302-0091-1201-006

LCD DISPLAY CIRCUIT BOARD COMPONENT LOCATION GUIDE

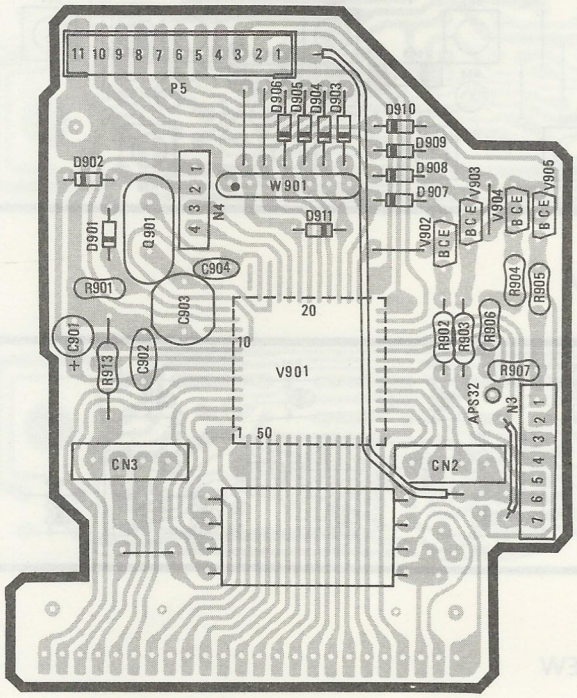

TOP VIEW

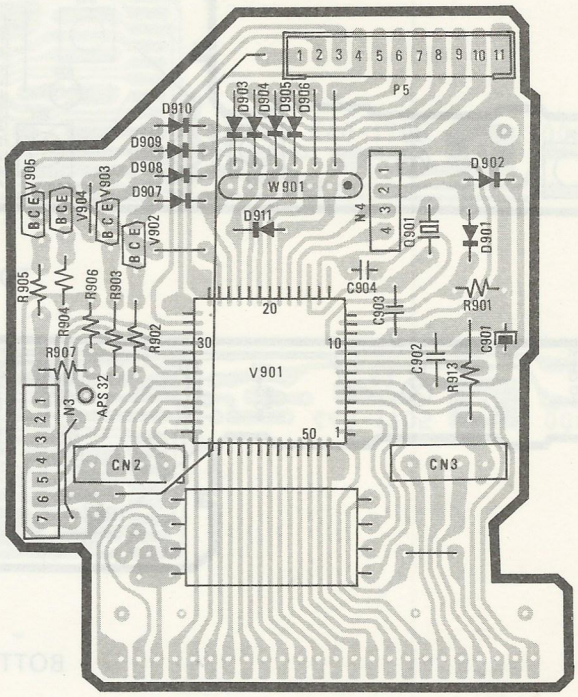

BOTTOM VIEW

REF. NO.9 CTP-1629 LCD DISPLAY CIRCUIT BOARD ASSEMBLY PARTS LIST

REF. NO.	DESCRIPTION				PART NO.	MFR'S NO.
–	LCD display printed circuit board					440-1713-0200
C901	Electrolytic capacitor	10μF	16V			250-100M-1C00-114
C902	Monolithic capacitor	0.022μF	25V			262-223M-1EJR-111
C903	Trimmer capacitor	28pF			ECCV-0101	341-0101-0100
C904	Ceramic capacitor	22pF	50V			260-220K-1HCH-105
D901, 902, 903, 904, 905, 906, 907, 908, 909, 910, 911	Diode MA165				ETD-MA165	304-0037-0001
P5	11P plug				ESC-0420	412-0420-0000
Q901	Crystal 4.5MHz				EOC-0022	361-0022-1900
R901	Carbon film resistor	1M ohm	1/6W	±5%		200-105J-2C00-110
R902, 903, 904, 905	Carbon film resistor	220k ohm	1/6W	±5%		200-224J-2C00-110
R906, 907	Carbon film resistor	22k ohm	1/6W	±5%		200-223J-2C00-110
R913	Carbon film resistor	22 ohm	1/6W	±5%		200-220J-2C00-110
V901	PLL IC μPD1708AG-715				ETI-μPD1708AG-715	310-0293-0000
V902, 903	Transistor 2SC2603(F)				ETTC-2SC2603	302-0091-1201-006
V904, 905	Transistor 2SA1115(F)				ETTA-2SA1115	301-0033-1201-006
W901	Resistor array 33k ohm × 6				ECX-0065	370-0065-0100
	Flat cable				WX-0236	471-0236-0000

SWITCH CIRCUIT BOARD COMPONENT LOCATION GUIDE

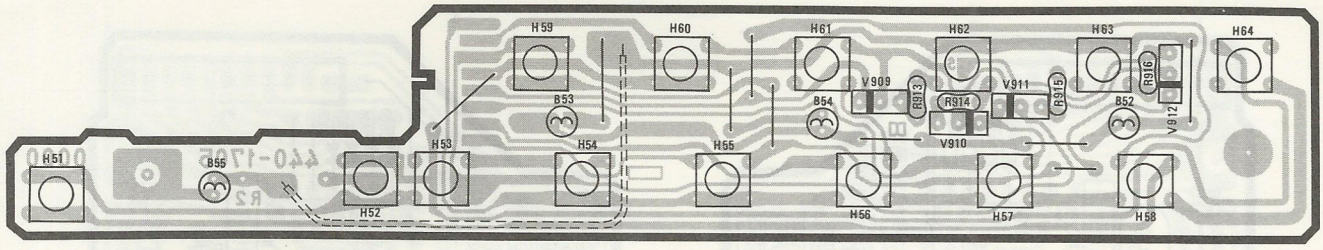

TOP VIEW

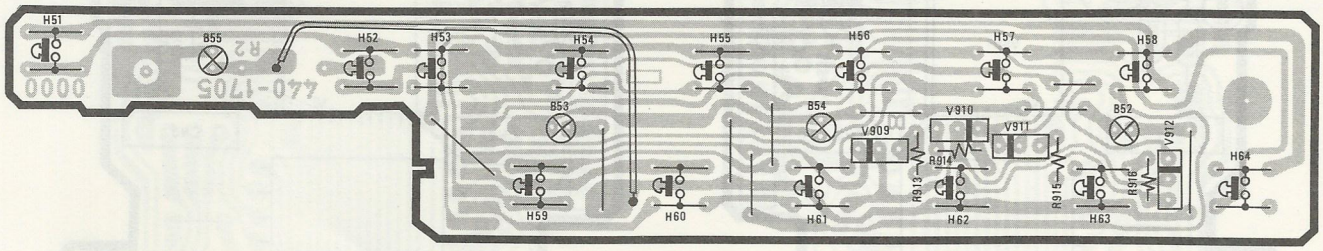

BOTTOM VIEW

REF. NO.7 CTP-1631 SWITCH CIRCUIT BOARD ASSEMBLY PARTS LIST

REF. NO.	DESCRIPTION	PART NO.	MFR'S NO.
–	Switch printed circuit board		440-1705-0000
B52, 53, 54, 55	Pilot lamp	EIL-0227	430-0227-0000
H51 - H64	Tact switch	ESS-0569	400-0569-1300
R913, 914, 915, 916	Carbon film resistor 220k ohm 1/6W ±5%		200-224J-2C00-010
V909, 910, 911, 912	Transistor 2SC2021(R)	ETTC-2SC2021	302-0047-1100

LAMP CIRCUIT BOARD COMPONENT LOCATION GUIDE

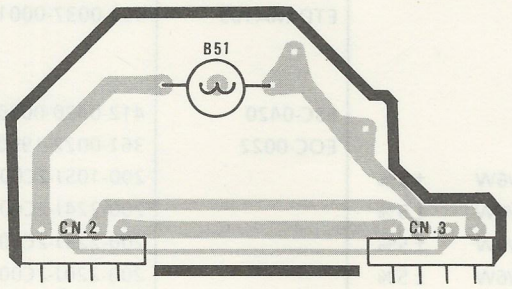

TOP VIEW

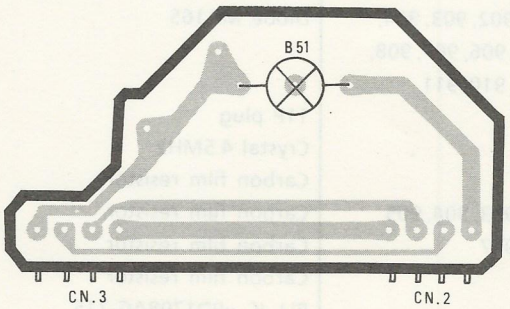

BOTTOM VIEW

REF. NO.8 CTP-1630 LAMP CIRCUIT BOARD ASSEMBLY PARTS LIST

REF. NO.	DESCRIPTION	PART NO.	MFR'S NO.
–	Lamp printed circuit board		440-1713-0500
B51	Pilot lamp	EIL-0226	430-0226-0000
CN2, 3	4P plug	ESP-0096	410-0096-0000

EXPLODED VIEW - MECHANISM

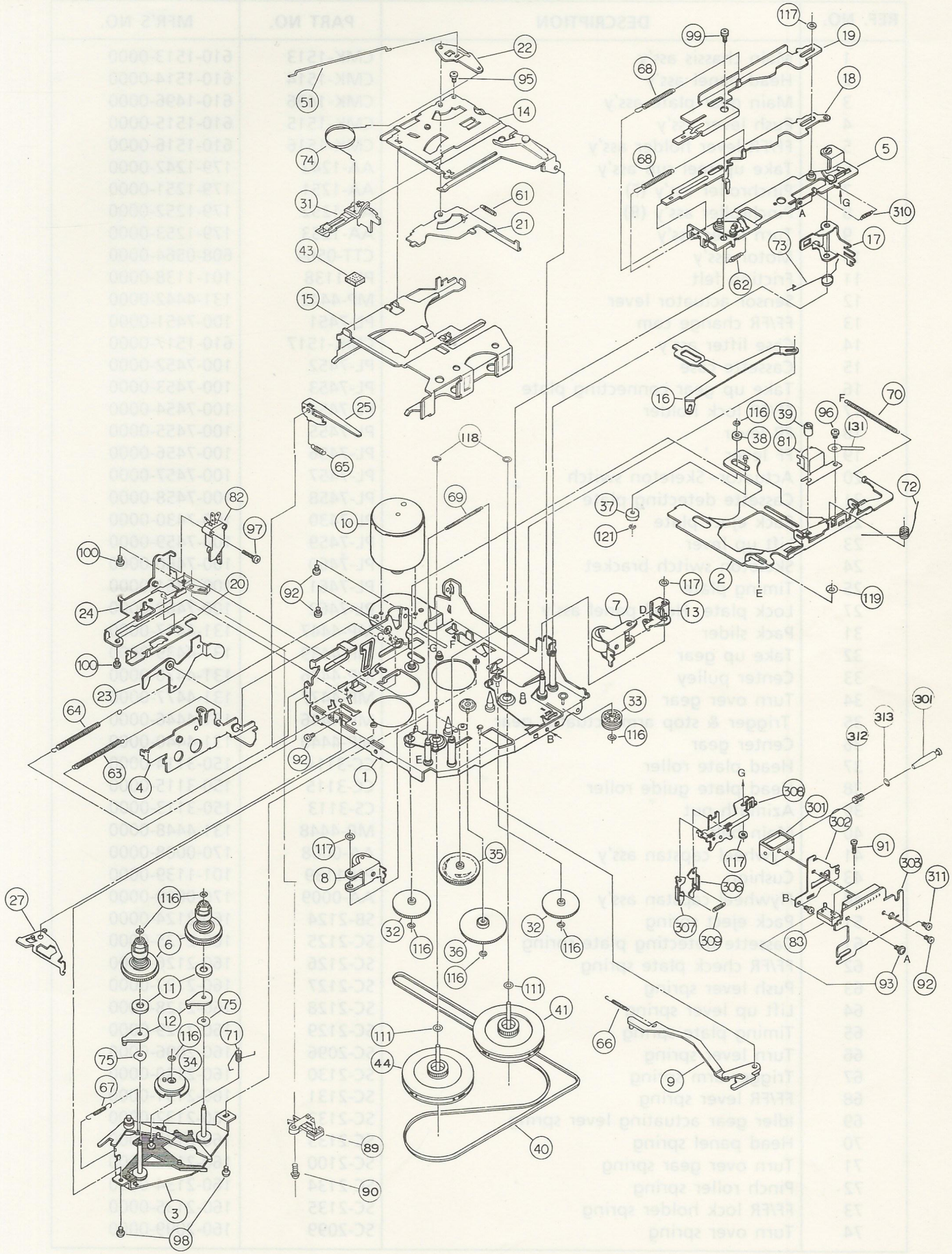

MECHANICAL PARTS LIST - MECHANISM

REF. NO.	DESCRIPTION	PART NO.	MFR'S NO.
1	Main chassis ass'y	CMK-1513	610-1513-0000
2	Head panel ass'y	CMK-1514	610-1514-0000
3	Main gear plate ass'y	CMK-1496	610-1496-0000
4	Push lever ass'y	CMK-1515	610-1515-0000
5	FF/FR lever holder ass'y	CMK-1516	610-1516-0000
6	Take up reel sub ass'y	AA-1242	179-1242-0000
7	Pinchroller ass'y (F)	AA-1251	179-1251-0000
8	Pinchroller ass'y (R)	AA-1252	179-1252-0000
9	Turn lever ass'y	AA-1253	179-1253-0000
10	Motor ass'y	CTT-0564	608-0564-0000
11	Friction felt	PN-1138	101-1138-0000
12	Sensor actuator lever	MP-4442	131-4442-0000
13	FF/FR change cam	PL-7451	100-7451-0000
14	Case lifter ass'y	CMK-1517	610-1517-0000
15	Cassette case	PL-7452	100-7452-0000
16	Take up gear connecting plate	PL-7453	100-7453-0000
17	FF/FR lock holder	PL-7454	100-7454-0000
18	FR lever	PL-7455	100-7455-0000
19	FF lever	PL-7456	100-7456-0000
20	Actuator - Skeleton switch	PL-7457	100-7457-0000
21	Cassette detecting plate	PL-7458	100-7458-0000
22	Pack eject plate	PL-7430	100-7430-0000
23	Lift up lever	PL-7459	100-7459-0000
24	Skeleton switch bracket	PL-7460	100-7460-0000
25	Timing plate	PL-7461	100-7461-0000
27	Lock plate - Head panel ass'y	PL-7462	100-7462-0000
31	Pack slider	MP-4447	131-4447-0000
32	Take up gear	MP-4439	131-4439-0000
33	Center pulley	MP-4476	131-4476-0000
34	Turn over gear	MP-4477	131-4477-0000
35	Trigger & stop arm actuator gear	MP-4446	131-4446-0000
36	Center gear	MP-4440	131-4440-0000
37	Head plate roller	CC-3114	150-3114-0000
38	Head plate guide roller	CC-3115	150-3115-0000
39	Azimuth nut	CS-3113	150-3113-0000
40	Main belt	MR-4448	131-4448-0000
41	Flywheel capstan ass'y	AA-0008	170-0008-0000
43	Cushion	PN-1139	101-1139-0000
44	Flywheel capstan ass'y	AA-0009	170-0009-0000
51	Pack eject spring	SB-2124	160-2124-0000
61	Cassette detecting plate spring	SC-2125	160-2125-0000
62	FF/FR check plate spring	SC-2126	160-2126-0000
63	Push lever spring	SC-2127	160-2127-0000
64	Lift up lever spring	SC-2128	160-2128-0000
65	Timing plate spring	SC-2129	160-2129-0000
66	Turn lever spring	SC-2096	160-2096-0000
67	Trigger arm spring	SC-2130	160-2130-0000
68	FF/FR lever spring	SC-2131	160-2131-0000
69	Idler gear actuating lever spring	SC-2132	160-2132-0000
70	Head panel spring	SC-2133	160-2133-0000
71	Turn over gear spring	SC-2100	160-2100-0000
72	Pinch roller spring	SC-2134	160-2134-0000
73	FF/FR lock holder spring	SC-2135	160-2135-0000
74	Turn over spring	SC-2099	160-2099-0000

REF. NO.	DESCRIPTION	PART NO.	MFR'S NO.
75	End detector spring washer	PL-7463	100-7463-0000
81	Head	AHP-0312	464-0312-0000
82	Skeleton switch	ESS-0572	400-0572-3000
83	Mute switch	ESS-0580	400-0580-3000
89	Switch - Mute	ESS-0571	400-0571-3200
90	Pan head screw 1.7 × 4.5 (Precision)	0061745	009-0018-0000
91	Pan head screw 1.7 × 5.5 (Precision)	0061755	009-0019-0000
92	Pan head screw 2 × 2.2 (Precision)	006222	000-0200-0220-122
93	Hat head screw 2 × 3 (Self tight)	097203ST	027-0200-0300-120
95	Pan head screw 2 × 4 (Precision Self tight)	006204ST	029-0009-0000
96	Bind head screw 2 × 4	091204	004-0200-0400-020
97	Bind head screw 2 × 8.5	091285	009-0016-0000
98	Bind head screw 2.6 × 3	006263	000-0260-0300-020
99	SEMS screw 2.6 × 4.5 (Precision)	0932645	059-0002-0000
100	Pan head screw 2 × 3	006203	000-0200-0300-020
111	Polyslider washer D2.1 × 0.25	PN-0531	101-0531-0000
116	Polyslider washer (Cut) D1.2 × 0.25	PN-1140	101-1140-0000
117	Polyslider washer (Cut) D2.1 × 0.5	PN-1141	101-1141-0000
118	Polyslider washer (Cut) D1.6 × 0.5	PN-1142	101-1142-0000
119	Polyslider washer (Cut) D2.6 × 0.5	PN-1153	101-1153-0000
121	E-ring D1.2	030123	080-0120-0300
131	Cord clamp	MC-1250	179-1250-0000
301	Solenoid - APS	ESR-0213	402-0213-3000
302	Solenoid support plate	PL-7464	100-7464-0000
303	Switch PC board ass'y	CTP-1636	600-1636-0000
306	Change lever (F)	PL-7465	100-7465-0000
307	Change lever (R)	PL-7466	100-7466-0000
308	Program change plate ass'y	CMK-1518	610-1518-0000
309	Change lever spring	SC-2136	160-2136-0000
310	Change lever support spring	SC-2137	160-2137-0000
311	Pan head screw 2 × 2 (Precision)	006202	000-0200-0200-122
312	Compression spring	SC-2138	160-2138-0000
313	Polyslider washer (Cut) D2.5 × 0.5	PN-1154	101-1154-0000

EXPLODED VIEW - CABINET

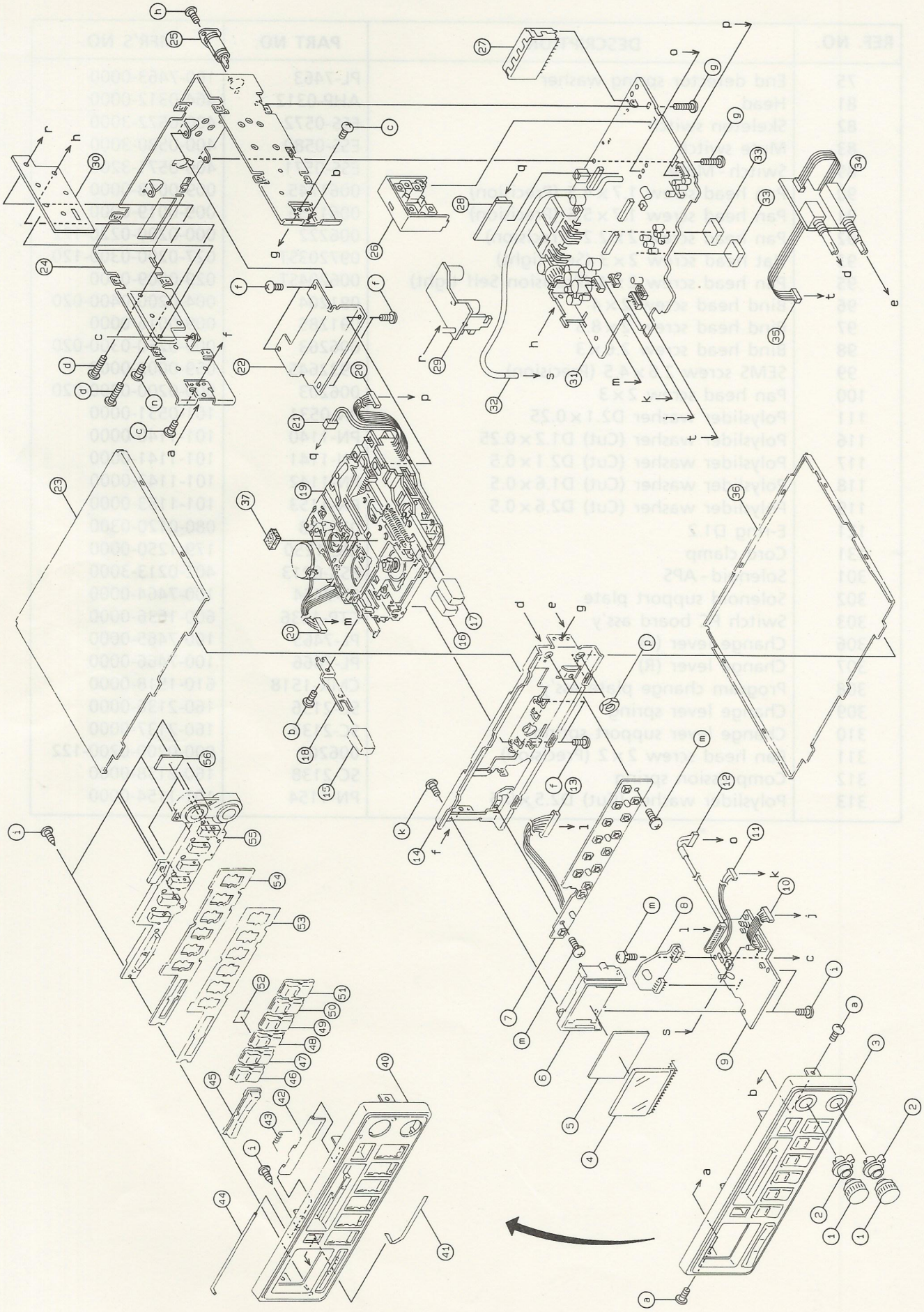

MECHANICAL PARTS LIST - CABINET

REF. NO.	DESCRIPTION	PART NO.	MFR'S NO.
1	Front knob (MCC-6630V)	MP-4422-1	131-4422-0001
1	Front knob (MCC-6630I)	MP-4422X1-1	131-4422-0101
2	Rear knob (MCC-6630V)	MP-4423	131-4423-0000
2	Rear knob (MCC-6630I)	MP-4423X1	131-4423-0100
3	Escutcheon ass'y (MCC-6630V)	CMM-0560-1	613-0560-0001
3	Escutcheon ass'y (MCC-6630I)	CMM-0566	613-0566-0000
4	LCD panel	EIX-0021	333-0021-0000
5	Reflection plate - LCD	PN-1579	181-1579-0000
6	Light guide - LCD	MP-4418-1	131-4418-0001
7	Switch PC board ass'y	CTP-1631	600-1631-0000
8	Lamp PC board ass'y	CTP-1630	600-1630-0000
9	LCD display PC board ass'y	CTP-1629	600-1629-0000
10	7P socket with wires	AH-0344	421-0344-0000
11	4P socket with wires	AH-0201	421-0201-0000
12	3P board-in connector	AH-0239	421-0239-0000
13	11P socket with wires	AH-0328	421-0328-0000
14	Front chassis	PL-7398	100-7398-0000
15	Button - Eject (MCC-6630V)	MP-4419X3	131-4419-0300
15	Button - Eject (MCC-6630I)	MP-4419X6	131-4419-0600
16	Button - FR (MCC-6630V)	MP-4419X4	131-4419-0400
16	Button - FR (MCC-6630I)	MP-4419X7	131-4419-0700
17	Button - FF (MCC-6630V)	MP-4419X5	131-4419-0500
17	Button - FF (MCC-6630I)	MP-4419X8	131-4419-0800
18	Eject lever	PL-7403	100-7403-0000
19	Autoreverse cassette mechanism	S-28	626-0011-0000
20	6P socket with wires	AH-0327	421-0327-0000
21	2P socket with wires	AH-0342	421-0342-0000
22	Holder - Mechanism	PL-7402-1	100-7402-0001
23	Top lid	PL-7400	100-7400-0000
24	Side chassis	PL-7399-2	100-7399-0002
25	Aerial socket	ESJ-0308	411-0308-0000
26	AM tuner	AR-0219	625-0219-0000
27	FM tuner	AR-0209	625-0209-0000
28	APS PC board ass'y	CTP-1633	600-1633-0000
29	Power amplifier PC board ass'y	CAP-1632-1	600-1632-0001
30	Heatsink plate	PL-7419	100-7419-0000
31	Main PC board ass'y	CTP-1627	600-1627-0000
32	1P socket with wire	AH-0343	421-0343-0000
33	Cushion rubber	PN-1132	101-1132-0000
34	Volume control PC board ass'y	CAP-1628	600-1628-0000
35	4P socket with wires	AH-0345	421-0345-0000
36	Bottom lid	PL-7401	100-7401-0000
37	Cushion	PN-1156	101-1156-0000
40	Escutcheon (MCC-6630V)	MP-4416X2	131-4416-0200
40	Escutcheon (MCC-6630I)	MP-4416X4	131-4416-0400
41	Electrostatic eraser	HPP-1719	800-1719-0000
42	Cassette door (MCC-6630V)	PL-7397X8	100-7397-0800
42	Cassette door (MCC-6630I)	PL-7397X4	100-7397-0400
43	Door spring	SC-2835	160-2835-0000
44	Door shaft	CC-3069	150-3069-0000
45	Button - TUNE (MCC-6630V)	MP-4421-1	131-4421-0001
45	Button - TUNE (MCC-6630I)	MP-4421X1-1	131-4421-0101
46	Button - TIME FREQ (MCC-6630V)	MP-4420-1	131-4420-0001

REF. NO.	DESCRIPTION	PART NO.	MFR'S NO.
46	Button - TIME FREQ (MCC-6630I)	MP-4420X9-1	131-4420-0901
47	Button - ME (MCC-6630V)	MP-4420X1-1	131-4420-0101
47	Button - ME (MCC-6630I)	MP-4420X10-1	131-4420-1001
48	Button - LX MTL (MCC-6630V)	MP-4420X5-1	131-4420-0501
48	Button - LX MTL (MCC-6630I)	MP-4420X14-1	131-4420-1401
49	Button - ASM ◻◻ (MCC-6630V)	MP-4420X6-1	131-4420-0601
49	Button - ASM ◻◻ (MCC-6630I)	MP-4420X15-1	131-4420-1501
50	Button - SEEK APS (MCC-6630V)	MP-4420X7-1	131-4420-0701
50	Button - SEEK APS (MCC-6630I)	MP-4420X16-1	131-4420-1601
51	Button - AM FM (MCC-6630V)	MP-4420X8-1	131-4420-0801
51	Button - AM FM (MCC-6630I)	MP-4420X17-1	131-4420-1701
52	Shading label	HPP-1830	800-1830-0000
53	Shading piece	PN-1131X2	101-1131-0200
54	Cushion	PN-1131X1	101-1131-0100
55	Light guide - Button	MP-4417X1-1	131-4417-0101
56	Reflection plate - Button	HPP-1827	800-1827-0000
a	Pan head screw 2.6 × 3	006263	000-0260-0300-021
b	Pan head screw 2.6 × 2.5	0062625	000-0260-0250-020
c	Pan head screw 2.6 × 5	006265	000-0260-0500-021
d	Pan head screw 2.6 × 10	0062610	000-0260-1000-021
f	Pan head screw 3 × 4	006304	000-0300-0400-020
g	Pan head screw 2.6 × 5 (Self tight)	006265ST	020-0260-0500-120
h	Pan head screw 2.6 × 5 (Self tight)	006265ST	020-0260-0500-121
i	Pan head screw 2 × 5 (P tight)	006205PT	020-0200-0500-421
k	Pan head screw 2.6 × 6 (P tight)	006266PT	020-0260-0600-421
m	SEMS screw 2.6 × 5	093265	050-0260-0500-121
n	Pan head tapping screw 3 × 6	080306	010-0300-0600-221
p	Hexagon nut D6	020602	064-0600-0100

ACCESSORY LIST

DESCRIPTION	Q'TY	PART NO.	MFR'S PART NO.
Instruction book	1	HPB-1183	801-1183-0000
Dealer list (MCC-6630I)	1	HPC-0209-4	803-0209-0004
Warranty card (MCC-6630I)	1	HPC-0526	803-0526-0000
Pan head screw 3 × 5	6	006305	000-0300-0500-021

SCHEMATIC DIAGRAM

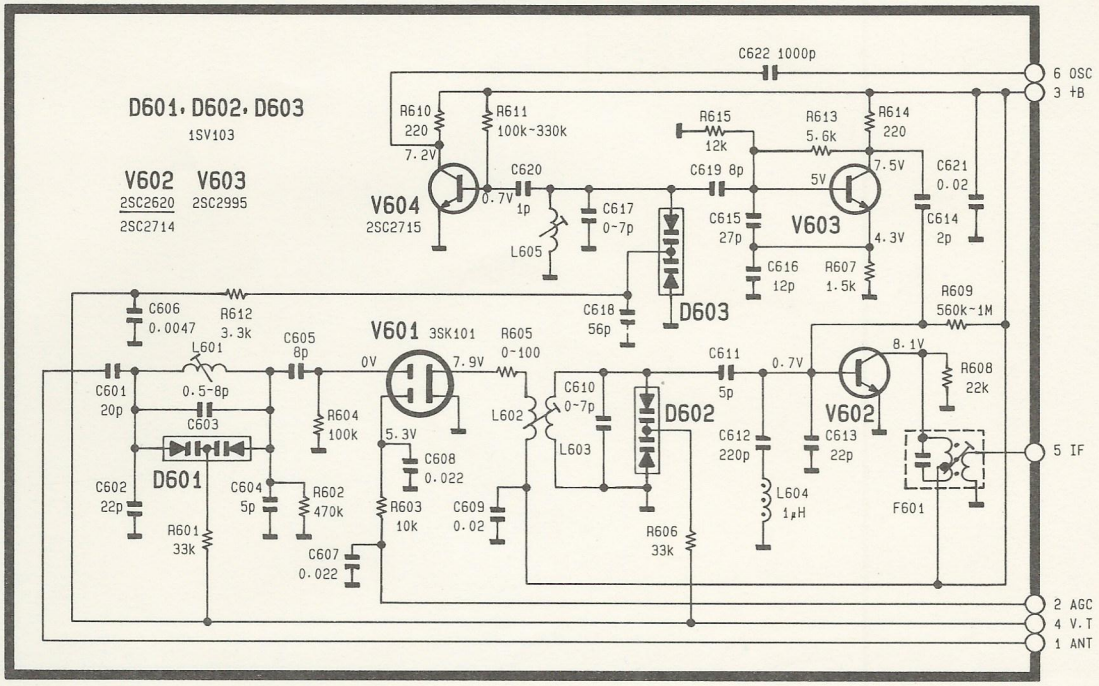

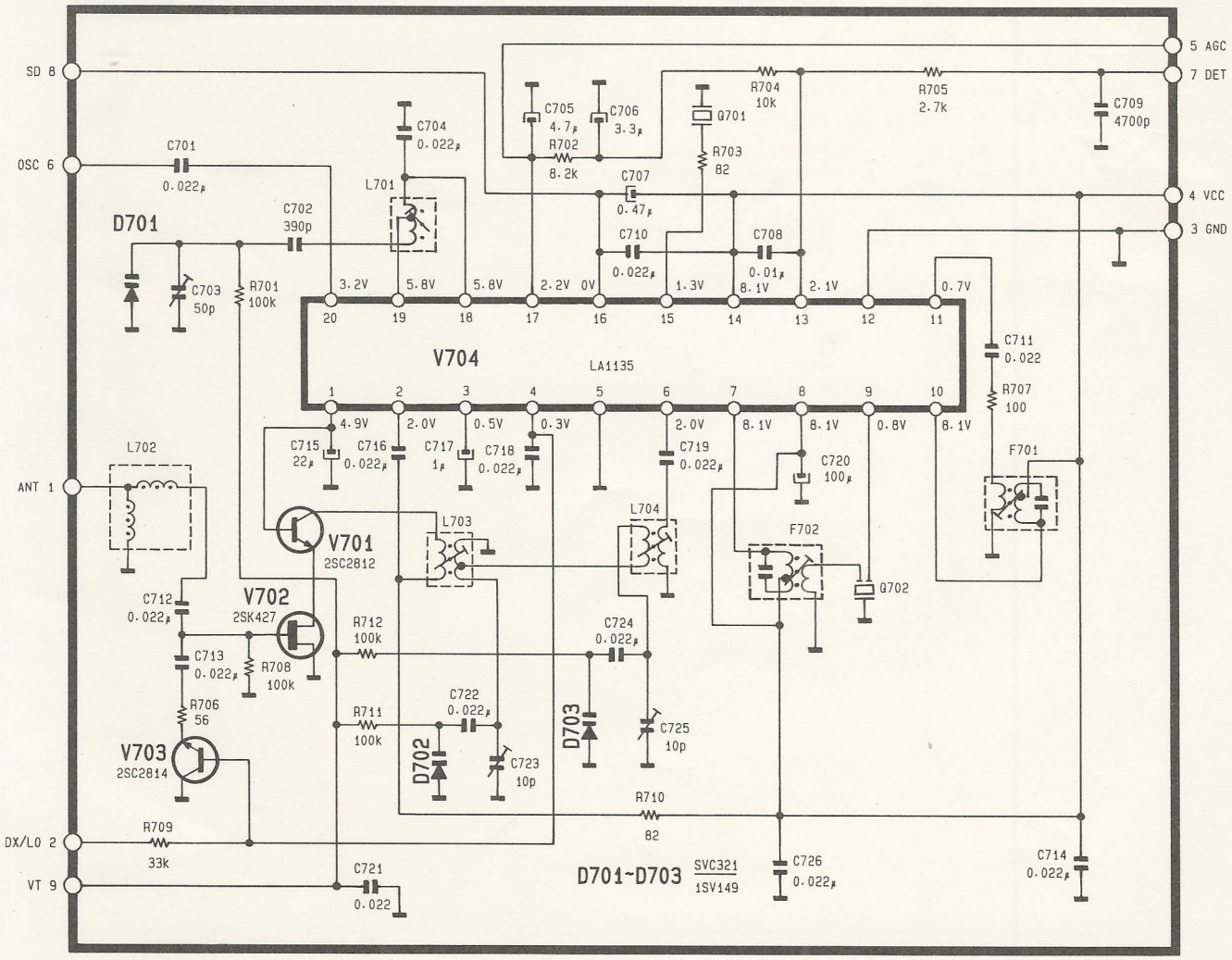

SCHEMATIC DIAGRAM

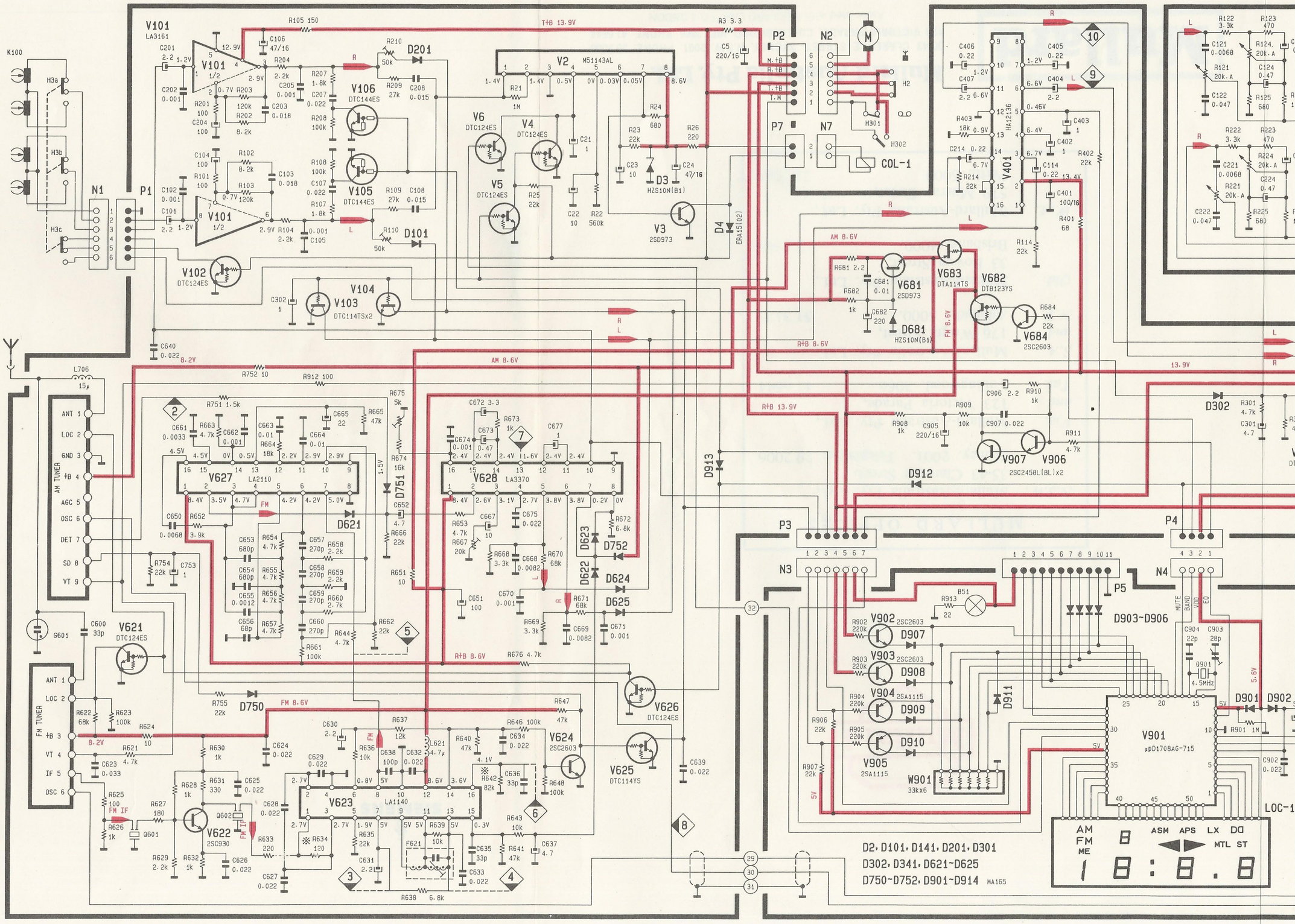

SCHEMATIC DIAGRAM

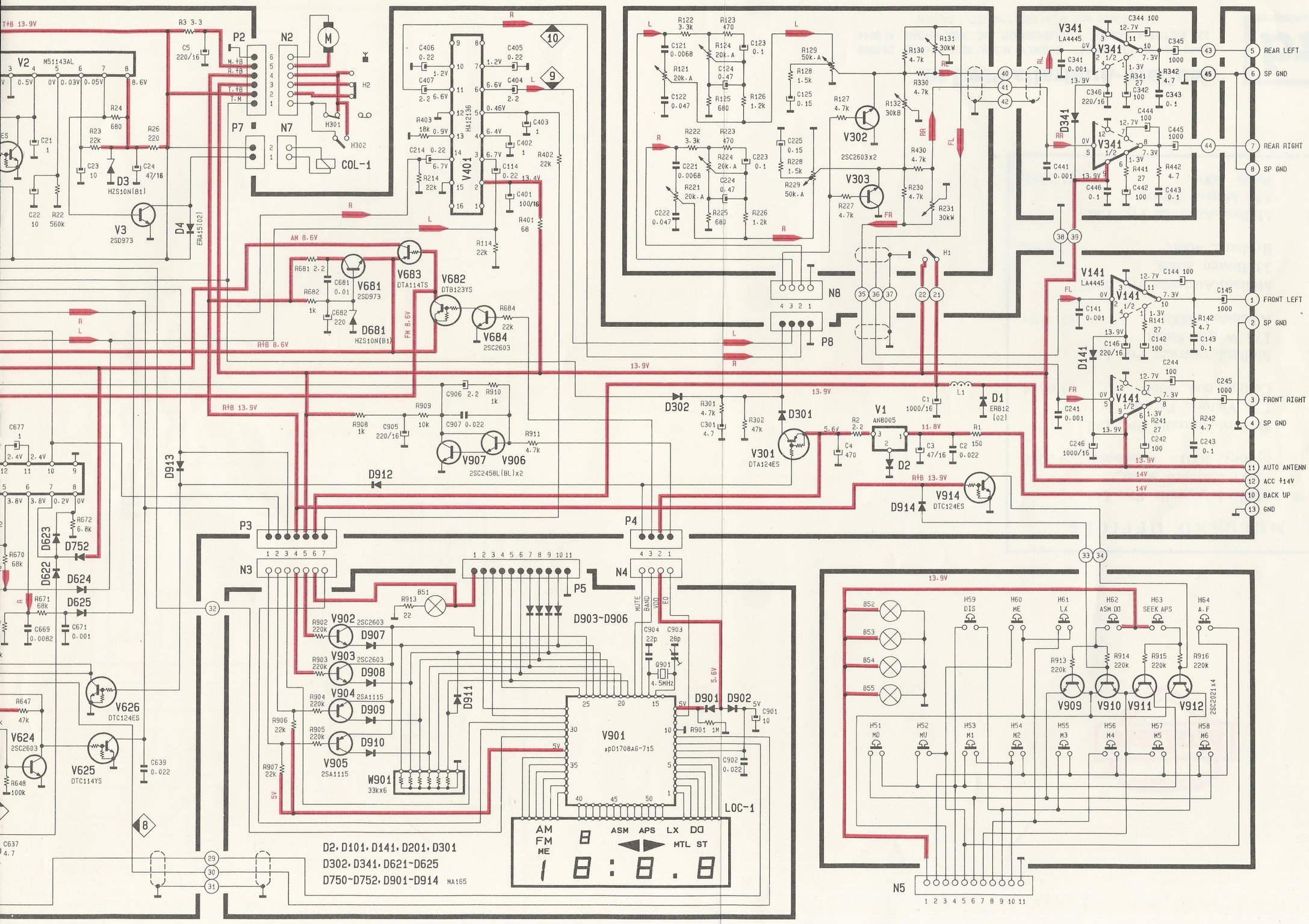

* LOCATION OF CODE MATRIX DIODES

~~PLACE~~ REMOVE BOTH DIODE PAK'S

+ REPLACE WITH SINGLE DIODE AS PER DIAG.!!

AMP PCB