INCLUDES LAYOUT OF PCB
FOR MECHANISM CONTROL
CIRCUIT BOARD
AND
P/NOS. OF VARIOUS
MOTOR PULLIES.

eurovox

and circuit & layout of satellite
1-transistor P.C.B.

SERVICE MANUAL

Computerised Logic System

AUTOREVERSE CASSETTE STEREO PLAYER with Dolby NR & ELECTRONIC SEEK TUNE AM FM STEREO RADIO with 12 Programmable Memories & Digital Display

MCC-2301R

FOR ADDITIONAL TECHNICAL DESCRIPTION, REFER TO THE SERVICE MANUAL FOR MCC-2201R.

Printed in Japan Dec. '84 Modification Reserved

LOCATION OF CONTROLS

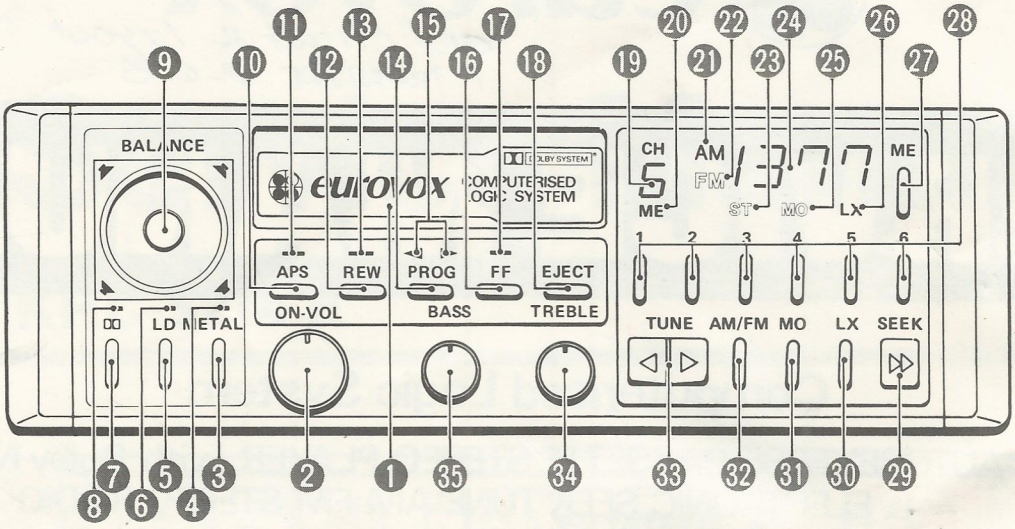

1. Cassette Door (Slot)
2. Volume Control/Radio On-Off Switch
3. Tape Selection Switch
4. Tape Selector (METAL) Indicator
5. Loudness Contour Switch
6. Loudness Indicator
7. Dolby Noise Reduction Switch
8. Dolby NR Indicator
9. Joystick Balance Control
10. Automatic Program Selection Switch
11. Automatic Program Selection (APS) Indicator
12. Fast Rewind Switch
13. Fast Rewind Indicator
14. Program Selector Switch
15. Program Indicator
16. Fast Forward Switch
17. Fast Forward Indicator
18. Manual Cassette Ejection Switch
19. Digital Channel Number Indicator
20. Memory Enable (ME) Indicator
21. AM Indicator
22. FM Indicator
23. FM Stereo (ST) Indicator
24. Digital Frequency Readout
25. FM Mono (MO) Indicator
26. Local (LX) Indicator
27. Memory Enable Switch
28. Memory Address Switches
29. Automatic Seek Tuning Switch
30. Local/Distant Selector Switch
31. FM Stereo/Mono Selector
32. Waveband Selector Switch
33. Manual Tuning Switch
34. Treble Control
35. Bass Control

Ref. No. 22 CRP-147 FM CIRCUIT BOARD PARTS LIST

REF. NO.	DESCRIPTION				PART NO.
—	FM printed circuit board				EP-874
C601, 602, 603, 604, 606, 609, 610	Ceramic capacitor	0.047 μF	25V	ZF	ECC
C605	Electrolytic capacitor	1 μF	10V		ECC
C607, 612, 613	Ceramic capacitor	33pF	10V	SL	ECC
C608, 631	Electrolytic capacitor	100 μF	10V		ECC
C611	Electrolytic capacitor	22 μF	10V		ECC
C614, 645, 646	Ceramic capacitor	100pF	10V	SL	ECC
C615, 636	Electrolytic capacitor	10 μF	10V		ECC
C616, 617, 618, 619	Ceramic capacitor	330pF	10V	SL	ECC
C620	Ceramic capacitor	5pF	10V	SL	ECC
C621, 623	Ceramic capacitor	680pF	10V	SL	ECC
C622	Ceramic capacitor	68pF	10V	SL	ECC
C624	Ceramic capacitor	0.0012 μF	10V	YB	ECC
C625	Monolithic capacitor	0.0047 μF	10V	±20%	ECC
C626	Monolithic capacitor	0.015 μF	10V	±10%	ECC
C627	Tantalum electrolytic capacitor	0.22 μF	10V		ECC
C628	Monolithic capacitor	0.0022 μF	10V	±20%	ECC
C629	Monolithic capacitor	0.01 μF	10V	±20%	ECC
C630, 638, 641, 642	Electrolytic capacitor	4.7 μF	10V		ECC
C632	Polypropylene film capacitor	0.001 μF	10V	±5%	ECC
C633	Tantalum electrolytic capacitor	3.3 μF	10V		ECC
C634, 635	Tantalum electrolytic capacitor	1 μF	10V		ECC
C637	Monolithic capacitor	0.022 μF	10V	±20%	ECC
C639, 640	Monolithic capacitor	0.022 μF	10V	±10%	ECC
C643, 644	Monolithic capacitor	0.0015 μF	10V	±10%	ECC
CF601, 602	Ceramic filter	10.7 MHz			EOP-10C
D601, 602, 603, 604, 605	Diode 1SS133 or equivalent				ETD
IC601	FM IF IC LA1140				ETI-83
IC602	NB IC HA11219				ETI-73
IC603	MPX IC LA3370				ETI-84
L601	Choke coil				ELD-178
Q601	Transistor 2SC930(D) or equivalent				ETTC
Q602, 603	Transistor 2SC2458L (BL) or equivalent				ETTC
R601, 603	Carbon film resistor	1.8K ohm	1/4W	±5%	ECR
R602	Carbon film resistor	100 ohm	1/4W	±5%	ECR
R605	Carbon film resistor	220 ohm	1/4W	±5%	ECR
R606	Carbon film resistor	150K ohm	1/4W	±5%	ECR
R607, 636, 640	Carbon film resistor	1K ohm	1/4W	±5%	ECR
R609, 635	Carbon film resistor	15K ohm	1/4W	±5%	ECR
R610, 615, 641	Carbon film resistor	10K ohm	1/4W	±5%	ECR
R611	Carbon film resistor	12K ohm	1/4W	±5%	ECR
R612, 620	Carbon film resistor	68K ohm	1/4W	±5%	ECR
R613, 618	Carbon film resistor	6.8 ohm	1/4W	±5%	ECR
R614, 617, 621, 628, 629, 630	Carbon film resistor	4.7K ohm	1/4W	±5%	ECR
R616, 619, 626	Carbon film resistor	100K ohm	1/4W	±5%	ECR
R622, 623	Carbon film resistor	2K ohm	1/4W	±5%	ECR
R624, 653, 654	Carbon film resistor	2.7K ohm	1/4W	±5%	ECR
R625	Carbon film resistor	22K ohm	1/4W	±5%	ECR
R627	Carbon film resistor	430K ohm	1/4W	±5%	ECR
R631	Carbon film resistor	5.6K ohm	1/4W	±5%	ECR
R632	Carbon film resistor	8.2K ohm	1/4W	±5%	ECR
R633	Carbon film resistor	390 ohm	1/4W	±5%	ECR
R634, 645	Carbon film resistor	6.8K ohm	1/4W	±5%	ECR
R637	Carbon film resistor	2.2K ohm	1/4W	±5%	ECR
R638	Carbon film resistor	10 ohm	1/4W	±5%	ECR
R639	Carbon film resistor	16K ohm	1/4W	±5%	ECR
R642	Carbon film resistor	330 ohm	1/4W	±5%	ECR
R643, 644	Carbon film resistor	3.3K ohm	1/4W	±5%	ECR
R646, 649, 650, 655	Carbon film resistor	33K ohm	1/4W	±5%	ECR
R647, 648	Carbon film resistor	470K ohm	1/4W	±5%	ECR
R651, 652	Carbon film resistor	1.5K ohm	1/4W	±5%	ECR
T601	Detector tank coil				ELD-179
VR601	Trimmer resistor	300 ohm B			ECRV-271D
VR602	Trimmer resistor	20K ohm B			ECRV-240D
VR603	Trimmer resistor	5K ohm B			ECRV-260D
VR604	Trimmer resistor	10K ohm B			ECRV-261D
—	P.C.B. Holder				PP-523

This CRP-147 is only applicable to the limited quantity of the units with the Serial Numbers up to 140000550 (GMH)

GENERAL INFORMATION

SEMICONDUCTORS: 21 ICs, 3 FETs, 57 Transistors, 62 Diodes, 2 LEDs

DESCRIPTION	REF. NO.	Q'TY	EQUIVALENT
(AM RADIO)			
AM IC LA1135	IC801	1	
Radio frequency amplifier FET 2SK163(M)	Q803	1	2SK523(M)
Switching transistor 2SC2814(F4)	Q801, 802, 804	3	2SC2716(O), 2SC2619(B)
Varactor diode SVC321SP	D801, 802, 803	3	1SV149
Antenna noise limiter diode EQA02-09(SA)	D723, 724	2	MZ309, RD10E(B1), HZ9(C2)
(FM RADIO)			
IF IC LA1140	IC601	1	
NB IC LA2110	IC602	1	
MPX IC LA3376	IC603	1	
IF amplifier transistor 2SC930(D)	Q601	1	2SC2787(K) or (L)
Audio amplifier and filter 2SC2458L (BL)	Q602, 603	2	2SC1815(BL), 2SC2784(K) or (E) 2SC2458(BL)
Radio frequency amplifier FET 3SK101 (GR)	Q501	1	
Mixer transistor 2SC2714(R)	Q502	1	2SC2714(O) or (Y)
Oscillator FET 2SK210(Y)	Q503	1	2SK210(GR) or (BL), 2SK197(C) or (D)
Oscillator buffer transistor 2SC2714(R)	Q504	1	2SC2714(O) or (Y)
Varactor diode 1SV103	D501, 502, 503	3	
Switching diode 1SS133	D601, 604, 605	3	1S1588, 1S2076, MA165, GMA-01
Voltage shift diode 1SS133	D602, 603	2	1S1588, 1S2076, MA165, GMA-01
Switching transistor 2SC2458L(BL)	Q604	1	2SC1815(BL), 2SC2784(K) or (E), 2SC2458(BL)
(PLL Control)			
Prescaler IC μPB553AC	IC701	1	
LED driver M 54517P	IC702, 705	2	
PLL LSI and controller μPD1710G-016	IC703	1	
LED driver M54562P	IC704	1	
Regulator IC μPC78L05	IC706	1	
Switching transistor, LOC/DX, Mute 2SC2603(E) or (F)	Q701, 709	2	2SC2785(E) or (F), 2SC536(F) or (G), 2SC1740S(Q) or (R)
Switching transistor, LOC/DX 2SC930(D)	Q702	1	2SC2787(K) or (L)
OSC buffer amplifier transistor (AM, FM) 2SC930(D)	Q703, 704	2	2SC2787(K) or (L)
Low pass filter transistor 2SC2603(E) or (F)	Q705, 706	2	2SC2785(E) or (F), 2SC536(F) or (G), 2SC1740S(Q) or (R)
Voltage regulator transistor 2SC 2603(E) or (F)	Q707	1	2SC2785(E) or (F), 2SC536(F) or (G), 2SC1740S(Q) or (R)
LED driver (CH) 2SC2603(E) or (F)	Q714	1	2SC2785(E) or (F), 2SC536(F) or (G), 2SC1740S(Q) or (R)
Switching diode 1SS133	D701, 702, 705, 706, 709, 712, 713, 714, 715, 716, 717, 718, 719, 720	14	1S1588, 1S2076, MA165, GMA-01
Zener diode EQA02-09(SA)	D704	1	MZ309, RD10E(B1), HZ9(C2)
Zener diode HZ6(C3)	D707	1	EQA02-06(AB), MA306(A), HZ6(A3)
Protector diode DS135(D)	D722	1	ERB12(02)
(Dimmer control)			
Dimmer control transistor 2SC2603(E) or (F)	Q711, 712, 713	3	2SC2785(E) or (F), 2SC536(F) or (G), 2SC1740S(Q) or (R)
Dimmer control transistor 2SC1162(C)	Q710	1	
Zener diode RD5.1E(B2)	D721	1	MTZ5.1(B), EQA02-05(EF)
(Regulator and mute)			
Switching transistor 2SA1115(E) or (F)	Q302	1	2SA1175(E) or (H), 2SA933S(Q) or (R)
Regulator transistor 2SD400(F)	Q303	1	
Regulator transistor 2SC2458L(BL)	Q305	1	2SC1815(BL), 2SC2784(K) or (E), 2SC2458(BL)
Switching transistor 2SC2603(E) or (F)	Q304, 306	2	2SC2785(E) or (F), 2SC536(F) or (G), 2SC1740S(Q) or (R)
Switching diode 1SS133	D304, 311	2	1S1588, 1S2076, MA165, GMA-01
Zener diode EQA02-09(SA)	D307, 308	2	MZ309, RD10E(B1), HZ9(C2)

DESCRIPTION	REF. NO	Q'TY	EQUIVALENT
(Search stop and AM auto hi-cut)			
Switching transistor 2SA1115(E) or (F)	Q307	1	2SA1175(E) or (H), 2SA933S(Q) or (R)
Switching transistor 2SC2603(E) or (F)	Q308, 309	2	2SC2785(E) or (F), 2SC536(F) or (G), 2SC1740S(Q) or (R)
Band pass filter and amplifier transistor 2SC2458L(BL)	Q311	1	2SC1815(BL), 2SC2784(K) or (E), 2SC2458(BL)
Zener diode RD5.1E(B2)	D309	1	MTZ5.1(B), EQA02-05(EF)
Switching diode 1SS133	D310, 312, 313, 315	4	1S1588, 1S2076, MA165, GMA-01
(Audio)			
Pre amplifier IC M51522L	IC151	1	
Cassette program selection IC M51143AL	IC152	1	
Analogue switch IC μPD4066BP	IC153	1	HFE4066BP, TC4066BP, HD14066BP
Power amplifier IC HA13001	IC154, 452	2	
Switching transistor 2SC2603(E) or (F)	Q101, 154, 156, 201	4	2SC2785(E) or (F), 2SC536(F) or (G), 2SC1740S(Q) or (R)
Flat amplifier transistor 2SC2458L(BL)	Q103, 203	2	2SC1815(BL), 2SC2784(K) or (E), 2SC2458(BL)
Regulator transistor 2SC2458L(BL)	Q153	1	2SC1815(BL), 2SC2784(K) or (E), 2SC2458(BL)
Switching transistor 2SB1099(L)	Q155	1	2SB601(L) or (M)
Muting transistor 2SD1021(E) or (F)	Q102, 202	2	
Switching diode 1SS133	D101, 102, 151, 154, 155, 201, 202	7	1S1588, 1S2076, MA165, GMA-01
Zener diode HZ6 (C3)	D152	1	
Protector diode DS135(D)	D153, 156	1	ERB12(02)
(Mechanism control)			
Hall IC DN6835	IC1, 2	2	
Mechanism control IC LM6416-433	IC3	1	
Regulator IC μPC78L05	IC5	1	
Transistor array M54517P	IC4	1	
Motor drive transistor 2SC2603(E) or (F)	Q1, 7	2	2SC2785(E) or (F), 2SC536(F) or (G), 2SC1740S(Q) or (R)
Motor drive transistor 2SA1115(E) or (F)	Q2, 8	2	2SA1175(E) or (H), 2SA933S(Q) or (R)
Motor drive transistor 2SB822(R) or (Q)	Q3, 5	2	2SA881(Q) or (R)
Motor drive transistor 2SC2673(Q) or (P)	Q4, 6	2	2SD973(R) or (S)
Switching transistor 2SB822(R) or (Q)	Q13	1	2SA881(Q) or (R)
Solenoid drive transistor 2SC2673(Q) or (P)	Q9, 10, 11	3	2SD973(R) or (S)
Switching transistor 2SC2603(E) or (F)	Q12, 14	2	2SC2785(E) or (F), 2SC536(F) or (G), 2SC1740S(Q) or (R)
Switching transistor 2SA1115(E) or (F)	Q51	1	2SA1175(E) or (H), 2SA933S(Q) or (R)
Arc suppresser diode DS135(D)	D1, 2, 5, 6,	4	ERB12(02)
Switching diode 1SS133	D3, 9, 10, 11, 51	5	1S1588, 1S2076, MA165, GMA-01
Zener diode HZ3(A1)	D4	1	MTZ5.1(B), EQA02-05(EF)
Switching diode DS135(D)	D7, 8	2	ERB12(02)
(Dolby NR)			
Dolby NR IC HA12046	IC451	1	
Regulator transistor 2SC2458L(BL)	Q401	1	2SC1815(BL), 2SC2784(K) or (E), 2SC24[illegible]
(Displays)			
LED Display with switches	DISP-1	1	
LED Display with switches	DISP-2	1	

INPUT & OUTPUT

Indication	For Connection of:	Sensitivity	Impedance	Type of Socket	Connections
Antenna receptacle	Car radio aerial	1μV-3V	75 ohm	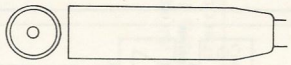	Aerial
7P DIN socket (only for EUROVOX version)	Power amplifier unit	1. 2V 2. 0V 3. 2V 4. 2V 5. 2V 6. 0V 7. 14V DC	1. 600 ohm 2. - 3. 600 ohm 4. 600 ohm 5. 600 ohm 6. - 7. -	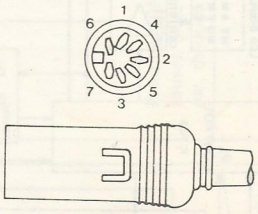	1. Left Front 2. Ground 3. Left Rear 4. Right Front 5. Right Rear 6. Ground 7. Power switching voltage output (+
4P plug, 6P plug or 10P plug	Output Speaker Left CH and Right CH	2. 7.5W 3. 7.5W 4. 7.5W 5. 7.5W	4 ohm	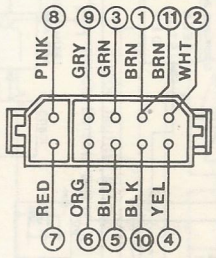	1. Speaker GND, Fr 2. Front Right Speak 3. Front Left Speake 4. Rear Right Speak 5. Rear Left Speaker 11. Speaker GND, Re
	Small light switch	–	–		6. Back light
	Power supply +14V (Ignition switch)	–	–	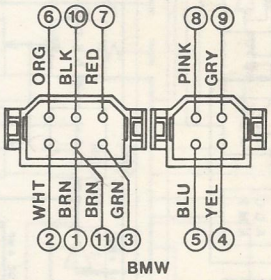	7. +14V DC
	Power supply +14V (Car battery)	–	–		8. Car battery +14V DC
	Automatic aerial	14V DC (Max. 500mA)	–	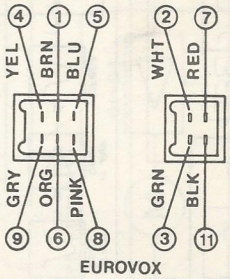	9. Automatic aerial

CIRCUIT FUNCTION DIAGRAM

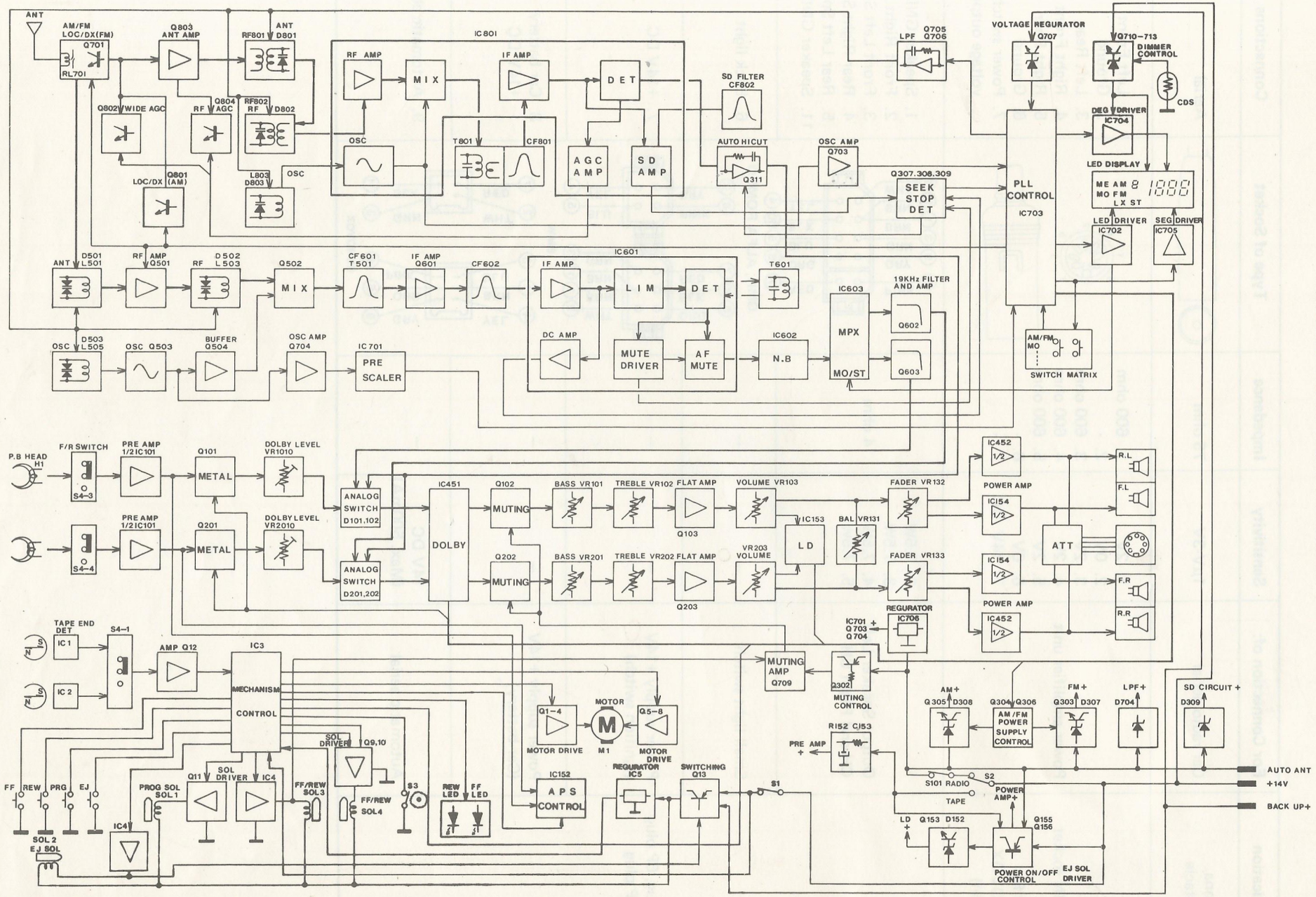

SIMPLIFIED CIRCUIT DIAGRAM FOR CASSETTE SECTION

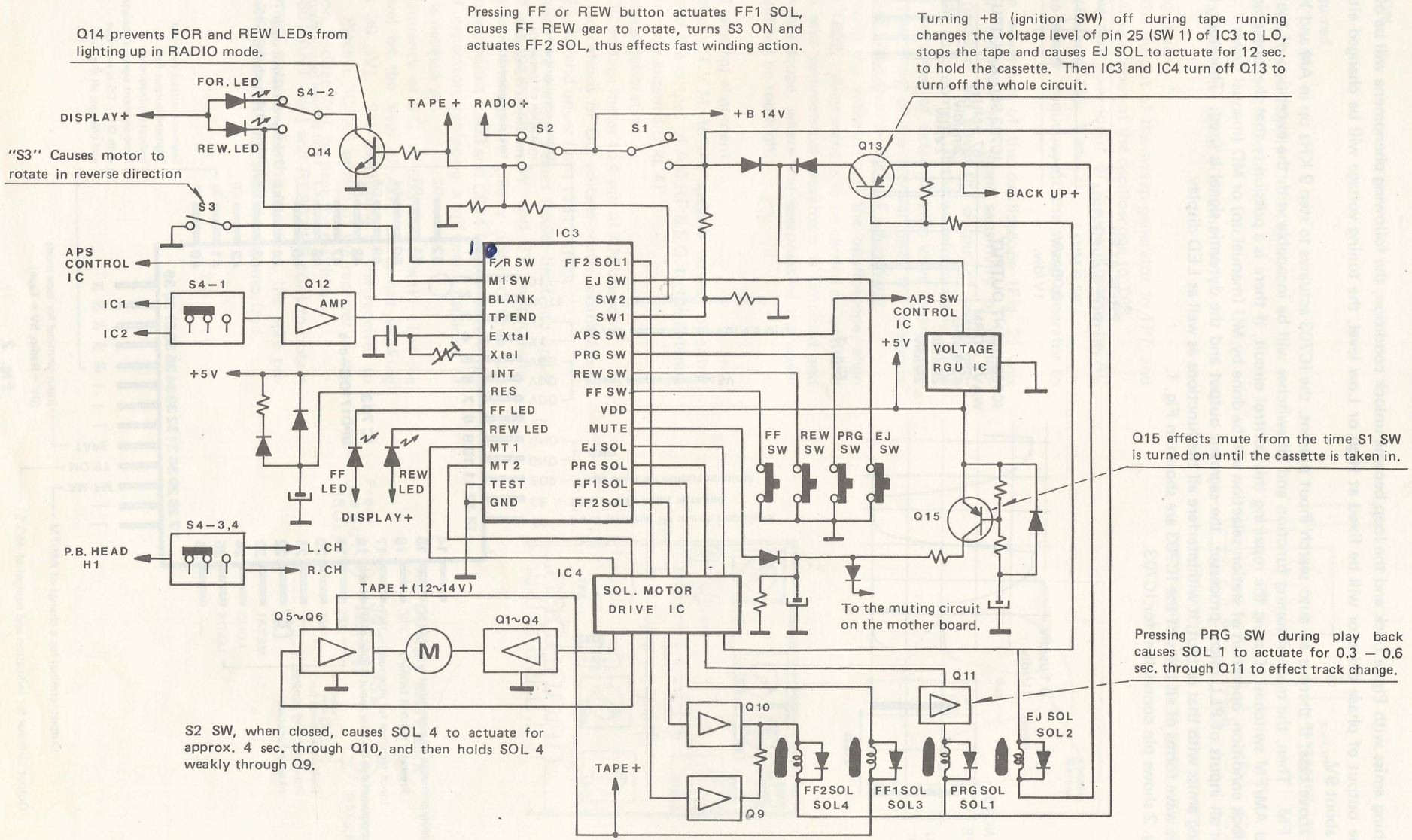

CONTROL CIRCUIT

If something amiss with Phase Lock and the loop became unlock condition, the following phenomena will be observed.

(1) The output of phase detector will be fixed at High or Low level, the tuning voltage will be changed either 0V or about 9V.

(2) In above case, if there is an auto search input present, the IC703 actuates to step 9 KHz up in AM and 100 KHz in FM. Then, the manual tuning function and all switches will be incapable with the exception of the power and AM/FM switches. During the repairing this control circuit, if there is a possibility that the loop going to be unlock condition, operation of station selection will be done by MU (manual up) or MD (manual down).
For all inputs of PLL micro processor, the segment output and the dynamic signal is used. Therefore, if something amiss with that output, it will interfere all the functions as well as LED display.
The wave forms of all parts of the IC703 are shown in Fig. 1.
Fig. 2 shows pin connection for IC703.

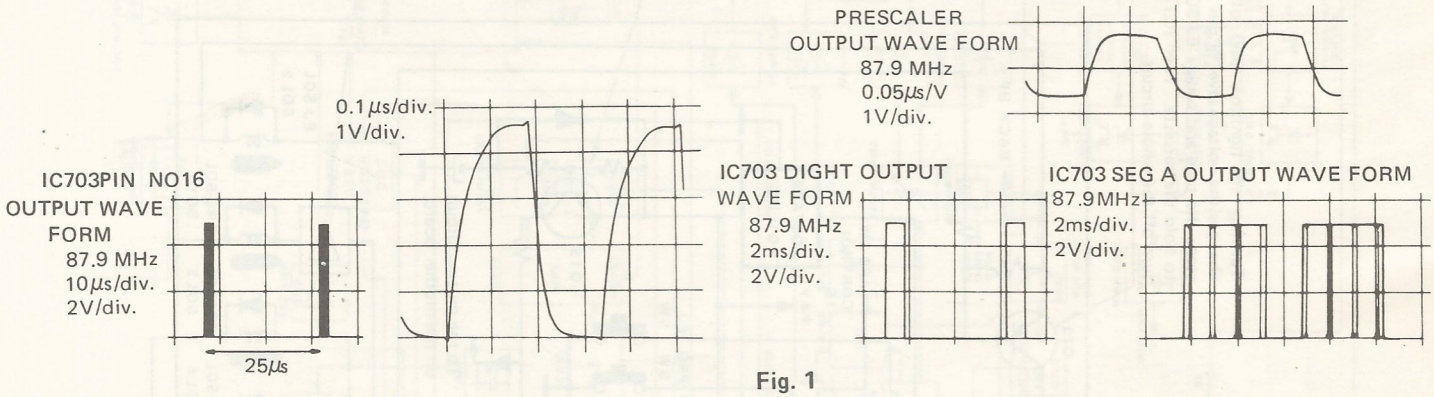

Fig. 1

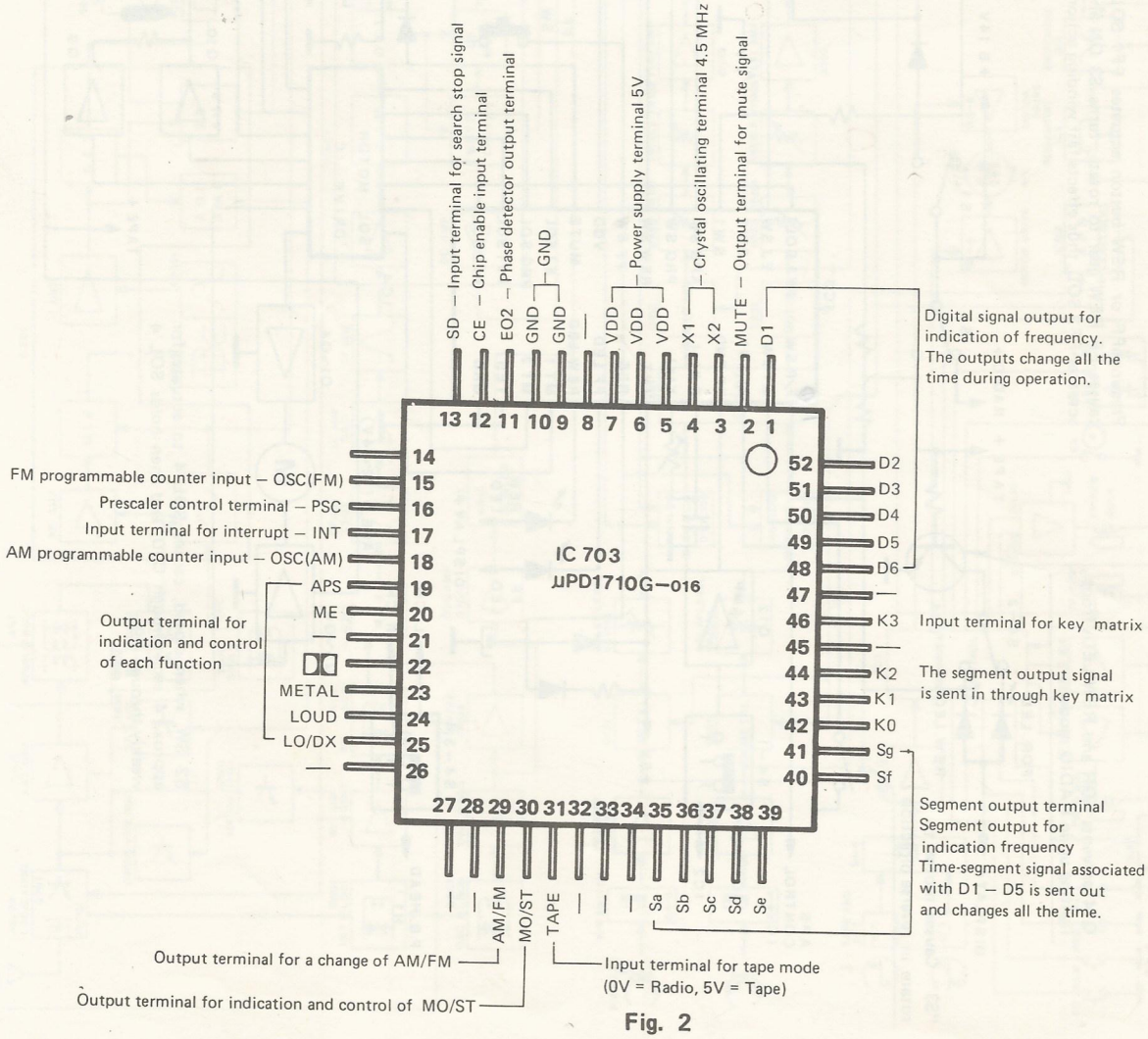

Fig. 2

SERVICE ALIGNMENT PROCEDURE

RADIO SECTION

AM CIRCUIT

Equipment Required

1. AC V.T.V.M.
2. Stabilized power supply (DC 14V)
3. Sweep generator (450kHz)
4. AM RF S.S.G.
5. DC voltage meter (Zi $\geq$100k ohm/V)

(A) AM IF alignment

(a) Connect the output of the sweep generator to TP7, and the vertical axis input of the oscilloscope to TP8. Let the vertical axis input of the oscilloscope be AC coupling (Refer to Figs. 1 and 3).

(b) Adjust the center frequency of the sweep generator to 450 kHz.

(c) When the waveform of the oscilloscope (Fig. 2) was confirmed, heighten the input sensitivity of oscilloscope as possible, and lower the output of sweep generator. (At this moment, if the waveform seems to be under the influence of external radio wave, change the receiving frequency of the receiver until the influence is minimized. And then perform IF adjustment.

(d) While viewing the waveform of the oscilloscope, align T801 and T802. Alignment is to be carried on until the maximum and symmetrical waveform is obtained and shown on the scope, where the sharpness of the waveform should not be too high.

(B) AM RF (Tracking) alignment

(a) Connect the V.T.V.M. to the speaker output of either channel, and the output of AM RF S.S.G. to the antenna through dummy antenna (Fig. 4).

(b) Tuning voltage calibration
Connect DC voltage meter to 4 pin of AM board.
Read the indications of DC voltage meter at the lower limit (522 kHz) and upper limit (1611 kHz).
Confirm that the voltage values (lower limit and upper limit) are approximately 1.5V and 8V, respectively.
If the values obtained are greatly deviated from the standard ones, adjust L803 and C824 (Note: since C824 is a fixed capacitor, replacing a different capacity of capacitor is necessary).

(c) Set the frequency of S.G. to 603 kHz exactly. Let the output level be the level of AGC being not working (less than 30 μV). Set the tuning of the receiver to 603 kHz. Place LOC/DX switch of the receiver in the DX position, and let VOL be near the maximum.

(d) Align RF801(ANT coil) and RF802(RF coil) to obtain the maximum output. At this moment, the core positions of RF801 and RF802 should be memorized.

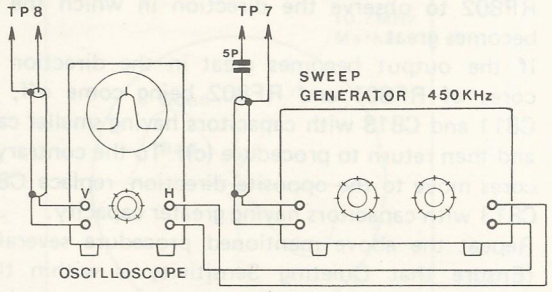

Fig. 1

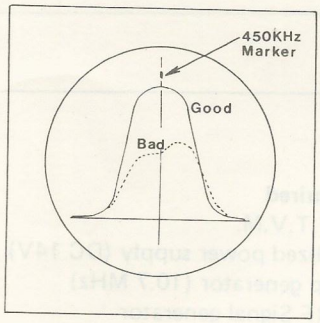

Fig. 2

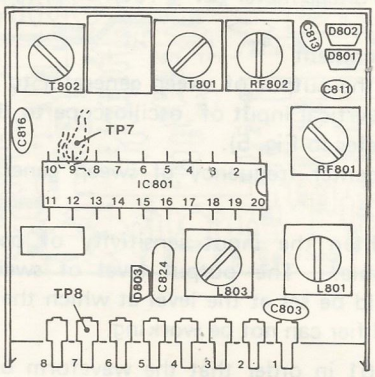

Fig. 3

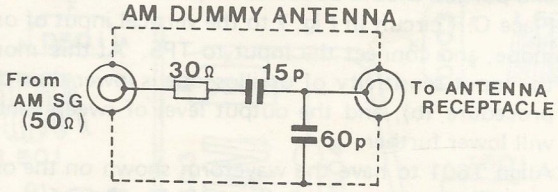

Fig. 4

(e) Set the frequency of S.G. to 1404 kHz, and the tuning of the receiver to 1404 kHz also. Move RF801 and RF802 to observe the direction in which the output becomes great.
If the output becomes great in the direction of the cores of RF801 and RF802 being come off, replace C811 and C813 with capacitors having smaller capacity, and then return to procedure (c). To the contrary, if the cores move to the opposite direction, replace C811 and C813 with capacitors having greater capacity.

(f) Repeat the above mentioned procedure several times. (Ensure that Quieting Sensitivity is within the specification).

Note:

1. If RF801 and RF802 are shifted slightly, align L803 to obtain the maximum sensitivity. And at this moment, ensure that the upper limit and lower limit of tuning voltage should be in the range of 1V ~ 8.5V.
2. Since D801, D802 and D803 are used as a single set, these three components should be replaced at the same time even if only one of the three is defective.
3. At the beginning, when power supply is provided, the pre-set address 1, 4, and 6 on the microprocessor of PLL used in this machine will be automatically pre-set to 1404 kHz, 999 kHz and 603 kHz respectively.

FM Circuit

Equipment Required

1. AC V.T.V.M.
2. Stabilized power supply (DC 14V)
3. Sweep generator (10.7 MHz)
4. FM RF Signal generator
5. Frequency counter
6. Stereo modulator
7. DC Voltage meter (Zi ≧100k ohm/V)

(A) FM IF alignment

(a) Connect the output of sweep generator to the antenna, and the vertical input of oscilloscope to the test point (TP4) (Refer to Fig. 5).

(b) Set the center frequency of sweep generator to 10.7 MHz.

Note: Heighten the input sensitivity of oscilloscope as possible. The output level of sweep generator should be set at the level at which the limiter of IF amplifier can not be working.

(c) Align T501 in order that the waveform of the oscilloscope may be the same as that shown in Fig. 6. The amplitude of the waveform should be maximum and symmetrical with respect to the vertical axis, and the end portion should be round shaped.

(d) Place C.R circuit in Fig. 7 to the vertical input of oscilloscope, and connect the input to TP5. At this moment, the input sensitivity of oscilloscope is lower than that in procedure (b), and the output level of sweep generator will lower further.

(e) Align T601 to have the waveform shown on the oscilloscope be the same as that shown in Fig. 8.

(f) Connect the output of FM RF signal generator to the antenna through dummy antenna. Set the frequency of FM RF sweep generator to 98 MHz exactly, and tune the receiver to 98 MHz as well. Let the output level of FM RF sweep generator be 1mV. Refer to Fig. 9.

(g) Connect DC voltage meter to TP2 and TP3. The voltage range of the meter should be set lower than 0.5V and then align T601 until the indication of voltage meter is at 0V.

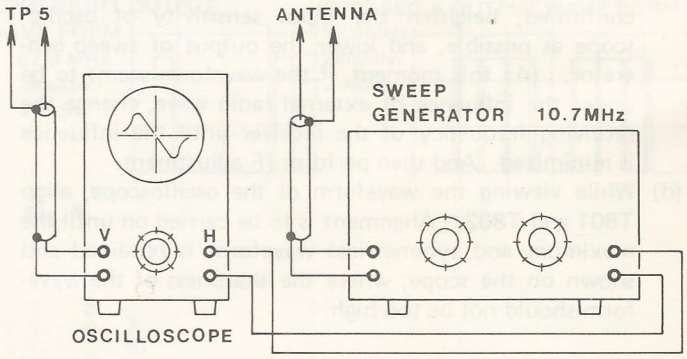

Fig. 5

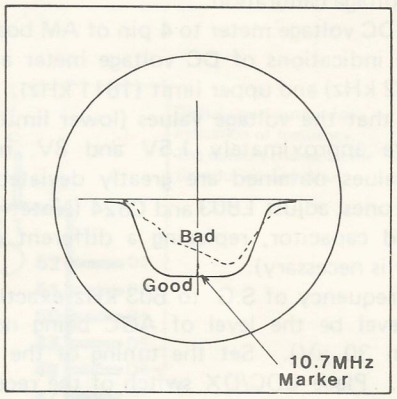

Fig. 6

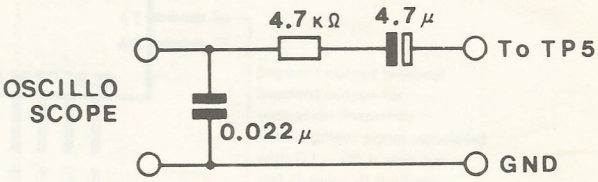

Fig. 7

(B) FM RF board alignment

(a) Connect FM RF S.G. to the antenna of the receiver through dummy antenna, and AC V.T.V.M. to the speaker output of either channel.

(b) Set the output level of FM RF signal generator to 3 μV, and modulation to 1 kHz deviation (30%). Adjust VOL of the receiver to the adequate position in accordance with indication of AC V.T.V.M.

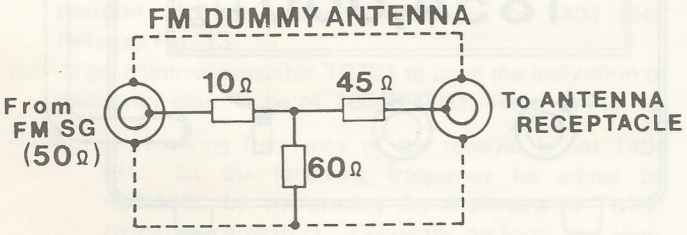

Fig. 9

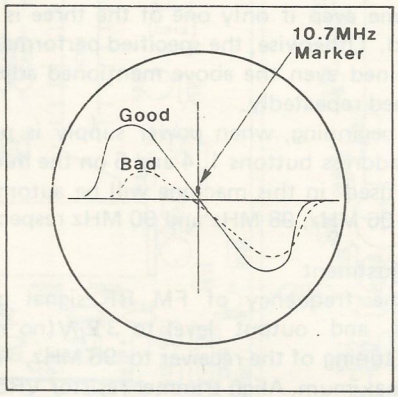

Fig. 8

(c) Tuning voltage calibration

Connect DC voltage meter to terminal No. F4 of FM RF Set the tuning of the receiver to 87.9 MHz. Record the reading of DC voltage meter, then change the tuning of the receiver to 107.9 MHz and in turn record the reading of DC voltage meter. Confirm that the two voltage values are to be approximately 1.5V and 7V, respectively. If the values indicated are greatly deviated from the standard ones, adjust L505 and C518.

Note: Since 1.2V and 9V are the allowably extreme values, re-confirmation must be made should L505 or C518 be moved for further alignment.

(d) Tune the frequency of FM RF signal generator to 90 MHz exactly, and the tuning of the receiver to 90 MHz as well. Align L501 (antenna coil) and L503 (RF coil) to obtain the maximum indication of the V.T.V.M.

(e) Tune the frequency of FM RF signal generator to 106 MHz, and the tuning of the receiver to 106 MHz as well. Move L501 and L503 to observe the reading of the V.T.V.M. If the indication of the V.T.V.M. increases when the density of coils winding decreases (becomes coarse), replace C503 and C507 with other capacitors having smaller capacity, and then perform the alignment of procedure (d). To the contrary, when the density of coils winding increases (becomes dense), replace C503 and C507 with other capacitors having larger capacity.

(f) Repeat the alignment of procedure (d) and (e) to obtain the maximum indication of the V.T.V.M.

Note: Since C503, C507 and C518 are chip capacitors, soldering iron used in soldering prases should be of less than 30W, and the temperature of the iron tip should be less than 280°C. Do not touch ceramic part directly with iron tip when performing processing.

Note:

1. If the change of indication of the V.T.V.M. is only a bit when moving L501 and L503 for adjustment, adjust L505 at 90 MHz to obtain maximum sensitivity.

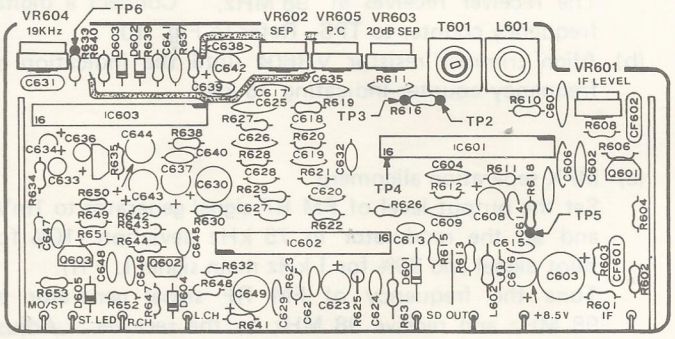

Fig. 10

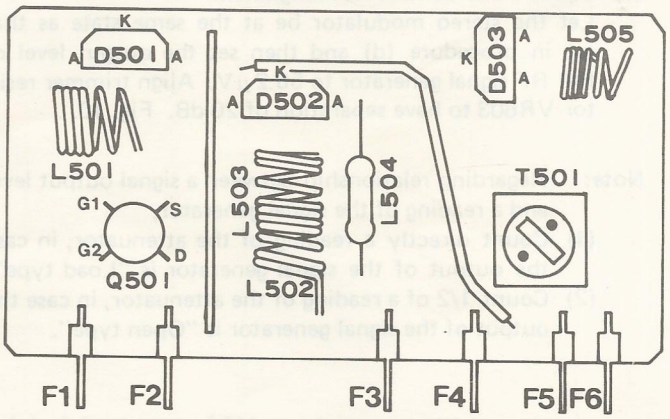

Fig. 11

2. The characteristics of D501, D502 and D503 are similar so that the three components should be replaced at the same time even if only one of the three is defective or damaged. Otherwise, the specified performance may not be obtained even the above mentioned adjustments are performed repeatedly.
3. At the beginning, when power supply is provided, the pre-set address buttons 1, 4 and 6 on the microprocessor of PLL used in this machine will be automatically pre-set to 106 MHz, 98 MHz and 90 MHz respectively.

(g) Gain adjustment
Tune the frequency of FM RF signal generator to 98 MHz and output level to 3.2μV(no modulation). Set the tuning of the receiver to 98 MHz, and set VOL to the maximum. Align trimmer resistor VR601to obtain the minimum indication of the V.T.V.M.

Note: Noise may be small even if trimmer resistor is dialed to the extreme position, counterclockwise. But, the optimum position of trimmer resistor is, in general at central part.

(C) FM MPX Circuit alignment

(a) Tune the frequency of FM RF signal generator to 98 MHz and output level to the no modulation value of 1mV.
The receiver receives at 98 MHz. Connect a digital frequency counter to TP6. Refer to Fig. 10.

(b) Align trimmer resistor VR604 until the indication of frequency counter indicating 76 kHz.

(c) MPX separation alignment
Set the output level of FM RF signal generator to 1mV, and set the modulator to 75 kHz deviation (10% for pilot signal and 90% for 1 kHz main signal L + R).
Tune the frequency of FM RF signal generator to 98 MHz and receive 98 MHz by the receiver. Adjust balance volume to have the right and left volumes be equal.

(d) Tune the mode selector of the stereo modulator to only R channel. Align trimmer resistor VR602 to obtain maximum separation. Fig. 10.

(e) Stereo noise control level alignment
Let the stereo modulator be at the same state as that set in procedure (d) and then set the output level of FM RF signal generator to 56.2μV. Align trimmer resistor VR603 to have separation of 20 dB. Fig. 10.

Note: Regarding relationship between a signal output level and a reading of the signal generator,
(1) Count directly a reading of the attenuator, in case the output of the signal generator is "Load type".
(2) Count 1/2 of a reading of the attenuator, in case the output of the signal generator is "Open type".

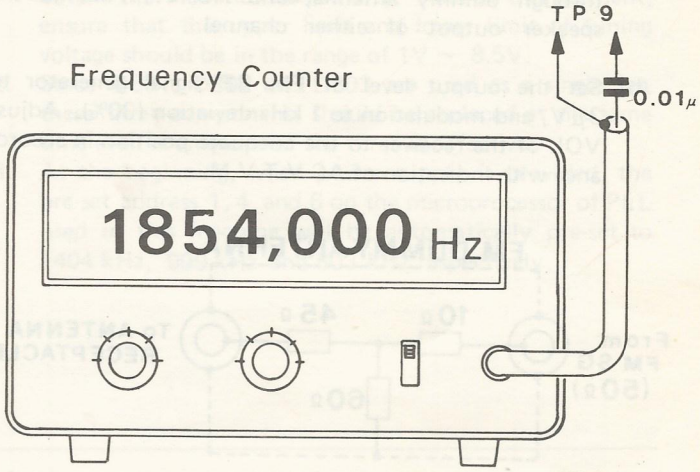

Fig. 12

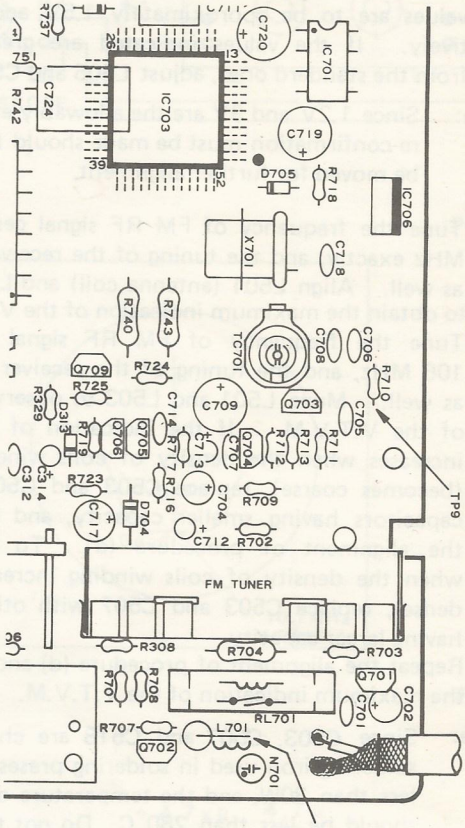

Fig. 13

PLL Microprocessor Circuit

Equipment Required

1. Stabilized power supply (DC 14V)
2. Frequency counter with more than 7 digits

Adjustment in crystal oscillator frequency

(a) Connect the input of frequency counter to TP9. Place the band changeover switch of the receiver in AM position and set receiving frequency to 1404 kHz. Refer to Fig. 13.

(b) Align trimmer capacitor TC701 to have the indication of frequency counter be of 1854000 Hz. Refer to Fig. 12.

Note: If receiving frequency of the receiver is not 1404 kHz, let the receiving frequency be added by 450 kHz, by performing the alignment of TC701 (trimmer capacitor). Correctly perform the alignment; otherwise radio will be affected.

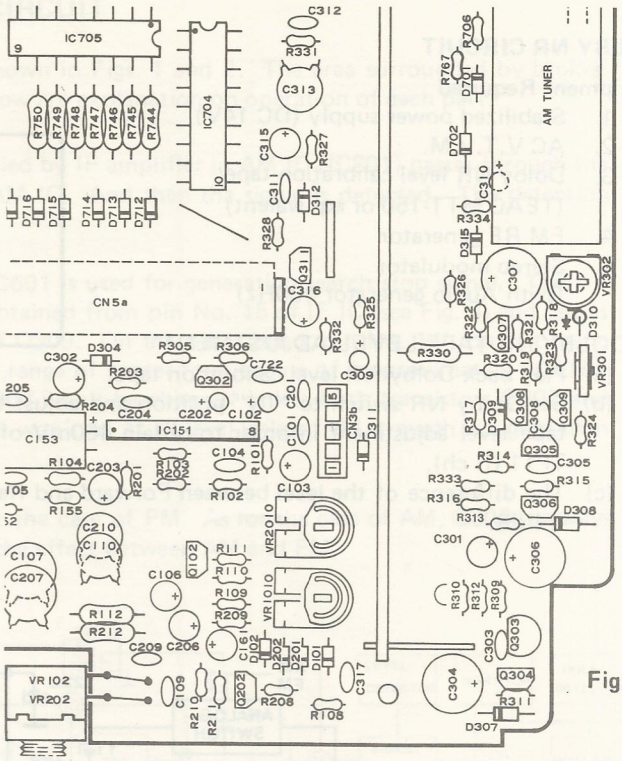

Fig. 14

AM/FM stop signal circuit alignment

Equipment Required

1. AM RF signal generator
2. FM RF signal generator
3. Stabilized power supply (DC 14V)
4. DC voltage meter

AM Circuit

Note: In the case of AM, confirmation is made by only performing the alignment of IF and RF.

(a) Connect the output of AM RF signal generator to the antenna, set the frequency of signal generator to 999 kHz exactly, perform auto search, change the output level of signal generator, and then confirm whether search stop is conducted correctly or not.

FM Circuit

Note: This adjustment is to be executed after completion of the adjustment of FM IF RF and PLL circuit.

(a) Confirmation of search stop band
Connect the output of FM RF signal generator to the antenna, and DC voltage meter to pin No. 13 of IC703 (the voltage range of DC voltage meter is set at 5V).
Let the output level of FM RF signal generator be of 1mV and set the frequency to 98 MHz. Set the tuning of the receiver to 98 MHz to confirm receiving condition. Place LOC/DX switch of the receiver in the DX position.

(b) While observing the DC voltage meter, change the frequency of FM RF signal generator from the set frequency to higher frequency and to lower frequency. Record or memorize the frequencies at which the reading of DC voltage meter starts dropping.
Confirm that the differential of the two frequencies recorded or memorized is to be about 40 ~ 60 kHz. If these two frequencies are unbalanced, execute procedure (f) and (g) of (A) FM IF alignment again.

(c) Adjustment of FM search stop sensitivity
Set the frequency of FM RF signal generator to 98 MHz and set the output to 14 μV. While observing DC voltage meter, align trimmer resistor VR301. The alignment is made until the indication of DC voltage is of 3 ~ 4V.

DOLBY NR CIRCUIT

Equipment Required

1. Stabilized power supply (DC 14V)
2. AC V.T.V.M.
3. Dolby NR level calibration tape (TEAC MTT-150 or equivalent)
4. FM RF generator
5. Stereo modulator (With Audio generator 400Hz)

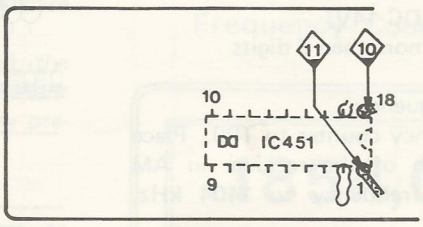

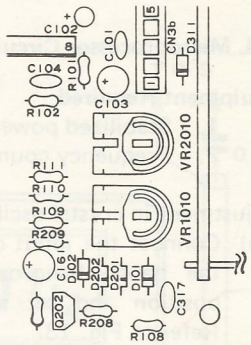

DOLBY NR TAPE LEVEL ADJUSTMENT

(a) Play back Dolby NR level calibration tape.

(b) Set Dolby NR switch to "IN" position and adjust the trimmer resistor VR1010 (L ch) and VR2010 (R ch) for tape level adjustment in order to obtain 450mV of reading on V.T.V.M. at the test points of TP10 (L ch) and TP11 (R ch).

(c) The difference of the level between Forward and Reverse directions of the tape transport/reproduction should be ±1 dB.

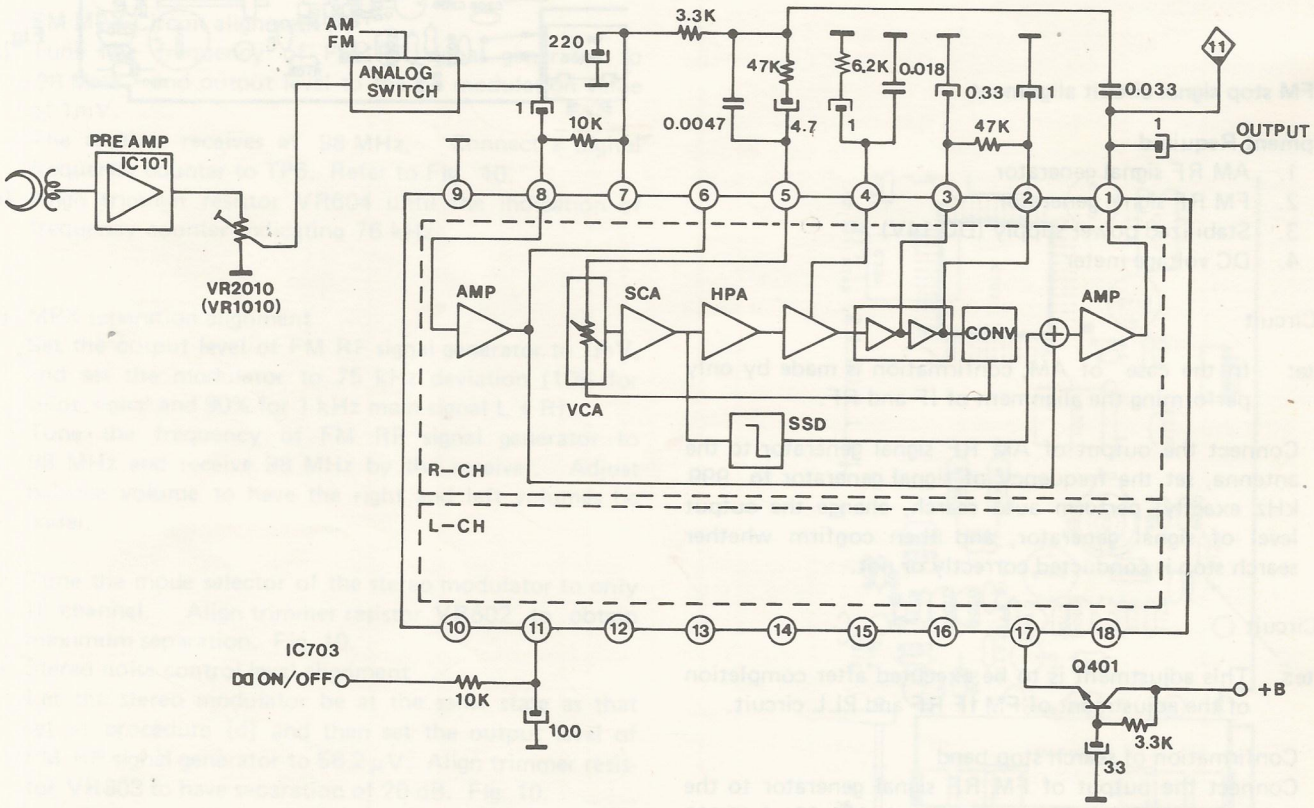

Noise reduction manufactured under license from Dolby Laboratories Licensing Corporation. "Dolby" and the double-D symbol are trade marks of Dolby Laboratories Licensing Corporation.

OPERATING DESCRIPTION FOR SEARCH STOP CIRCUIT

The block diagram and actual circuit of search stop circuit are shown in Figs. 1 and 2. The area surrounded by broken line in the block diagram is the common part for AM and FM. Below are explanation on operation of each part.

1. Operating description on AM reception
   In order to prevent mess-stop during search, the signal amplified by IF amplifier in AM IC (IC801) passes through the narrow band filter (CF802) and enters into SD circuit in AM IC. And then the signal is detected. The detection output is reversed at Q309 and applied to the base of Q308.
2. Operating description of FM reception
   In the case of FM, the output of two terminals of IF IC IC601 is used for generating search stop signal. The DC electrical potential responding to the field strength can be obtained from pin No. 15 of IF IC (see Fig. 3) and passes through D601 and VR301 and then is added to the base of Q309. On the other hand, pin No. 14's output being applied to Q307 is almost the same as GND potential in the range of center frequency $\pm\Delta f$ (approximately 50 kHz) as shown in Fig. 4. Therefore, the emitter potential of Q307 won't be changed unless both transistors Q307 and Q309 are ON. Thus in the case of FM, pin No. 13 of IC703 won't be at Hi level unless field strength is higher than Eo and receiving frequency is within Δf.

Note: Signal is applied to the base of transistor Q307 only for the case of FM. As for the case of AM, Q307 is always at ON state. Diodes D601 and D310 are for eliminating the effect between AM and FM.

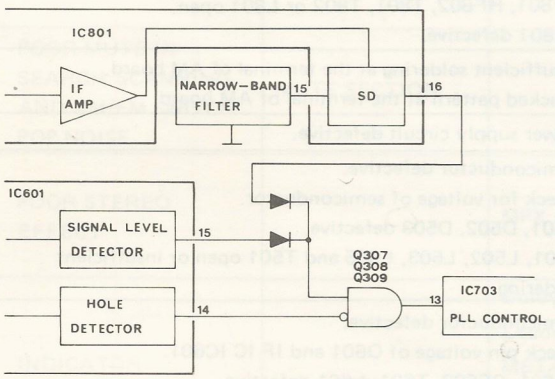

Fig. 1

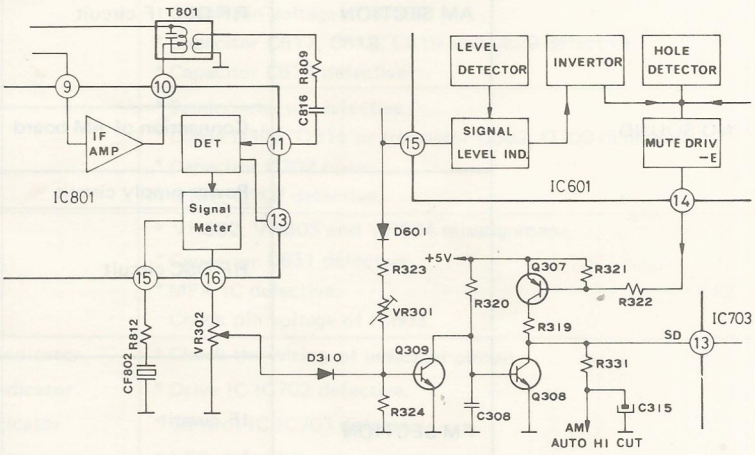

Fig. 2

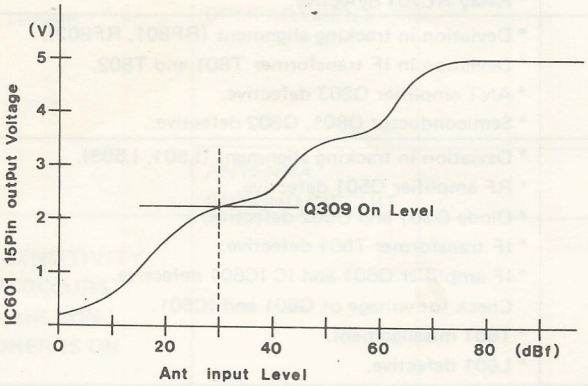

Fig. 3

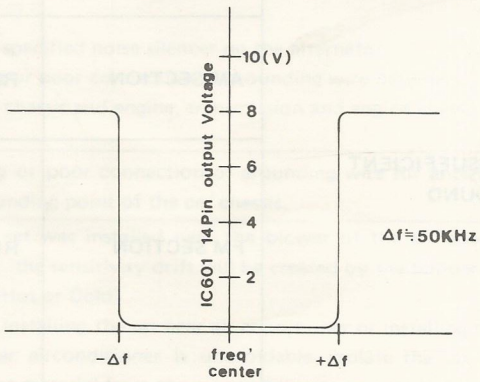

Fig. 4

TROUBLESHOOTING

RADIO SECTION

SYMPTOM	DEFECTIVE CIRCUIT		DEFECTIVE POINT AND CAUSE
NO SOUND	AM/FM SECTION	Antenna input circuit	* Antenna input circuit defective. Check wiring. * Poor antenna contact. Due to lower sensitivity, it does search scanning but not search stop.
		Power supply circuit or muting circuit	* Power supply circuit defective. * Q302, Q709 or C302 defective. * Analogue switch circuit defective. Check pin voltage of D102, D202, D604, D605.
	AM SECTION	Antenna input circuit	* Antenna input circuit defective. Noise choke coil L701 defective.
		Power supply circuit	* Power supply circuit defective.
		RF OSC IF circuit	* AM IC IC801 defective. Check pin voltage of IC801. * Semiconductor defective. Check for voltage of semiconductor. * RF801, RF802, T801, T802 or L801 open. * CF801 defective.
		Connection of AM board	* Insufficient soldering at the terminal of AM board. * Cracked pattern at the terminal of AM board.
	FM SECTION	Power supply circuit	* Power supply circuit defective.
		RF OSC circuit	* Semiconductor defective. Check for voltage of semiconductor. * D501, D502, D503 defective. * L501, L502, L503, L505 and T501 open or insufficient soldering.
		IF circuit	* Semiconductor defective. Check pin voltage of Q601 and IF IC IC601. * CF601, CF602, T601, L601 defective. * Trimmer resistor VR601 defective.
		NB MPX output circuit	* NB circuit defective. Check pin voltage of IC602. * MPX circuit defective. Check pin voltage of IC603. * Q602, Q603 defective.
		Analogue switch circuit	* Diode D604, D605 defective.
INSUFFICIENT SOUND	AM/FM SECTION	Antenna input circuit	* Poor antenna contact. * Relay RL701 defective.
	AM SECTION	RF IF circuit	* Deviation in tracking alignment (RF801, RF802). * Deviation in IF transformer T801 and T802. * ANT amplifier Q803 defective. * Semiconductor Q801, Q802 defective.
	FM SECTION	RF IF circuit	* Deviation in tracking alignment (L501, L503). * RF amplifier Q501 defective. * Diode D501 and D502 defective. * IF transformer T501 defective. * IF amplifier Q601 and IC IC601 defective. Check for voltage of Q601 and IC601. * T601 misalignment. * L601 defective.

TROUBLESHOOTING

SYMPTOM	DEFECTIVE CIRCUIT		DEFECTIVE POINT AND CAUSE
INSUFFICIENT SOUND	FM SECTION	NB circuit	* NB circuit defective. Check pin voltage of IC602.
		MPX circuit	* MPX circuit defective. Check pin voltage of IC603.
DISTORTED SOUND	AM SECTION	IF circuit	* AM IC IC801 defective. * Semiconductor Q802, Q804 defective.
	FM SECTION	IF circuit	* Misalignment or defective of T601.
OSCILLATION	AM/FM SECTION	Power supply circuit	* Capacitor C303, C305 defective.
	AM SECTION	RF IF circuit	* Capacitor C809, C810 and C815 defective.
	FM SECTION	RF IF circuit	* RF circuit defective. C513, C515 and C517 defective. * IF circuit defective. C602, C604, C606, C607, C609 and C611 defective.
POOR NB		NB circuit	* NB IC defective. Check pin voltage of IC602. * Capacitor C617, C618, C619 and C620 defective. * Capacitor C622 defective.
POOR MUTE IN SEARCH SCANNING AND AM/FM SWITCH POP NOISE	MUTE SECTION		* Semiconductor defective. * Diode D304, D311 or transistor Q302, Q709 defective. * Capacitor C302 open. * Q102, Q202 defective.
POOR STEREO EFFECT		MPX circuit	* VR602, VR603 and VR604 misalignment. * Capacitor C631 defective. * MPX IC defective. Check pin voltage of IC603.
INDICATOR DOES NOT LIGHT		Dolby NR indicator Loudness indicator METAL indicator APS indicator	* Check the wiring of indicator circuit. * Drive IC IC702 defective. * Control IC IC703 defective. * LED defective.
		Stereo indicator	* Check the wiring of stereo indicator circuit. * MPX IC IC603 defective. * LED defective.
ENGINE NOISE IS EXTREME	MOTOR COMPARTMENT		* Missing or poor connection of resistor wire on high tension coil of car. Insert noise preventing resistor between ignition coil and distributor of car. * Missing or poor connection of noise silencer by alternator of car. Install specified noise silencer on the alternator. * Missing or poor connection of grounding wire between engine chassis and engine, transmission and engine chassis of car.
	ANTENNA GROUND CIRCUIT		* Missing or poor connection of grounding wire for antenna to grounding point of the car chassis.
LESS SENSITIVITY DRIFT OCCURS WITH AIR CONDITIONER IS ON			* If the set was installed near the blower of the air conditioner, the sensitivity drift will be created by the temperature (Hot or Cold). Avoid installing the set near air conditioner or installing the set near airconditioner is unavoidable, isolate the set by isolating material from the air conditioner.

TROUBLESHOOTING

TAPE SECTION

SYMPTOM	DEFECTIVE CIRCUIT	DEFECTIVE POINT AND CAUSE
NO SOUND	Power supply circuit	* Switch S2 defective.
	Mechanism or motor	* Motor does not run. * Transistor Q1 – Q8 defective. IC3 defective. Motor defective. Resistor R13 defective. * Mechanism defective. Check for running of tape. * Cassette does not lock in operating position. Solenoid SOL2 open. IC4 defective.
	ATR circuit	* Faulty contact of slide switch S4.
	Dolby NR circuit	* Trimmer resistor VR1010 or VR2010 misalignment.
	Pre amplifier circuit	* Pre amplifier defective. Check each pin voltage of pre amplifier IC151. * Leakage of large amount of DC current into capacitor C103 or C203. * Head lead wire open. * Capacitor C153 short.
DISTORTED SOUND OR INSUFFICIENT SOUND	Pre amplifier circuit	* Pre amplifier circuit defective. Check each pin voltage of pre amplifier IC151.
	Head	* Head surface dirty. * Head azimuth angle misalignment.
OSCILLATION	Pre amplifier circuit	* C101 or C201 capacity insufficient or open.
ABNORMAL TAPE SPEED	Mechanism or motor	* Mechanism defective. * Motor defective. * Transistor Q3, Q4, Q5 or Q6 defective.
WOW AND FLUTTER	Flywheel drive section	* Flywheel, capstan or intermediate gear defective. * Reel table defective. * Belt, pinchroller, idler, flywheel or pulley defective. * Motor defective.
DOES NOT REVERSE (EITHER AUTO OR MANUAL)	ATR circuit	* Does not reverse when program selector is depressed. Transistor Q11 open. Program selector switch defective. Solenoid SOL1 defective. * Solenoid does not operate to reverse when the end of tape comes. Switch S4-1 defective. Transistor Q12 defective. Control IC IC3 defective.
NO SELECTION	Cassette program selection circuit	* Cassette program selection defective. Check each pin voltage of APS IC152. * Capacitor C158 or C159 defective. * Control IC IC3 defective.

TROUBLESHOOTING

SYMPTOM	DEFECTIVE CIRCUIT		DEFECTIVE POINT AND CAUSE
DOES NOT WORK FUNCTION SWITCHES	PROG switch	PROG circuit	* Program switch defective. * Transistor Q11 defective. * Solenoid SOL1 defective.
	FF, REW switch	FF, REW circuit	* FF, REW switch defective. * Missing or poor contact of S3. * Transistor Q9, Q10 or IC4 defective. * Solenoid SOL3 or SOL4 defective.
CASSETTE EJECTING 2 – 4 SECONDS AFTER INSERTION	"Sol 2" holding circuit		* IC4 defective. * SOL2 defective. * Fuse F1 blown.

RADIO AND TAPE SECTION

SYMPTOM	DEFECTIVE CIRCUIT	DEFECTIVE POINT AND CAUSE
NO SOUND	Power supply circuit	* Fuse open. Transistor Q155 or Q156 defective. Radio/Tape switch S2 defective. * Faulty connection to the battery. * Lead wire cold soldered.
	Amplifier circuit	* Ripple filter defective. Transistor Q153 open. Diode D151 open. * Flat amplifier defective. Check each pin voltage of Flat amplifier Q103, Q203. Power amplifier IC154 or IC452 defective.
POOR DOLBY NR EFFECT OR NO SOUND	Dolby NR circuit	* Check wiring or Dolby NR ON/OFF circuit. * Capacitor C417 defective. * Dolby NR IC defective. * Check each pin voltage of Dolby NR IC451
DISTORTED SOUND OR INSUFFICIENT SOUND	Dolby NR circuit	* Capacitor C418 defective.
	Tone control circuit	* Variable resistor VR101, VR102, VR201, VR202 defective. * Lead wire open.
	Amplifier circuit	* Flat amplifier circuit defective. Check pin voltage of transistor Q103, Q203. *Power amplifier IC IC154 or IC452 defective.
OSCILLATION	Power supply circuit	* C165 capacity insufficient or open.
	Amplifier circuit	* Ripple filter defective. Transistor Q153 defective. C163 capacity insufficient or open.
ENGINE NOISE IS EXTREME	Grounding wire circuit	Missing or poor connection of grounding wire between main unit and power amplifier.
	Amplifier circuit	* Ripple filter defective. Transistor Q153 short. C163 capacity insufficient or open. * Capacitor C162 insufficient or open. * Capacitor C165 open.
DIMMER DOES NOT FUNCTION	DIMMER CIRCUIT	* Check emitter voltage of Q710 (The LED display will be incapable but other controls remain their functions, in this case). * CDS or Q712, Q713 defective.

TROUBLESHOOTING

SYMPTOM	DEFECTIVE CIRCUIT		DEFECTIVE POINT AND CAUSE
A DIGIT OR SEGMENT DOES NOT DISPLAY OR FAIL	POWER SUPPLY CIRCUIT OR BATTERY BACK-UP CIRCUIT		* Q710, Q711 defective. * Diode D706, D722 defective. * Q707 defective. * IC 706 defective.
	DIGIT/SEGMENT DRIVE CIRCUIT		* IC IC704, IC705 defective. * DISP2 defective.
NO FREQUENCY DISPLAY			* Defective IC706, Fuse 1, IC703, Q710.
1SEGMENT OF ONE 1 DIGIT NOT ILLUMINATING			* Defective Display.
SAME SEGMENT OF ALL DIGITS NOT ILLUMINATING			* Defective IC704, IC705, CN5a, CN5b.
MANUAL TUNING INOPERATIVE			* Check wiring. * UP, DOWN switch or D713 defective.
PRESETTING OR SELECTION OF PRESET STATIONS INOPERATIVE			* D713, D714 defective. * Each function switch defective.
NO SEARCH SCANNING	AM/FM SECTION	Stop circuit	* Seek switch defective. * Search stop circuit defective.
	AM SECTION	PLL circuit	* Q703 defective.
	FM SECTION	PLL circuit	* IC IC701 defective. * Q704 defective.
THE UNIT SEARCH SCANS BUT DOES NOT STOP	AM/FM SECTION		* Transistor Q307, Q308 or Q309 defective.
	AM SECTION	Stop circuit	* Diode D310 defective. * AM IC IC801 defective. * Ceramic filter CF802 defective.
	FM SECTION		* Diode D601, D315 or Trimmer resistor VR301 defective. * IF IC IC601 defective.
IN THE CASE OF FM, THE RECEIVING FREQUENCY CAN ONLY BE MATCHED EVERY 8 STEPS (800 kHz). REFER TO CHART 1 FOR PLL.			* IC 701 or IC703 defective.

WIRING LAYOUT

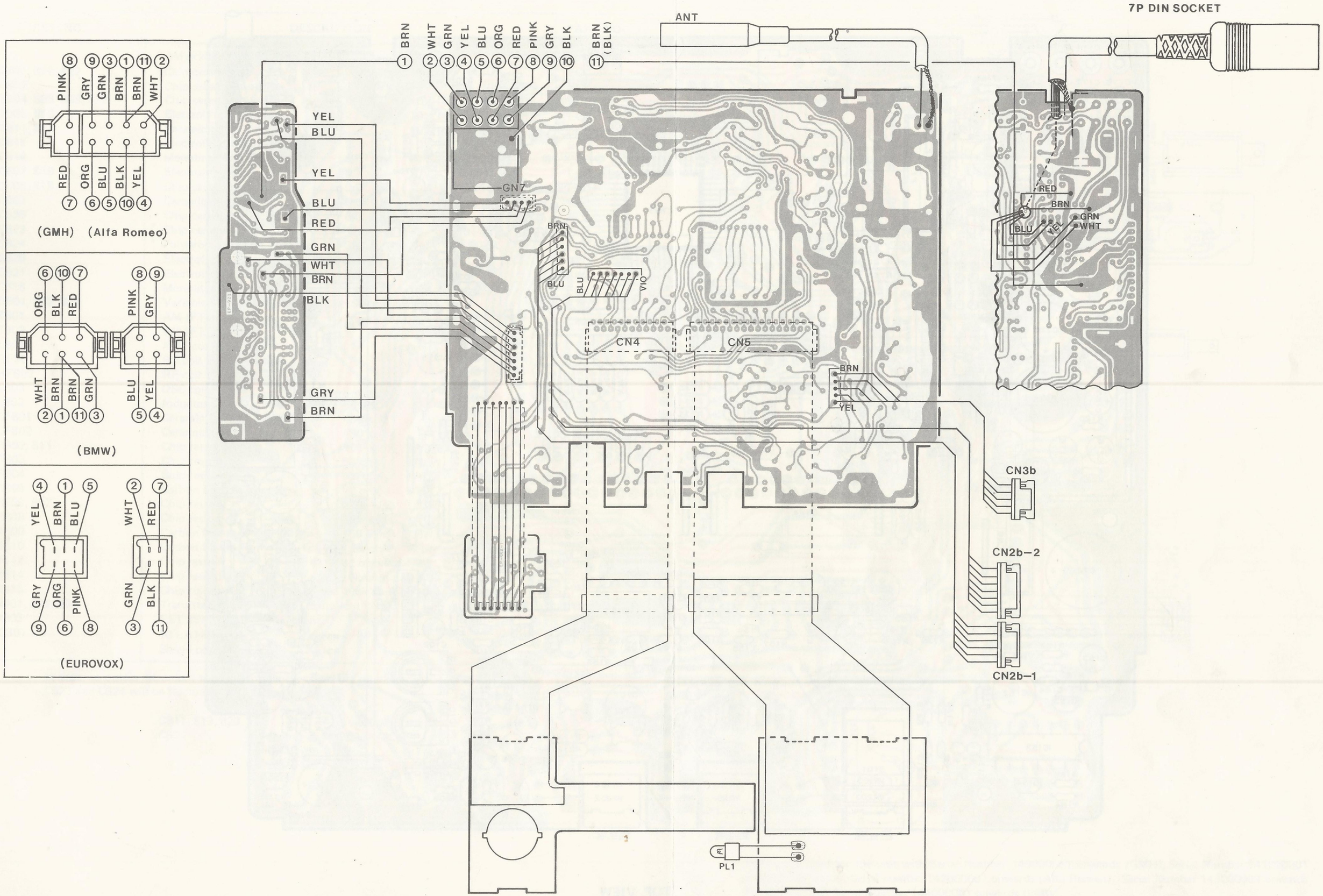

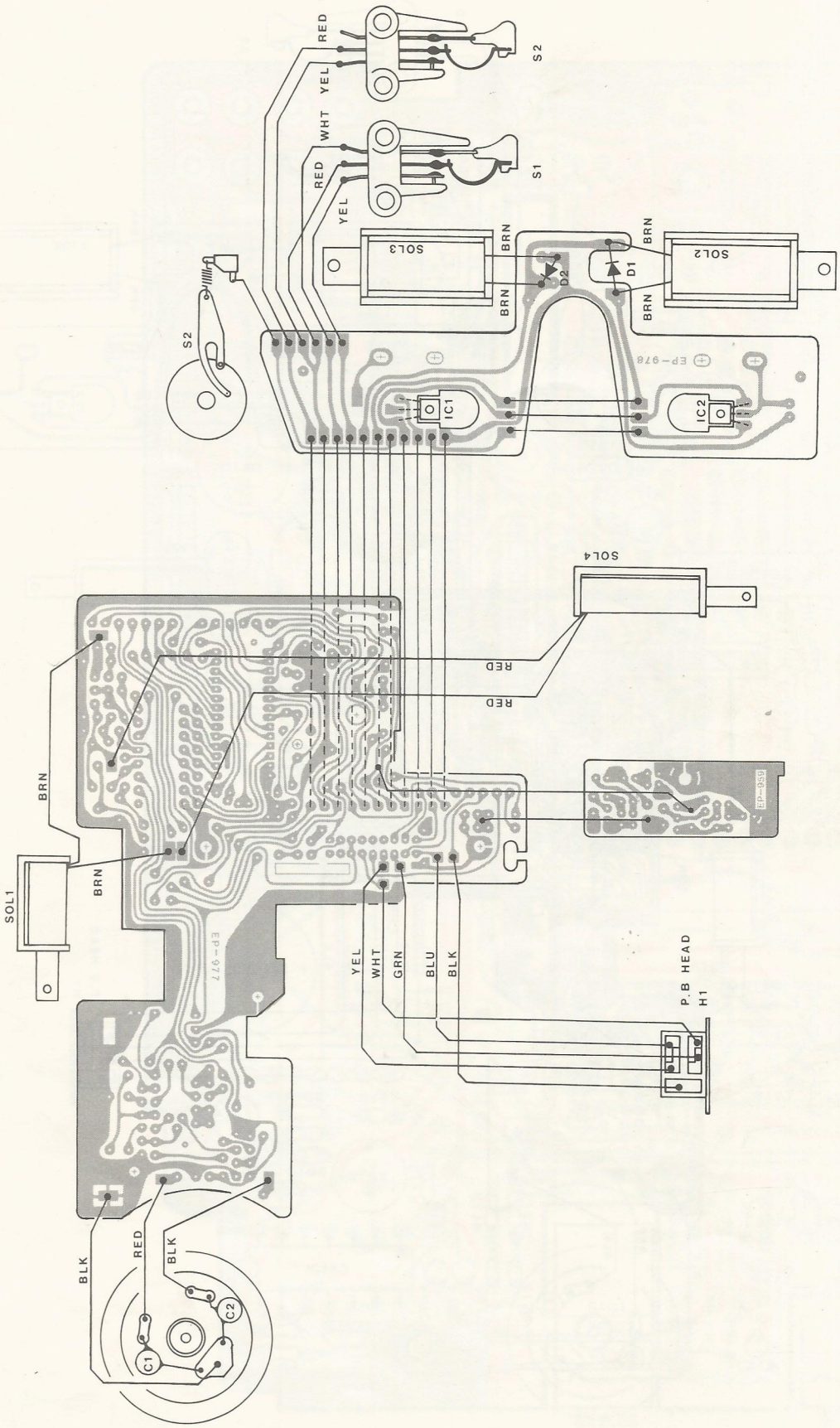

This part is only applicable to the limited quantity of the units with the Serial Numbers up to 140000550 (GMH).

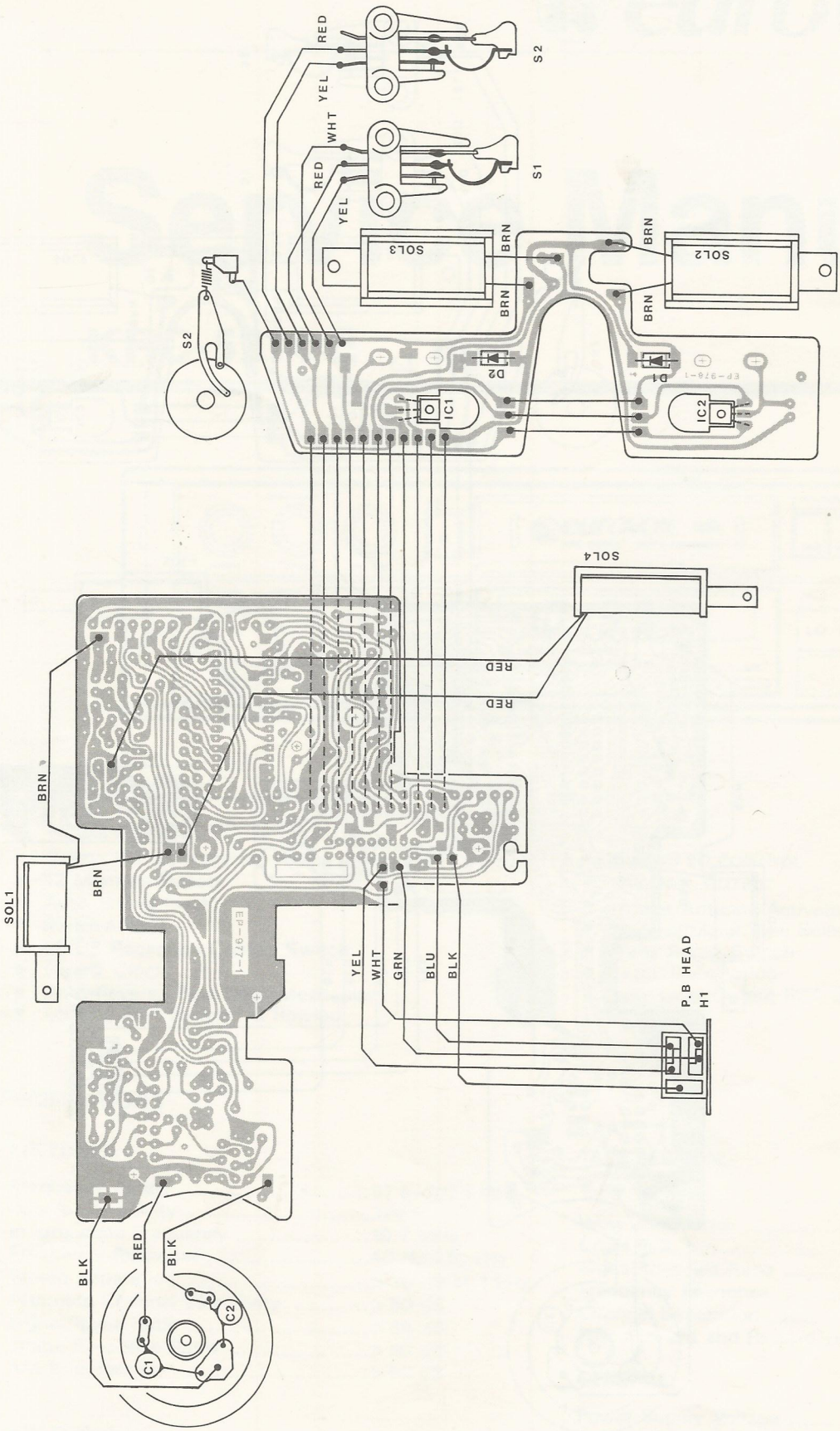

This part is used for the unit with Serial Number 140000551 onwards (GMH), Serial Number 141000001 onwards (Eurovox), Serial number 142000001 onwards (Alfa Romeo), Serial Number 143000001 onwards (PORSCHE) and Serial Number 144000001 onwards (BMW).

MAIN CIRCUIT BOARD COMPONENT LOCATION GUIDE

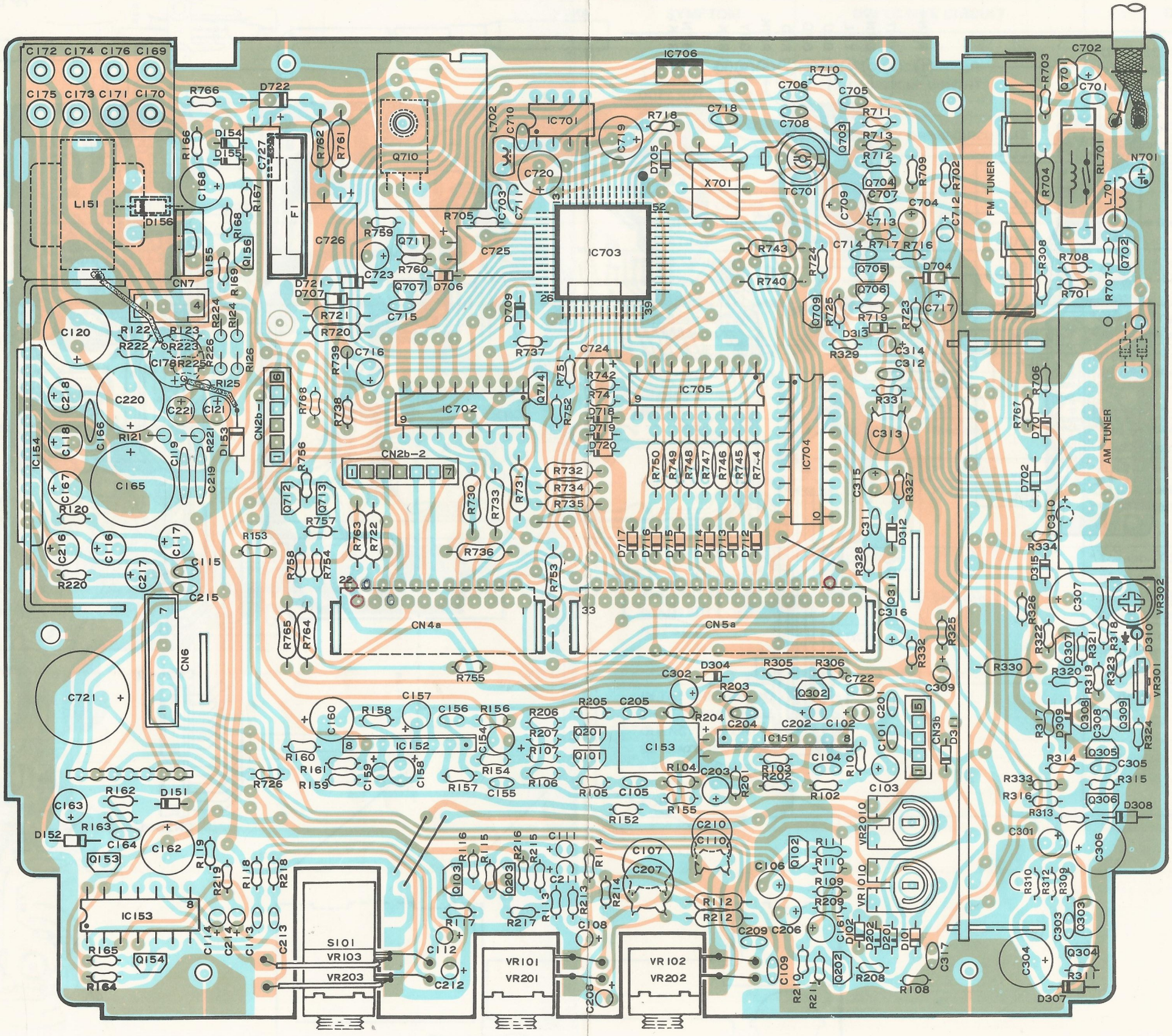

TOP VIEW

Q707

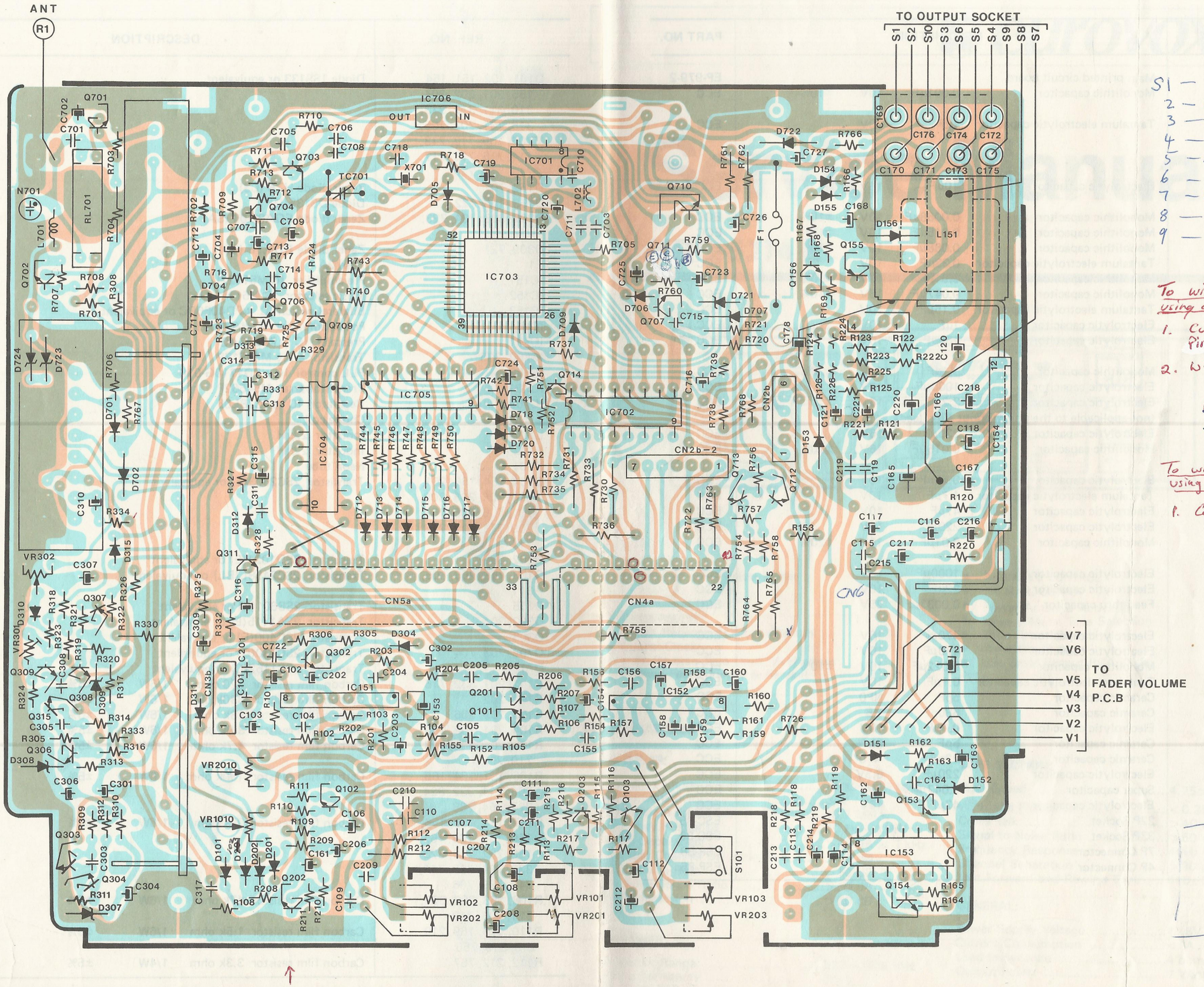

S1 — B/U (C169)
2 — AUTO ANT. (C170)
3 — +12V. (C171)
4 — F.L. (C172) -
5 — R.R. (C173) -
6 — R.L. (C174) -
7 — SP. GND. (GND.)
8 — GND. (GND.)
9 — F.R. (C175) -

To wire trigger lead using auto ant. lead.

1. Cut print between Pin "S2" & Diode D155
2. Wire 2 diodes:

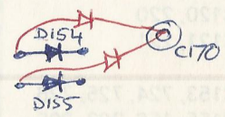

To wire trigger lead using extra wire for trigger

1. Connect 2 diodes:

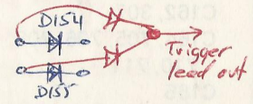

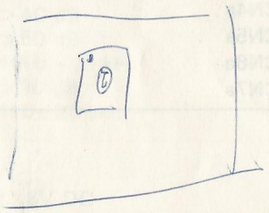

REF. NO. 23 CTP-169 MAIN CIRCUIT BOARD ASSEMBLY PARTS LIST

REF. NO.	DESCRIPTION				PART NO.
—	Main printed circuit board				EP-979-2
C101, 113, 115, 201, 213, 215	Monolithic capacitor	0.001μF	10V	±10%	ECC
C102, 106, 111, 112, 154, 158, 161, 202, 206, 211, 212, 309, 316, 702, 713	Tantalum electrolytic capacitor	1μF	10V		ECC
C103, 203, 301, 302, 315, 716, 723	Electrolytic capacitor	10μF	16V		ECC
C104, 204, 311	Monolithic capacitor	0.0068μF	10V	±10%	ECC
C105, 205	Monolithic capacitor	0.015μF	10V	±10%	ECC
C107, 207	Monolithic capacitor	0.068μF	10V	±10%	ECC
C108, 208, 712	Tantalum electrolytic capacitor	0.33μF	10V		ECC
C109, 209, 714	Monolithic capacitor	0.01μF	10V	±10%	ECC
C110, 166, 210, 313	Monolithic capacitor	0.047μF	16V	±10%	ECC
C114, 214	Tantalum electrolytic capacitor	0.15μF	10V		ECC
C116, 216	Electrolytic capacitor	1μF	10V		ECC
C117, 118, 163, 217, 218, 717	Electrolytic capacitor	100μF	10V		ECC
C119, 219	Monolithic capacitor	0.1μF	16V	±20%	ECC
C120, 220	Electrolytic capacitor	1000μF	10V		ECC
C121, 221	Electrolytic capacitor (not applicable to the unit without Aux. lead)	2.2μF	16V		ECC
C153, 724, 725, 726	Electrolytic capacitor	220μF	16V		ECC
C155, 156, 303, 305, 308, 715, 722	Monolithic capacitor	0.015μF	16V	±20%	ECC
C157	Electrolytic capacitor	0.22μF	10V		ECC
C159, 310	Tantalum electrolytic capacitor	4.7μF	10V		ECC
C160, 168, 709	Electrolytic capacitor	47μF	10V		ECC
C162, 307	Electrolytic capacitor	220μF	10V		ECC
C164, 705, 706, 708, 710, 711	Monolithic capacitor	0.01μF	16V	±20%	ECC
C165	Electrolytic capacitor	1000μF	16V		ECC
C167	Electrolytic capacitor	22μF	10V		ECC
C169, 170, 171, 172, 173, 174, 175, 176	Feed-thru capacitor	0.0033μF	25V		ECC
C178	Electrolytic capacitor	470μF	16V		ECC
C304, 306	Electrolytic capacitor	470μF	10V		ECC
C312, 317	Monolithic capacitor	0.022μF	10V	±10%	ECC
C314	Tantalum electrolytic capacitor	0.1μF	10V		ECC
C701	Ceramic capacitor	5pF	NP0		ECC
C703	Ceramic capacitor	680pF	YB		ECC
C704	Electrolytic capacitor	0.1μF	10V		ECC
C707	Ceramic capacitor	5pF	SL		ECC
C718	Ceramic capacitor	22pF	NP0		ECC
C719, 720	Electrolytic capacitor	220μF	6.3V		ECC
C721	Super capacitor	0.047μF	5V		ECC
C727	Electrolytic capacitor	47μF	16V		ECC
CN4a	22P Socket				ESC-85
CN5a	33P Socket				ESC-86
CN6a	7P Connector				ESP-88
CN7a	4P Connector				ESP-85

REF. NO.	DESCRIPTION	PART NO.
D101, 102, 151, 154, 155, 201, 202, 304, 310, 311, 312, 313, 315, 701, 702, 705, 706, 709, 712, 713, 714, 715, 716, 717, 718, 719, 720	Diode 1SS133 or equivalent	ETD
D152, 707	Zener diode HZ6 (C3)	ETD
D153, 156, 722	Diode DS135(D)	ETD
D307, 308, 704, 723, 724	Zener diode EQA02-09 (SA)	ETD
D309, 721	Zener diode RD5.1E (B2)	ETD
F1	Fuse 2A	ESX-86
IC151	Pre amplifier IC M51522L	ETI-62
IC152	Music selector IC M51143AL	ETI-86
IC153	Bilateral switch IC μPD4066BC or equivalent	ETI-104
IC154	Power amplifier IC HA13001	ETI-106
IC701	Prescaler IC μPB553AC	ETI-89
IC702, 705	Transistor array M54517P	ETI-57
IC703	PLL control IC μPD1710G-016	ETI-115
IC704	Transistor array M54562P	ETI-111
IC706	Regulator IC μPC78L05	ETI-58
L151	Choke coil	ELS-99
L701	Inductor 22μH	ELA-35
L702	Inductor 22μH	ELD-164
N701	Neon tube	EIN-4
Q101, 154, 156, 201, 304, 306, 308, 309, 701, 705, 706, 707, 709, 711, 712, 713, 714	Transistor 2SC2603(E) or equivalent	ETTC
Q102, 202	Transistor 2SD1021(E) or equivalent	ETTD
Q103, 153, 203, 305, 311	Transistor 2SC2458L(BL) or equivalent	ETTC
Q155	Transistor 2SB601(L) or equivalent	ETTB
Q302, 307	Transistor 2SA1115(E) or equivalent	ETTA
Q303	Transistor 2SD400(F) or equivalent	ETTD
Q702, 703, 704	Transistor 2SC930(D) or equivalent	ETTC
Q710	Transistor 2SC1162(C) or equivalent	ETTC
R101, 201, 332, 716	Carbon film resistor 220 ohm 1/6W ±5%	ECR
R102, 202	Carbon film resistor 330k ohm 1/6W ±5%	ECR
R103, 203, 306	Carbon film resistor 18k ohm 1/6W ±5%	ECR
R104, 204, 109, 209	Carbon film resistor 3.9k ohm 1/6W ±5%	ECR
R105, 205, 305, 718, 719, 752	Carbon film resistor 4.7k ohm 1/6W ±5%	ECR
R106, 111, 154, 165, 206, 211, 322, 324, 327, 754, 768	Carbon film resistor 100k ohm 1/6W ±5%	ECR
R107, 118, 155, 156, 159, 164, 166, 167, 168, 207, 218, 323, 333, 724, 738, 741, 742, 739, 706	Carbon film resistor 22k ohm 1/6W ±5%	ECR
R108, 153, 208, 320, 321, 703, 712	Carbon film resistor 47k ohm 1/6W ±5%	ECR
R110, 119, 169, 210, 219, 319, 756	Carbon film resistor 1.5k ohm 1/6W ±5%	ECR
R112, 212, 767	Carbon film resistor 3.3k ohm 1/4W ±5%	ECR

REF. NO.	DESCRIPTION				PART NO.
R113, 213, 726	Carbon film resistor	680 ohm	1/6W	±5%	ECR
R114, 117, 160, 214, 217, 310, 317, 711, 760	Carbon film resistor	1k ohm	1/6W	±5%	ECR
R115, 215, 158	Carbon film resistor	560k ohm	1/6W	±5%	ECR
R116, 216, 313	Carbon film resistor	2.2k ohm	1/6W	±5%	ECR
R120, 220, 701	Carbon film resistor	100 ohm	1/6W	±5%	ECR
R121, 221	Carbon film resistor	1 ohm	1/4W	±5%	ECR
R122, 124, 222, 224	Carbon film resistor	15k ohm	1/6W	±5%	ECR
	(not applicable to the unit without Aux. lead)				
R123, 126, 223, 226	Carbon film resistor	680 ohm	1/6W	±5%	ECR
	(not applicable to the unit without Aux. lead)				
R125, 225	Carbon film resistor	1.2k ohm	1/6W	±5%	ECR
	(not applicable to the unit without Aux. lead)				
R152, 326	Carbon film resistor	1.2k ohm	1/6W	±5%	ECR
R157	Carbon film resistor	1M ohm	1/6W	±5%	ECR
R161, 163, 311, 312, 315, 316, 331, 334, 702, 709, 737, 751	Carbon film resistor	10k ohm	1/6W	±5%	ECR
R162, 308	Carbon film resistor	10 ohm	1/6W	±5%	ECR
R309, 314, 766	Carbon film resistor	5.6 ohm	1/6W	±5%	ECR
R318, 725, 755	Carbon film resistor	3.3k ohm	1/6W	±5%	ECR
R325, 717	Carbon film resistor	1.8k ohm	1/6W	±5%	ECR
R328, 329, 705	Carbon film resistor	220k ohm	1/6W	±5%	ECR
R330	Carbon film resistor	1k ohm	1/4W	±5%	ECR
R704, 740, 743	Carbon film resistor	22k ohm	1/4W	±5%	ECR
R707, 708	Carbon film resistor	15k ohm	1/6W	±5%	ECR
R710	Carbon film resistor	150k ohm	1/6W	±5%	ECR
R713, 723	Carbon film resistor	470 ohm	1/6W	±5%	ECR
R720, 744, 745, 746, 747, 748, 749, 750	Carbon film resistor	39 ohm	1/4W	±5%	ECR
R721	Carbon film resistor	10k ohm	1/4W	±5%	ECR
R722, 730, 731, 732, 733, 734, 735, 736, 753	Carbon film resistor	330 ohm	1/4W	±5%	ECR
R757, 759	Carbon film resistor	8.2k ohm	1/6W	±5%	ECR
R758	Carbon film resistor	39k ohm	1/6W	±5%	ECR
R761	Carbon film resistor	2.2 ohm	1/2W	±5%	ECR
R762	Carbon film resistor	1 ohm	1/2W	±5%	ECR
R763	Carbon film resistor	120 ohm	1/2W	±5%	ECR
R763	Carbon film resistor	150 ohm	1/2W	±5%	ECR
	(only for BMW version CTP-171)				
R764	Carbon film resistor	180 ohm	1/2W	±5%	ECR
R764	Carbon film resistor	220 ohm	1/2W	±5%	ECR
	(only for BMW version CTP-171)				
R765	Carbon film resistor	100 ohm	1/2W	±5%	ECR
R765	Carbon film resistor	150 ohm	1/2W	±5%	ECR
	(only for BMW version CTP-171)				
RL701	Reed relay				ESR-68
TC701	Trimmer capacitor 50pF				ECCV-24
VR1010, 2010	Trimmer resistor 50k ohm B				ECRV-196C
VR301	Trimmer resistor 300k ohm B				ECRV-336D
VR302	Trimmer resistor 10k ohm B				ECRV-397
X701	Crystal 4.5MHz				EOC-5
	Holder – Power amplifier IC				PL-2778
	Cord clamp				PP-432
	PC board – Shield				EP-882

AM CIRCUIT BOARD COMPONENT LOCATION GUIDE

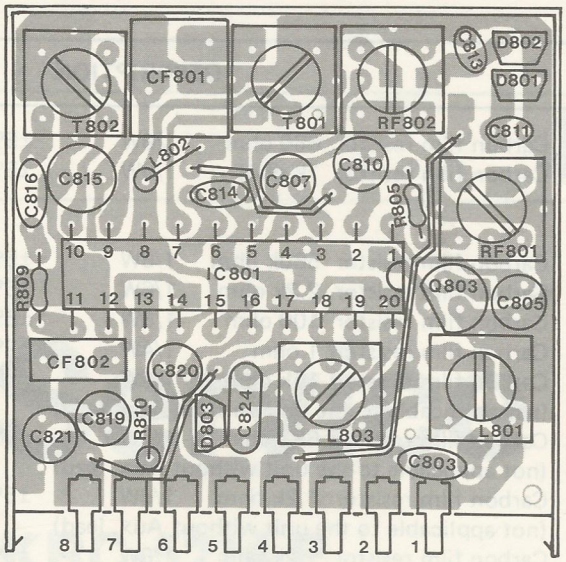

TOP VIEW

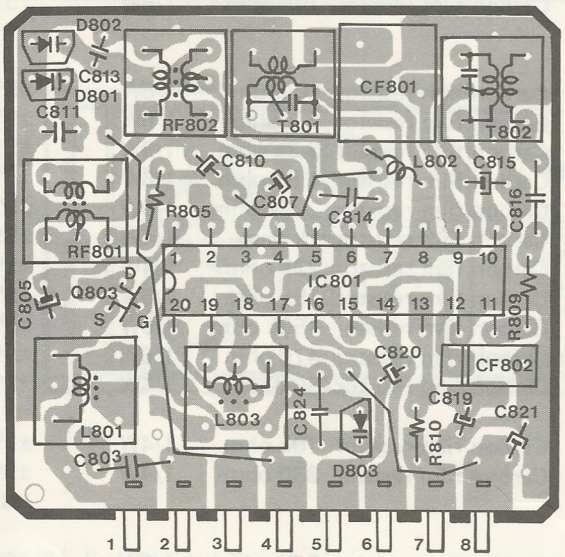

BOTTOM VIEW

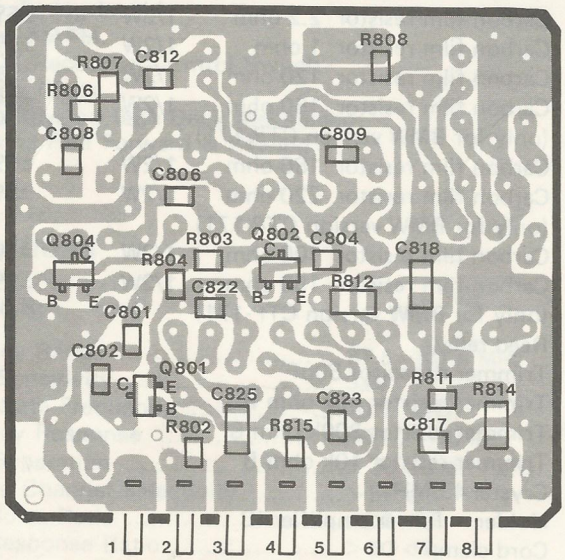

BOTTOM VIEW

REF. NO. 28 AR-77 AM CIRCUIT BOARD ASSEMBLY PARTS LIST

REF. NO.	DESCRIPTION					PART NO.
–	AM printed circuit board					
C801, 817, 822	Chip ceramic capacitor	0.022 μF	10V	YB	±10%	ECC
C802	Chip ceramic capacitor	1800pF	10V	YF	+80/–20%	ECC
C804, 808, 809, 812	Chip ceramic capacitor	0.022 μF	10V	YF	+80/–20%	ECC
C805, 810	Electrolytic capacitor	22 μF	10V			ECC
C811, 813	* Ceramic capacitor	7pF	10V	N330		ECC
C815	Electrolytic capacitor	33 μF	10V			ECC
C814	Monolithic capacitor	0.01 μF	10V		±20%	ECC
C807, 819	Electrolytic capacitor	3.3 μF	10V			ECC
C806, 818	Chip ceramic capacitor	0.01 μF	10V	YB	±10%	ECC
C803	Ceramic capacitor	0.02 μF	10V	YF	+80/–20%	ECC
C825	Chip ceramic capacitor	0.022 μF	10V	YF	+80/–20%	ECC
C823	* Chip ceramic capacitor	12pF	10V	N330		ECC
C824	* Polypropylene film capacitor	390pF	10V		±5%	ECC
C820	Electrolytic capacitor	0.47 μF	10V			ECC
C821	Electrolytic capacitor	4.7 μF	10V			ECC
C816	Monolithic capacitor	0.022 μF	10V		±20%	ECC
D801, 802, 803	Variable capacitance diode SVC321SP or equivalent					ETD
T801	AM IFT					
T802	AM IFT					
L801	ANT coil					
RF801	RF coil					
RF802	RF coil					
L803	OSC coil					
L802	Inductor	56 μH				
CF801	Ceramic filter	450 kHz				
CF802	Ceramic filter	450 kHz				
R802, 811	Chip resistor	10k ohm	1/10W		±5%	ECR
R803	Chip resistor	33 ohm	1/10W		±5%	ECR
R804	Chip resistor	1M ohm	1/10W		±5%	ECR
R805	Carbon film resistor	22 ohm	1/6W		±5%	ECR
R806, 807	Chip resistor	220k ohm	1/10W		±5%	ECR
R808	Chip resistor	6.8k ohm	1/10W		±5%	ECR
R809	Carbon film resistor	100 ohm	1/6W		±5%	ECR
R810	Carbon film resistor	1.5k ohm	1/8W		±5%	ECR
R812	Chip resistor	82 ohm	1/8W		±5%	ECR
R814	Chip resistor	10k ohm	1/8W		±5%	ECR
R815	Chip resistor	100k ohm	1/10W		±5%	ECR
Q801, 802, 804	Transistor 2SC2814(F4) or equivalent					ETTC
Q803	FET 2SK163(M) or equivalent					ETTF
IC801	IC LA1135(AM)					ETI-148
	Shield cover					

In order to obtain maximum tuner performance, values of * marked capacitors of C811, C813, C823 and C824 will be fluctuated with following values.

C811, 813, 823	0 – 20pF
C824	360 – 430pF

FM RF CIRCUIT BOARD COMPONENT LOCATION GUIDE

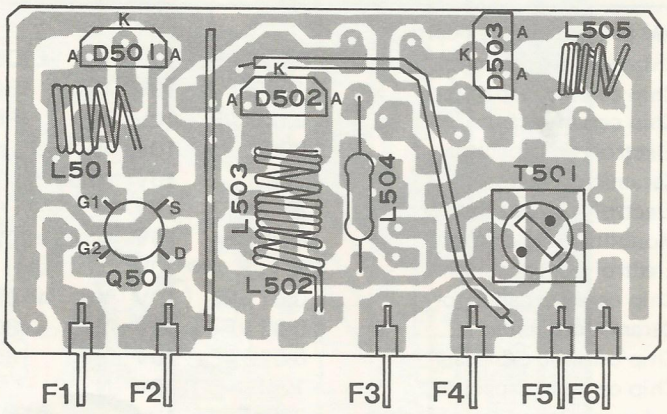

TOP VIEW

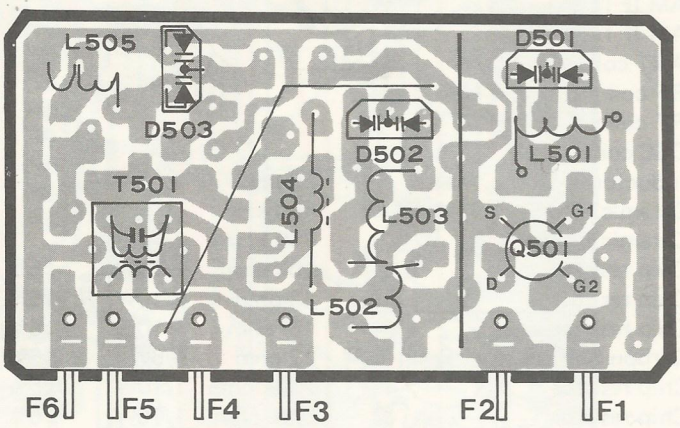

BOTTOM VIEW

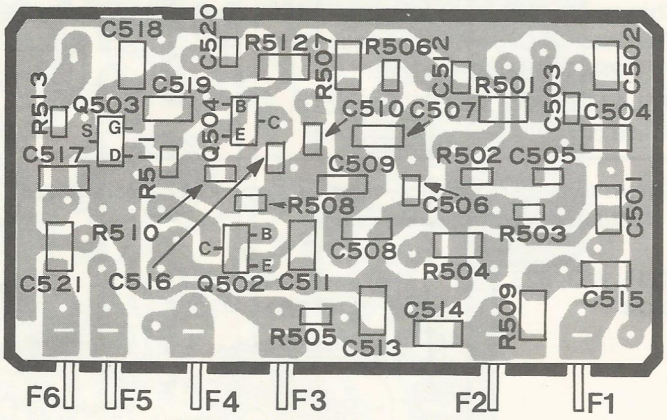

BOTTOM VIEW

Ref. No. 27 AR-68 FM RF CIRCUIT BOARD PARTS LIST

REF. NO.	DESCRIPTION					PART NO.
–	FM RF printed circuit board					
C501	Chip ceramic capacitor	20pF	10V		±20%	ECC
C502, 511	Chip ceramic capacitor	22pF	10V		±20%	ECC
C503	* Chip ceramic capacitor	2pF	10V		±20%	ECC
C504, 508, 509, 521	Chip ceramic capacitor	5pF	10V		±20%	ECC
C505	Chip ceramic capacitor	8pF	10V		±20%	ECC
C506	Chip ceramic capacitor	24pF	10V		±20%	ECC
C507	* Chip ceramic capacitor	0.5pF	10V	NPO	±0.25pF	ECC
C510	Chip ceramic capacitor	220pF	10V		±10%	ECC
C512	Chip ceramic capacitor	0.0047 μF	10V		+80/-20%	ECC
C513, 514, 515, 517	Chip ceramic capacitor	0.022 μF	10V		+80/-20%	ECC
C516	Chip ceramic capacitor	2pF	10V		±20%	ECC
C518	* Chip ceramic capacitor	5pF	10V	N750	±20%	ECC
C519	Chip ceramic capacitor	1pF	10V	N750	±20%	ECC
C520	Chip ceramic capacitor	56pF	10V	N470	±5%	ECC
D501, 502, 503	Variable capacitance diode 1SV103					ETD
L501	ANT coil					
L502	RF coil					
L503	RF coil					
L504	Choke coil 1 μH					
L505	OSC coil					
Q501	FET 3SK101(GR)					ETTF
Q502, 504	Transistor 2SC2714(R) or equivalent					ETTC
Q503	FET 2SK210(Y) or equivalent					ETTF
R501	Chip resistor	33K ohm	1/8W		±5%	ECR
R502	Chip resistor	470K ohm	1/10W		±5%	ECR
R503	Chip resistor	100K ohm	1/10W		±5%	ECR
R504	Chip resistor	47 ohm	1/8W		±5%	ECR
R505	Chip resistor	100 ohm	1/10W		±5%	ECR
R506	Chip resistor	33K ohm	1/10W		±5%	ECR
R507	Chip resistor	470K ohm	1/8W		±5%	ECR
R508, 511	Chip resistor	680K ohm	1/10W		±5%	ECR
R509	Chip resistor	10K ohm	1/8W		±5%	ECR
R510	Chip resistor	820 ohm	1/10W		±5%	ECR
R512	Chip resistor	2.7K ohm	1/8W		±5%	ECR
R513	Chip resistor	22 ohm	1/10W		±5%	ECR
T501	FM IFT					
–	Shield case					
–	Shield cover					
–	Shield plate					

In order to obtain maximum tuner performance, values of * marked capacitors of C503, C507 and C518 will be fluctuated with following values.

C503	0.5 – 8pF
C507	0 – 8pF
C518	1 – 8pF

FM CIRCUIT BOARD COMPONENT LOCATION GUIDE

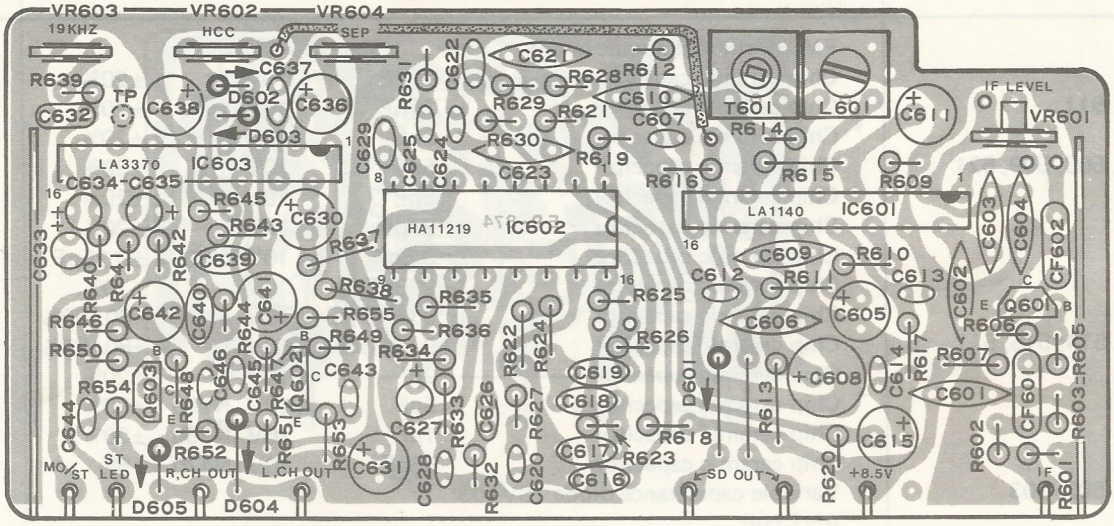

TOP VIEW

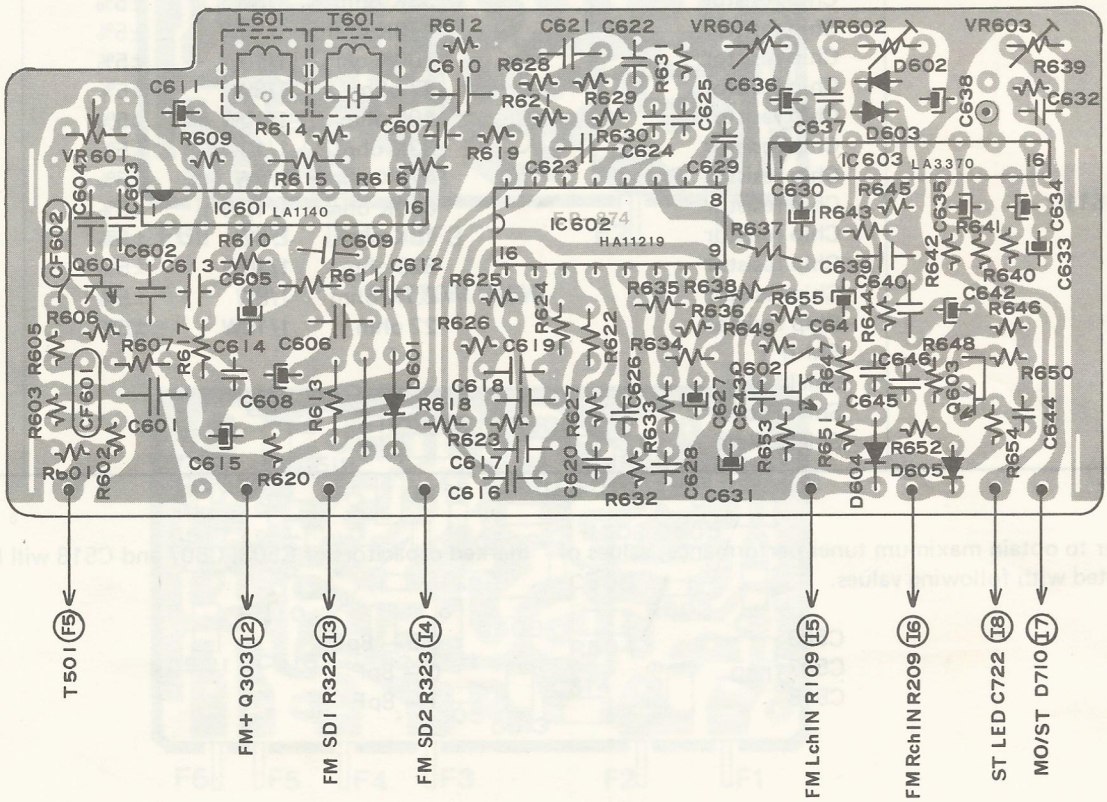

BOTTOM VIEW

FM CIRCUIT BOARD COMPONENT LOCATION GUIDE

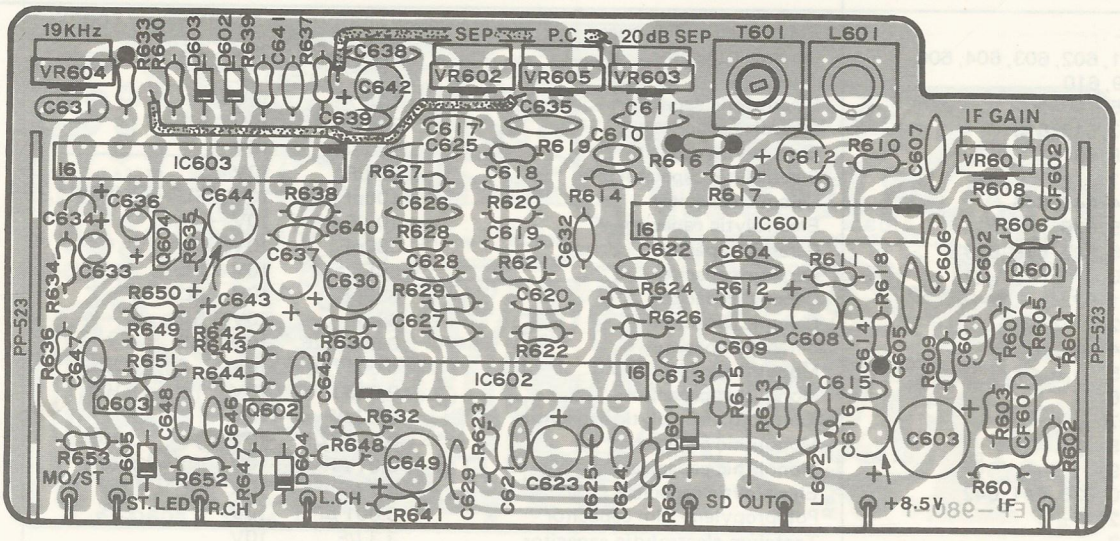

TOP VIEW

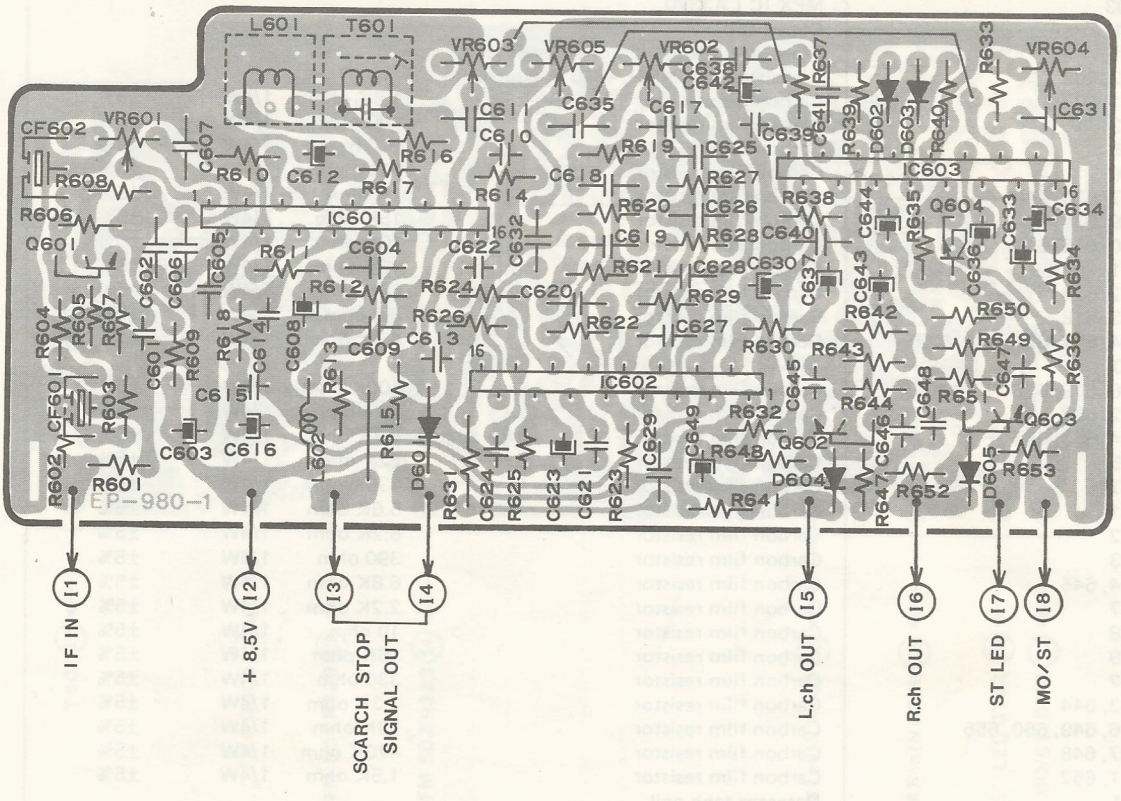

BOTTOM VIEW

REF. NO. 22 CRP-158-1 FM CIRCUIT BOARD ASSEMBLY PARTS LIST

REF. NO.	DESCRIPTION					PART NO.
—	FM printed circuit board					EP-980-1
C601	Monolithic capacitor	0.022μF	16V	±20%		ECC
C602, 604, 605, 606, 607, 609, 611, 638	Monolithic capacitor	0.047μF	16V	±20%		ECC
C603, 630, 649	Electrolytic capacitor	100μF	10V			ECC
C608	Electrolytic capacitor	1μF	10V			ECC
C610, 613, 614	Ceramic capacitor	33pF	10V	SL		ECC
C612	Electrolytic capacitor	2.2μF	10V			ECC
C615, 646, 648	Ceramic capacitor	100pF	10V	SL		ECC
C616	Electrolytic capacitor	10μF	10V			ECC
C617, 618, 619, 620	Ceramic capacitor	270pF	10V	SL	±5%	ECC
C621, 622, 639	Monolithic capacitor	0.01μF	10V	±10%		ECC
C623	Electrolytic capacitor	22μF	10V			ECC
C624	Monolithic capacitor	0.0022μF	10V	±10%		ECC
C625, 626	Ceramic capacitor	680pF	10V	SL	±5%	ECC
C627	Ceramic capacitor	68pF	10V	SL		ECC
C628	Ceramic capacitor	0.0012μF	10V	YB		ECC
C629	Monolithic capacitor	0.0068μF	10V	±20%		ECC
C631	Polypropylene film capacitor	0.001μF	10V	±5%		ECC
C632	Monolithic capacitor	0.0033μF	10V	±20%		ECC
C633	Tantalum electrolytic capacitor	3.3μF	10V			ECC
C634	Tantalum electrolytic capacitor	2.2μF	10V			ECC
C635	Monolithic capacitor	0.033μF	10V	±20%		ECC
C636	Tantalum electrolytic capacitor	1μF	10V			ECC
C637, 642, 643, 644	Electrolytic capacitor	4.7μF	10V			ECC
C640, 641	Monolithic capacitor	0.022μF	10V	±10%		ECC
C645, 647	Monolithic capacitor	0.0015μF	10V	±10%		ECC
CF601, 602	Ceramic filter 10.7MHz					EOP-10C
D601, 602, 603, 604, 605	Diode 1SS133 or equivalent					ETD
IC601	FM IF IC LA1140					ETI-83
IC602	NB IC LA2110					ETI-145
IC603	MPX IC LA3376					ETI-146
L601	Inductor 22μH					ELD-209
L602	Inductor 4.7μH					ELD-196
Q601	Transistor 2SC930(D) or equivalent					ETTC
Q602, 603, 604	Transistor 2SC2458L(BL) or equivalent					ETTC
R601, 603	Carbon film resistor 1.8k ohm	1/6W	±5%			ECR
R602	Carbon film resistor 150 ohm	1/6W	±5%			ECR
R604, 608, 636	Carbon film resistor 330 ohm	1/6W	±5%			ECR
R605, 619, 620, 637	Carbon film resistor 2.2k ohm	1/6W	±5%			ECR
R606, 607, 609, 634	Carbon film resistor 1k ohm	1/6W	±5%			ECR
R610, 616, 633	Carbon film resistor 15k ohm	1/6W	±5%			ECR
R611	Carbon film resistor 10k ohm	1/6W	±5%			ECR
R612, 617	Carbon film resistor 12k ohm	1/6W	±5%			ECR
R613, 615, 623, 635	Carbon film resistor 100k ohm	1/6W	±5%			ECR
R614	Carbon film resistor 68k ohm	1/6W	±5%			ECR
R618, 627, 628, 629	Carbon film resistor 4.7k ohm	1/6W	±5%			ECR
R621, 648, 653	Carbon film resistor 2.7k ohm	1/6W	±5%			ECR
R622, 630	Carbon film resistor 22k ohm	1/6W	±5%			ECR
R624	Carbon film resistor 820 ohm	1/6W	±5%			ECR
R625	Carbon film resistor 47k ohm	1/6W	±5%			ECR
R626, 640	Carbon film resistor 6.8k ohm	1/6W	±5%			ECR
R631	Carbon film resistor 3.9k ohm	1/6W	±5%			ECR
R632	Carbon film resistor 10 ohm	1/6W	±5%			ECR
R638, 639	Carbon film resistor 3.3k ohm	1/6W	±5%			ECR
R641	Carbon film resistor 22 ohm	1/6W	±5%			ECR
R642, 650	Carbon film resistor 470k ohm	1/6W	±5%			ECR
R643, 644, 649, 651	Carbon film resistor 33k ohm	1/6W	±5%			ECR
R647, 652	Carbon film resistor 1.5k ohm	1/6W	±5%			ECR
T601	Detector tank coil					ELD-210
VR601	Trimmer resistor 330 ohm B					ECRV-358
VR602	Trimmer resistor 10k ohm B					ECRV-362
VR603	Trimmer resistor 22k ohm B					ECRV-363
VR604	Trimmer resistor 4.7k ohm B					ECRV-361
VR605	Trimmer resistor 47k ohm B					ECRV-364
	Holder — PC board					PP-523

This CRP-158-1 is used for the unit with Serial Number 140000551 onwards (GMH), Serial Number 141000001 onwards (Eurovox), Serial Number 142000001 onwards (Alfa Romeo), Serial Number 143000001 onwards (PORSCHE) and Serial Number 144000001 onwards (BMW).

+ REAR CHANNEL AUDIO OUTPUT

DOLBY NR CIRCUIT BOARD COMPONENT LOCATION GUIDE

out 7/12
in 3/4

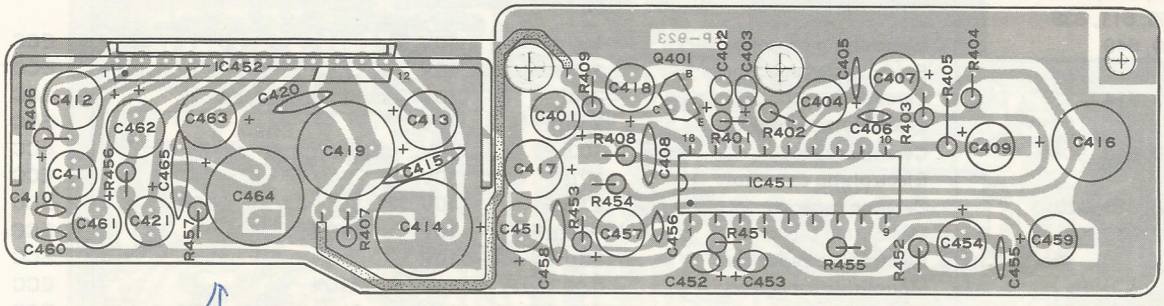

REAR CHANNEL IC'S

TOP VIEW

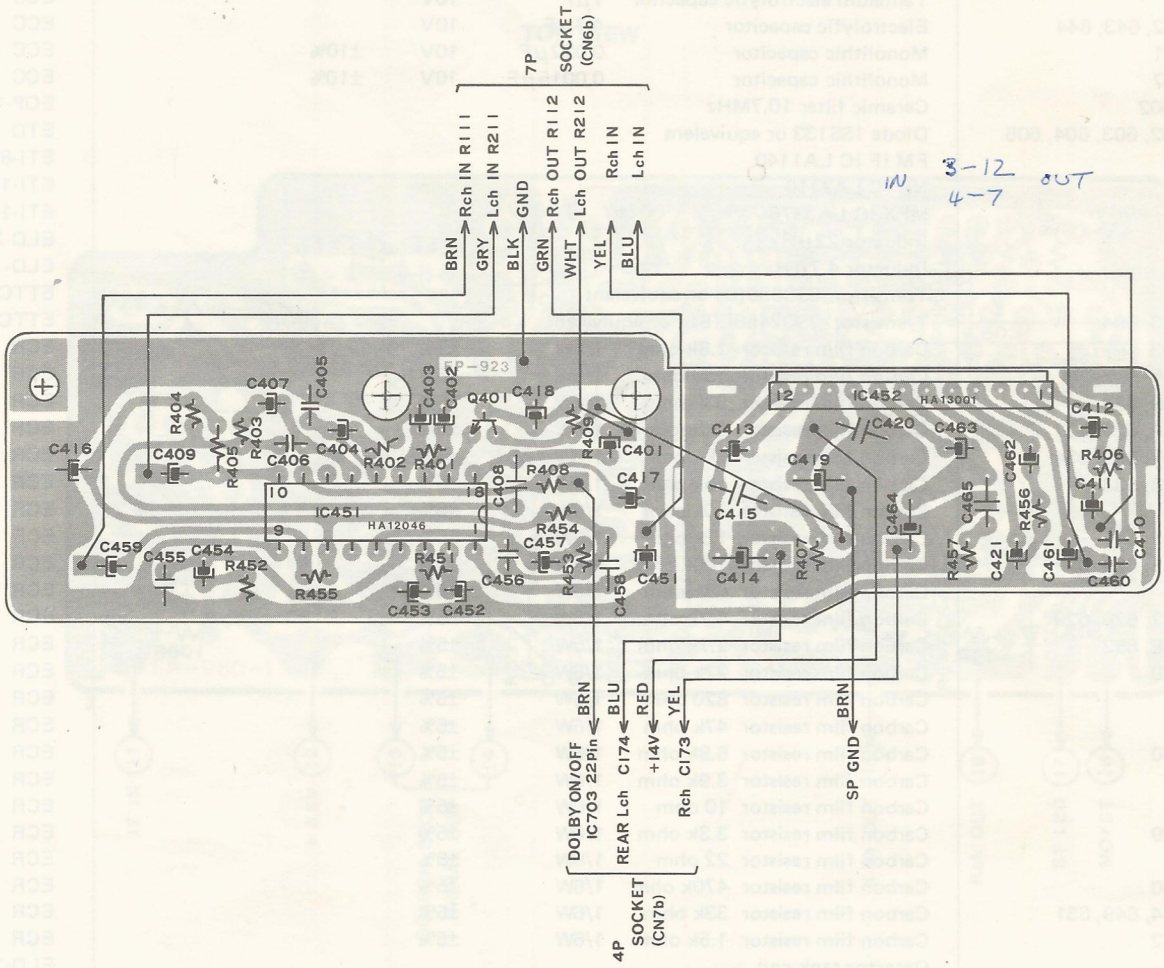

BOTTOM VIEW

REF. NO. 39 CAP-282 DOLBY NR CIRCUIT BOARD ASSEMBLY PARTS LIST

REF. NO.	DESCRIPTION				PART NO.
–	Dolby NR printed circuit board				EP-923
C401, 404, 409, 411, 451, 454, 459, 461	Electrolytic capacitor 1μF	10V			ECC
C402, 452	Tantalum electrolytic capacitor	1μF	10V		ECC
C403, 453	Tantalum electrolytic capacitor	0.33μF	10V		ECC
C405, 455	Monolithic capacitor	0.018μF	10V	±10%	ECC
C406, 456	Monolithic capacitor	0.0047μF	10V	±10%	ECC
C407, 457	Electrolytic capacitor 4.7μF	10V			ECC
C408, 458	Monolithic capacitor	0.033μF	10V	±10%	ECC
C410, 460	Monolithic capacitor	0.001μF	10V	±20%	ECC
C412, 413, 462, 463	Electrolytic capacitor	100μF	10V		ECC
C414, 464	Electrolytic capacitor	1000μF	10V		ECC
C415, 465	Monolithic capacitor	0.1μF	25V	±20%	ECC
C416	Electrolytic capacitor	220μF	10V		ECC
C417, 421	Electrolytic capacitor	22μF	16V		ECC
C418	Electrolytic capacitor	33μF	16V		ECC
C419	Electrolytic capacitor	470μF	16V		ECC
C420	Monolithic capacitor	0.047μF	25V	±20%	ECC
IC451	Dolby NR IC HA12046				ETI-109
IC452	Power amplifier IC HA13001				ETI-106
Q401	Transistor 2SC2458L(BL) or equivalent				ETTC
R401, 403, 451, 453	Carbon film resistor 47k ohm	1/4W	±5%		ECR
R402, 452	Carbon film resistor 6.2k ohm	1/4W	±5%		ECR
R404, 409, 454	Carbon film resistor 3.3 k ohm	1/4W	±5%		ECR
R405, 408, 455	Carbon film resistor 10k ohm	1/4W	±5%		ECR
R406, 456	Carbon film resistor 100 ohm	1/4W	±5%		ECR
R407, 457	Carbon film resistor 1 ohm	1/4W	±5%		ECR
–	Holder – Power amplifier IC				PL-2778

MECHANISM CONTROL CIRCUIT BOARD COMPONENT LOCATION GUIDE

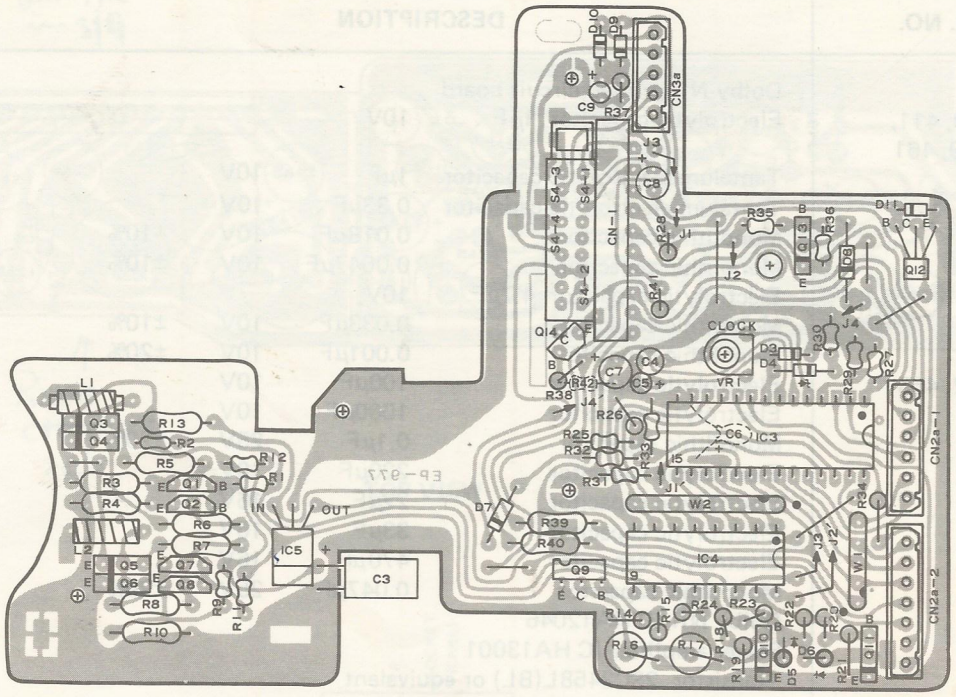

TOP VIEW

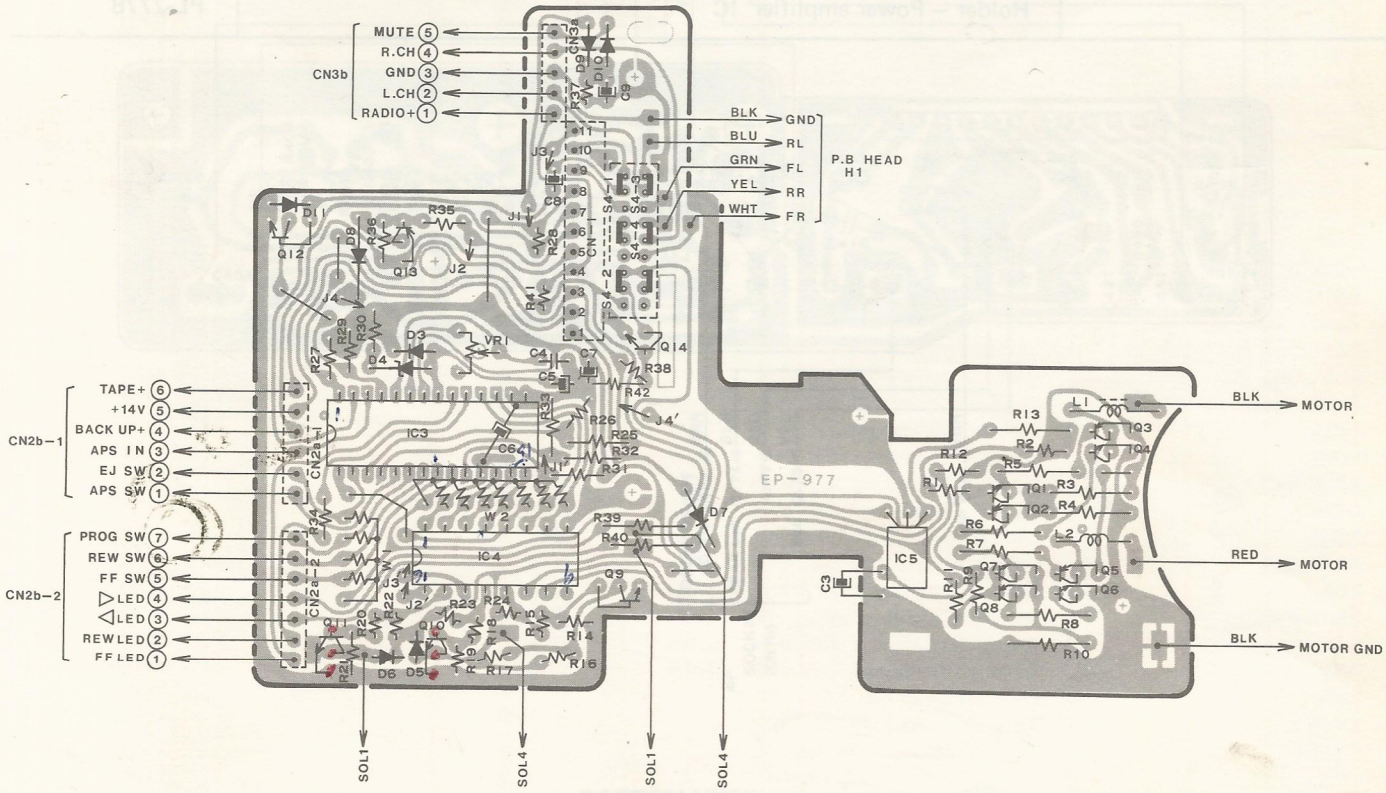

BOTTOM VIEW

REF. NO. 103 CAP-280 MECHANISM CONTROL CIRCUIT BOARD ASSEMBLY PARTS LIST

REF. NO.	DESCRIPTION				PART NO.
–	Mechanism control printed circuit board				EP-977
C3	Electrolytic capacitor	470μF	16V		ECC
C4	Polystylene film capacitor	180pF			ECC
C5	Tantalum electrolytic capacitor	1μF	10V		ECC
C6	Tantalum electrolytic capacitor	3.3μF	10V		ECC
C7	Electrolytic capacitor	10μF	10V		ECC
C8	Electrolytic capacitor	1μF	50V		ECC
C9	Tantalum electrolytic capacitor	4.7μF	10V		ECC
CN1	11P Socket				ESC-95
CN2a-1	6P Connector				ESP-89
CN2a-2	7P Connector				ESP-88
CN3a	5P Connector				ESP-111
D3, 9, 10, 11	Diode 1SS133 or equivalent				ETD
D4	Zener diode HZ3 (A1) or equivalent				ETD
D5, 6, 7, 8	Diode DS135(D) or equivalent				ETD
IC3	Mechanism control IC LM6416E-433				ETI-153
IC4	Transistor array M54517P				ETI-57
IC5	Regulator IC μPC78L05				ETI-58
L1	Choke coil				ELD-145
L2	Choke coil				ELA-33
Q1, 7, 12, 14	Transistor 2SC2603(E) or equivalent				ETTC
Q2, 8	Transistor 2SA1115(E) or equivalent				ETTA
Q3, 5, 13	Transistor 2SB822(R) or equivalent				ETTB
Q4, 6, 9, 10, 11	Transistor 2SC2673(Q) or equivalent				ETTC
R1, 11, 25, 26, 27, 28, 29, 30, 32, 33, 36, 37, 38, 41	Carbon film resistor	10k ohm	1/6W	±5%	ECR
R2, 12, 42	Carbon film resistor	2.2k ohm	1/6W	±5%	ECR
R3, 4, 10, 22, 23, 24	Carbon film resistor	1k ohm	1/4W	±5%	ECR
R5, 6, 7, 8	Carbon film resistor	470 ohm	1/4W	±5%	ECR
R9, 31, 35	Carbon film resistor	1k ohm	1/6W	±5%	ECR
R13	Carbon film resistor	2.2 ohm	1/2W	±5%	ECR
R14, 15, 18, 19, 20, 21, 34	Carbon film resistor	330 ohm	1/4W	±5%	ECR
R16, 17	Carbon film resistor	100 or 110 ohm	2W	±5%	ECR
R39, 40	Carbon film resistor	330 ohm	1/6W	±5%	ECR
S4-1 ~ S4-4	Slide switch				ESS-201
VR1	Trimmer resistor	22k ohm B			ECRV-396
W1	Resistor array	10k ohm	1/8W	±5%	ECX-19
W2	Resistor array	10k ohm	1/8W	±5%	ECX-20

This CAP-280 is only applicable to the limited quantity of the units with the serial numbers up to 140000550 (GMH).

MECHANISM CONTROL CIRCUIT BOARD COMPONENT LOCATION GUIDE

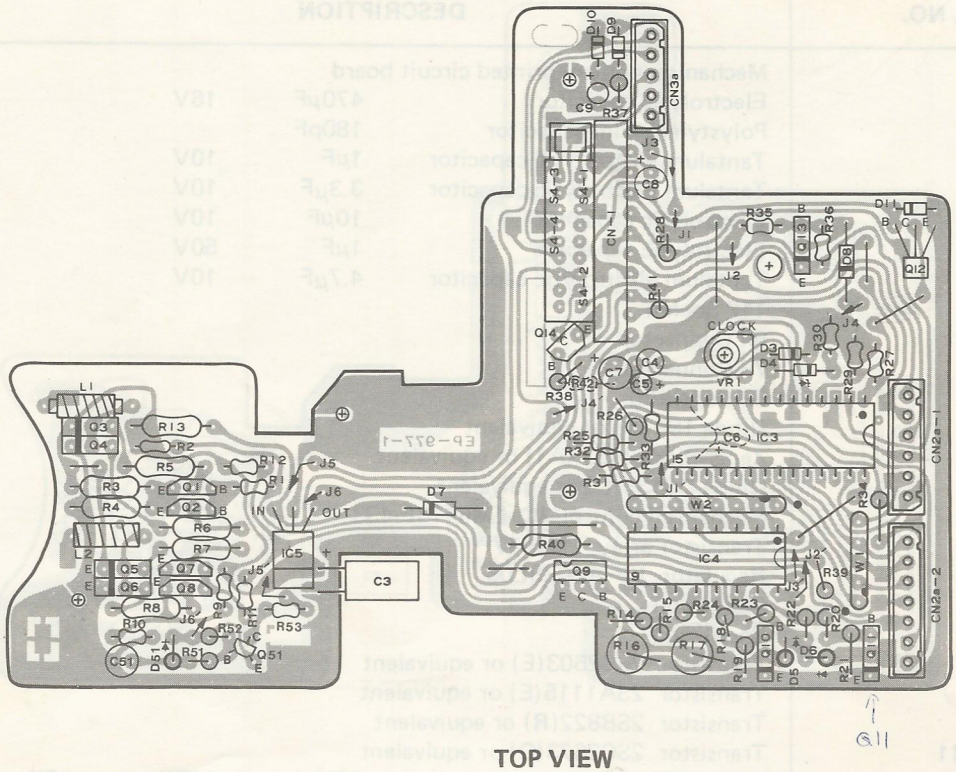

TOP VIEW

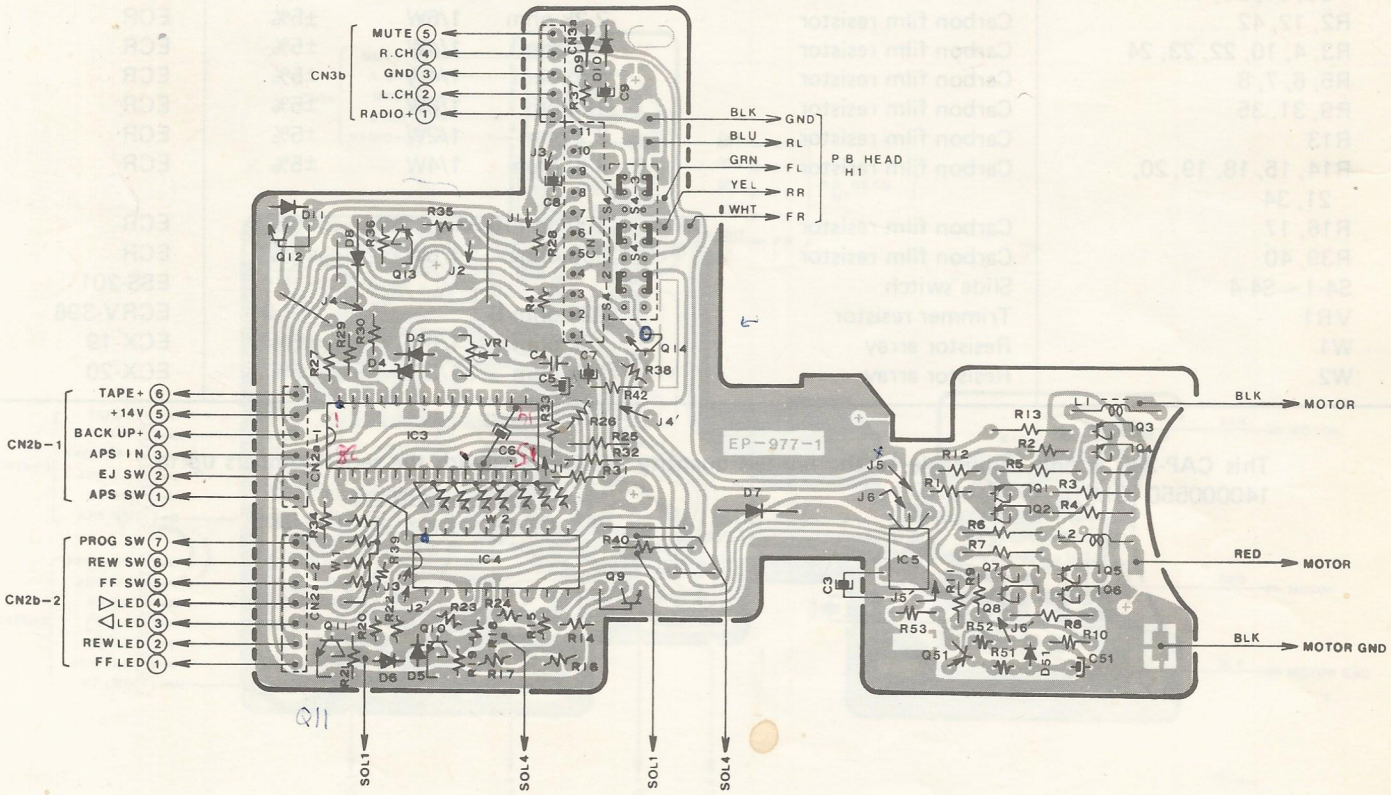

BOTTOM VIEW

REF. NO. 103 CAP-280-1 MECHANISM CONTROL CIRCUIT BOARD ASSEMBLY PARTS LIST

REF. NO.	DESCRIPTION				PART NO.
–	Mechanism control printed circuit board				EP-977-1
C3	Electrolytic capacitor	470μF	16V		ECC
C4	Polystylene film capacitor	180pF			ECC
C5	Tantalum electrolytic capacitor	1μF	10V		ECC
C6	Tantalum electrolytic capacitor	3.3μF	10V		ECC
C7, 51	Electrolytic capacitor	10μF	10V		ECC
C8	Electrolytic capacitor	1μF	50V		ECC
C9	Tantalum electrolytic capacitor	4.7μF	10V		ECC
CN1	11P Socket				ESC-95
CN2a-1	6P Connector				ESP-89
CN2a-2	7P Connector				ESP-88
CN3a	5P Connector				ESP-111
D3, 9, 10, 11, 51	Diode 1SS133 or equivalent				ETD
D4	Zener diode HZ3(A1) or equivalent				ETD
D5, 6, 7, 8	Diode DS135(D) or equivalent				ETD
IC3	Mechanism control IC LM6416E-433				ETI-153
IC4	Transistor array M54517P				ETI-57
IC5	Regulator IC μPC78L05				ETI-58
L1	Choke coil				ELD-145
L2	Choke coil				ELA-33
Q1, 7, 12, 14	Transistor 2SC2603(E) or equivalent				ETTC
Q2, 8, 51	Transistor 2SA1115(E) or equivalent				ETTA
Q3, 5, 13	Transistor 2SB822(R) or equivalent				ETTB
Q4, 6, 9, 10, 11	Transistor 2SC2673(Q) or equivalent				ETTC
R1, 11, 25, 26, 27, 28, 29, 30, 32, 33, 36, 37, 38, 41	Carbon film resistor 10k ohm	1/6W	±5%		ECR
R2, 12, 42	Carbon film resistor 2.2k ohm	1/6W	±5%		ECR
R3, 4, 22, 23, 24	Carbon film resistor 1k ohm	1/4W	±5%		ECR
R5, 6, 7, 8	Carbon film resistor 470 ohm	1/4W	±5%		ECR
R9, 10, 31, 35, 53	Carbon film resistor 1k ohm	1/6W	±5%		ECR
R13	Carbon film resistor 2.2 ohm	1/2W	±5%		ECR
R14, 15, 18, 19, 20, 21, 34, 39, 40	Carbon film resistor 330 ohm	1/4W	±5%		ECR
R16, 17	Carbon film resistor 100 or 110 ohm		2W	±5%	ECR
R51	Carbon film resistor 68k ohm	1/6W	±5%		ECR
R52	Carbon film resistor 47k ohm	1/6W	±5%		ECR
S4–1 ~ S4–4	Slide switch				ESS-201
VR1	Trimmer resistor 22k ohm B				ECRV-396
W1	Resistor array 10k ohm	1/8W	±5%		ECX-19
W2	Resistor array 10k ohm	1/8W	±5%		ECX-20

This CAP-280-1 is used for the unit with Serial Number 140000551 onwards (GMH), Serial Number 141000001 onwards (Eurovox), Serial Number 142000001 onwards (Alfa Romeo), Serial Number 143000001 onwards (PORSCHE) and Serial Number 144000001 onwards (BMW).

TAPE END SENSOR CIRCUIT BOARD COMPONENT LOCATION GUIDE

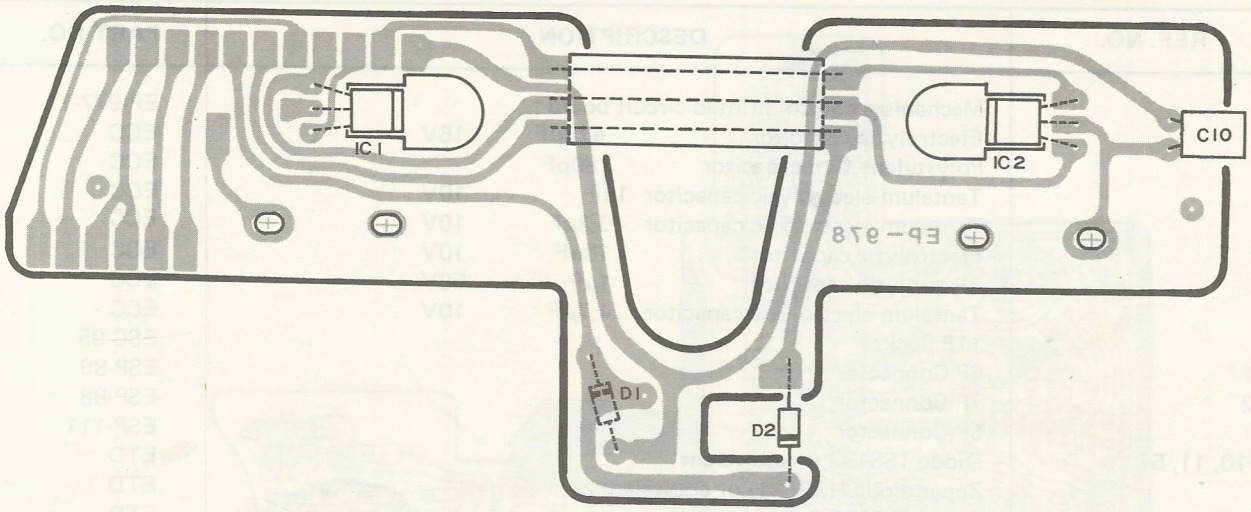

TOP VIEW

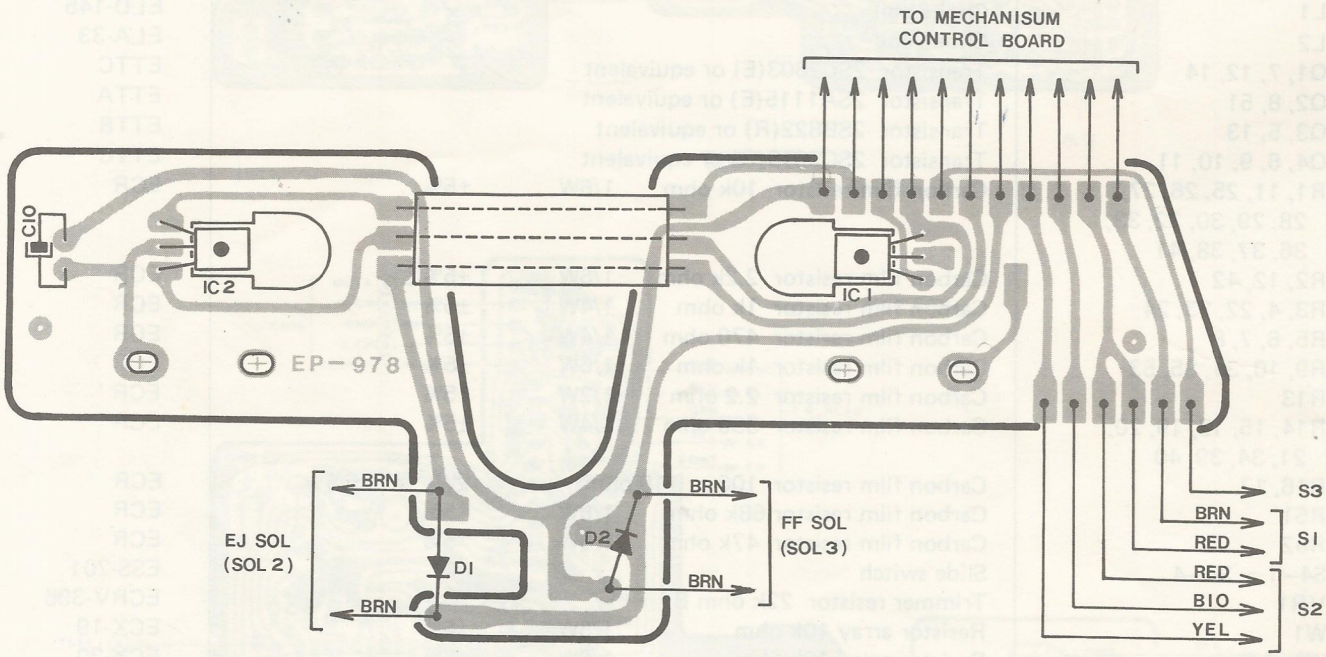

BOTTOM VIEW

REF. NO. 105 CAP-281 TAPE END SENSOR CIRCUIT BOARD ASSEMBLY PARTS LIST

REF. NO.	DESCRIPTION	PART NO.
–	Tape end sensor printed circuit board	EP-978
C10	Electrolytic capacitor 4.7μF 25V	ECC
D1, 2	Diode DS135(D) or equivalent	ETD
IC1, 2	Hall IC DN6835	ETI-103
	Flat cable	WX-48

This CAP-281 is only applicable to the limited quantity of the units with the serial numbers up to 140000550 (GMH).

TAPE END SENSOR CIRCUIT BOARD COMPONENT LOCATION GUIDE

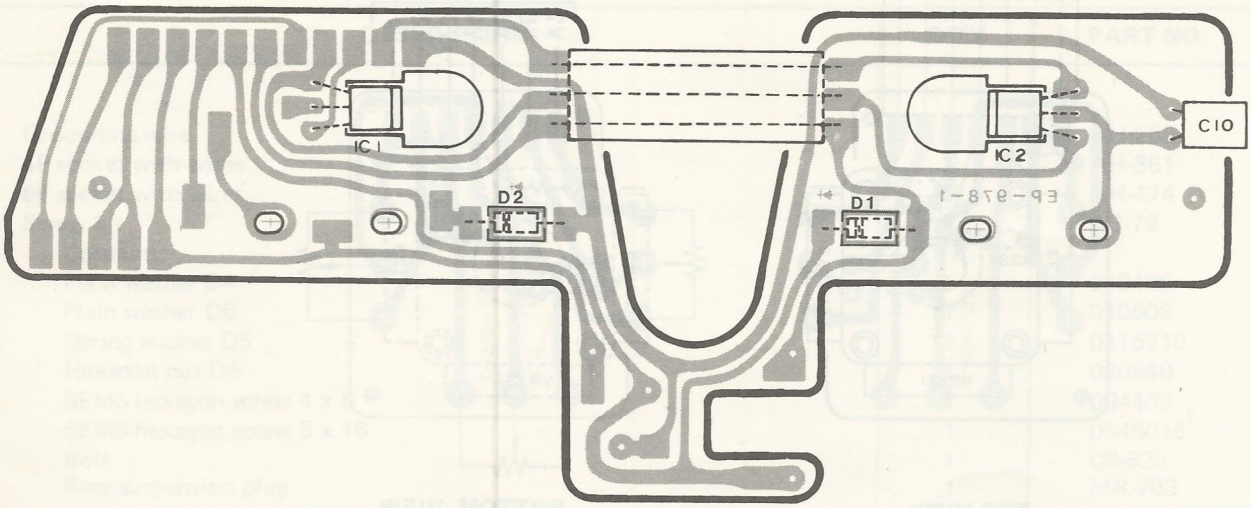

TOP VIEW

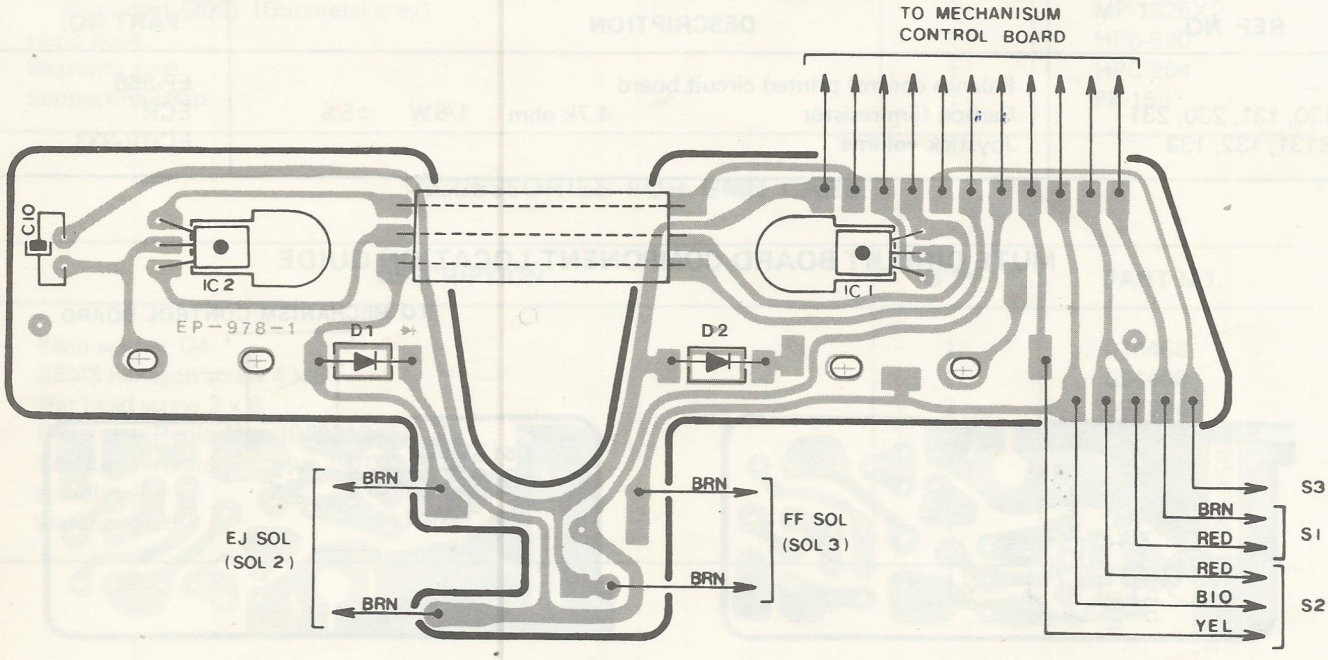

BOTTOM VIEW

REF. NO. 105 CAP-281-1 TAPE END SENSOR CIRCUIT BOARD ASSEMBLY PARTS LIST

REF. NO.	DESCRIPTION	PART NO.
–	Tape end sensor printed circuit board	EP-978-1
C10	Electrolytic capacitor 4.7μF 25V	ECC
D1, 2	Diode DS135(D) or equivalent	ETD
IC1, 2	Hall IC DN6835	ETI-103
	Flat cable	WX-48

This CAP-281-1 is used for the unit with Serial Number 140000551 onwards (GMH), Serial Number 141000001 onwards (Eurovox), Serial Number 142000001 onwards (Alfa Romeo), Serial Number 143000001 onwards (PORSCHE) and Serial Number 144000001 onwards (BMW).

BALANCE CONTROL CIRCUIT BOARD COMPONENT LOCATION GUIDE

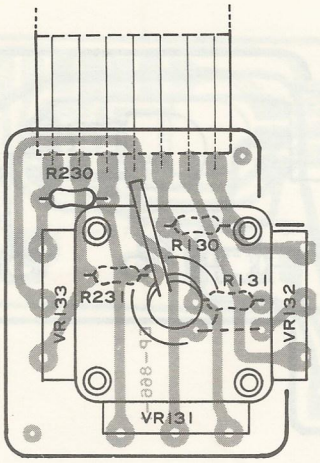

TOP VIEW

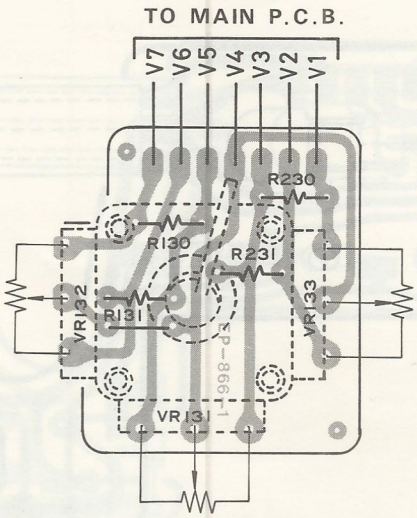

BOTTOM VIEW

REF. NO. 46 CAP-242 BALANCE CONTROL CIRCUIT BOARD ASSEMBLY PARTS LIST

REF. NO.	DESCRIPTION				PART NO.
—	Balance control printed circuit board				EP-866
R130, 131, 230, 231	Carbon film resistor	4.7k ohm	1/6W	±5%	ECR
VR131, 132, 133	Joystick volume				ECRV-333

MUTE CIRCUIT BOARD COMPONENT LOCATION GUIDE

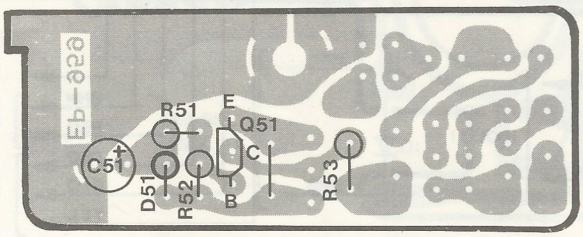

TOP VIEW

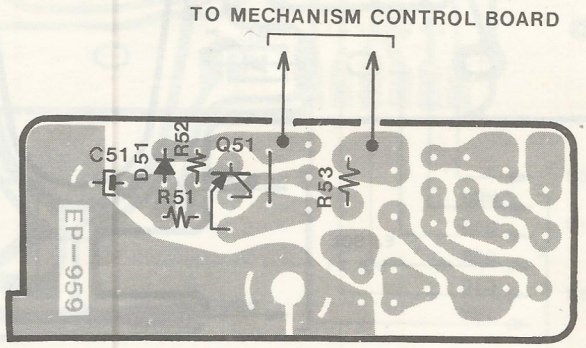

BOTTOM VIEW

CAP-284 MUTE CIRCUIT BOARD ASSEMBLY PARTS LIST

REF. NO.	DESCRIPTION				PART NO.
—	Printed circuit board				EP-959
C51	Electrolytic capacitor	10μF	16V		ECC
D51	Diode 1SS133 or equivalent				ETD
Q51	Transistor 2SA1115(E) or equivalent				ETTA
R51	Carbon film resistor	68k ohm	1/4W	±5%	ECR
R52	Carbon film resistor	47k ohm	1/4W	±5%	ECR
R53	Carbon film resistor	1k ohm	1/4W	±5%	ECR

This CAP-284 is only applicable to the limited quantity of the units with the serial numbers up to 140000550 (GMH).

ACCESSORY LIST

DESCRIPTION	Q'TY	PART NO.
EUROVOX version		
Grounding wire	1	AH-250
4P socket with wires	1	AH-361
6P socket with wires	1	AH-474
Screw kit	1	AS-79
Contains;		
Plain washer D4	1	010408
Plain washer D5	1	010508
Spring washer D5	1	0115210
Hexagon nut D5	1	020540
SEMS hexagon screw 4 x 8	1	094408
SEMS hexagon screw 5 x 16	1	0945016
Bolt	1	CS-525
Rear suspension plug	1	MR-203
Removal lever ass'y	1	CMT-113
Removal lever	2	PP-524
Side cover set	1	CMT-145
Side cover (180) (Gunmetal grey)	2	MP-1823X2
Side cover (200) (Gunmetal grey)	2	MP-1825X2
Hand book	1	HPB-690
Warranty card	1	HPC-204
Supporting strap	1	PP-159

ACCESSORIES FOR GMH CARS

DESCRIPTION	Q'TY	PART NO.
Plain washer D4	1	010468
SEMS hexagon screw 4 x 8	1	094408
Hat head screw 3 x 6	2	097306
Bracket – Radio Mtg. (92021248)	1	PL-2806
Bracket – Radio rear Mtg. (92023262)	1	PL-2889
Handbook	1	HPB-649
Waranty card	1	HPC-163

To identify size of motor pulley

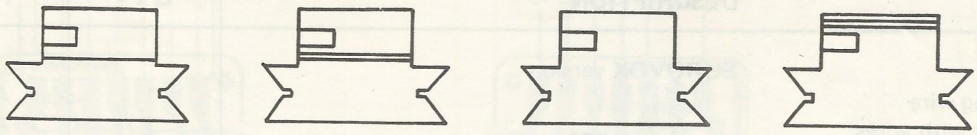

CS-481-1 CS-481-2 CS-481-3 CS-481-4

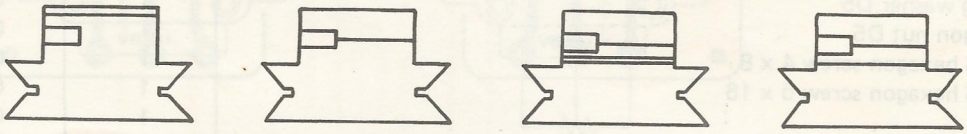

CS-481-5 CS-481-6 CS-481-7 CS-481-8

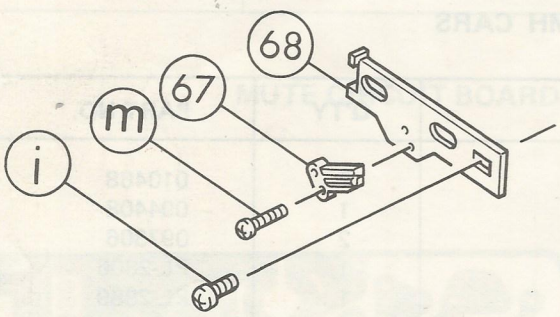

Before the Modification

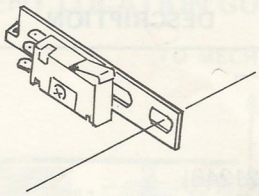

After the Modification

Micro switch ass'y	CMY-292
Micro switch	ESS-262
Switch holder	PL-2752X1
Pan head screw 1.7 x 6	006176
Flush head screw 2.6 x 3 (Precision type)	002263

This CMY-292 is used for the unit with Serial Number 140000551 onwards (GMH), Serial Number 141000001 onwards (Eurovox), Serial Number 142000001 onwards (Alfa Romeo), Serial Number 143000001 onwards (PORSCHE) and Serial Number 144000001 onwards (BMW).

NOTE: When you replace both the Skeleton switch ESS-232 (Ref. No. 67) and the Switch holder PL-2752 (Ref. No. 68) on MCC-2301R and MCC-2201R, please use the Micro switch ass'y CMY-292 (Micro switch ESS-262, Switch holder PL-2752X1 and a Screw 006176) with Flush head screw 002263 instead of Pan head screw 006263, as this modification results unavailability of old type of switch holder (PL-2752).

EXPLODED VIEW – MECHANISM

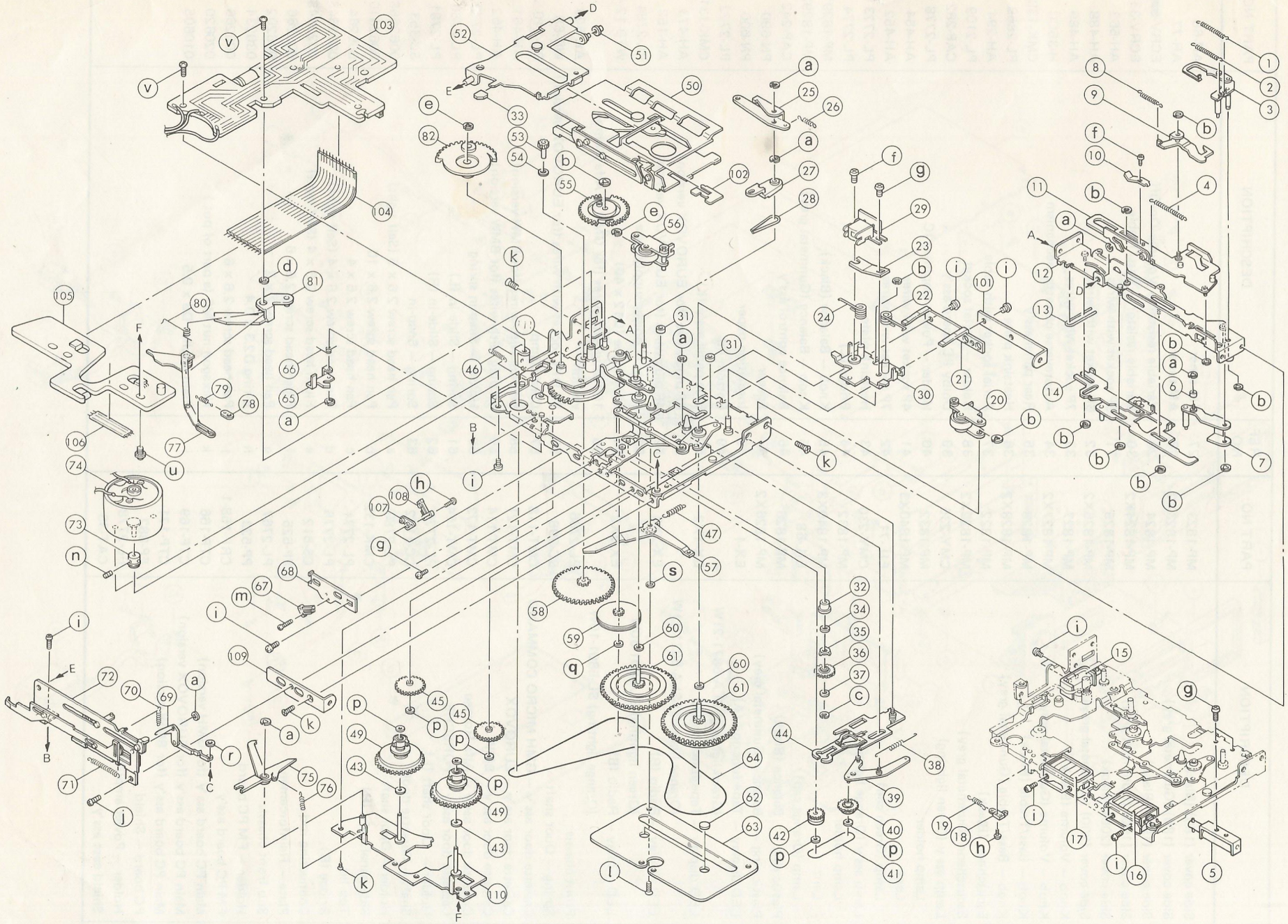

MECHANICAL PARTS LIST – MECHANISM

REF. NO.	DESCRIPTION	PART NO.	REF. NO.	DESCRIPTION	PART NO.
1	Spring	SC-323	62	Plastic plate – Capstan holding	PN-618
2	Spring	SC-320	63	Flywheel holder	PU-190
3	Lever lock guide ass'y	CMK-86	64	Main belt	MR-225
4	Spring	SC-321	65	Lock arm	PL-2750
5	Solenoid	ESR-75	66	Tension spring	ST-63
6	Roller – Head chassis movement	CC-1059	67	Skeleton switch	ESS-232
7	Arm ass'y – Head chassis movement	CMK-87	68	Switch holder	PL-2752
8	Spring	SC-322	69	Lock release arm ass'y	CMK-81
9	FF/REW actuation arm	PL-2481	70	Spring	SC-325
10	Arm – Cassette holding	PL-2452	71	Spring	SC-317
11	Eject lever ass'y	CMK-84	72	Cassette insertion mechanism ass'y	CMK-82
12	Eject base ass'y	CMK-83		Motor ass'y	CMY-247
13	Rod spring	ST-57	73	Motor pulley D11.10 mm	CS-481-1
14	Auto reverse lever ass'y	CMK-85	73	Motor pulley D11.15 mm	CS-481-2
15	Solenoid	ESR-67	73	Motor pulley D11.20 mm	CS-481-3
16	Solenoid	ESR-66	73	Motor pulley D11.25 mm	CS-481-4
17	Solenoid	ESR-66	73	Motor pulley D11.30 mm	CS-481-5
18	Contact piece	MP-1534	73	Motor pulley D11.05 mm	CS-481-6
19	Spring	SC-313	73	Motor pulley D11.00 mm	CS-481-7
20	Pinch roller ass'y	AA-737	73	Motor pulley D10.95 mm	CS-481-8
21	Holder – Head chassis	PL-2476	74	Motor	EMD-64
22	Pinch roller spring	ST-55	n	Slotted head screw 2.0 x 3	009203
23	Plate – Head adjustment	PL-2451	75	Lock arm ass'y	CMK-76
24	Pinch roller spring	ST-56	76	Spring	SC-315
25	Change-over arm	PL-2468	77	Cassette loading lever ass'y	CMK-128
26	Spring	SC-314	78	Hook – Spring	PP-519
27	Holder	MP-1529	79	Spring	SC-352
28	Tension spring	ST-57	80	Tension spring	ST-62
29	Autoreverse head	AHP-16A	81	Eject arm ass'y	CMK-78
30	Head chassis ass'y	CMK-75	82	Gear – Eject	MP-1531
31	Polyslider washer D2	PN-685	101	Mechanism holder (R)	PL-2783
32	Roller – FF/REW gear	CC-1100	102	Anti-shock plate	PL-2947
33	Plastic piece – Cassette tray	MP-1661	103	Mechanism control PC board ass'y	CAP-280-1
34	Polyslider washer D1.6 x 0.13	PN-608	104	Flat cable	WX-71
35	Tension plate spring	PL-2449	105	Tape end sensor PC board ass'y	CAP-281-1
36	FF/REW gear	MP-1522	106	Flat cable	WX-47
37	Polyslider washer D1.6 x 0.13	PN-608	107	Switch holder ass'y	CMK-150
38	Spring	SC-324	108	Skeleton switch	ESS-224
39	Arm ass'y – FF/REW gear	CMK-77	109	Mechanism holder (L)	PL-2782
40	FF/REW gear	MP-1521	110	Reel table chassis ass'y	CMK-155
41	Belt	MR-224	111	Main frame ass'y	CMK-154
42	FF/REW gear	MP-1533	a	E-ring D1.5 x 0.4	030154
43	Polyslider washer D2.05 x 0.25	PN-622	b	E-ring D1.9 x 0.4	030194
44	FF/REW lever set ass'y	CMK-74	c	E-ring D1.2 x 0.4	030124
45	Inter-action gear	MP-1528	d	E-ring D3.0 x 0.6	030306
46	Spring	SC-327	e	E-ring D2.3 x 0.4	030234
47	Spring	SC-312	f	Pan head screw 2 x 3	006203
49	Reel table ass'y	AA-731	g	Pan head screw 2 x 4	006204
50	Cassette tray ass'y	CMK-80	h	Pan head screw 2 x 6	006206
51	Roller – Tray arm	CC-1035	i	Pan head screw 2.6 x 3	006263
52	Cassette tray tilter ass'y	CMK-79	j	Pan head screw 2.6 x 4	002264
53	Transmission gear	CC-1034	k	Flush head screw 2.6 x 3 (Precision type)	076263
54	Polyslider washer D2.1 x 0.25	PN-531	l	Flush head screw 2.0 x 3	076203
55	Autoreverse gear	MP-1532	m	Pan head screw 1.7 x 5	006175
56	Pinch roller ass'y	AA-738	p	Polyslider washer D1.2 x 0.25	PN-514
57	FF/REW arm	PL-2466	q	Polyslider washer D1.6 x 0.25	PN-530
58	Main gear	MP-1530	r	Polyslider washer D2.1 x 0.25	PN-639
59	Transmission gear	MP-1520	s	E-ring D2.5 x 0.4	030254
60	Polyslider washer	PN-531	u	Hat head screw 2 x 3	097203
61	Flywheel	CC-1204	v	Pan head screw 2.6 x 5 (Self tight)	006265ST

SCHEMATIC DIAGRAM

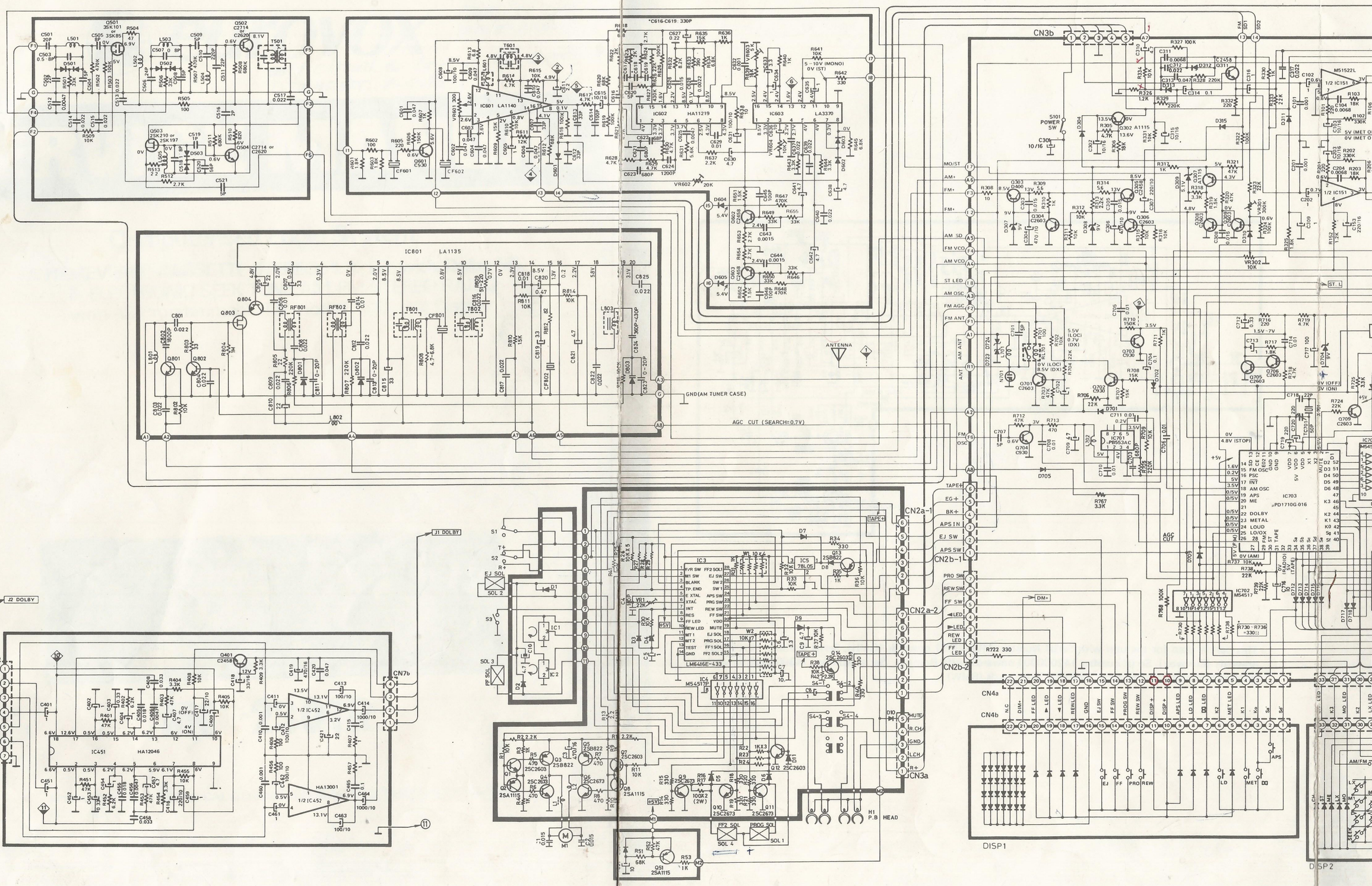

SCHEMATIC DIAGRAM

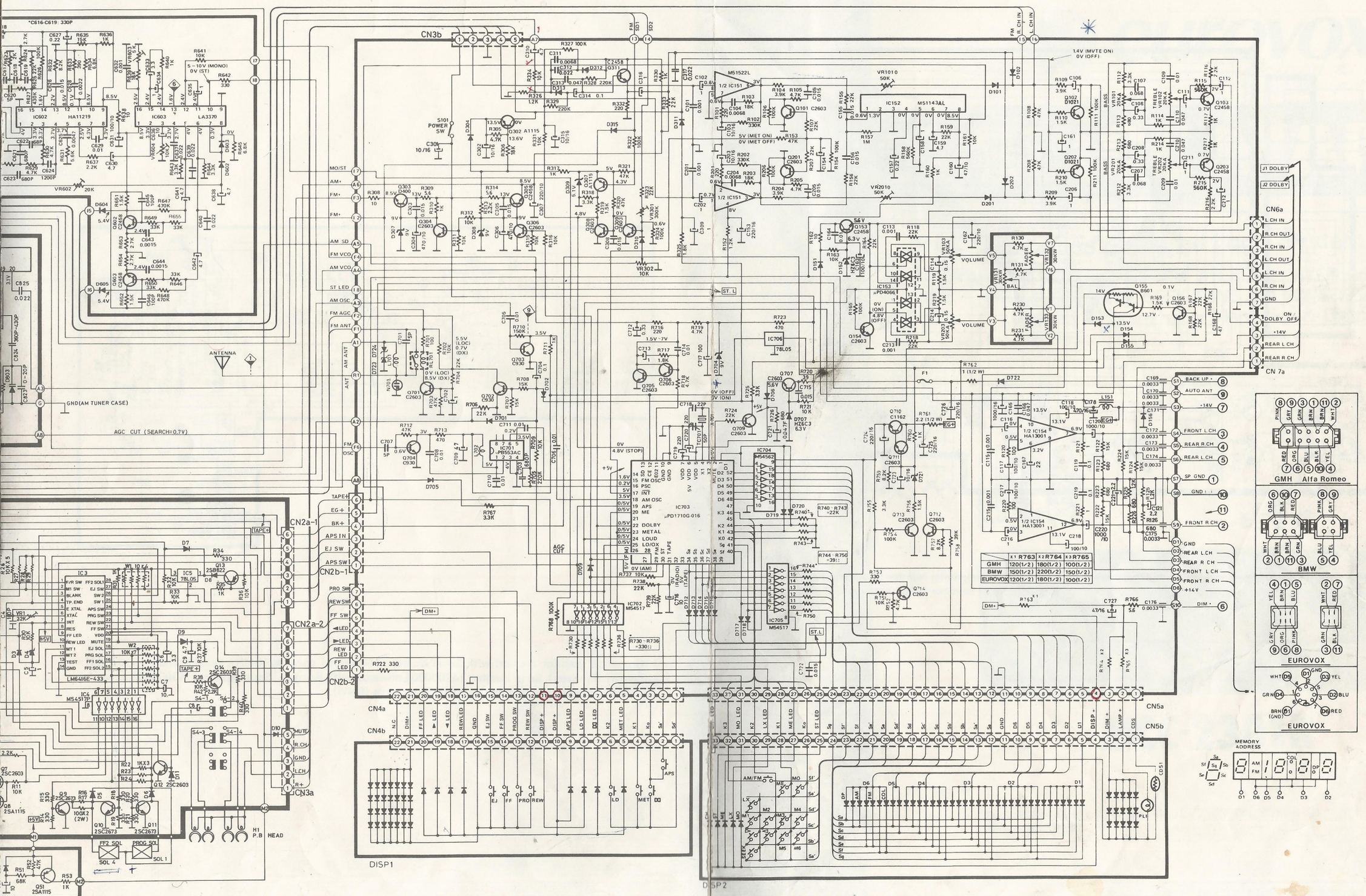

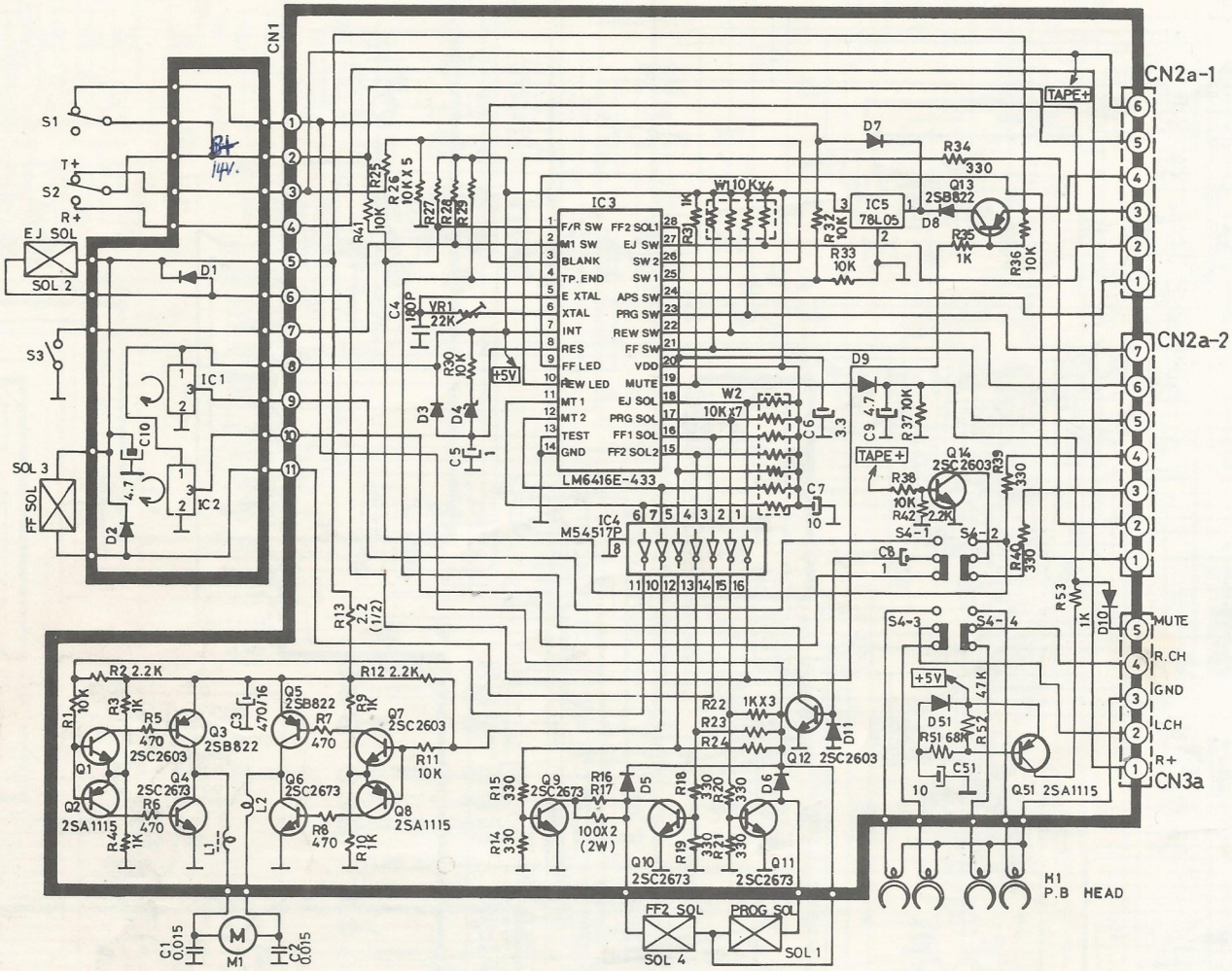

This part is used for the unit with Serial Number 140000551 onwards (GMH), Serial Number 141000001 onwards (Eurovox), Serial number 142000001 onwards (Alfa Romeo), Serial Number 143000001 onwards (PORSCHE) and Serial Number 144000001 onwards (BMW).

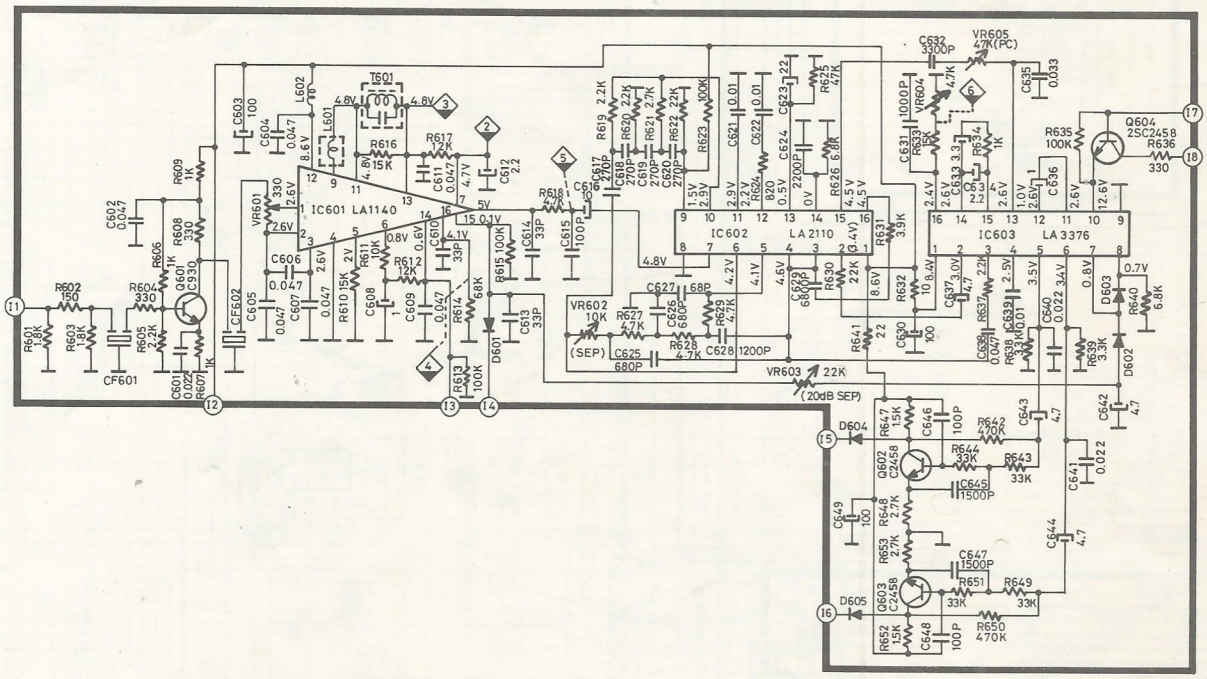

This part is used for the unit with Serial Number 140000551 onwards (GMH), Serial Number 141000001 onwards (Eurovox), Serial number 142000001 onwards (Alfa Romeo), Serial Number 143000001 onwards (PORSCHE) and Serial Number 144000001 onwards (BMW).