SANYO

Cassette Corder

MODEL M-38

SERVICE MANUAL

SANYO ELECTRIC CO., LTD.

INTERNATIONAL DIVISION : SANYO ELECTRIC TRADING CO., LTD.
OSAKA JAPAN

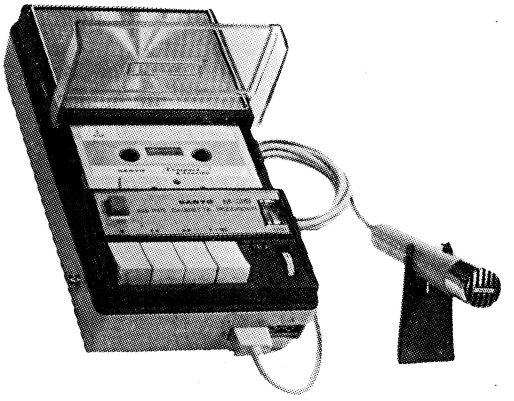

SPECIFICATIONS

Transistors	2SB303×1 2SB186×3 2SB22 ×2 2SC536×2
Diode	1S188×1
Thermistors	SDT-09×2
Recording system	Double track, AC bias (15 Kc) 200 to 400 μA
Erasing system	AC erase
Tape speed	$1\frac{7}{8}$ ips (4.75 cm/sec).
Recording time	30 minutes with single track 60 minutes with double track
Rewinding time	less than 2 minutes
Fast forward time	less than 2 minutes
Power output	maximum power output more than 550 mW at 10% distortion more than 250 mW
Recording tape	300 feet (90 m)·····length
Wow and flutter	better than 0.5% RMS
Signal-to-noise ratio	better than 43 db
Frequency response	100 cps to 6,000 cps within 7 db band
Operating temperature	0°C~40°C
Batteries	UM-2×5 pcs. (C size cell ×5)
Battery life	more than 12 hours
Terminals	Microphone···impedance 50K ohm sensitivity -75 db Aux ·····impedance 5.6K ohm Earphone·····impedance 8 ohm
Dimensions	$9\frac{1}{4}''$(L)×5″(W)×$2\frac{1}{2}''$(H) (233×126×64 mm)
Net weight	3.3 lbs. (1.5 Kg)

ADJUSTMENTS

(A) Adjusting Recording Bias

The following adjustments should be made after changing a recording/playback head, an erasing head a trap L-2 (Bias frequency) or the volume control variable resistor (VR-3).

1. Supply DC 7.5 V to the unit and set it for recording.
2. Connect both terminals of a vacuum tube volt meter (VTVM) with R5 (10 ohm) resistor in parallel as shown below. (See figs. 1, 2)

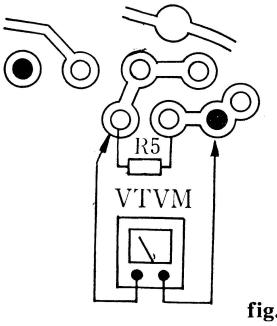

fig. 1

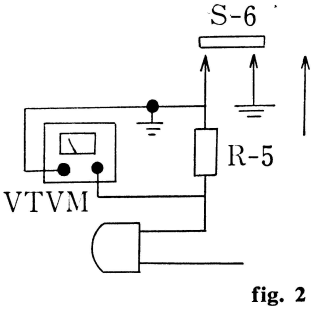

fig. 2

3. Adjust L-2 so as to fix the trap L-2 maximum pointer deflection.
4. Insert the cassette and set the volume knob to 6. (red mark on the panel)
5. Connect an audio generator to the microphone terminal and record two electric signals (600 cycles and 6,000 cycles) at 70 db input.
6. Connect an 8 ohm load resistor with the earphone terminal. Then playback the signal recorded. Turn the volume knob VR-3 (100K ohm) clockwise when the play-back signal of 600 cycles is stronger than that of 6,000 cycles, counter-clockwise when the 600-cycle signal output power is weaker. Repeat the above adjustment so that the signal out-put power at 6,000 cycles is lower than that at 600 cycles by 2 db.
7. Follow the steps from 1 to 6 when changing an erasing head, an RP head or a trap. When changing the VR-3, steps 4 to 6.

(B) Adjusting the Meter

The following adjustment should be made after changing the meter or the volume control variable resistor (VR-2B-100Kohm). Supply 5.5 V DC to the unit and set it for play-back.
Adjust the VR-2 (B 100K ohm) so that the pointer deflects as far as the limit between the red and black zones.

CIRCUIT BOARD DIAGRAM

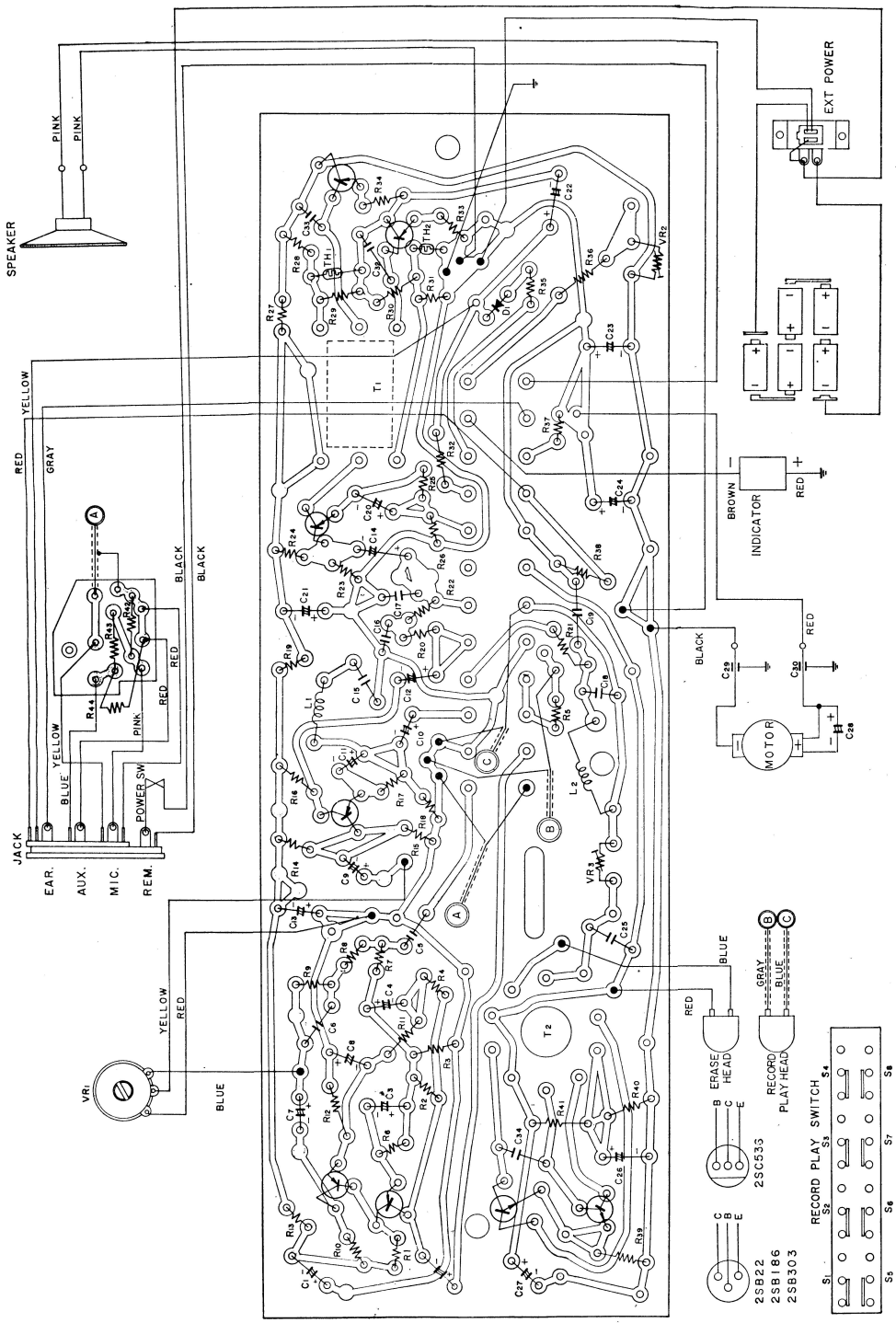

fig. 10

(C) Adjusting the Mechanism

1. Position of Pinch Roller

The space between the pinch roller stopper and pinch roller arm must be 0.7–1.2 mm when the PLAY button is pressed. If not, adjust the angle of the pinch roller stopper by bending it. (See fig. 3)

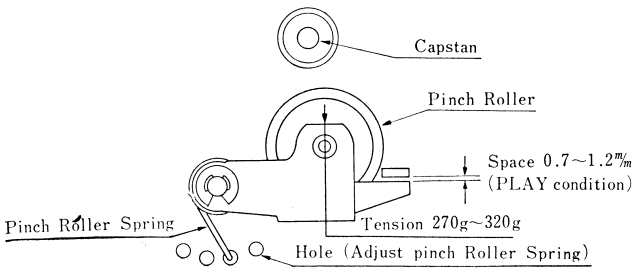

fig. 3

2. Pressing Force of Pinch Roller

When measuring the pressure of the pinch roller as shown in figure 3, the pressure of the pinch roller should be between 270 and 320 grams. If not, adjustment is possible by resetting the pinch roller spring into another hole.

3. Adjustment of Flywheel Support Plate

When the space between the flywheel hub and the receptacle on the support plate is either too narrow or too wide, adjust it to 0.15–0.4 mm by turning the screws on the side of the plate. (See fig. 4)

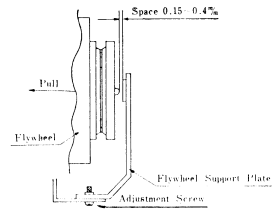

fig. 4

4. Adjustment of the Drive Roller

Appropriate pressure of the drive roller against the take-up reel should be 70–105 grams when the PLAY button is pressed. If not, adjust by resetting the take-up pulley spring into another hole. (See fig. 5)

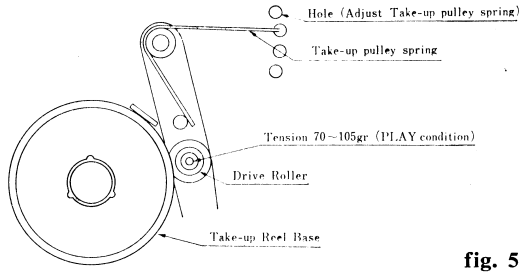

fig. 5

PARTS LIST

KEY NO.	PARTS NO.	DESCRIPTION	Q'ty
		MECHANISM CHASSIS	
1.	KR1-11184-17	Assembly, chassis	1
2.	KR4-11197	Bracket, Chassis Mounting	1
3.	KR-G1019	Control, Volume (With nut and washer)	1
4.	KR4-11210	Bracket, Volume Control Mounting	1
5.	KR4-16044	Spring, Cartridge	1
6.	KR-U1006	Indicator	1
7.	KR-36050	Cushion, Indicator	2
8.	KR4-36058	Rubber Sheet, Indicator	1
9.	KR4-36059	Cushion, Speaker	1
10.	KR-V1008	Speaker	1
11.	KR4-36052	Drive Belt	1
12.	KR4-11182-5	Assembly, Slide Base	1
13.	KR4-24030	Assembly, Pinch Roller and Arm	1
14.	KR-16043	Spring, Pinch Roller Arm	1
15.	KR-H1014	Assembly, Erase Head	1
16.	KR-H1013	Assembly, Record Head	1
17.	KR4-11194	Terminal, Erase Head	1
18.	KR4-16020	Spring, Record/Play Head	1
19.	KR4-11195	Holder, Steel Ball	2
20.	KR4-11199	Spring Slide Base Hold	2
21.	KR-11159	Steel Ball	6
22.	KR4-11170-3	Assembly, Slide Arm Base Actuator	1
23.	KR4-16035	Spring, Slide Base Actuator	1
24.	KR3-14033	Assembly, Capstan Shaft and Flywheel	1
25.	KR4-28069-3	Assembly, Flywheel Bearing	1
26.	KR3-11189-2	Assembly, Flywheel Support	1

KEY NO.	PARTS NO.	DESCRIPTION	Q'ty
		MECHANISM CHASSIS	
27.	KR-33020	Washer, Nylon Flywheel	1
28.	KR-24041	Nut, Hex., Flywheel Bearing	1
29.	KR-11165	Washer, Flywheel Bearing	1
30.	KR4-36061	Stopper, Interlock Lever	1
31.	KR4-32041	Tube, Cartridge Spring	1
32.	KR4-31187	Battery Holder	1
33.	KR3-11183-2	Assembly, Motor Pulley Cover	1
34.	KR4-31203-5	Assembly, Reel Plate	2
35.	KR4-31206	Cap, Spindle	2
36.	KR4-31207	Washer, Spindle	2
37.	KR4-11172	Brake	1
38.	KR4-16038	Spring, Brake	1
39.	KR4-25075	Spacer, Brake	1
40.	KR4-11180	Slide Arm, Power Switch	1
41.	KR4-16039	Spring, Slide Arm	1
42.	KR4-31200-12	Assembly, Take-up Pulley and Arm	1
43.	KR4-16040	Spring, Take-up Pulley	1
44.	KR4-31212-12	Assembly, Push Button Switch	1
45.	KR-M1005-4	Assembly, Motor	1
46.	KR4-36057	Holding Rubber, Motor	2
47.	KR4-31201-7	Assembly, Idler and Arm	1
48.	KR4-16046	Spring, Idler and Arm	1
49.	KR4-11175-2	Assembly, Idler Base	1
50.	KR4-25090	Roller, Idler Base	2
51.	KR4-11173-2	Assembly, Rewind Roller Arm	1
52.	KR4-31202	Rewind Roller	1
53.	KR4-16047	Spring, Rewind Roller	1
54.	KR4-11186	Washer, Rewind Roller	1

MAIN PARTS LOCATION

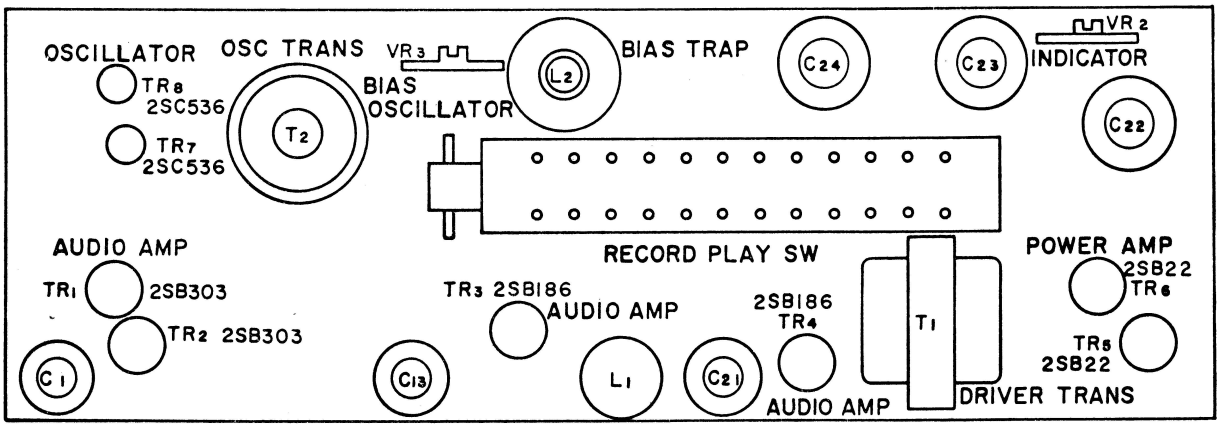

fig. 8

SCHEMATIC DIAGRAM

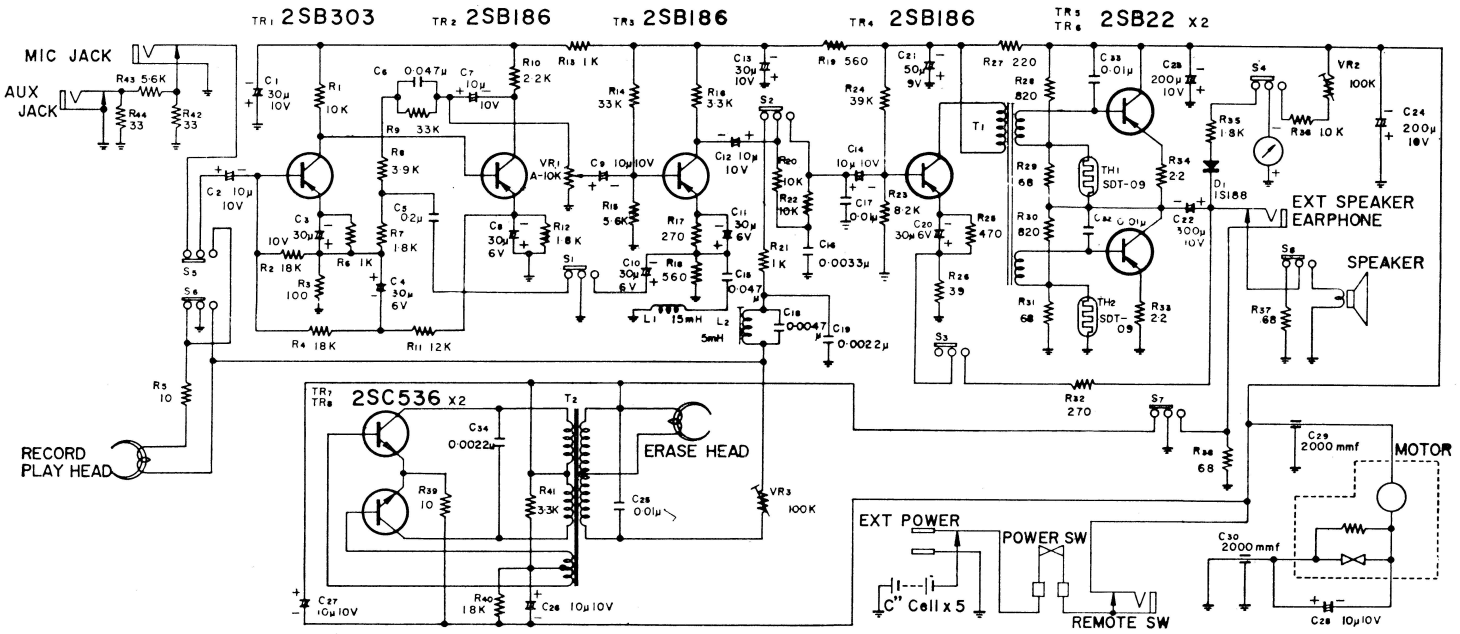

fig. 9

KEY NO.	PARTS NO.	DESCRIPTION	Q'ty
MECHANISM CHASSIS			
55.	KR4-15042	Spacer, Rewind Roller Arm	1
56.	KR4-31219	Push Button, Record	1
57.	KR4-31191	Arm, Record Switch	1
58.	KR4-24045	Spring, Record Button	1
59.	KR4-11181	Interlock Lever	1
60.	KR4-16045	Spring, Interlock	1
61.	KR-11200	Pin, Record Switch Arm	1
62.	KR-E1026	Switch, Power	1
63.	KR4-11193	Washer, (2.2×7)	2
64.	KR-11161	Screw, (2.6×5 Pan Hd)	13
65.	KR-11201	Screw, (2×12 Flt. Hd)	1
66.	KR-11202	Screw, (2× 4 Flt. Hd)	7
67.	KR-11203	Screw, (2×5 Round Hd)	2

KEY NO.	PARTS NO.	DESCRIPTION	Q'ty
MECHANISM CHASSIS			
68.	KR-24039	Screw, (2.6×4 Truss Hd, Phil)	1
69.	KR-11164	Screw, Self Tapping (2.6×5)	9
70.	KR-11169	C Clamp, (1.5 mm)	3
71.	KR-11168	C Clamp, (2 mm)	3
72.	KR-33019	Washer, Phenolic, Rewind Roller	1
73.	KR-11204	Washer, Record Button Spring	1
74.	KR4-24046	Plate, Battery Holder	1
75.	KR-11206	Washer, Record Head	1
76.	KR-11207	Screw, (2×4 Round Hd)	2
77.	KR-E4006	Power Jack (with Nut and Washer)	1
78.	KR-11208	Oval Terminal	1
79.	KR4-31213	Knob, Volume Control	1
80.	KR-11217	Spring Washer (2.6 mm)	2

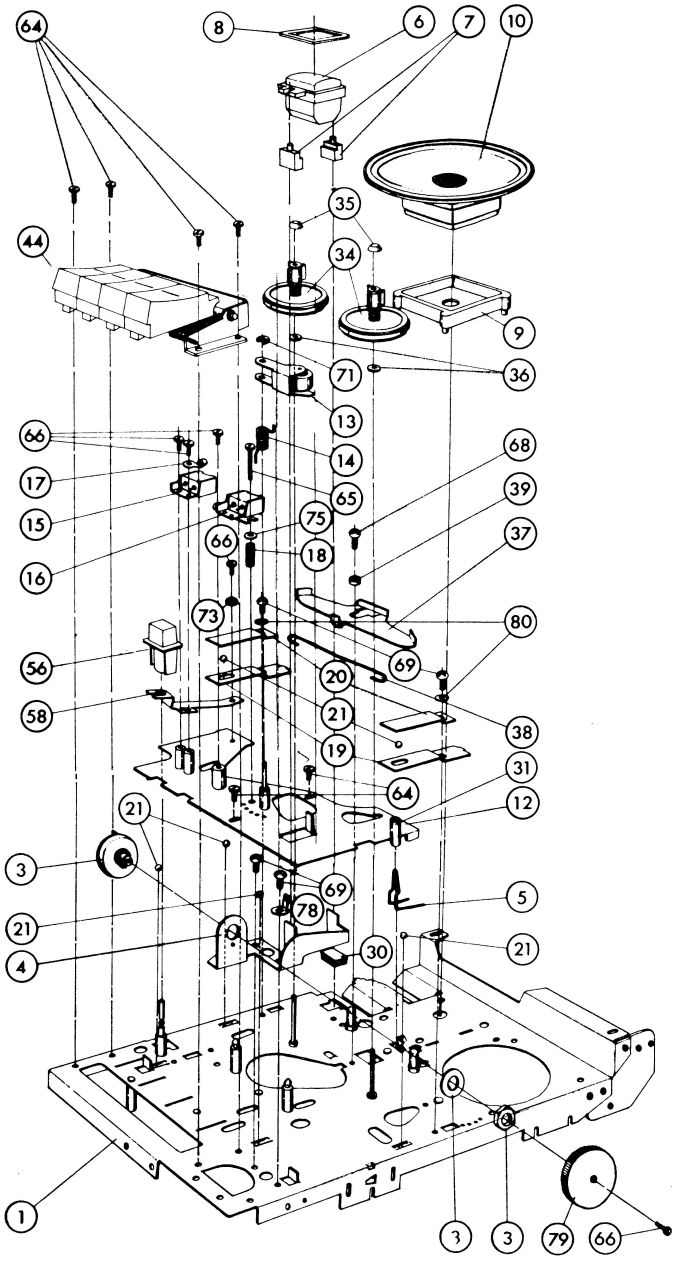

TOP VIEW fig. 6

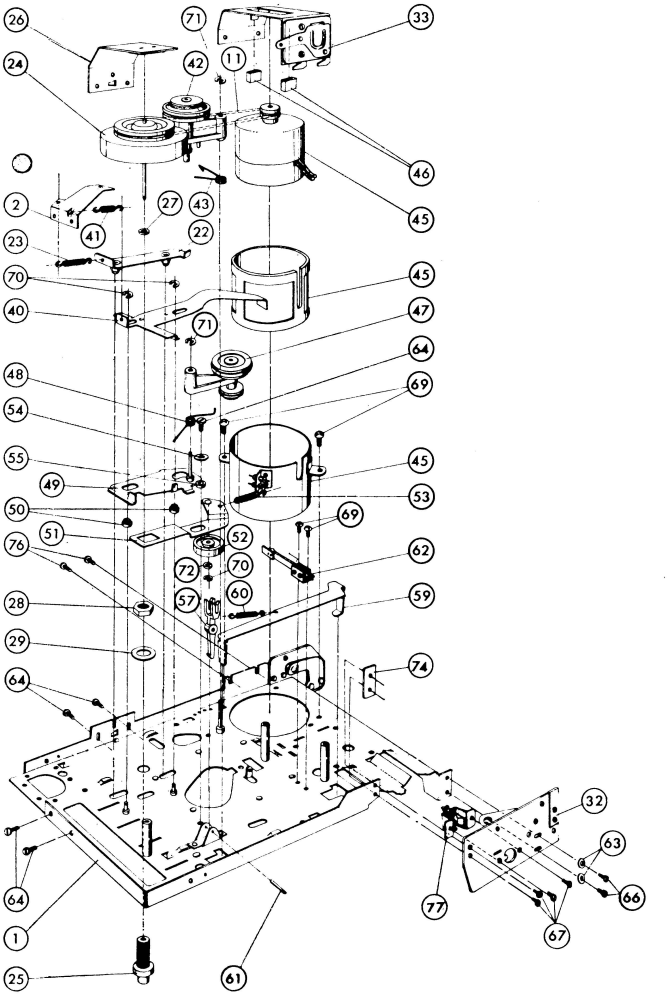

BOTTOM VIEW fig. 7

PARTS NO.	DESCRIPTION	Q'ty
Cabinet		
KR1-31282-8	Assembly, Cabinet Front	1
KR-31283-3	Assembly, Cabinet Back	1
KR2-31260	Lid, Cartridge Compartment	1
KR-31284-4	Assembly, Lid, Battery Compartment	1
KR4-25083	Screw, Hand Strap	2
KR4-31213	Assembly, Volume Control Knob	1
KR4-11163	Screw, (3 mm × 6 mm Pan Hd)	2
KR4-25082	Screw, Cabinet Back	2
KR-E3012	Assembly, Jack	1
KR-Y1021	Microphone, Dinamic with Remote Switch	1
KR-39034	Shoulder strap	1
KR-39037	Case, Microphone	1
KR-V2003	Earphone	1
KR-Y3001	Recording Cable (RK-5)	1
KR-39038	Leather case	1
KR-31185	Stand, Microphone	1

SYMBOL NO.	PARTS NO.	DESCRIPTION	Q'ty
Capacitors			
C-2, 13	KR-C9001	Electrolytic, 30 mfd. 10 WV	2
C-2, 7, 9, 12, 14, 26, 27, 28	KR-C9002	Electrolytic, 10 mfd. 10 WV	8
C-3, 4, 8, 10, 11, 20	KR-C9003	Electrolytic, 30 mfd. 6 WV	6
C-6, 15	KR-CM047M	Mylar, 0.047 mfd.	2
C-16	KR-CM0033M	Mylar, 0.0033 mfd.	1
C-19, 34	KR-CM0022M	Mylar, 0.0022 mfd.	2
C-21	KR-C9004	Electrolytic, 50 mfd. 9 WV	1
C-22	KR-C9005	Electrolytic, 300 mfd. 10 WV	1
C-23, 24	KR-C9006	Electrolytic, 200 mfd. 10 WV	2
C-18	KR-CM0047M	Mylar, 0.0047 mfd.	1
C-29, 30	KR-CC2000P	Ceramic 2000 mmfd. W/Metal	2
C-17, 32, 33, 25	KR-CM01	Mylar, 0.01 mfd.	4
C-5		Alsicon 0.2 mfd. 50 WV	1
Resistors			
R-1, 20, 22, 36	KR-R10KK	10 Kohm	4
R-2, 4, 40	KR-R18KK	18 Kohm	3
R-3	KR-R100K	100 ohm	1
R-5, 39	KR-R10K	10 ohm	2
R-6, 13, 21, 41	KR-R1KK	1 Kohm	4
R-16, 41	KR-R3.3KK	3.3 Kohm	2
R-8	KR-R3.9KK	3.9 Kohm	1
R-9, 14	KR-R33KK	33 Kohm	2
R-10	KR-R2.2KK	2.2 Kohm	1
R-11	KR-R12KK	12 Kohm	1
R-15	KR-R5.6KK	5.6 Kohm	1
R-19, 18	KR-R560K	560 ohm	2
R-23	KR-R8.2KK	8.2 Kohm	1
R-24	KR-R39KK	39 Kohm	1
R-25	KR-R470K	470 ohm	1
R-26	KR-R39K	39 ohm	1
R-27	KR-R220K	220 ohm	1
R-28, 30	KR-R820K	820 ohm	2
R-29, 31, 37, 38	KR-R68K	68 ohm	4

SYMBOL NO.	PARTS NO.	DESCRIPTION	Q'ty
Resistors			
R-32, 17	KR-R270K	270 ohm	2
R-33, 34,	KR-R2.2K	2.2 ohm	2
R-42	KR-R100K	100 ohm	1
R-43	KR-R22KK	22 ohm	1
R-112, 7, 35	KR-R1.8KK	1.8 Kohm	3
Variable Resistors			
VR-1	KR-G1019	A-10 Kohm	1
VR-2	KR-G1018	B-100 Kohm	2
Slide Switch			
SW-1	KR-E1028	Slide Switch	1
Transformers and Coils			
L-1	KR-N1008	Peaking coil, 15 mH ±5%	1
L-2	KR-N1013	Trap, Nias frequency, 5 mH Variable	1
T-1	KR-N1006	Input transformer	1
T-2	KR-N1011	Oscillator Coil	1
Transistors and Thermistors			
TR-1	KR-Q1010	2SB303, 1st Audio amplifier	1
TR-2, 3, 4	KR-Q1011	2SB186, 2nd, 3rd, 4th Audio Amplifier	3
TR-5, 6,	KR-Q1012	2SB22, Audio power amplifier	2
TR-7, 8	KR-Q1013	2SC536, Bias Oscillator	2
TH-1, 2	KR-Q4005	SDT-09	2
ND-1	KR-Q0005	1S188	1
Miscellaneous			
PCB	KR-33023	Printed circuit board without components	1
PCB-A	KRA-33023	Printed circuit board with components	1
PCBS	KR-33024	Sub-printed circuit board without components	1
PCBS-A	KRA-33024	Sub-printed circuit board with components	1