PHILIPS

LBH 1002

100 WATT

SOLID STATE AMPLIFIER

PHILIPS

PHILIPS

MANUAL

LBH 1002

100 WATT

SOLID STATE AMPLIFIER

CONTENTS

LBH 1002

GENERAL INFORMATION

Dimensions	: Width	15 7/8 ins. 40.5 cm
	depth	12½ ins. 32.0 cm
	height	4½ ins. 10.7 cm
Weight	: 29 lbs. 13Kg	
Inputs	: 2 x microphone	
	1 x pickup	
Outputs	: 50V, 70V & 100V	
Transistors . pre-amplifier	: 5 x BC109	
low pass filter	: 3 x BC107	
main amplifier	: 1 x BC107	
	1 x BC108	
	5 x BC109	
	3 x BC179	
	2 x BF178	
	1 x 40409	
	6 x SDT9203	
	1 x BT101 - 300R	
Diodes low passfilter	: 1 x BZY 88/C18	
main amplifier	: 15 x IN914	
	1 x 1N4148	
	4 x BYX38/600	
	1 x BZY88/C6V2	
	1 x BZY88/C12	
	1 x BZY88/C18	
Fuses	: FS1 DC Supply	3A
	FS2 Mains	3A

TECHNICAL DATA

Rated output power	: at 1KH	: 100W
I.H.F. music power	:	: 120W
Mains voltage supply	: 110V, 127V, 220V, 245, 50/60 Hz	
Mains power consumption	: at 100W output (sine)	: 175 VA
	at full output (music. speech)	:100VA
	at no signal	: 40VA
T.H. Distortion	: at 1 KHz, 100W	: 1.0%
	,, ,, ,, 90 W	: 0.3%
	,, ,, ,, 1 W	: 0.1%
Intermodulation distortion	: at 10W	: 3.0%
Line output voltages	: balanced 50V, 70V, 100V.	

Damping factor	:	100V Output	
		at 30Hz	: 2.9
		at 1KHz	: 6.5
		at 15KHz	: 2.8
Input Impedance	:	pickup	: 1 M.ohm
		microphone	: 500 – 200E, 50E
Sensitivity	:	pick-up	: 130 mV
		microphone 500E	: 0.8 mV
		" " 200E	: 0.4 mV
		" " 50E*	: 0.2 mV
		main amplifier only	: 1V
		*50E requires parallel connection of the 2 primary coils.	
Frequency response	:	at 6db below full output	: _ 3db. 40 Hz – 15 KHz
			: _30db.30 Hz – 22 KHz
Signal/noise	:	at maximum gain and 500E termination	: better than 45db.
Pre-amplifier monitoring output	:	at pin 1 "pick-up"	
		source impedance	: 22 K ohm
		output voltage	: 1V
Low voltage supply	:	at pin 5 of "pick-up" and "auxiliary"	: + 18 V, 10 mA
Loud speaker monitoring	:	at pin 2 "auxiliary"	
		source impedance	: 10 ohm
		voltage (at full output)	: 1V
Tone control range	:	bass cut	: 15db at 50 Hz
		treble cut	: 15db at 10 KHz
Protection	:	The amplifier is protected against increased loading and excessively high input signals by a switching gate, which earths the input to the main amplifier if activated. The amplifier returns to normal operation when the fault is removed.	
Sockets	:	rear of apparatus	
		right hand side from top to bottom	
		microphone 1	5 pin
		" " 2	5 pin
		pickup	5 pin
		auxiliary	6 pin

Sockets (continued) : Left hand side
output 2 x banana socket/terminal

Connections : Microphone plugs
1. input
2. earth
3. input

Pickup plug
3. input (sensitive side)
2. earth
1. pre-amp output monitoring
5. + 18V supply

Auxiliary plug
1. earth
2. loudspeaker monitoring
3. switch (to operate plug-in unit)
4. " (" " " ")
5. + 18V supply
6. switch (to operate music mute)

Accessories : Muting of P.U. channel
Time signal oscillator
Manual/automatic siren
Continental siren
Bell sound simulator
Relays
All the accessories are optional

Muting of P.U. Channel : The pickup is suppressed 30db by shorting pin 6 to pin 1 on "auxiliary" socket. This is most conveniently achieved using a contact on the press-to talk switch.

Time signal oscillator : Plug-in unit. Operation initiated by contact closure between Pin 3 and 4 on "auxiliary" socket. The duration of the tone may be selected by means of the shorting loop connected to the numbered pins at the top of the printed circuit board:

Tone duration	bridge pins
50 mS	1 – 3
1 Sec	1 – 2
2 Sec	2 – 3
3 Sec	3 – 4
continuous	4 – 5

The output level may be adjusted by means of the pre-set potentiometer on the same board. Clockwise rotation increases the output.

SC16 and SC36, SC21/SC41 effectively converts SC21/SC41 from a power npn to a high gain power pnp transistor, complementing the npn combination of SC9, SC35 and SC20/SC40.

Diodes SC10 – 15 and SC32 with resistors R22 and R23 limit the peak current in the output stage to a safe value (but above the normal peak operating value).

R26 and C12 prevent the amplifier load impedance from rising at high frequency if a reactive load is applied.

DESCRIPTION OF PROTECTION CIRCUIT

Basically the protection circuit senses both output voltage and current. During overload conditions, when the load impedence is too low, excessive current will flow for a given output voltage. The protection circuit senses this excess and shunts the input signal to the amplifier. After 3 seconds the protection circuit removes the short circuit at the input and briefly samples the output voltage-current conditions. If the fault persists, the short circuit will be reapplied and the cycle will be repeated until normal load conditions are restored.

R29 is the current sensing resistor for the protection circuit. The voltage developed across this resistor is proportional to the output load current and is applied via R48//C22 and R9 to diode SC3. The resulting rectified voltage tends to charge up C7.

The output voltage sensing is supplied by the voltage divider R2 and R3. The signal is rectified by diode SC2 and C21 charges up causing transistor SC38 to conduct.

Under normal operating conditions C7 will be sufficiently discharged by transistor SC38 and transistor SC7 will remain cut off.

OPERATION DURING OVERLOAD

When an overload occurs transistor SC38 will be unable to hold the voltage across C7 low enough because of the increased current/voltage ratio, and transistor SC7 will turn on.

The resulting lower collector voltage of SC7 turns on the switching stage SC17 and SC18 which will remain turned on independant of SC7.

Thus the switching stage transistor SC18 supplies current via R21 and R18 to the switching diodes SC19 and SC22 which had previously been reverse biassed by the voltage across R25 (3 volts). These conducting diodes form a low impedance path to earth for the input signal which is attenuated by the series input resistor R1. The zener diode SC34 conducts when switching current flows through the diodes.

The switching stage transistor SC18 also supplies voltage to R27 which enables C15 to charge slowly. After about 3 seconds, the voltage across C15 rises to approximately .6 volt and transistor SC24 slowly turns on.

Until now transistor SC26 was biassed on and SC25 was cut off due to its reverse biassed base emitter.

When SC24 first conducts, it provides just enough bias for SC25 to turn on, but not to saturate. Under this bias condition SC25/SC26 will act as an astable multivibrator.

Usually only one positive pulse (of about 1 mS) is developed across R35 and applied to the base of SC23 via C17 and R33, and also to the emitter of SC17 via C11.

Transistor SC23 is momentarily saturated and C15 discharges via R30 to approximately .2 volt which is too low for transistor SC24 to continue conducting. Insufficient voltage at the base of SC25 stops it turning on and generating another positive pulse and SC26 remains conducting.

During the time that the input signal has been attenuated by the switching diodes and R1, transistor SC7 will be cut off. When the positive pulse is applied to the emitter of SC17 via C11, SC17 cuts off and SC18 also cuts off because it depends on the voltage across R16 for forward bias.

The switching diodes are now reverse biassed by the voltage divider R24, R25 and full input signal is again supplied to the amplifier. If the overload condition is still present, the cycle will repeat and the amplifier will be cut off immediately for another 3 seconds.

Protection of the input transistors against excessive overload is provided. Negative peaks are clipped by SC19 and SC33//C10. Positive peaks are clipped by SC22 and SC34//C13.

CHECKING AND ADJUSTING MAIN AMPLIFIER

Adjusting RV1 and RV2

NOTE: Potentiometers RV1 and RV2 must only be adjusted according to following procedure otherwise damage to equipment may result.

1. No signal input and correct output load (check O/P Transformer tappings).

2. Ensure that RV2 (bottom preset potentiometer) is fully clockwise and RV1 (top preset potentiometer) is approximately mid position.

3. Connect a meter, between earth and the positive terminal of C16 (large capacitor, nearest power transformer and voltage carousel) and switch to 100V DC range.

4. Switch amplifier on. Voltage should be approximately 90 volts.

5. Move positive meter probe to positive terminal of C14 (large capacitor nearest output transformer) and adjust RV1 until voltage reads half D.C. supply measured step 4.

6. Switch amplifier off, remove fuse FS1 (upper) and connect positive probe of meter to end terminal of fuse holder FS1 and the negative probe to the side terminal. Switch meter to 200 mA D.C. range.

7. Switch amplifier on and adjust RV2 until meter reads 200mA for model LBH1002/01 and 120mA for LBH1002/02. (Check model number on rear of cabinet.)

CHECKING OPERATION OF PROTECTION CIRCUIT

To check operation of protection circuit apply 1 KHz full output in 100 ohm 100W load, bridge the output with another 100 ohm 50W resistor for about ½ second. Output should disappear, and then reappear after about three seconds.

It is possible to observe the protection circuit operation by connecting a C.R.O. across C15. (Y amplifier DC coupled .2 Volt/division, Time base ½ second/division)

Referring to fig. 1 below:

A) Overload occurs. SC7, SC17, SC18 conduct.
C15 begins to charge.

B) SC24 conducts, Astable multivibrator SC25/26 generates a positive pulse and SC23 discharges C15 sufficiently.

C) No further overload. SC7, SC17, SC18, SC24 turned off. C15 slowly discharges.

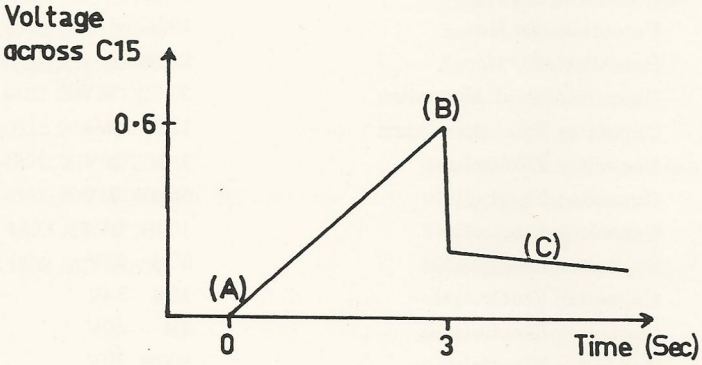

Variations in time can be expected due to tolerances of C15 & R22.

fig.1

For test purposes only, the protection circuit may be rendered inoperative by short circuiting C7 (earth the end away from pre-set position RV1). Remove short after tests.

CHECKING LOW PASS FILTER

1. Disconnect input and output of filter.

2. Connect signal generator (1 Volt p.p) across input terminals of board.

3. Connect C.R.O. or VTVM to output terminals

4. Output should be 1V ± 0.2V from 300 Hz to 17KHz.

5. " " " 0.3V at 30 KHz (down 10db)

6. " " " 0.1V at 50 KHz (down 20db)

7. " " " undistorted on all tests.

Note: Low pass filter must be disconnected from input of main amplifier when checking gain of main amplifier.

SERVICE PARTS LIST LBH1002/01

Electrical

4802 214 17501	Assembly of Pre-amplifier		
4802 214 17506	Assembly of 100W. main amplifier		
4802 214 17512	Assembly of Low Pass Filter		
4802 113 87501	Resistor Wire Wound		E25 5W
4802 113 87502	Resistor Wire Wound		18E 5W
4802 113 87503	Resistor Wire Wound		2K7 5W
4802 116 47501	Resistor P.T.C. R57, R58.		
4802 101 37501	Potentiometer log		2M
4802 102 17501	Potentiometer lin.		2 x 100K
4802 101 37504	Potentiometer log.		500K. T40K
4822 101 10022	Potentiometer lin		100K
4822 101 10046	Potentiometer lin		220E
4802 124 17501	Capacitor Solid Aluminium		20 M 16V
4802 124 17502	Capacitor Solic Aluminium		12M5 6V4
4822 124 20342	Capacitor Electrolytic		1M6 25V
4822 124 20351	Capacitor Electrolytic		6M4 25V
4822 124 20214	Capacitor Electrolytic		100M 6V4
4822 124 20374	Capacitor Electrolytic		50M 25V
4822 124 20353	Capacitor Electrolytic		10M 64V
4822 124 20342	Capacitor Electrolytic		1M 40V
4822 124 20395	Capacitor Electrolytic		200M 10V
4822 124 20423	Capacitor Electrolytic		25M 25V
4822 124 20488	Capacitor Electrolytic		80M 25V
4802 124 77503	Capacitor Electrolytic		2800M100V
4802 142 57501	Transformer input		IT8500
4802 140 37501	Transformer output		OP551
4802 145 57501	Transformer power		PF3087
4802 253 47502	Fuse		3A
4802 134 27503	Neon indicator		110V
5322 130 30009	Diode	IN914	
		IN4148	
		BYX38/600	
5322 130 3046		BZY88/C12	
5322 130 30286		BZY88/C6V2	
4822 130 30304		BZY88/C18	
5322 130 40357	Transistor	BC107	
		BC108	
		BC109	
5322 130 40355		BC178	
5322 130 40353		BC179	
		40409	
		40410	
		40411	
		SDT9203	
		BT101-300R	

Mechanical

4802 447 57509	Cover
4802 454 47503	Nameplate front
4802 454 47504	Nameplate output
4802 454 47505	Nameplate microphone "1"
4802 454 47506	Nameplate microphone "2"
4802 454 47507	Nameplate auxiliary
4802 454 47508	Nameplate pickup
4802 413 47505	Knob
4802 413 77501	Knob insert
4802 272 17501	Plug voltage selector
4802 256 37503	Fuse holder barrel type
4822 267 40039	Socket 5 pin
4822 267 40046	Socket 6 pin
4822 264 40023	Plug 5 pin
4822 264 40026	Plug 6 pin
4802 267 47503	Socket 6 way (for accessory plug-in)
4802 290 47504	Terminal black
4802 290 47503	Terminal red
4802 325 57503	Grommet cord retainer

RESISTOR SYMBOLS

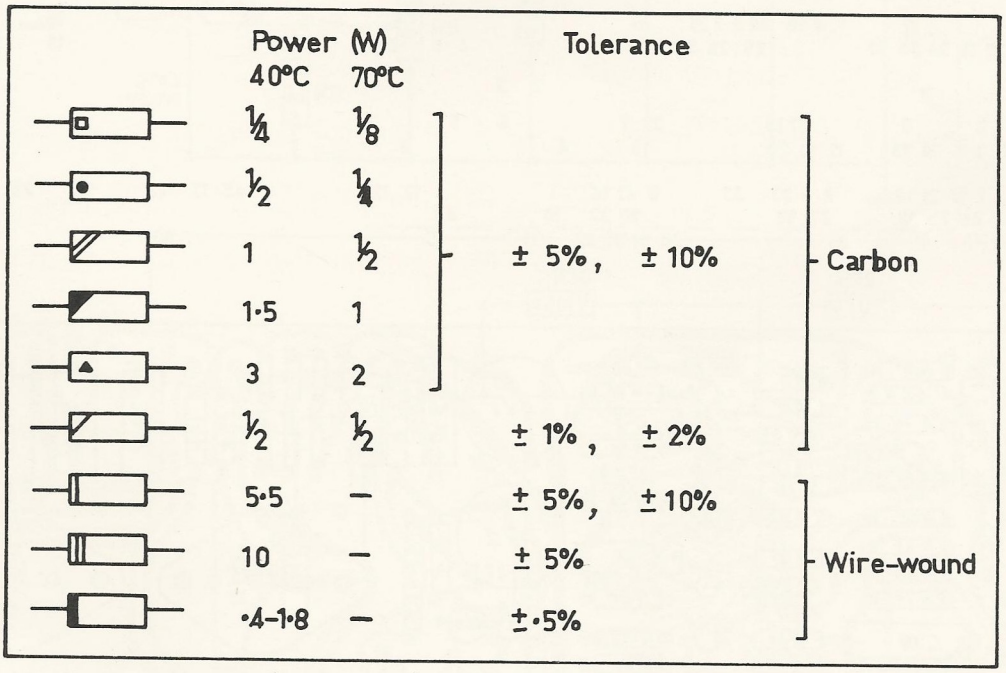

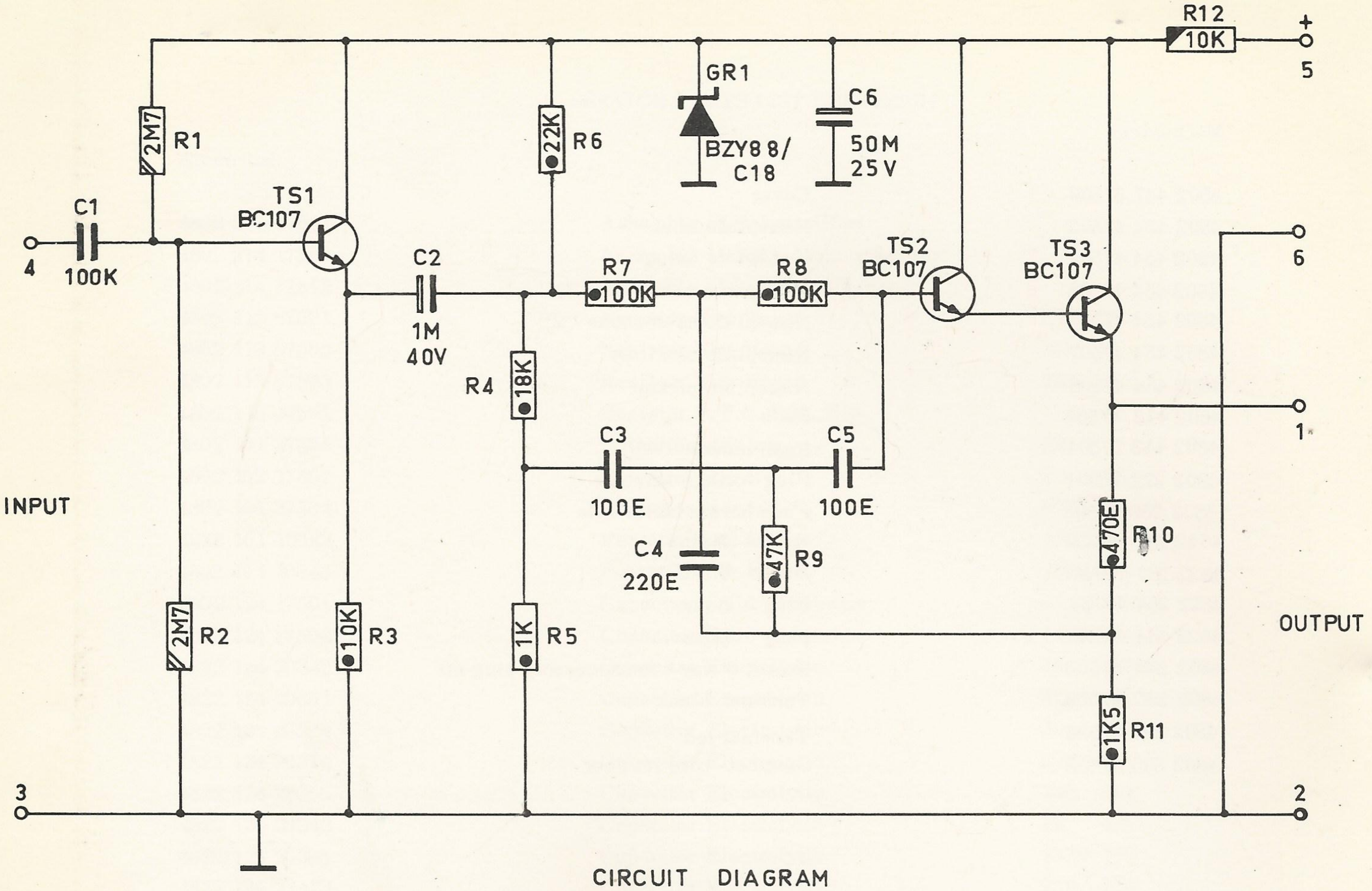

CIRCUIT DIAGRAM
OF LOW PASS FILTER
FOR 40W & 100W AMPLIFIERS

SC 37 17 3 18 38 2 7 23 39 5 10-15 35 36 27 28
1 22 19 34 33 31 25 26 24 4 8 6 32 9 16 29 30

RV 1 2 3

C 2 9 17 18 21 7 6 5 12
3 1 10 13 11 19 20 15 4 8

R 43 44 5 2 16 21 18 3 9 33 37 8 41 14 13 12 45 17 23 22 26 29 47
1 7 24 25 19 27 38 30 32 10 40
4 6 35 34 31 36 39 11 15 46 20 28

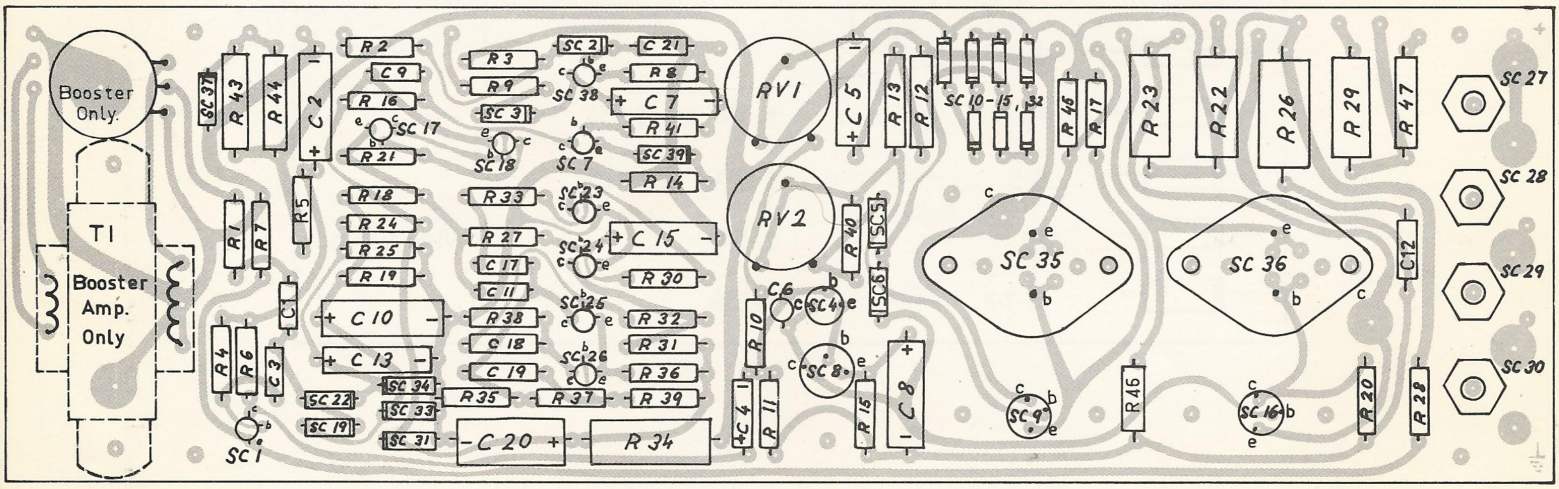

Printed circuit board
100 watt POWER AMPLIFIER.
4802 214 17506.

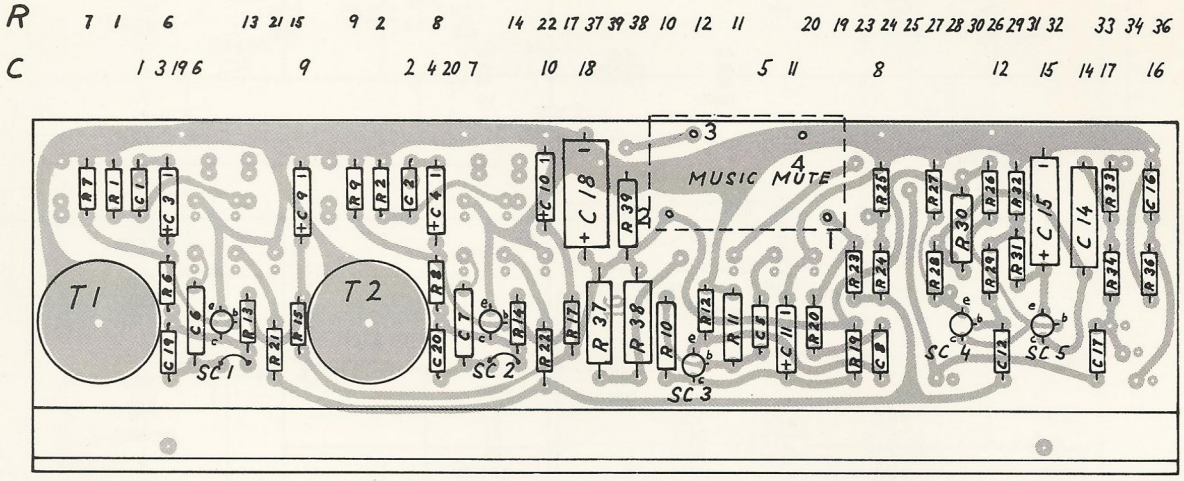

Printed circuit board
PRE AMPLIFIER.
4802 214 17501.

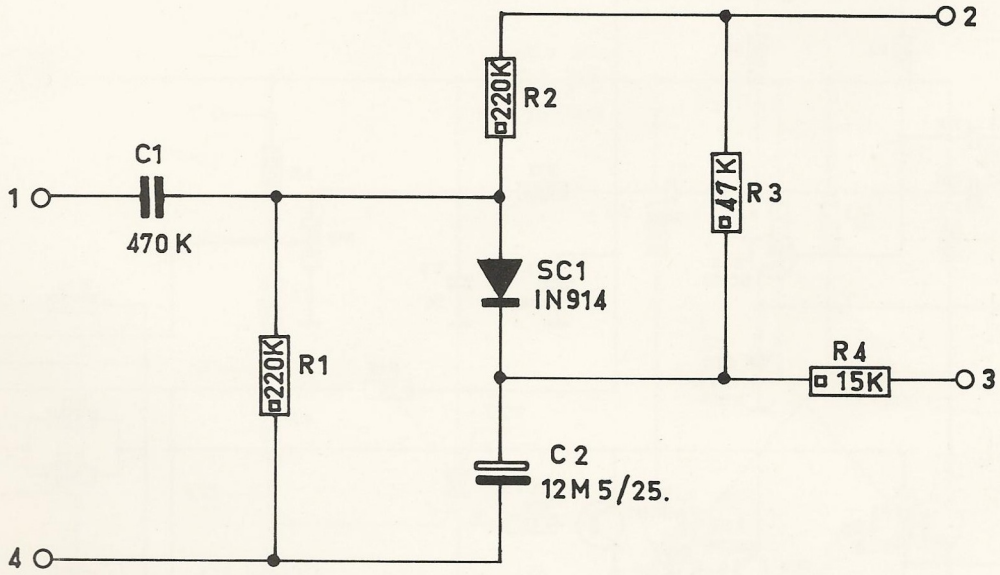

Circuit diagram of
MUSIC MUTING.
4802 214 17511.

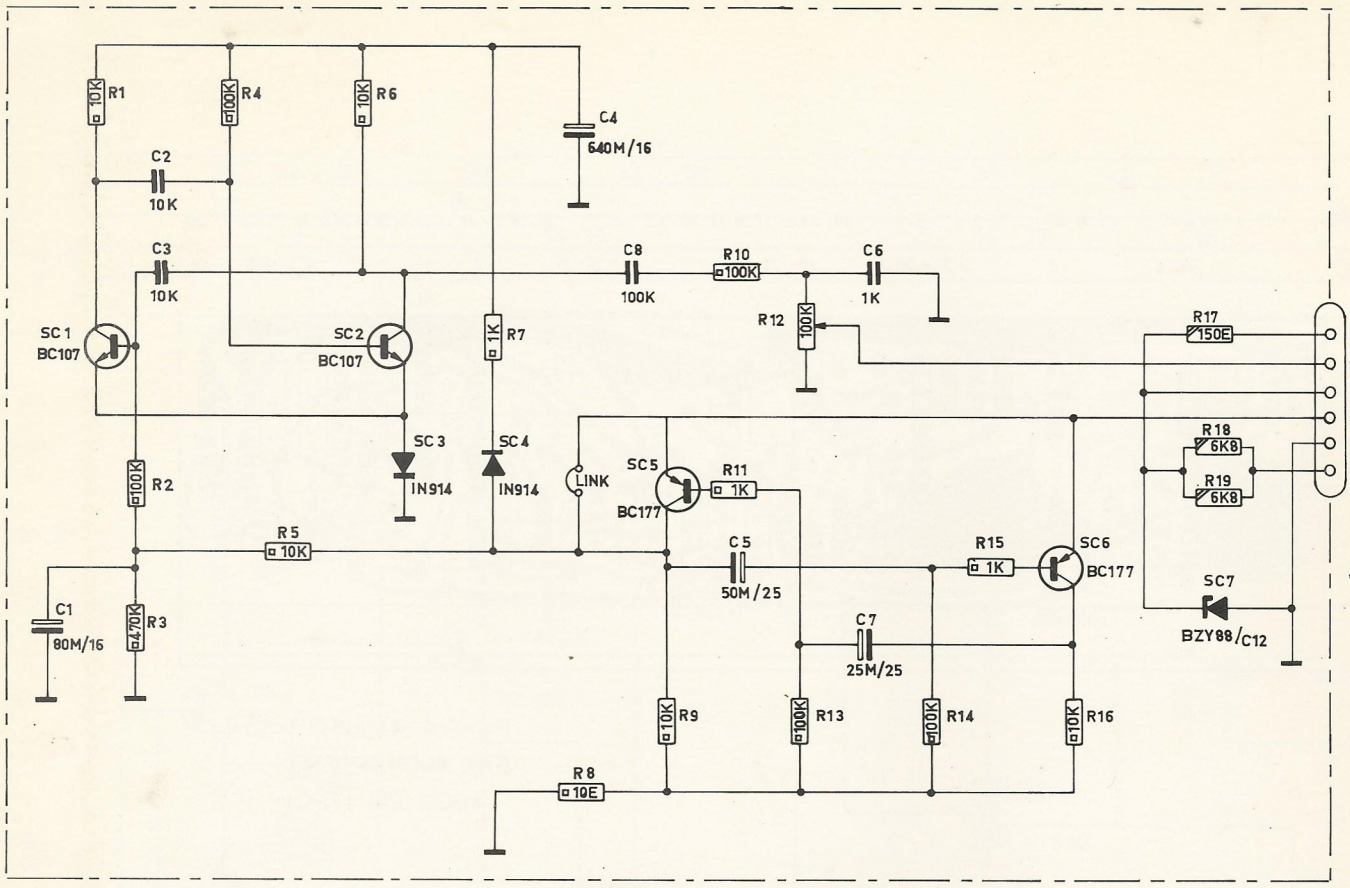

* Alternative supplies.

BC107. BC177.

NOTE. Connect link for manual operation.

Circuit diagram of
MANUAL / AUTOMATIC SIREN.
4802 214 17508.

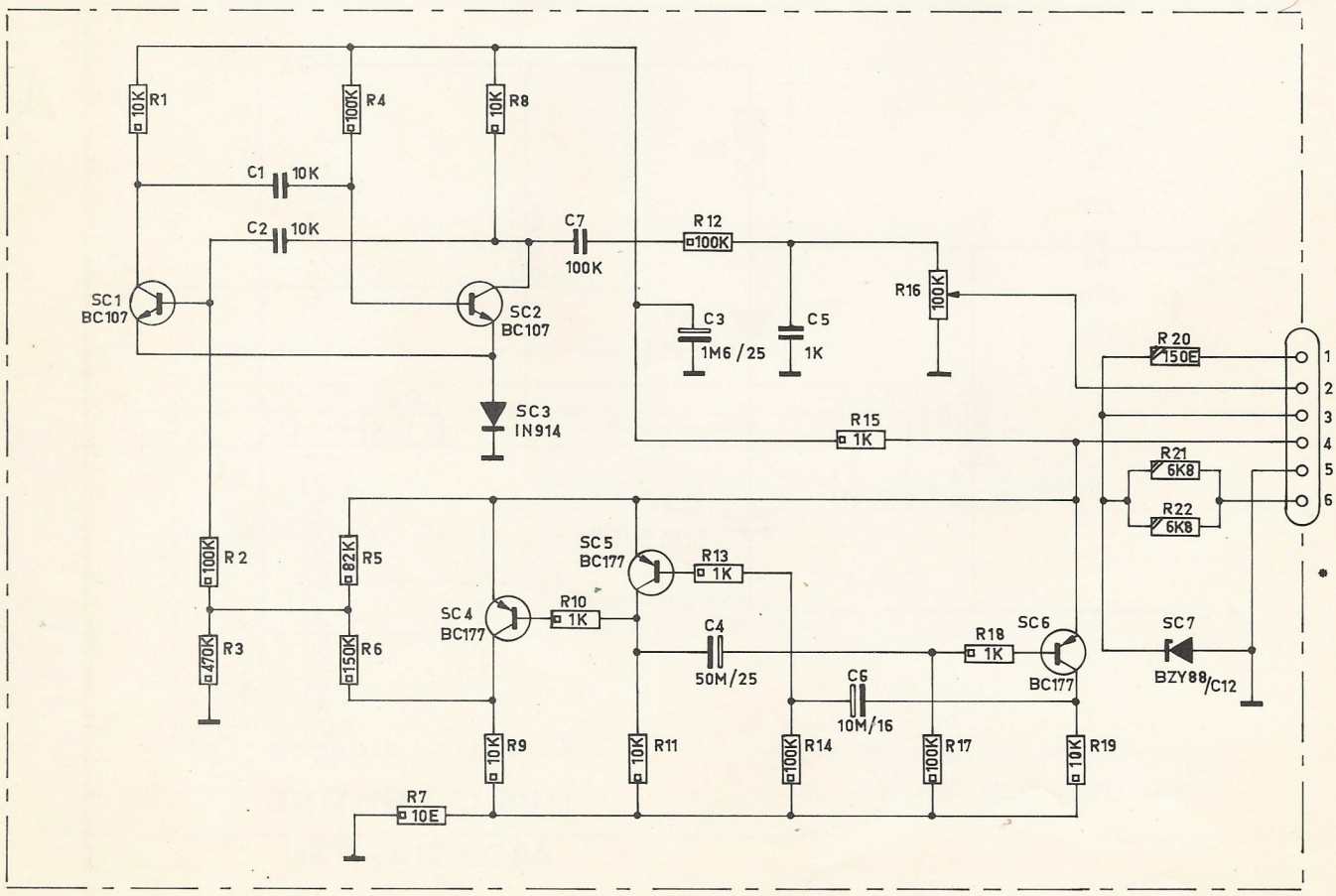

* Alternative supplies.

BC107. BC177.

Circuit diagram of
CONTINENTAL SIREN.
4802 214 17509.

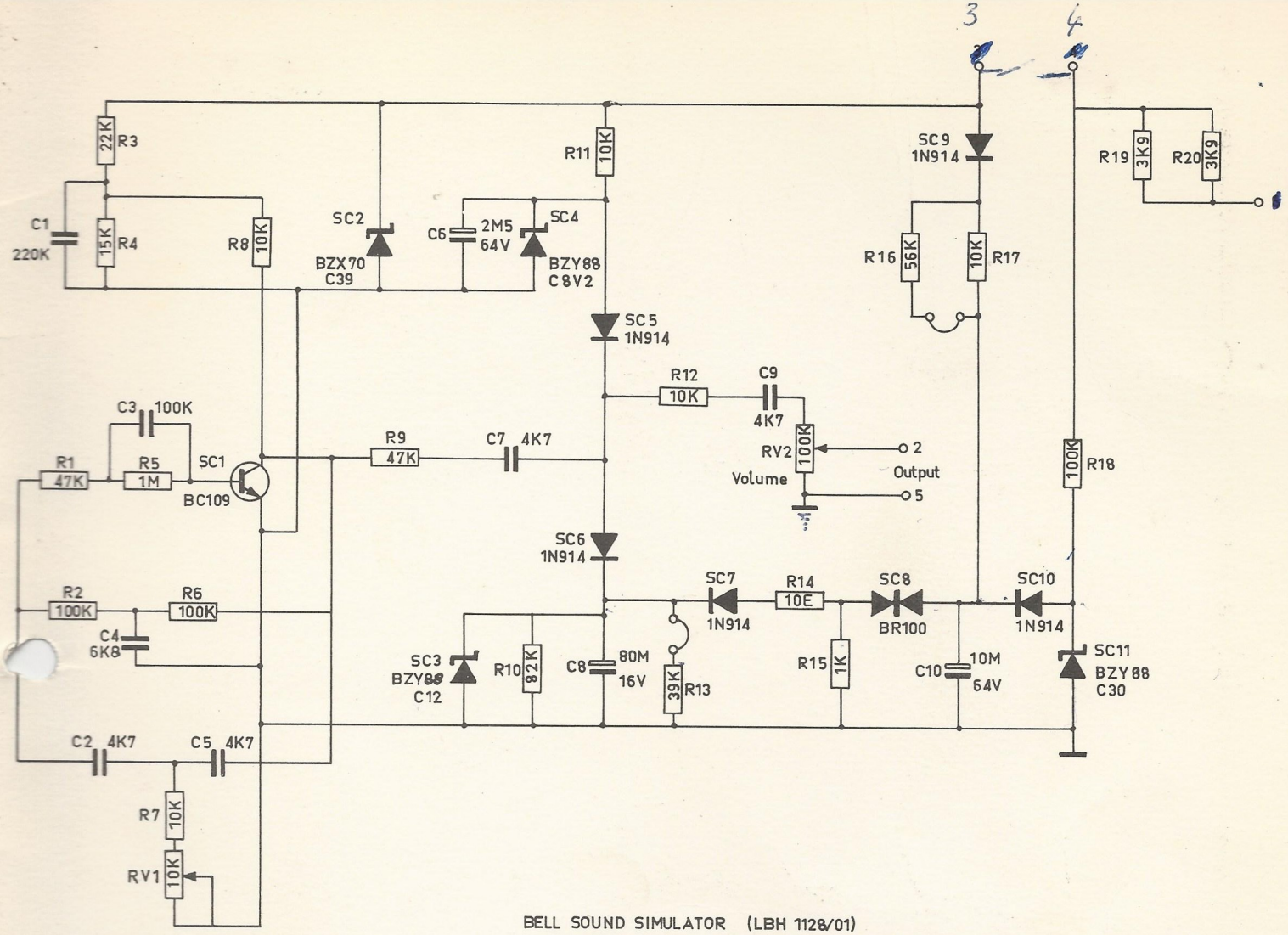

BELL SOUND SIMULATOR (LBH 1128/01)

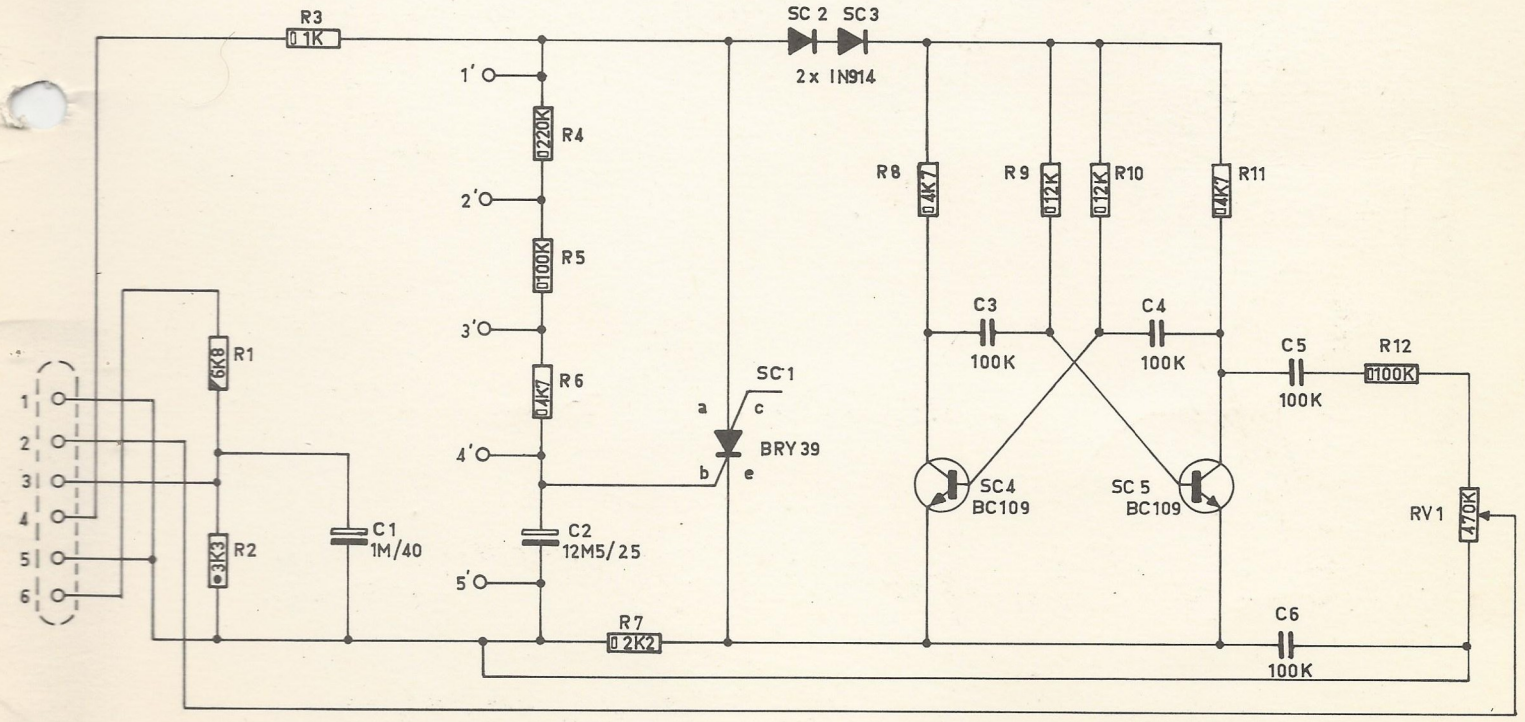

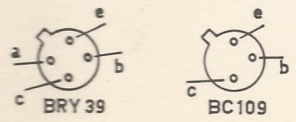

Short pins 1'-2' 1s. signal.
2'-3' 2s.
none or 3'-4' 3s.
4'-5' continuous
1'-3' 50ms.

Circuit diagram of
TIME SIGNAL OSCILLATOR.
4802 214 17507.

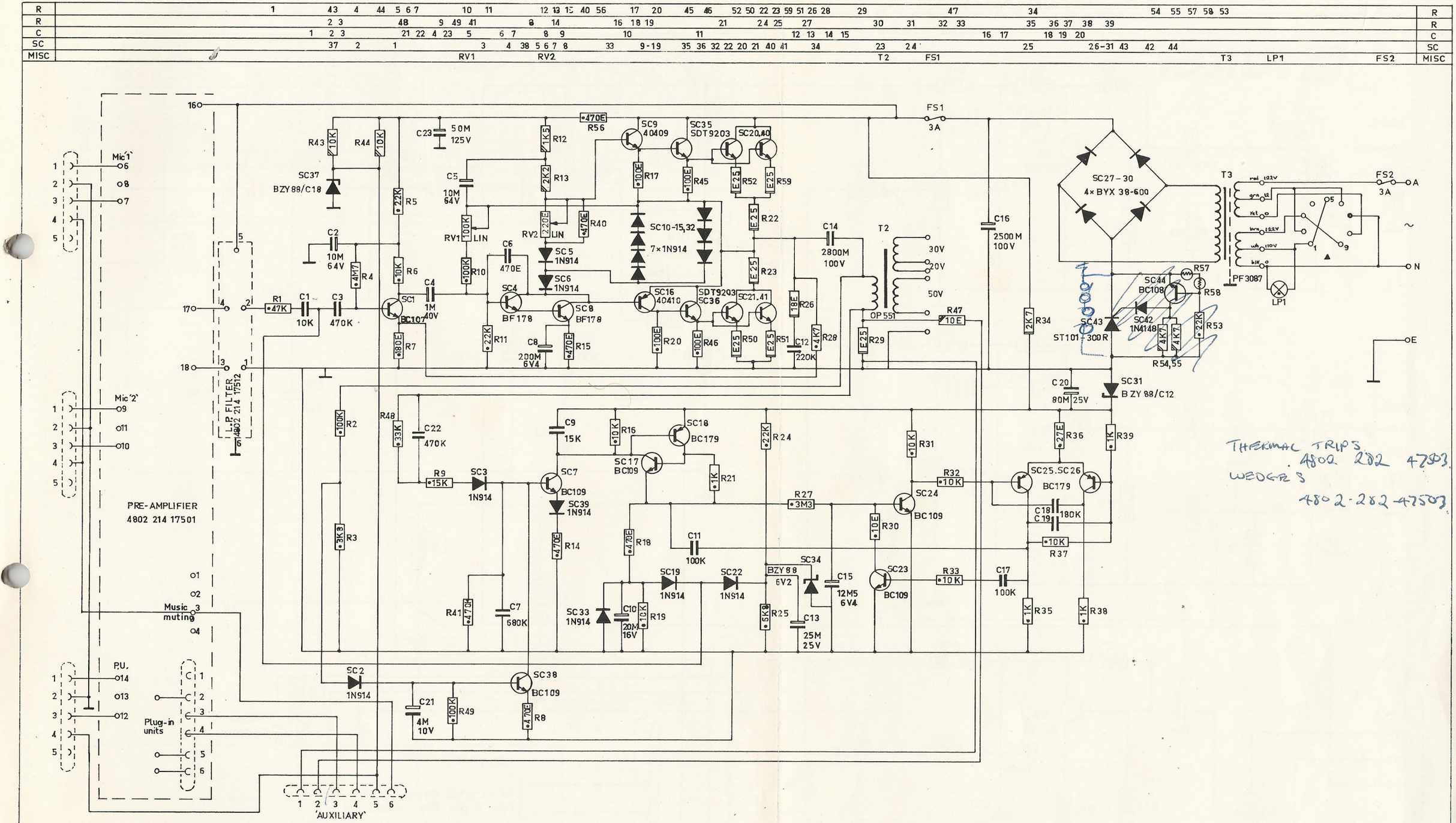

COMPLETE 100 WATT AMPLIFIER (LBH 1002)

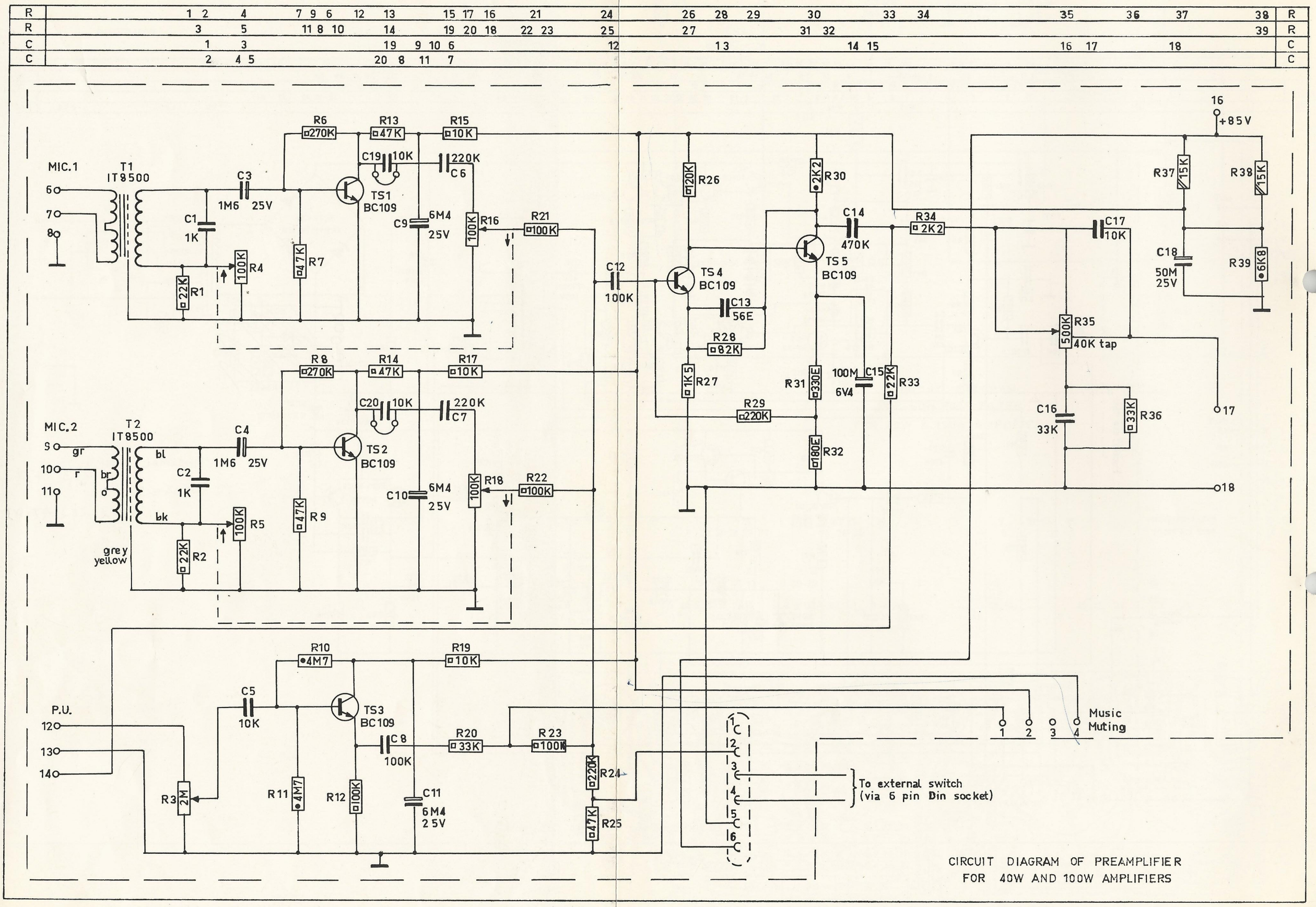

CIRCUIT DIAGRAM OF PREAMPLIFIER
FOR 40W AND 100W AMPLIFIERS

PHILIPS

SERVICE

Electron optics / Nuclear and electrochemical equipment / X-Ray analysis / Cryogenic equipment / Test and measuring equipment / Process instrumentation / Industrial Data Processing Systems / Weighing / Welding / Numerical Control / Textile equipment

PHILIPS

4.2.72 LBH 1002 AU 116

— Solution.

Transistor XC20 (SDT 9203) in parallel with SC40 and transistor SC27 in parallel with SC41 can be replaced by one only 97 SE 113 for each parallel combination.

97 SE 113 no code number

In case where two SDT 9203 are available to replace one faulty 97 SE 113, the repair can be completed with the extra components.

1	Mica washer	4802 255 47501
2	Nylon bushes	4802 255 47502