PHILIPS Service notes

L2X97T-00R

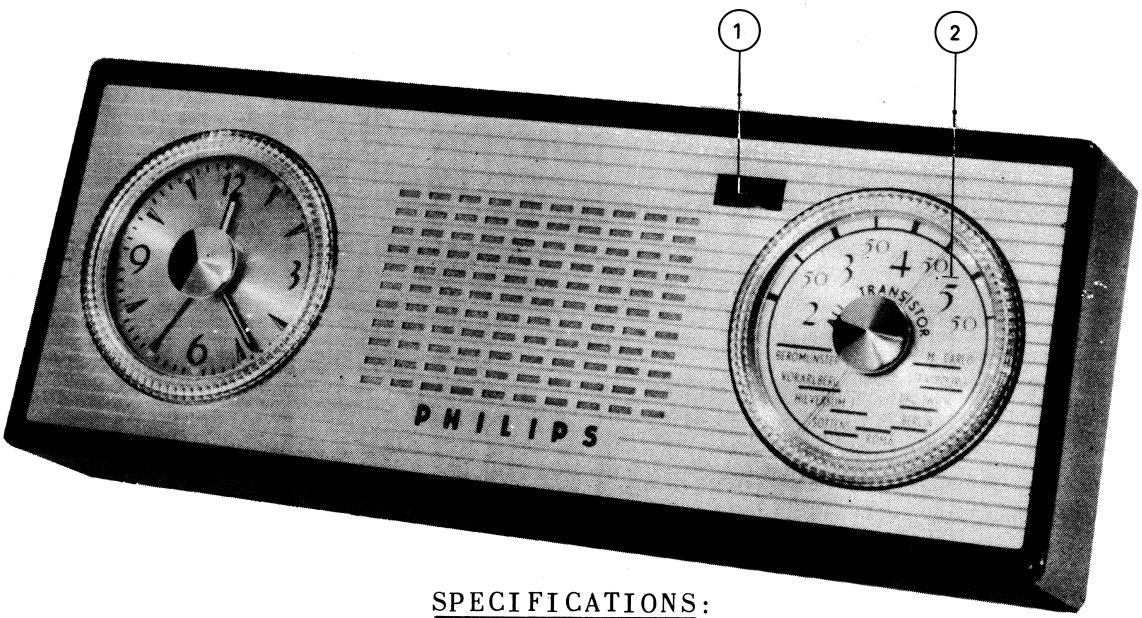

SPECIFICATIONS:

Tuning Range:	*517 - 1622 Kcs. (185 - 580 M)*
Intermediate Frequency:	*452 Kcs.*
Power Supply:	*Battery 6V. (4X tpye 915)*
Battery Consumption:	*Radio only : 8.5 mA without signal,* *Clock only : 0.4 mA* *Buzzer only: 35 mA.*
Dimensions:	*9 7/32" x 3 15/32" x 1 29/64".*
Output:	100 mW.

CONTROL FUNCTIONS:

1. Volume control with battery on-off switch.
2. Tuning control.

SEMI-CONDUCTORS AND FUNCTIONS:

Function	No.	Type	
Frequency Converter	TS1	OC44	Transistor
1st I.F. Amplifier	TS2	OC45	"
2nd I.F. Amplifier	TS3	OC45	"
1st Audio Amplifier	TS4	OC71	"
2nd Audio Amplifier	TS5	OC71	"
Push Pull Audio Amplifiers	TS6, TS7	2OC72	"
Demodulator and AVC.	X1	OA95	Germanium Diode.

Published by : THE COMMONWEALTH SERVICE DEPARTMENT,
PHILIPS ELECTRICAL INDUSTRIES PTY. LTD.,
SYDNEY .. AUSTRALIA.

March 1960.

INDUCTORS:

POSITION	FUNCTION	CODE NO	POS.	FUNCTION	CODE NO.
S1) S1A)	Rod Aerial Assembly	A3 803 62	S8) S9) C13)	3rd. I.F. Transformer	A3 128 67
S2) S3)	Oscillator Coil	A3 128 65	S10) S11)	Driver Transformer	A3 162 03
S4) S5)) C9)	1st. I.F. Transformer	A3 128 66	S12) S13) S14)	Output Transformer	A3 153 90
S6) S7) C10)	2nd. I.F. Transformer	A3 128 66	S16) S15)	Loudspeaker	AD 2200 Z

CAPACITORS AND RESISTORS:

POS.	CODE NO.	DESCRIPTION	POS.	CODE NO.	DESCRIPTION
C1) C2)	49 002 22	Var. Condenser	R12	B1 514 06	Switch Potentiometer 10 KΩ
C4	909/A25	25μF x 6V		904/=	Ceramic capacitor
				906/L=	Styrene capacitor 125V
C16	AC5711/8	8 μF x 6V		901/=	Precision carbon resistor ½ watt.
C17	"	8 μF x 6V		902/=	10% carbon resistor ½ watt.
C18	"	8 μF x 6V			
C19	AC5711/80	80μF x 6V			
C20	AC5711/8	8 μF x 6V			
C30	C.426.AE/C400	400μFx 6.4V			

On circuit, values are expressed in Ohms. or picafarads unless otherwise stated.

MISCELLANEOUS PARTS:

Cabinet, black	P5 250 03/350
Front	A3 308 95
Cover	A3 348 02
Screw, fixing cover	A3 715 13
Knob, tuning	A3 772 61
Screw, in knob	A3 714 47
Knob, vol. control	A3 783 36
Cover, for battery holder	P5 280 65/377
Clock	A3 781 99
Dial, for clock	A3 835 73
Window, for clock	A3 762 83
3-pos. switch	A3 187 57
Dial, scale	A3 925 69

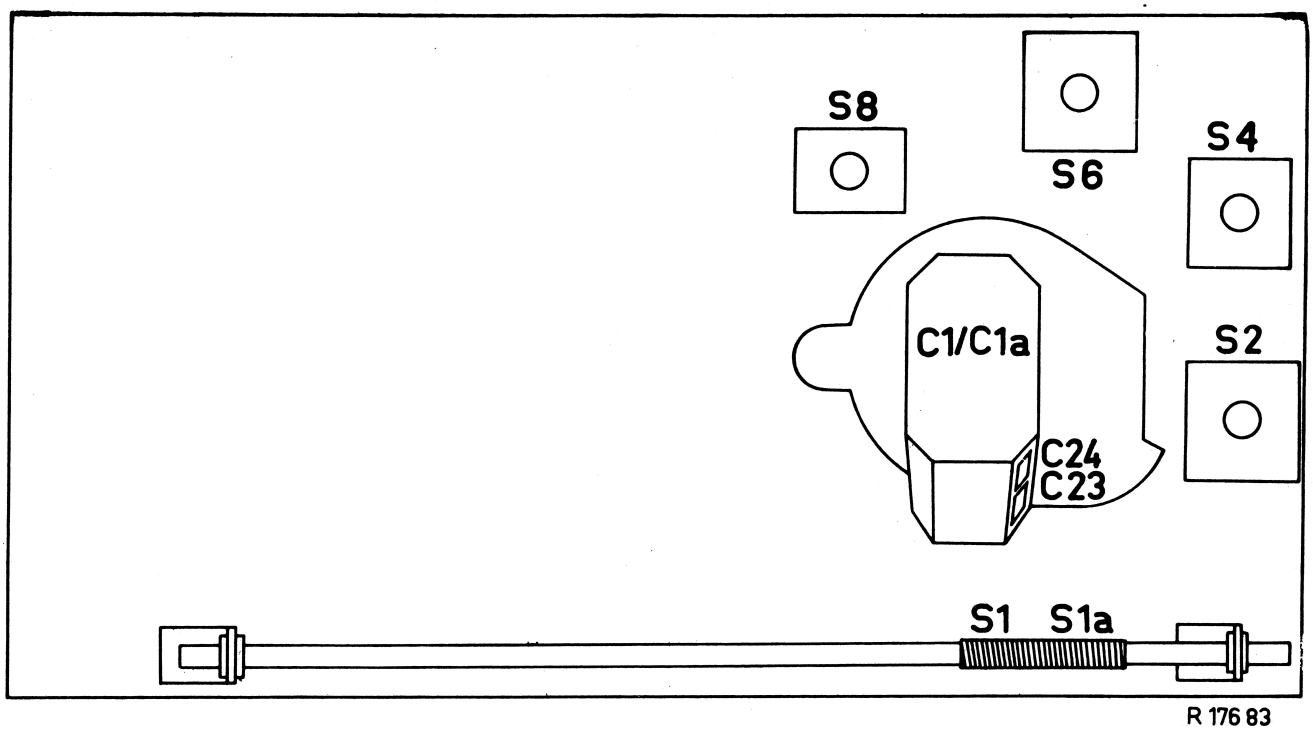

ALIGNMENT:

I.F. circuits

Tuning capacitor	Signal	Adjust to max. output
Min.	452 kc/s via. ·1mF condensor to base of TS1.	S8, S6, S4.
Repeat the above sequence		

R.F. circuits -

The signals are applied to the ferroceptor by means of a coupling winding.

Tuning capacitor	Signal	Adjust to max. output
Max. Min.	512 kc/s 1630 Kc/s	S2 Slug C23 (Front of gang)
Repeat the above sequence		
	Tune receiver to 600 kc/s Tune receiver to 1500 kc/s.	S1 by carefully adjusting position on aerial rod. C24 (rear of gang)
Repeat the above sequence		

S				14.11.12.10.16.13.			1.	9.	1a.	7.	5. 2
C	30				16.17.			1.12.14.11.23.24.1a.		6.	5. 2.
R	36		20		16						

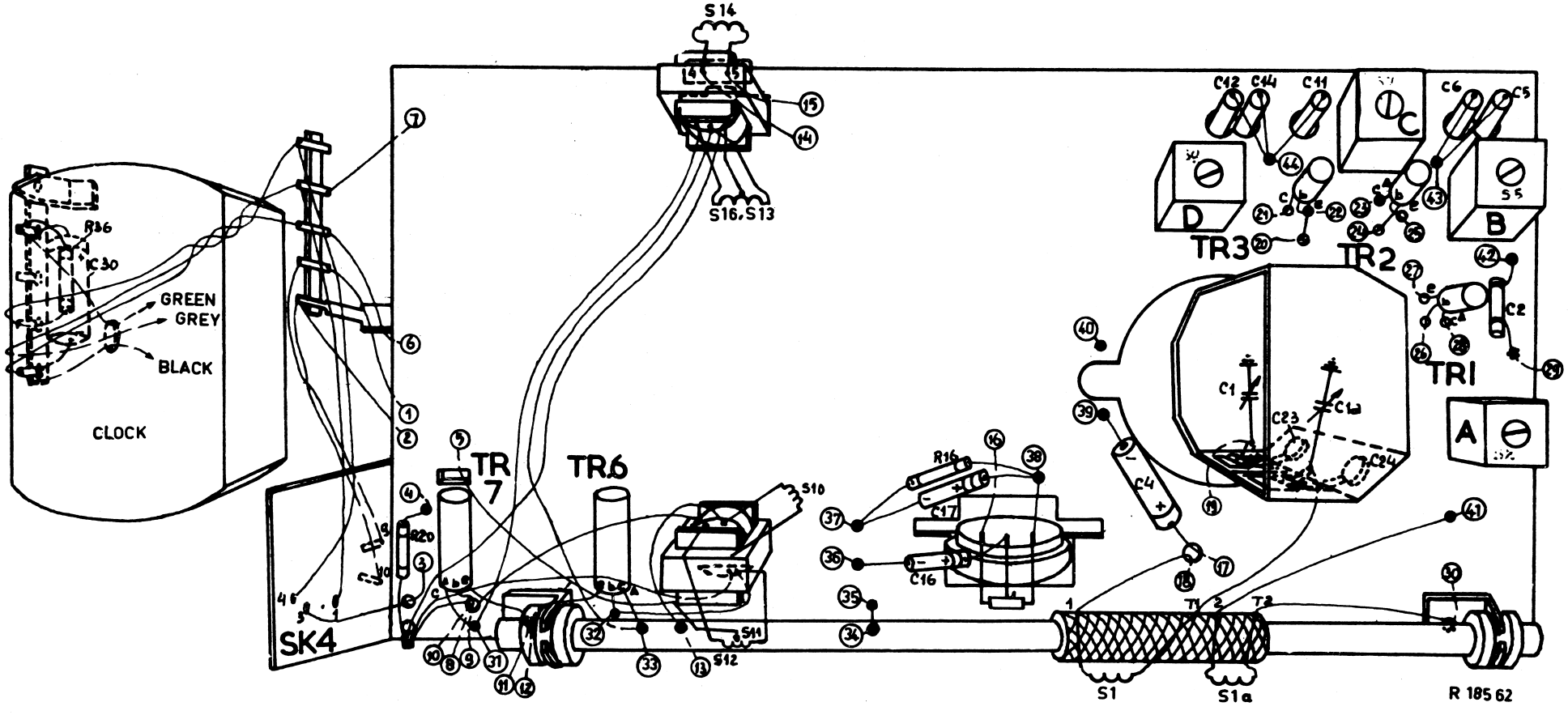

| | | |

L2X97T-00R

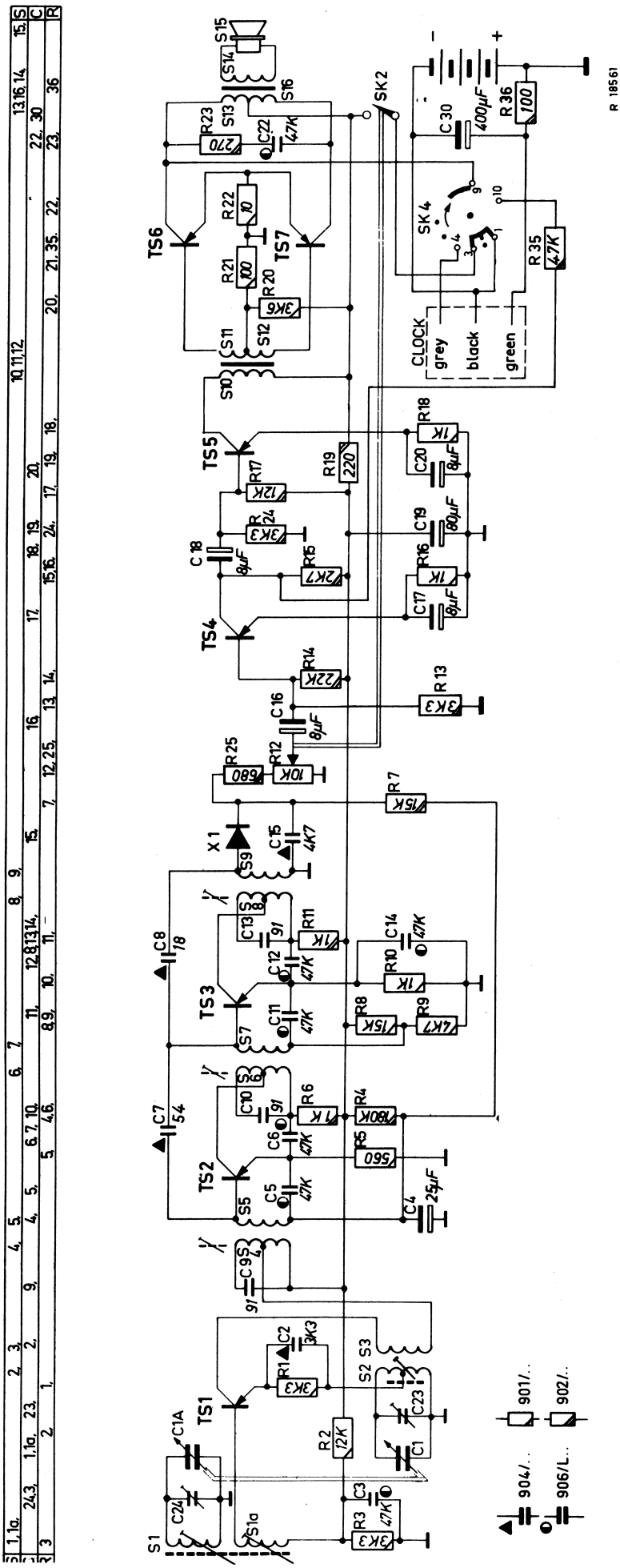
TS1
TS2
TS3
TS4
TS5
TS6
TS7
SK2
SK4
CLOCK
grey
black
green
R 18561
904/..
906/L..
901/..
902/..