Private and Confidential

For Trade Use Only

"HIS MASTER'S VOICE"

SERVICE MANUAL

for

CHASSIS TYPES PM, PP

(SERIES 1)

Manufactured and Distributed by
E.M.I. (AUSTRALIA) LIMITED
(Incorporated in N.S.W.)
HOMEBUSH - N.S.W.

PART No. 683-3971

INTRODUCTION

This service manual is intended to provide all relevant information for servicing "H.M.V" 110° television receivers type PP and PM (manually-operated).

One basic chassis is employed, using 15 valves plus diodes. PM and PP differ only in the size of base-boards.

An aerial selection switching facility is available for all models, if required, as an optional extra fitting.

The models covered in this manual are:

Chassis Type	*No. Valves*	*Picture Tube*	*Styling*
PM	15	23" Bonded Face	Consolette (Metal Wrap) (9A)
PP	15	23" Bonded Face	Console (AE)
PP	15	23" Bonded Face	Lowboy (BD)

CAUTION

The normal B + voltages in these receivers are dangerous. Use extreme caution when servicing The high voltage at the picture tube anode (16,000 volts) will give an unpleasant shock but does not supply enough current to give a fatal burn or shock. However, secondary human reactions to otherwise harmless shocks have been known to cause injury.

Always discharge the picture tube anode to the chassis or to its aquadag coating before handling the tube. The picture tube is highly evacuated and if broken it will violently expel glass fragments. When handling the picture tube, always wear goggles.

SPECIFICATIONS

POWER SUPPLY:
230, 240, 250 volts, A.C., 50 c.p.s.

CONSUMPTION:
All receivers: 175 watts.

AERIAL INPUT:
300 ohms balanced.

INTERMEDIATE FREQUENCIES:
Vision carrier: 36.875 Mc/s.
Sound carrier: 31.375 Mc/s.

FUSES:
Mains (2): 1.5 Amps. (Black and White).
H.T.1: 1.5 Amp. (Yellow).
H.T.2: 250 mA. (Red).

VALVE COMPLEMENTS

V1	6ES8	R.F. Amplifiers
V2	6HG8	Frequency Changer
V3	6BY7	1st I.F. Amplifier
V4	6EJ7	2nd I.F. Amplifier
V5	6EJ7	3rd I.F. Amplifier
V6	6DX8	Video Amplifier and Noise Inverter
V7	6CS6	Noise Gated Sync. Separator
V8	6U8	Sound I.F. Amplifier and Gated A.G.C.
V9	6AU6	Sound Limiter
V10	6GW8	Audio Driver and Audio Output
V11	6BM8	Blocking Oscillator and Vertical Output
V12	12AU7	Horizontal Multivibrator
V13	6CM5	Horizontal Output
V14	1S2	EHT Rectifier
V15	6AL3	Damping Diode
MR1	OA90	Vision Detector
MR2	OA210	Mains Rectifier
MR3	OA210	Mains Rectifier
MR4	M3	Clamping Diode
MR5	AA119	Ratio Detector
MR6	AA119	Ratio Detector
MR7	OA91	Phase Discriminator
MR8	OA91	Phase Discriminator

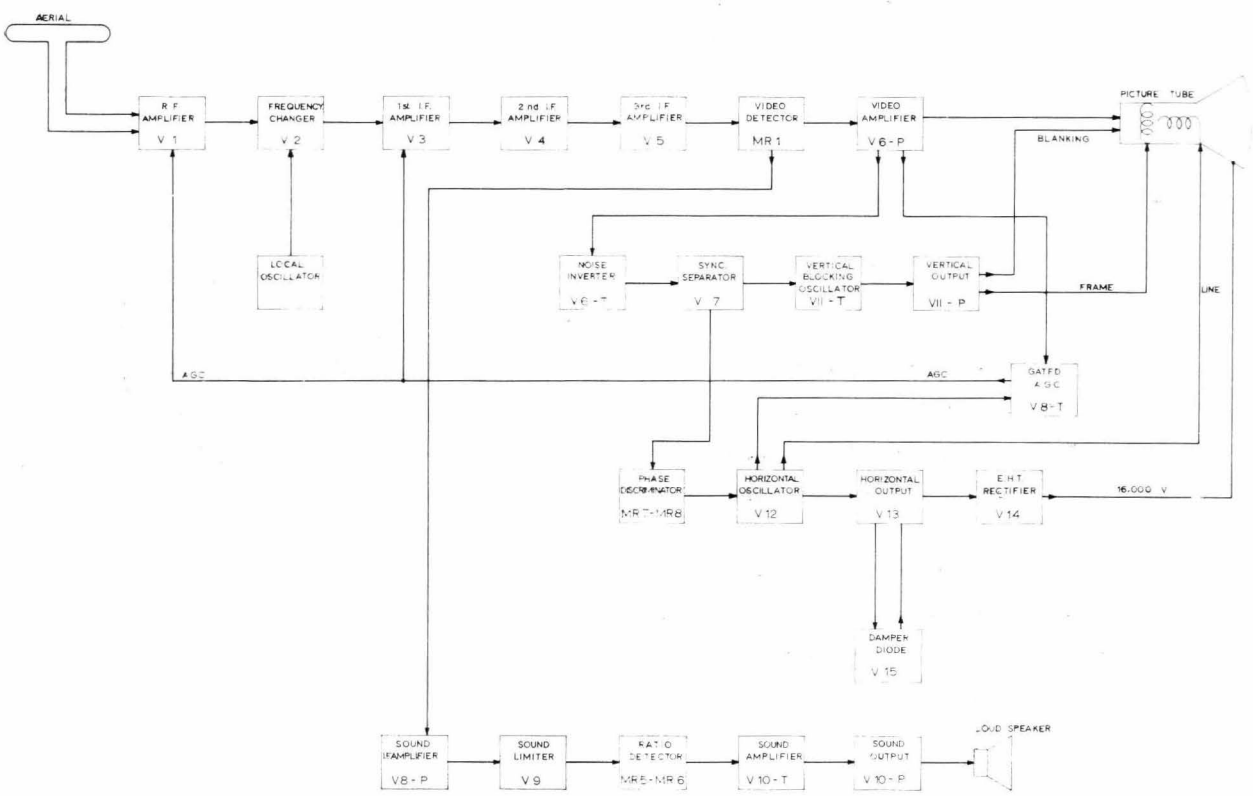

BLOCK DIAGRAM — 15-VALVE CIRCUITS

SUMMARY OF FEATURES

These features are common to both types of receiver:

1. The turret tuner has a pre-set fine tuning facility, which individually adjusts the oscillator tuning on each channel.

2. Linear phase treatment of the IF response ensures the best possible definition with freedom from overshoot or smearing, allowing non-critical fine tuning control.

3. The overall frequency response of the system is within 6 db from D.C. up to 4.7 Mc/s.

4. DC coupling from the video detector through to the picture tube ensures that a true black is retained and that all shades retain their true relationship to black. This prevents fading to grey and gives accurate portrayal of night-time scenes.

5. Time - gated AGC is employed, giving immunity from the effects of impulse noise and has a fast action to cope with rapid fading from "aircraft flutter." A variable delay on the tuner is provided to maintain full RF gain on weak to moderate signals, thus minimising frequency converter noise. This delay can be adjusted for best results when the receiver is first installed.

6. A noise inverter is used, before the sync. separator, giving protection to the input circuit and preventing paralysis of the sync. separator action following large bursts of impulse noise.

7. The audio amplifier with ample feedback gives excellent quality sound with ample power. A compensated volume control maintains tonal balance at all volume settings.

A variable tone control is fitted and frequency response can be adjusted from full and normal to attenuated high and low frequencies simultaneously. This system is used rather than accentuated or attenuated bass or treble, so that the intelligibility of the signal in "fringe" conditions will be retained.

8. The horizontal hold circuit is a multivibrator employing a stabilising coil in the oscillator anode circuit and this, together with the cathode coupling employed, gives a stable oscillator virtually unaffected by large HT variations. This stability, together with an adequate pull-in range, renders a front horizontal hold control unnecessary. A pre-set control is provided on the back of the receiver.

9. A linearity control of the horizontal deflection circuit that can be adjusted by an indication on a multimeter gives the advantage that the linearity can be set without the need for a transmitted test pattern.

10. Vertical retrace lines are eliminated by Vertical Flyback Blanking.

11. The picture tube is of the bonded face type and does not readily attract dust. Furthermore, it may be very easily cleaned when fingermarked. The reduction in the number of reflecting surfaces improves the rendition of picture black., i.e., scattered light, which otherwise illuminates black areas of the picture and reduces contrast.

12. The user controls are reduced to the minimum necessary to ensure correct operation, which is made as simple as possible. There are no interacting controls, and since the receiver is completely DC coupled then the Brightness control will vary the light output of the picture tube and the Contrast control will vary the depth of shades without any interaction between them.

13. Silicon Junction Diodes are used in a voltage doubler full-wave power supply. These diodes are noted for their robustness, economy of power and high surge rating. Since they have no heated cathode they cannot be damaged by operation on low mains voltage as is the case with valve rectifiers. Thermistor protection is included in the power supply on all models, to ensure that diodes and electrolytic condensers are not subjected to large surges when first switching on the receiver.

14. Accessibility for service is excellent. The chassis is hinged and can be swung down to give ready access for servicing in the home. If it is necessary to remove the chassis for workshop servicing ,the chassis may be lifted straight out of its hinged supports.

If desired, the complete chassis and picture tube assembly may be removed as a complete working unit.

15. A noise-gated sync. separator is used to give the best synchronisation obtainable, necessary for receivers operating under "fringe" conditions.

16. To keep impulse interference to a minimum in the audio output and when operating under adverse conditions, a sound IF amplifier is included before the sound limiter. This gives a substantial increase in gain and gives virtually noise-free sound, even under extreme "fringe" conditions.

17. Current feedback to keep a constant deflection current in the coils is used in the vertical deflection circuit. This feature holds the height constant as the deflection coils warm up.

18. Transformer-coupled focusing is employed to ensure good overall edge-to-edge focus. Degradation of definition due to change in spot shape across the tube is thus obviated.

19. Facilities can be provided for the automatic switching of up to three different aerials, depending on frequency and transmission polarisation, to the aerial terminals on the tuner, by means of the multi-aerial connector block and the wafer switches on the channel-changing mechanism (extra fitment).

CIRCUIT DESCRIPTION

RF INPUT

The input to the turret tuner is to a centre-tapped transformer which presents an impedance of 300 ohms (balanced).

RF amplification is achieved with a type 6ES8, double triode (V1), in a cascode circuit. The two sections of this stage are connected in series for DC. The grounded cathode input section is neutralised and is also controllable by AGC from the mains chassis. Because of the series DC connection of the two portions, AGC voltage to one section also effects control on the other section.

Coupling between the two sections of the cascode is direct and the coil between the two maintains amplification on the high frequency channels.

Inductive coupling is used between the cascode and mixer. V2, a type 6HG8, combined triode-pentode, is used as oscillator and mixer. The oscillator is a Colpitts circuit operating above signal frequency. Injection to the mixer input is by capacitive coupling. The fine tuning variable capacitor is connected directly across the oscillator inductance. The capacitor is spring-loaded at one end and adjustment of range is determined by a range determining screw located on the front end of the tuner.

Adjustment on each channel is provided by means of an adjustable screw operating a cam to vary the fine tuning capacitor. The adjustable screw is varied by depressing the fine tuning knob, located within the channel selector knob, and rotating it in either direction. The extent of rotation is approximately 3 to 4 complete turns.

The intermediate frequency output of the tuner (vision 36.875 Mc/s., sound 31.375 Mc/s.) is coupled to the IF channel of the main chassis through a capacitor C10.

The heater circuit is filtered by a Ferrite bead through which a heater wire is passed. The bead concentrates the field around the wire, increasing its self-inductance so that it acts as a choke.

IF AMPLIFIER

The tuner IF output is coupled to the grid of the first IF Amplifier V3 via the bottom end of the coil L21. There are three IF amplifying stages and AGC voltage is applied to V3.

V5 is coupled to the video detector MR1 by inductive coupling.

Trap circuits of L22, with L24 (coupled to L23) and L27 (coupled to L26) attenuate the carriers of adjacent vision at 29.875 (L22), the adjacent sound 38.375 (L24) and sound at 31.375 (L27).

The adjacent vision trap (L22) is set in the factory to approximately 28.5 Mc/s., which is further removed from the main response than the nominal adjacent vision carrier frequency 29.875. This allows for the fact that, in fringe areas, receivers are seldom tuned to the correct nominal frequencies and are usually tuned for maximum contrast by shifting intermediate frequencies lower than normal. The slug of this trap is accessible at the rear of the chassis and may be adjusted on site to minimise an interfering carrier on the low frequency side of IF. (High frequency side at RF).

V3 has a small unbypassed cathode resistor R23, to minimise detuning of the grid circuit with varying input levels.

VIDEO AMPLIFIER

The detected video output of the germanium diode MR1 is amplified in the pentode section of V6. L31, L32, L33 and L34 are peaking chokes which maintain the high frequency components of the vision signal fed to the picture tube. The 5.5 Mc/s. component is removed by the combined transformer and trap, IFT4.

INTERCARRIER SOUND

The output of IFT4 is fed to the Sound IF amplifier, V8. The output from the limiter is demodulated by the ratio detector, IFT6 and diodes, to provide the audio signal which passes through the volume control to be amplified in the driver triode and output pentode sections of the Audio Output valve. Feedback is applied in both audio circuits.

A full margin of sound gain is provided so that 1.9 watts undistorted output is obtained from sound signals which do not fully modulate the carrier. Moreover, the sound output stage has a controlled overload characteristic which does not "paralyse" but merely clips the peaks and so remains comparatively free from audible distortion.

After serial number 01600, all chassis incorporate a modified sound output stage—detailed in the circuit for the PP-PM chassis. This modification was to reduce hum level by using an improved filtering circuit.

NOISE INVERTER

The anode load of the noise inverter is formed by the resistor coupling the sync. separator to the video output. The valve is biased such that it cannot conduct on the positive sync. tips. However, noise pulses appearing more positive at its grid will drive the valve into conduction, causing current to flow and a voltage drop across this resistor. Consequently a noise pulse will appear less positive, at the anode of the noise inverter, than a sync. tip and the sync. separator will not conduct on the noise pulse since the pulse will now fall outside of the sync. separator's grid base.

NOISE-GATED SYNC. SEPARATOR

Video signal, with sync. tips positive, is applied to the suppressor grid of a 6CS6 from the output of the video amplifier. At the same time, video signal with sync. tips negative, is applied to the control grid of this valve, via the potentiometer R56, R57, and is so arranged that the negative excursion of the signal will not affect the current through the sync. separator valve. How-

ever, when a noise pulse with greater negative amplitude than the sync. tips, occurs at the control grid, then the current through the valve is cut off and the anode voltage will rise to HT, giving no spurious sync. output. Double protection is thus afforded by the Noise Inverter and the Noise-gated Sync. Separator.

GATED AGC

Video signals with sync. tips positive are fed from the Video Amplifier anode to the grid of the AGC valve, and the valve is biased so that it will only conduct on sync. tips. During line flyback, a positive pulse is applied to its anode via the 68 pF coupling capacitor and the valve will conduct when this pulse at its anode and a sync. tip at its grid coincide. The valve cannot, therefore, conduct in the period between sync. pulses and is thus immune to noise pulses appearing in the period between sync. pulses.

The current through the valves will depend on the height of the sync. pulses at its grid and the height of these sync. pulses is adjusted by the contrast control. The cathode of the AGC valve is held at about 50 volts. Operation of the Contrast Control will vary the bias applied to the grid of the AGC valve and so increase or decrease the height of sync. tips in respect to the fixed cathode volts. Increasing the height of the sync. tips will cause the valve to conduct harder and will produce more AGC volts, reducing the gain of the receiver and decreasing the voltage available to drive the CRT cathode. Decreasing the height of the sync. tips will reduce the conduction of the AGC valve, thus producing less AGC volts, increase the gain of the receiver and increase the volts available to drive the CRT cathode. Increasing the height of the sync. tips therefore reduces the contrast, and decreasing the height of the sync. tips will increase the contrast.

The ratio of IF AGC voltage to Tuner AGC voltage is important and the ratio can be adjusted by means of RV3. If the ratio is too small then, even on large signals, the tuner will be biased back, the IF amplifier will be operating at an unnecessarily large gain, and converter noise will be evident in the picture. If the ratio is too large, then no controlling bias will be applied to the tuner and it will be held at the clamping voltage and all control will be made in the IF amplifiers. This can cause severe overloading of the IF amplifier.

VERTICAL DEFLECTION CIRCUITS

Vertical sync. pulses from the sync. separator are used to synchronise the blocking oscillator, T3 and the triode portion of the valve. "Height" is adjusted by varying the DC potential fed to the blocking oscillator anode and "Vertical Hold" is adjusted by varying the time constant of the blocking oscillator grid circuit. The sawtooth waveform from the blocking oscillator is applied to the grid of the output amplifier and a sawtooth current waveform appears in the vertical output transformer. A feedback voltage is developed across R117, R118, from the current in the deflection coils. This voltage is stepped up to the input grid of the vertical output valve. A potentiometer, RV10, is provided for adjustment of linearity.

HORIZONTAL OSCILLATOR AND AUTOMATIC PHASE CONTROL

Automatic frequency and phase control is obtained by means of a DC controlled, cathode-coupled, stabilised multivibrator controlled by a germanium diode phase discriminator.

Sync. pulses from the sync. separator are fed into the centre of the discriminator and a sawtooth waveform from the multivibrator output is fed across the diode loads.

During "in lock" conditions, the large negative going sync. pulse clamps a part of the sawtooth to earth. If the oscillator is correctly placed, this part of the sawtooth is already at zero potential, and there is no output from the discriminator. If the sync. pulse arrives earlier or later, a negative or positive output will be obtained, zero output indicating correct phasing or absence of either sync. pulse or sawtooth. This latter condition is used in setting up the horizontal hold circuit in the "Adjustments" section of this service manual.

Due to normal multivibrator action, the anode current in the first half of V12 is cut-off at the end of scan, and the anode rises to HT from a potential dictated by the discriminator output voltage on its grid (pin 2). A positive increase in this grid causes a greater excursion in the anode which is coupled to the grid of the second half of V12 (pin 7). The length of the scan period is determined by the time taken for the grid circuit of the second half of V12 to discharge to the cut-on potential of this valve. When this grid receives a larger waveform coupled from the first anode, it draws more grid current, charging the coupling capacitor more negative, thereby increasing the time taken for the grid circuit to discharge, lengthening the scan period. Thus a positive output from the discriminator lowers and a negative output raises the repetition frequency of the oscillator.

HORIZONTAL DEFLECTION CIRCUITS

The horizontal oscillator produces a negative pulse output which is timed to cut off the horizontal output valve at the end of a scan. When cut off sharply, the magnetic field that has been established in the horizontal output transformer during the scan collapses and the oscillatory circuit comprised of the transformer inductance and stray capacitances tends to "ring." However, after one-half cycle of oscillation the damping diode starts to conduct. During the "flyback" time the magnetic energy has established itself in the reverse direction, and the picture tube spot has returned to the left-hand side of the screen.

When the damping diode conducts it permits current to flow at a controlled rate through part of the transformer. This current, passed by the auto-transformer into the deflection coils, forms the initial part of the horizontal scan. As the

damper ceases to conduct the line output valve takes over and supplies the necessary current to complete the scan, at which point a further negative pulse on the grid starts the cycle over again.

During flyback a high voltage pulse is produced at the anode of the EHT rectifier, which is peak - rectified and then smoothed by the capacitance between inner and outer bulb coatings of the picture tube, and supplies EHT of approximately 16,000 volts.

Energy recovered by the damping diode produces a boosted HT voltage of 830 volts, which is divided down to 560 volts for supplying the G2 electrode voltage of the picture tube.

The sawtooth scanning current in the primary winding of the focus transformer, T7, produces in the secondary a large parabolic voltage waveform which is fed direct to the focus electrode of the CRT and the cold end of the secondary is connected to a suitable voltage to give good overall focus.

INSTALLATION

The receiver is shipped from the factory with the picture tube installed and all controls pre-adjusted for normal operation. It should only be necessary to ensure that the mains tapping is correctly adjusted for the mains voltage existing in the particular area and a suitable aerial connected to the aerial terminals.

In very strong signal areas it may be necessary to use an attenuator in the aerial lead to avoid overloading the receiver.

The various operating controls should be checked for proper operation, and their use demonstrated to the purchaser as described in the installation manual. It is necessary to remove the back of the cabinet to gain access to the mains adjustment plug.

PICTURE SHIFT

Small shifts in position of picture may occur due to the effect of the earth's magnetic field in different locations. The picture may be re-centred by rotating the two shift magnets on the tube neck behind the deflection yoke.

Rotate the centring magnet assembly to shift the picture in the required direction, and move one of the magnets with respect to the other to change the strength of the field and hence the amount of picture shift.

PICTURE TILT

If the picture is not square with the edges of the mask, the deflection coils should be rotated until the picture is squared up. It may be necessary after this operation to centre the picture by means of the shift magnets.

AGC

The AGC control is normally pre-set in the factory but if it is necessary to adjust it at any time the procedure is to turn the control to the maximum anti-clockwise position then, observing the picture, advance the control until the noise or "snow" in the picture is no longer reduced. The receiver should then be checked on all channels to ensure that no overloading is evident, which may be due to the control being adjusted too far in a clockwise position, and that the minimum noise condition has been achieved for all signals. This control may need adjustment in strong signal areas to remove "herringbone" pattern.

FUSES

Four fuses are provided, two in the mains circuit and two in the HT circuits. Ensure that they are replaced with similar types in their respectively colour-coded holders.

NOISE INVERTER

The cathode bias of the noise inverter can be adjusted on installation (if necessary) by means of a pre-set control on the rear panel of the receiver. Tune to the strongest signal and turn contrast control to maximum. Turn the Noise Inverter control in an anti-clockwise direction until the picture tends to go out of lock. Turn control slightly clockwise so that picture returns to lock. Check that receiver locks quickly on all channels when changing channels.

SERVICING

The vertical chassis of these receivers has been specially designed to make servicing as easy as possible.

All valves, test points and components are accessible for service with the back removed and the chassis in either its normal or swing-down position. This includes the tuner and associated controls.

To prepare the chassis for service, remove the front channel selector and fine tuner knobs. Press down firmly on aerial block with thumb. Aerial block will then spring out, allowing removal of back without disconnecting leads. Remove two screws securing the metal back to the cabinet. Remove back by lifting out, first at base. Remove the PK screw securing the L.H. side of the tuner to the cabinet front (viewed from rear).

Loosen the wing-nut on the L.H. side of the chassis and withdraw the tuner and bracket assembly. (Note: This assembly is secured to the picture tube clamping framework by means of a shaped plate fitting into shaped clamps. The tuner and panel may be withdrawn to the rear but must be lifted to clear the safety catch at the front end of the shaped plate for complete removal). Having withdrawn the tuner, it may be dropped to be parallel to the chassis and with a special safety catch lug fitted into the chassis hole and clamped to it by tightening the thumbscrew.

Loosen the two thumbscrews on the top corners of the chassis and swing the clamp rods away from the chassis. The chassis, complete with tuner, may then be swung down on the pivots at the chassis rear lower corners and held secure by the stops in the pivotal quadrants.

The yoke and EHT leads are long enough to prevent strain in the chassis lowered position and the chassis will operate satisfactorily in this position for service, if necessary.

The chassis may be removed for bench service by first unplugging the picture tube and yoke leads, raising the chassis to approximately 45° position, and then lifting the chassis clear of its pivotal mounts.

To reassemble, complete the above operations in reverse, ensuring that the yoke and EHT leads are positioned correctly and are not clamped under any components when the chassis is returned to its original position and that the earthing braid bonding the chassis to cabinet back is in place on the R.H. chassis clamp.

DISMANTLING

Chassis Type PP in Cabinets Type AE-BD

Remove the aerial leads.

Remove the aerial terminal block.

Remove the two back-securing screws and then remove the back.

Proceed as described under the heading of "Servicing" to swing the chassis "down." In this position access is gained to the two 5/16-inch bolts securing the chassis mounting board to the cabinet base. Unscrew these two bolts and replace and clamp the chassis in its normal position.

Remove the two machine screws at the top of the picture tube holding the CRT clamp to the top front of the cabinet.

Remove the speaker leads from the chassis.

Remove the entire assembly by sliding from the rear of the cabinet.

SPEAKERS IN CABINET TYPE AE

To remove the speakers for test or replacement in cabinet type AE, the speaker baffle grille silk must first be removed.

Two wood screws are accessible under the front centre rail to remove the grille silk. The backing for the grille silk is slightly bowed over a strain block on the speaker baffle board and when the two wood screws are removed, they may be used as grips to ease the top of the grille silk forward when it may be lifted out of the groove at the bottom of the cabinet.

The speakers are secured to the baffle board by wood screws accessible from the front.

A cement block contained in a plastic bag is bolted to the bottom of the cabinet for balance when the chassis is removed. This block is accessible from the front of the cabinet through the speaker holes in the baffle board of the vented enclosure.

SPEAKERS IN CABINET TYPE BD

The speakers in the BD cabinets are mounted in a similar fashion to those in AE cabinets. The speaker grille silk must first be removed by removing two screws (one in later versions) located underneath the front of each speaker compartment. The screws securing the speakers are then accessible from the front of the cabinet.

DEFLECTION YOKE

First remove the picture tube socket. Loosen the clamp-fixing screw on the rear of the yoke assembly, remove the yoke plug from the socket on the rear of the EHT assembly and slide yoke over neck of tube. When replacing yoke, do not use force and do not tighten clamping screw until set has been operated and picture is squared up.

REMOVAL OF PICTURE TUBE

Having removed the chassis and picture tube assembly, remove chassis from baseboard and remove yoke from CRT. Take care that CRT does not fall forward on its face when chassis is lifted from baseboard. Remove the spring which rests against the aquadag coating on the rear of the picture tube. Slacken the nut at the side of the tube securing the retaining strap and ease the tube out carefully, meanwhile supporting it around the mounting ring. The rubber mounts may be eased over the ears at the tube face corners and then the tube may be carefully withdrawn from the strap.

Note: The tubes are heavy and particular care in handling is necessary. It is recommended that protective goggles, apron and gloves be worn by personnel handling picture tubes to prevent personal injury should an implosion occur due to mishandling. The picture tube should be carefully handled and never placed face-down on a bench. Always ensure that it is placed on a soft, clean surface, such as felt, so that the face does not become scratched. Wherever possible, keep tubes in the original manufacturer's carton.

Chassis Type PM in Cabinet Type 9A

REMOVAL OF CABINET

Disconnect the aerial leads and remove the aerial bracket from the metal back.

Remove the cabinet back by undoing five securing screws.

Remove two PK screws located underneath at each end of the cabinet, securing cabinet wrap to baseboard.

Spring securing straps fixed to front escutcheon and holding rear edge of cabinet wrap, away from rear edge of wrap.

Remove cabinet wrap.

REMOVAL OF FRONT ESCUTCHEON

Remove channel selector and fine tuner knobs.

Remove two PK screws securing escutcheon to baseboard runners (underneath at front).

Remove four PK screws holding picture tube top support brackets to escutcheon.

Disconnect five securing straps fixed to edge of escutcheon.

Remove front escutcheon.

During the course of production of these receivers, the Company reserves the right, without notice, to make any modifications or improvements in design which may be necessary to meet prevailing conditions.

Information concerning changes, which are likely to be of benefit to retailers and servicemen, will be notified as far as possible by issuing a Technical Data Sheet.

Any further service information may be obtained by addressing an inquiry to "The Service Division," E.M.I. (Australia) Limited, 575-577 Parramatta Road, Leichhardt (Telephone 560-8444); or Interstates Branches as below:

E.M.I. (Australia) Limited

109 Burwood Road, Hawthorn, Victoria.
Emitron House, 105 Port Road, Hindmarsh, South Australia.
457 Beaufort Street, Highgate, Western Australia.
252 Argyle Street, Hobart, Tasmania.
17 The Quadrant, Launceston, Tasmania.
Bramble's Building, National Park Street, Newcastle West, N.S.W.
83 Robertson Street, Fortitude Valley, Brisbane, Queensland.
C/- A. Leenders, 13-17 Murray Street, Rockhampton, Queensland.

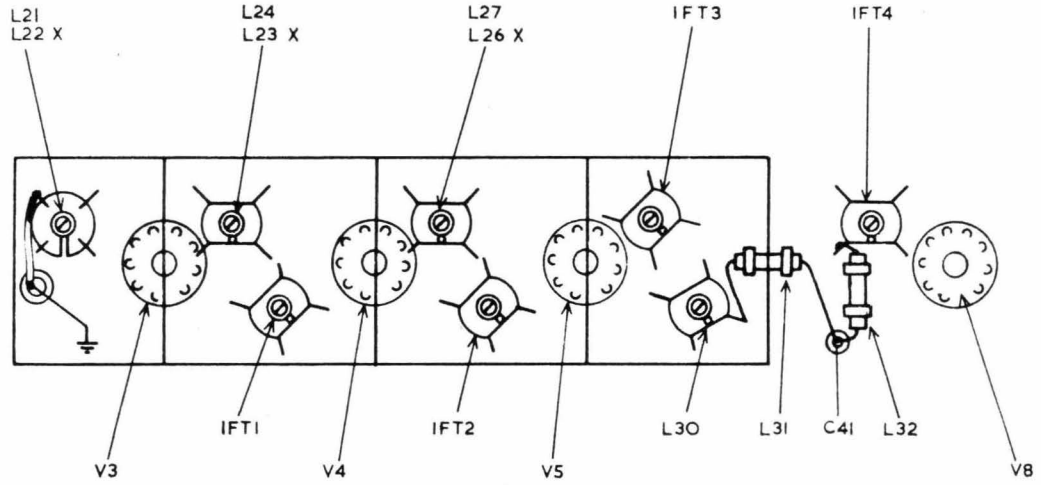

LOCATION OF COILS FROM UNDERSIDE OF CHASSIS.

X INDICATES COIL NEAREST CHASSIS.

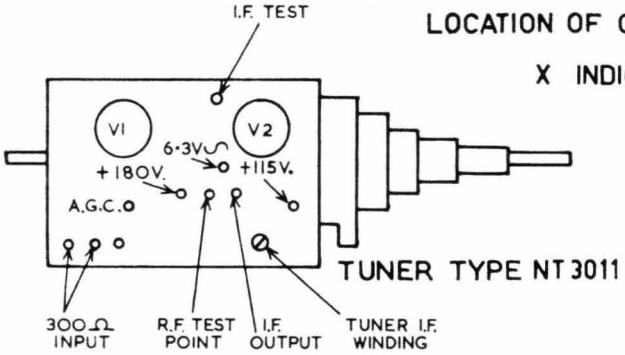

TUNER TYPE NT3011

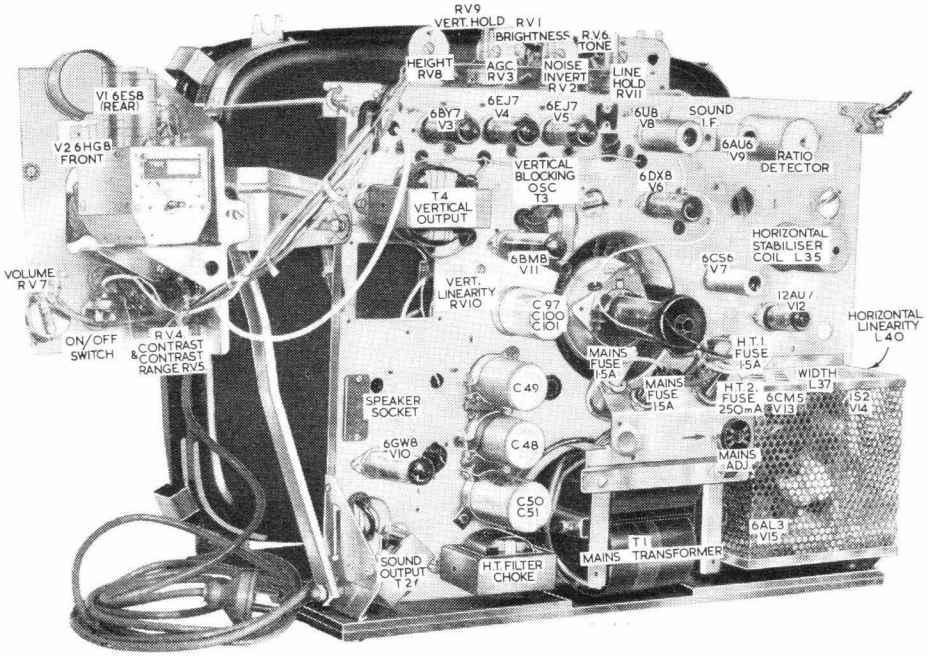

REAR VIEW — 15-VALVE CHASSIS

ADJUSTMENTS

HORIZONTAL LINEARITY

A typical multimeter employing a 100 ohm 1 mA fullscale deflection meter, when on 100 mA range, has a total resistance of 1 ohm. If such a meter is connected from pin 8 of the Horizontal Output valve to earth, *i.e.,* across the 1 ohm metering resistor, it will indicate half of the current flowing in the cathode of the valve. The Horizontal Linearity control should be adjusted to reduce this current to a minimum.

HORIZONTAL HOLD

Disconnect sync. pulses by removing the sync. separator valve, V7, 6CS6. Short-circuit the Horizontal Stabilising coil. (Note: The chassis must be swung down. See "Service Notes" for access to the horizontal stabilising coil. The exercise may be continued with the chassis in this condition). Adjust the Horizontal hold control so that the picture "floats" or locks weakly. Remove the short across the stabilising coil and adjust the core of this coil so that the picture again floats or locks weakly. Replace the sync. separator valve.

CONTRAST RANGE

Turn the Contrast Control to its maximum clockwise position and adjust the Contrast Range control to give sync. tips at 190 volts at the Video anode, read on a DC coupled oscilloscope.

The contrast range control is on the rear of the contrast or picture control and may be adjusted using a long, thin screwdriver inserted down the shaft of the picture control after the knob has been removed. Alternatively, it may adjusted from the rear.

ALIGNMENT

VISION IF

To align the vision IF amp. a sweep generator and a marker generator, both covering the range 28.5 to 38.5 Mc/s are required, together with a display unit. The marker generator may be a signal generator and the display unit a CRO. These instruments should be interconnected as described in the instructions supplied with the sweep generator. The sweep generator should be terminated with a resistor equal to its output impedance and connected to the receiver as shown in Figure 3.

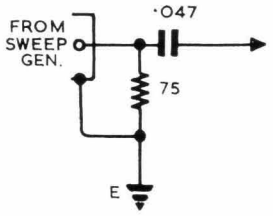

E–EARTH OF CIRCUIT INTO WHICH SIGNAL IS BEING INJECTED.

FIG. 3

Before commencing alignment, remove slugs from L24 and L27.

Connect a bias supply of 18 volts across the IF AGC (C59). Connect the display unit between L31 and L32 junction and earth. Throughout the alignment the display unit should be adjusted to present a reasonable amplitude display from a signal 2.5 volts peak-to-peak, and the output from the IF strip should be maintained at that level by varying the output from the sweep generator.

Because of the high gain of the receivers, care should be taken to ensure that all components replaced are on short leads and are placed in exactly the same position as the original part. Care must also be taken to prevent feedback in interconnecting leads of alignment equipment.

The following procedure must be followed step by step, and do not proceed to the next step until sure that each response has been accurately obtained.

(1) Connect the sweep generator via the network in Fig. 3 to pin 2 of V5. Adjust the slug in the IFT3 to peak response at 34 Mc/s. (Slug in position furthest from chassis) and L30 (slug nearest chassis) to achieve a symmetrical response as shown in curve "A." To remove any hole in the response, screw the slug in L26 away from the chassis until the hole disappears beyond the 29.875 Mc/s. mark.

(2) Remove the sweep from V5 and reconnect to pin 2 of V4, using the same terminating pad. Maintain the level of the display unit constant by regulating the sweep output. Adjust the slug of L26 to peak response at 34 Mc/s., the position nearest the chassis. Adjust with the slug in IFT2 to keep the response symmetrical as in curve "B." To remove any hole in the response, screw the slug L23 away from the chassis until the hole disappears beyond the 29.875 Mc/s. mark.

(3) Remove the sweep from V4 and connect with the same terminating pad to pin 2 of V3. Adjust slug in L23 to obtain maximum response at 34 Mc/s. and IFT1 for symmetry. If a hole appears in this response, short out the co-axial lead from the tuner temporarly (on lug of L21). Adjust to curve "C."

(4) Remove the sweep from V3 and connect to Test Point 1 on the tuner (IF alignment point), using the same terminating network with a suitable probe. Adjust the slug in L11 (IF output coil located adjacent to V2 on the tuner) for maximum output at 34 Mc/s. Adjust slugs in both L21 and L11 to obtain the curve "D." Slug in L21 furthest from chassis.

(5) (a) Insert the lug with retaining rubber string into L24 and adjust to a minimum at 38.375 Mc/s. Ensure that the response is at least 48 dB down at 38.375 Mc/s.
(b) Insert the slug in L27 and adjust so that the response is down to between 25 and 28 dB below peak response at 31.375 Mc/s. (See curve "E").
(c) The slug in L22 is adjusted for a minimum at 28.375 Mc/s.

(6) Check overall response (Curve "E") and adjust if necessary. Check stability by removing the bias voltage and reducing the input. The response should remain substantially unchanged.

SOUND I.F. ALIGNMENT

The following equipment is necessary to carry out this procedure:

(i) A C.W. Oscillator accurately tuned to 5.5 Mc/s. by a crystal controlled reference.
(ii) A 20,000 ohm / volt meter (Model 8, AVO or similar type).
(iii) A DC V.T.V.M.
(iv) A peak-to-peak detector as shown.

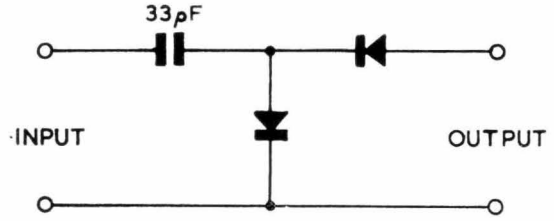

FIG. 4: Peak-to-Peak Detector.

5.5 MC/S. NULL TRAP (IFT4)

IFT4 is a combined null trap and transformer, working at 5.5 Mc/s. When tuned in the factory,. both primary and secondary cores are tuned together to give a zero output at 5.5 Mc/s. at the video grid, and a maximum transfer to the intercarrier amplifier. This can only be done accurately with a sweep oscillator and a suitable display having a high gain at 5.5 Mc/s. Once set, however, it should not need re-tuning unless quite large circuit alterations have been made.

Should it be necessary to re-tune IFT4, the following procedure should be adopted:

(1) Inject 5.5 Mc/s. at approximately 100 mV between the junction L31 and L32 and earth (disconnecting the grid peaking choke L31).
(2) Connect the input of the peak-to-peak detector illustrated (Fig . 4) to CRT cathode, pin 7. Connect the output of the peak-to-peak detector to a 20,000 ohm/volt meter on the 50 micro-amp range.
(3) Adjust primary core of IFT4 (nearest chassis) to give zero reading on meter. If IFT4 is replaced, it is necessary to adjust both cores to give a zero reading at 5.5 Mc/s.

(4) Withdraw both cores from former. Screw in primary core (nearest chassis) to give a minimum reading.

(5) Screw in secondary core until meter reading rises slightly and then adjust primary core until a new minimum is obtained.

(6) Repeat adjustment of primary and secondary cores until meter reads zero.

SOUND IF AMPLIFIER (IFT5)

With the oscillator connected as in (1) above and a VTVM connected across R81, adjust both primary and secondary cores in IFT5 for maximum response (Negative). This adjustment may be carried out using an "air" signal substituting for the oscillator.

RATIO DETECTOR TRANSFORMER (IFT6)

With the oscillator connected as above, adjust the secondary core (nearest chassis) so that a positive or negative reading is obtained on a DC VTVM connected between the junction of the diode load resistors and earth. Adjust the primary (top of coil) so that this reading shows a maximum. Then adjust the secondary core so that this reading is zero volts. This adjustment may also be carried out using an "air" signal as previously.

PICTURE TUBE REPLACEMENT

Manufacturer	*Replacement Tube Type*
AWA	23CP4 — 23HP4.
Philips	23-CRP4.
Thomas	23HP4.

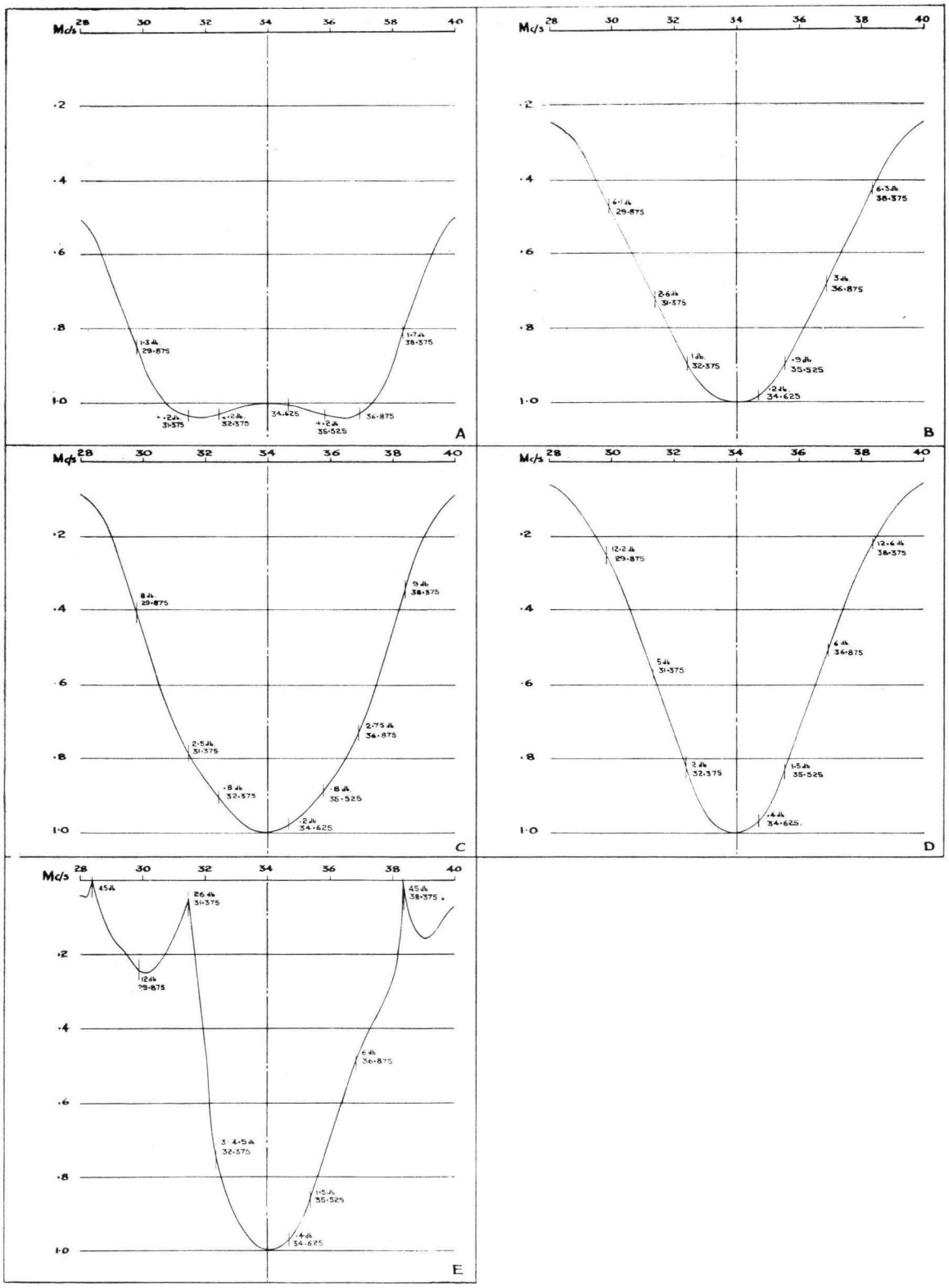
Mc/s
28
30
32
34
36
38
40
·2
·4
·6
·8
1·0
1·3 db
29·875
+·2 db
31·375
+·2 db
32·375
34·625
+·2 db
35·525
36·875
1·7 db
38·375
A
6·1 db
29·875
2·6 db
31·375
1 db
32·375
·9 db
35·525
·2 db
34·625
3 db
36·875
6·3 db
38·375
B
8 db
29·875
2·5 db
31·375
·8 db
32·375
·8 db
35·525
·2 db
34·625
2·75 db
36·875
9 db
38·375
C
12·2 db
29·875
5 db
31·375
2 db
32·375
1·5 db
35·525
·4 db
34·625
6 db
36·875
12·6 db
38·375
D
4·5 db
1·2 db
29·875
26 db
31·375
3·4·5 db
32·375
1·5 db
35·525
·4 db
34·625
6 db
36·875
45 db
38·375
E

FIG. 5.

PARTS LIST - - MODELS PM, PP

RESISTORS

REF.	PART NO.	DESCRIPTION
R21	740-0412	820 ohms ± 10% ½ W.
R22	740-0032	2.2K ohms ± 10% ½ W.
R23	740-0482	56 ohms ± 10% ½ W.
R24	740-0653	100 ohms ± 10% ½ W. Morganite
R24a	742-0712	2.2K ohms ± 20% 1 W.
R25	740-0702	56K ohms ± 10% ½ W.
R26	740-0322	1.2K ohms ± 10% ½ W.
R27	740-0273	150 ohms ± 10% ½ W. Morganite
R28	742-0712	2.2K ohms ± 20% 1 W.
R28a	740-0062	3.9K ohms ± 10% ½ W.
R29	740-0012	470 ohms ± 10% ½ W.
R30	740-0273	150 ohms ± 10% ½ W. Morganite
R31	749-0342	1.5K ohms ± 10% 2 W.
R32	740-0292	270 ohms ± 10% ½ W.
R33a	740-0043	2.7K ohms ± 10% ½ W.
R33b	742-0992	300K ohms ± 5% 1 W.
R34	740-0062	3.9K ohms ± 10% ½ W.
R35	740-0242	33K ohms ± 10% ½ W.
R36	740-0043	2.7K ohms ± 10% ½ W. Morganite
R37	740-0022	1K ohm ± 10% ½ W.
R38	750-0472	3.6K ohms ± 5% 4 W. Metox
R39	740-0653	100 ohms ± 10% ½ W. Morganite
R40	740-0622	470K ohms ± 20% ½ W.
R41	740-0732	12K ohms ± 10% ½ W.
R42	740-0142	100K ohms ± 10% ½ W.
R43	742-0162	390K ohms ± 10% 1 W.
R44	740-0122	47K ohms ± 10% ½ W.
R45		
R46	750-0291	250 ohms ± 5% 5 W. Cemcoat
R47	749-0142	1K ohm ± 20% 2 W.
R48	740-0252	12K ohms ± 10% ½ W.
R49	740-0112	27K ohms ± 10% ½ W.
R50	740-0142	100K ohms ± 10% ½ W.
R51	740-0162	220K ohms ± 10% ½ W.
R52	740-0162	220K ohms ± 10% ½ W.
R53	740-0242	33K ohms ± 10% ½ W.
R54	740-0162	220K ohms ± 10% ½ W.
R55	740-0822	33K ohms ± 20% ½ W.
R56	740-0122	47K ohms ± 10% ½ W.
R57	740-0112	27K ohms ± 10% ½ W.
R58	742-0772	3.9M ohms ± 10% 1 W.
R59	740-0202	2.2M ohms ± 10% ½ W.
R60	742-0122	150K ohms ± 10% 1 W.
R61	749-0232	27K ohms ± 10% 2 W.
R62		
R63	742-0172	470K ohms ± 10% 1 W.
R64	742-0772	3.9M ohms ± 10% 1 W.
R65	742-0772	3.9M ohms ± 10% 1 W.
R66	742-0892	2.2M ohms ± 10% 1 W.
R67	742-0192	1M ohm ± 10% 1 W.
R68	740-0502	15K ohms ± 20% ½ W.
R69	740-0782	120K ohms ± 10% ½ W.
R70	740-0702	56K ohms ± 10% ½ W.
R71	740-0782	120K ohms ± 10% ½ W.
R72	749-0182	22K ohms ± 10% 2 W.
R73	740-0252	1.5K ohms ± 10% ½ W.
R74	740-0082	10K ohms ± 10% ½ W.
R75	740-0112	27K ohms ± 10% ½ W.
R76	740-0242	33K ohms ± 10% ½ W.
R77	740-0273	150 ohms ± 10% ½ W. Morganite
R78	740-0572	1K ohm ± 20% ½ W.
R79	740-0142	100K ohms ± 10% ½ W.
R80	740-0242	33K ohms ± 10% ½ W.
R81	740-0082	10K ohms ± 10% ½ W.
R82	742-0092	47K ohms ± 10% 1 W.
R83	740-0022	1K ohm ± 10% ½ W.
R84	740-0062	3.9K ohms ± 10% ½ W.
R85	740-0112	27K ohms ± 10% ½ W.
R86	740-0112	27K ohms ± 10% ½ W.
R87	740-0122	47K ohms ± 10% ½ W.
R88	740-0082	10K ohms ± 10% ½ W.
R89	740-0082	10K ohms ± 10% ½ W.
R90	740-0152	150K ohms ± 10% ½ W.
R91	740-0152	150K ohms ± 10% ½ W.
R92	740-0702	56K ohms ± 10% ½ W.
R93	740-0092	15K ohms ± 10% ½ W.
R94	742-0132	220K ohms ± 10% 1 W.
R95	740-0052	3.3K ohms ± 10% ½ W.
R96	740-0292	270 ohms ± 10% ½ W.
R97	740-1052	330K ohms ± 20% ½ W.
R98	740-1062	680K ohms ± 20% ½ W.
R99	740-0052	3.3K ohms ± 10% ½ W.
R100	750-0532	470 ohms ± 10% 5 W. PW5
R101	740-0663	82 ohms ± 10% ½ W. Morganite
R102	742-0112	100K ohms ± 10% 1 W.
R103	740-0112	27K ohms ± 10% ½ W.
R104	740-0082	10K ohms ± 10% ½ W.
R105	740-0082	10K ohms ± 10% ½ W.
R106	740-0122	47K ohms ± 10% ½ W.
R107	740-0082	10K ohms ± 10% ½ W.
R108	742-0172	470K ohms ± 10% 1 W.
R109	740-0082	10K ohms ± 10% ½ W.
R110	740-0232	39K ohms ± 10% ½ W.
R111	742-0022	4.7K ohms ± 10% 1 W.
R112	740-0202	2.2M ohms ± 10% ½ W.
R113	740-0582	47K ohms ± 20% ½ W.
R114	740-0302	1.8K ohms ± 10% ½ W.
R115	750-0482	1K ohm ± 5% 4 W. Metox
R116	742-0823	270 ohms ± 10% 1 W. Morganite
R117	740-1043	27 ohms ± 10% ½ W. Morganite
R118	740-1043	27 ohms ± 10% ½ W. Morganite
R119	740-0172	270K ohms ± 10% ½ W.
R120	740-0392	330K ohms ± 10% ½ W.
R121	740-0043	2.7K ohms ± 10% ½ W. Morganite
R122	740-0182	470K ohms ± 10% ½ W.
R123	740-0142	100K ohms ± 10% ½ W.
R124	740-0102	22K ohms ± 10% ½ W.
R125	742-0042	15K ohms ± 10% 1 W.
R126	742-0472	1.8K ohms ± 10% 1 W.
R127	740-0702	56K ohms ± 10% ½ W.
R128	740-0112	27K ohms ± 10% ½ W.
R129	742-0092	47K ohms ± 10% 1 W.
R130	742-0172	470K ohms ± 10% 1 W.
R131	740-0572	1K ohm ± 20% ½ W.
R132	750-0362	2.7K ohms ± 10% 5 W. PW5
R133	746-0242	1 ohm ± 10% BW ½ W/W
R134	742-0262	2.7K ohms ± 10% 1 W.
R135	Part of 908-0382	1.5 ohms Wire Resistor
R136	742-0492	68K ohms ± 10% 1 W.
R137	742-0112	100K ohms ± 10% 1 W.
R138	742-0772	3.9M ohms ± 10% 1 W.

CAPACITORS

REF.	PART NO.	DESCRIPTION
C20	271-0941	8.2 pF ± ½ pF NPO Disc
C21	273-0591	68 pF ± 2½% M.S. Mica
C22	271-0911	.003 uF 500V. Ceramic
C23	271-0911	.003 uF 500V. Ceramic
C24	271-0621	.001 uF lead thru Ducon CAC 100
C25	271-0911	.003 uF 500V. Ceramic
C26	271-0731	.047 uF + 80% — 20% Disc 'B' Red Cap
C27	271-0281	.022 uF + 100% — 0% 100V. Ceramic Disc
C28	271-0591	.0027 uF ± 20% K2000 Style Ceramic Disc
C29	273-0591	68 pF ± 2½% Mica
C30	271-0911	.003 uF 500V. Ceramic
C31	271-0731	.047 uF + 80% — 20% Disc 'B' Red Cap
C32	271-0591	.0027 uF ± 20% K2000 Style Ceramic Disc
C33	273-0591	68 pF ± 2½% Mica
C34	271-0911	.003 uF 500V. Ceramic
C35	271-1021	.001 uF + 100% — 20% Type AZ Ceramic Disc
C36	271-0911	.003 uF 500V. Ceramic
C37	271-0591	.0027 uF ± 20% K2000 Style Ceramic Disc
C38	271-0621	1000 pF Feed thru Ducon CAC100
C39	271-0121	5.6 pF ± ¼ pF Ceramic Tube NPO
C40	271-0131	8.2 pF ± ¼ pF Ceramic Tube NPO
C41	271-0181	15 pF ± ½ pF Ceramic Tube NPO
C42	271-0691	3.9 pF ± ¼ pF Ceramic Disc NPO
C43	271-0311	27 pF ± 5% Ceramic Tube NPO
C44	283-1701	.047 uF ± 10% 400V. Polyester
C45	282-0541	.0022 uF ± 10% 400V. Polyester
C46	282-0661	.022 uF ± 10% 400V. Polyester
C47	269-0211	8 uF 300 V.W. Electro Type ET2D
C48	269-0521	100 uF 150 V.W. Insulated Electro Type EMG1014 SFE
C49	269-0521	100 uF 150 V.W. Insulated Electro Type EMG1014 SFE
C50) C51)	269-0901	(60 uF + 275 VW Electro EMG 8275 (200 uF
C52	271-0911	.003 uF 500V. Ceramic
C53	271-0911	.003 uF 500V. Ceramic
C54	283-1661	.022 uF ± 10% 400V. Polyester
C55	269-0611	4 uF 300 V.W. Electro Type ET2D
C56	280-1791	220 pF ± 10% 600V. Styroseal
C57	273-0921	68 pF ± 10% MS Mica
C58	283-1741	.1 uF ± 10% 400V. Polyester
C59	283-1281	.22 uF ± 10% 125V. Polyester
C60	271-1021	.001 uF + 100% — 20% Type AZ Ceramic Disc

PARTS LIST - - MODELS PM, PP

CAPACITORS—*continued*

REF.	PART NO.	DESCRIPTION
C61	283-2361	1 uF ± 20% 125V. Polyester
C62	271-0231	68 pF ± 10% 3K V.W. N750 Ceramic Disc
C63	283-1281	.22 uF ± 10% 125V. Polyester
C64	271-0701	1 pF ± ¼ pF Ceramic Bead NPO
C65	282-0541	.0022 uF ± 10% 400V. Poyester
C66	282-0541	.0022 uF ± 10% 400V. Poyester
C67	271-0731	.047 uF + 80% — 20% Disc 'B' Red Cap
C68	283-1621	.01 uF ± 10% 400V. Polyester
C69	271-0681	12 pF ± 5% Ceramic Disc NPO
C70	271-0471	6.8 pF ± ¼ pF Ceramic Disc NPO
C71	271-0681	12 pF ± 5% Ceramic Disc NPO
C72	271-0591	.0027 uF ± 20% K20000 Style Ceramic Disc
C73	271-0591	.0027 uF ± 20% K20000 Style Ceramic Disc
C74	271-0801	10 pF ± 5% Ceramic Disc NPO
C75	271-1021	.001 uF + 100% — 20% Type AZ Ceramic Disc
C76	271-0771	100 pF ± 5% Ceramic Disc NPO
C77	280-1501	100 pF ± 5% 600V. Styroseal
C78	280-1501	100 pF ± 5% 600V. Styroseal
C79	282-0501	.001 uF ± 10% 400V. Polyester
C80	269-0781	4 uF 25 V.W. Electro Type ET1X
C81	282-0581	.0047 uF ± 10% 400V. Polyester
C82	280-1841	560 pF ± 10% 600V. Styroseal
C83	283-1121	.01 uF ± 10% 125V. Polyester
C84	269-0611	4 uF 300 V.W. Electro Type ET2D
C85	269-0701	10 uF 12 V.W. Electro Type ES1203
C86	283-1641	.015 uF ± 10% 400V. Polyester
C87	271-0181	15 pF ± ½ pF Ceramic Tube NPO
C88	269-0061	16 uF 300 V.W. Electro Type ET4D
C89	269-0221	25 uF 25 V.W. Electro Type ET1B
C90	283-1661	.022 uF ± 10% 400V. Polyester
C91	282-0541	.0022 uF ± 10% 400V. Polyester
C92	283-2361	1 uF ± 20% 125V. Polyester
C93	283-1701	.047 uF ± 10% 400V Polyester
C94	282-0541	.0022 uF ± 10% 400V. Polyester
C95	282-0541	.0022 uF ± 10% 400V. Polyester
C96	282-0721	.068 uF ± 10% 400V. Polyester
C97	Part of 269-0981	50 uF 300V. Electro with C100 and C101
C98	283-1621	.01 uF ± 10% 400V. Polyester
C99	283-1281	.22 uF ± 10% 125V. Polyester
C100	part of	24 uF 300V. Electro
C101	269-0981	100 uF 25V. Electro with C97
C102	271-1081	82 pF ± 5% N330 Ceramic Tube
C103	271-0951	47 pF ± 10% CTR Ceramic
C104	282-0521	.0015 uF ± 10% 400V. Polyester
C105	282-0501	.001 uF ± 10% 400V. Polyester
C106	282-0581	.0047 uF ± 10% 400V. Polyester
C107	280-1751	100 pF ± 10% 600V. Styroseal
C108	283-1321	.47 uF ± 10% 125V. Polyester
C109	282-0561	.0033 uF ± 10% 400V. Polyester
C110	280-1851	680 pF ± 10% 600V. Styroseal
C111	271-0481	82 pF ± 5% Ceramic Tube NPO
C112	280-1781	180 pF ± 10% 600V. Styroseal
C113	283-1581	.0047 uF ± 10% 400V. Polyester
C114	Part of 908-0383	82 pF Ceramic Tube
C115	284-0661	.022 ± 20% 600V. Polyester
C116	Part of 908-0383	150 pF Ceramic Tube
C117	284-1281	.22 uF ± 20% 1000V. Polyester
C118	284-1281	.22 uF ± 20% 1000V. Polyester
C119	284-2701	.047 uF ± 10% 1000V. Polyester
C120	283-1781	.22 uF ± 10% 400V. Polyester

COILS

REF.	PART NO.	DESCRIPTION
L21, L22	259-1182	1st I.F. Grid Coil and 31.375 Mc/s. Trap
L23, L24	259-1172	1st I.F. Anode Coil and 29.875 Mc/s. Trap
L26, L27	259-1321	2nd I.F. Anode Coil and 38.375 Mc/s. Trap
L28		
L29		
L30	259-1341	Detector Input Coil
L31	259-0955	Grid Peaking Choke
L32	259-0955	Grid Peaking Choke
L33	259-1083	Peaking Coil—Shunt
L34	259-1093	Peaking Coil—Series
L35	259-1361	Horizontal Stabiliser Coil
L36	259-0045	Anti-Parasitic Coil
L37	259-0904	Width Coil
L38	259-0045	Anti-Parasitic Coil
L39	259-0045	Anti-Parasitic Coil
L40	259-0924	Horizontal Linearity Coil

POTENTIOMETERS

REF.	PART NO.	DESCRIPTION
RV1	677-1102	500K ohms Curve 'A'—Brightness
RV2	677-0171	25K ohms Curve 'A' Type E.C.—Noise Inverter
RV3	677-0911	1M ohm Curve 'A' Type E.C.—AGC
RV4	677-1151	25K ohms Curve 'A'—Picture Contrast
RV5		50K ohms Curve 'A'—Cont. Range
RV6	677-1113	1M ohm 'Reverse C' Curve—Tone
RV7	677-1091	1M ohm Curve 'A' Tapped 500K ohms—Volume
RV8	677-0921	50K ohms Curve 'A' Type E.C.—Height
RV9	677-1102	500K ohms Curve 'A' I.R.C.—Vertical Hold
RV10	677-0511	10K ohms Curve 'A' Type E.C.—Vertical Linearity
RV11	677-0921	50K ohms Curve 'A' Type E.C.—Horizontal Hold
RV12	677-0891	2M ohms ± 20%—Focus

TRANSFORMERS

REF.	PART NO.	DESCRIPTION
IFT1	906-0591	Vision IFT
IFT2	906-0601	Vision IFT
IFT3	906-0611	Vision IFT
IFT4	906-0263	Sound take-off and 5.5 Mc/s Trap
IFT5	906-0382	Sound IFT
IFT6	906-0324	Ratio Detector
T1	904-0412	Mains Transformer
T2	905-0462	Audio Output Transformer
T3	908-0662	Blocking Oscillator Transformer
T4	905-0531	Vertical Output Transformer
T5	908-0671	Vertical Feedback Transformer
T6	908-0383	Horizontal Output Transformer Philips AT2016T/93 or NT3101
T7	908-0692	Focus Transformer

PARTS LIST - - MODELS PM, PP

VALVES

REF.	PART NO.	DESCRIPTION
V1	932-1161	6ES8—R.F. Amplifier
V2	932-1921	6HG8—Frequency Changer
V3	932-0881	6BY7—1st I.F. Amplifier
V4	932-1221	6EJ7—2nd I.F. Amplifier
V5	932-1221	6EJ7—3rd I.F. Amplifier
V6	932-1081	6DX8—Video Amplifier and Noise Inverter
V7	932-1091	6CS6—Sync. Separator
V8	932-1101	6U8—Sound I.F. Amplifier and AGC
V9	932-0441	6AU6—Limiter
V10	932-1771	6GW8—Audio Driver and Audio Output
V11	932-0511	6BM8—Blocking Oscillator and Vertical Output
V12	932-4811	12AU7—Horizontal Multivibrator
V13	932-0531	6CM5—Horizontal Output
V14	932-0771	1S2—E.H.T. Rectifier
V15	932-1151	6AL3—Damping Diode
	932-1171	Lamp. 6.3V., .32A.

DIODES

REF.	PART NO.	DESCRIPTION
MR1	932-0971	0A90
MR2	932-1071)	0A210, 1N1763 or 1N2094
MR3	932-1071)	
MR4	932-0991	M3
MR5 } MR6 }	932-2081	2 — AA119 Matched Pair
MR7	932-2031	0A91
MR8	932-2031	0A91

MISCELLANEOUS

REF.	PART NO.	DESCRIPTION
CH1	232-0321	HT Choke
RT1	752-0061	Thermistor CZ11
VDR1	750-0281	Voltage Dependent Resistor Type E298GD/A260 (Blue Spot)
FS1	431-0081	Fuse, 1.5A (Mains)
FS2	431-0081	Fuse, 1.5A (Mains)
FS3	431-0081	Fuse, 1.5A (HT)
FS4	431-0031	Fuse, 250 mA (HT2)
Tuner	224-1512	Tuner—Philips NT3011
Yoke	259-1051	Philips AT1009T/93 or AT1009T/96
SA	855-0601	D.P. Push-Push, Mains On/Off Switch ,
	824-1021	Lamp Socket 733—3—7
	160-0151	Tuner Mounting Bush
	220-0001	Pointer Drive Chain
	224-0881	Chain Sprocket Retaining Clips
	517-2081	Knob — rear pre-sets — Tone, Brightness, Vertical Hold
	518-5051	Chain Sprocket Kit
	617-0191	3/16-inch wing-nut—top chassis fixing
	617-0211	¼-inch wing-nut—tuner bracket fixing
	617-0641	Pointer
	840-0851	Chain Tensioning Spring
CRT	932-1591	23CP4, 23CRP4, 23HP4

FOR CIRCUIT WITH MODIFIED AUDIO OUTPUT STAGE

DELETE:		
R93		15K ohms
R100		470 ohms
C84		4 uF
C88		16 uF
T2		Audio Output Transformer

ADD:		
R142	742-0302	6.8K ohms ± 20% 1 W.
C125	269-1001	60 uF 300 VW Electro Type ET5F
T2	905-0541	Audio Output Transformer

H. CLARK PTY. LTD.
PRINTERS
CAMPERDOWN, N.S.W.

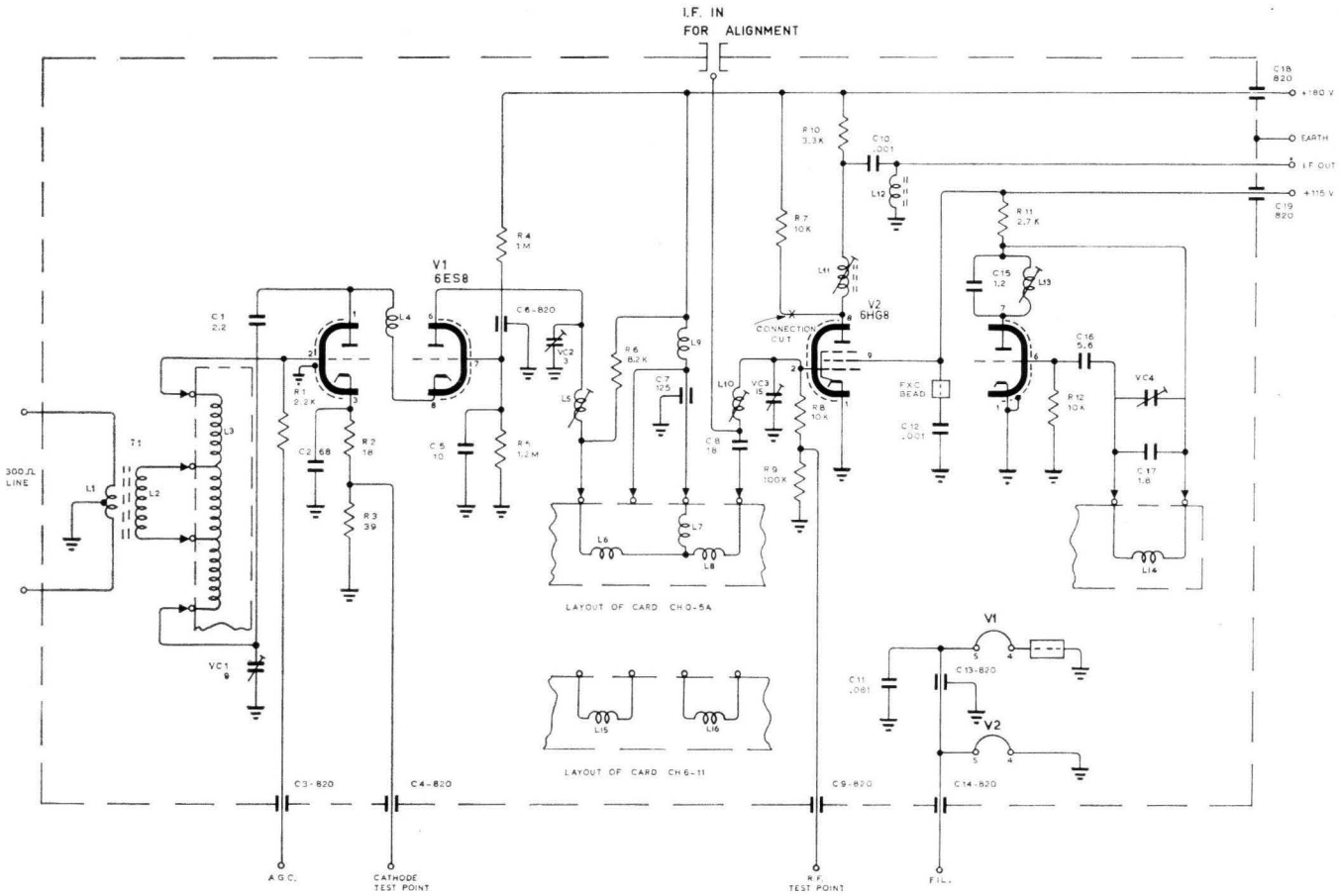

TUNER TYPE NT3011

"H.M.V" CHASSIS TYPE PM AND PP

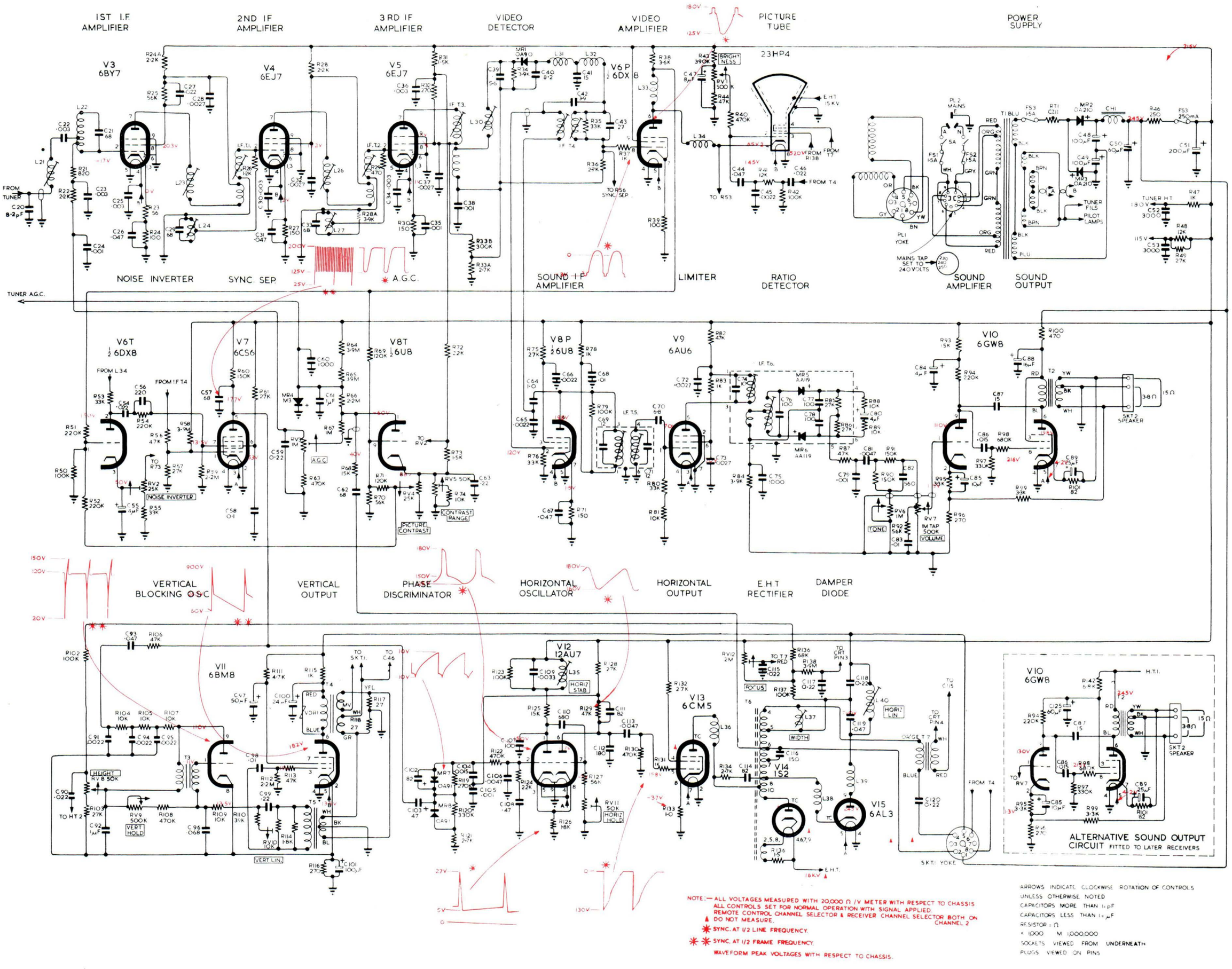

NOTE:— ALL VOLTAGES MEASURED WITH 20,000 Ω /V METER WITH RESPECT TO CHASSIS
ALL CONTROLS SET FOR NORMAL OPERATION WITH SIGNAL APPLIED.
REMOTE CONTROL CHANNEL SELECTOR & RECEIVER CHANNEL SELECTOR BOTH ON CHANNEL 2
▲ DO NOT MEASURE.
✱ SYNC. AT 1/2 LINE FREQUENCY.
✱✱ SYNC. AT 1/2 FRAME FREQUENCY.
WAVEFORM PEAK VOLTAGES WITH RESPECT TO CHASSIS.

ARROWS INDICATE CLOCKWISE ROTATION OF CONTROLS
UNLESS OTHERWISE NOTED
CAPACITORS MORE THAN 1 pF
CAPACITORS LESS THAN 1 μF
RESISTOR = Ω
K 1000 M 1,000,000
SOCKETS VIEWED FROM UNDERNEATH
PLUGS VIEWED ON PINS

683-3731