HG-700 SCHEMATIC DIAGRAM

NATIONAL MODEL. HG-700 N89.

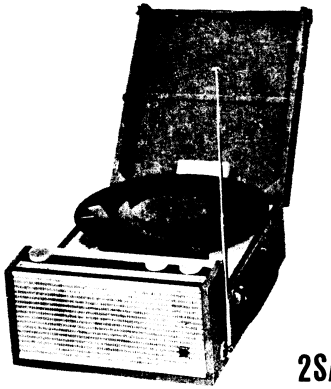

2SA103CA 0A70Y 2SA103CA 2SA102BA UA70X 2SB173B 2SB175B 2SB172A×2

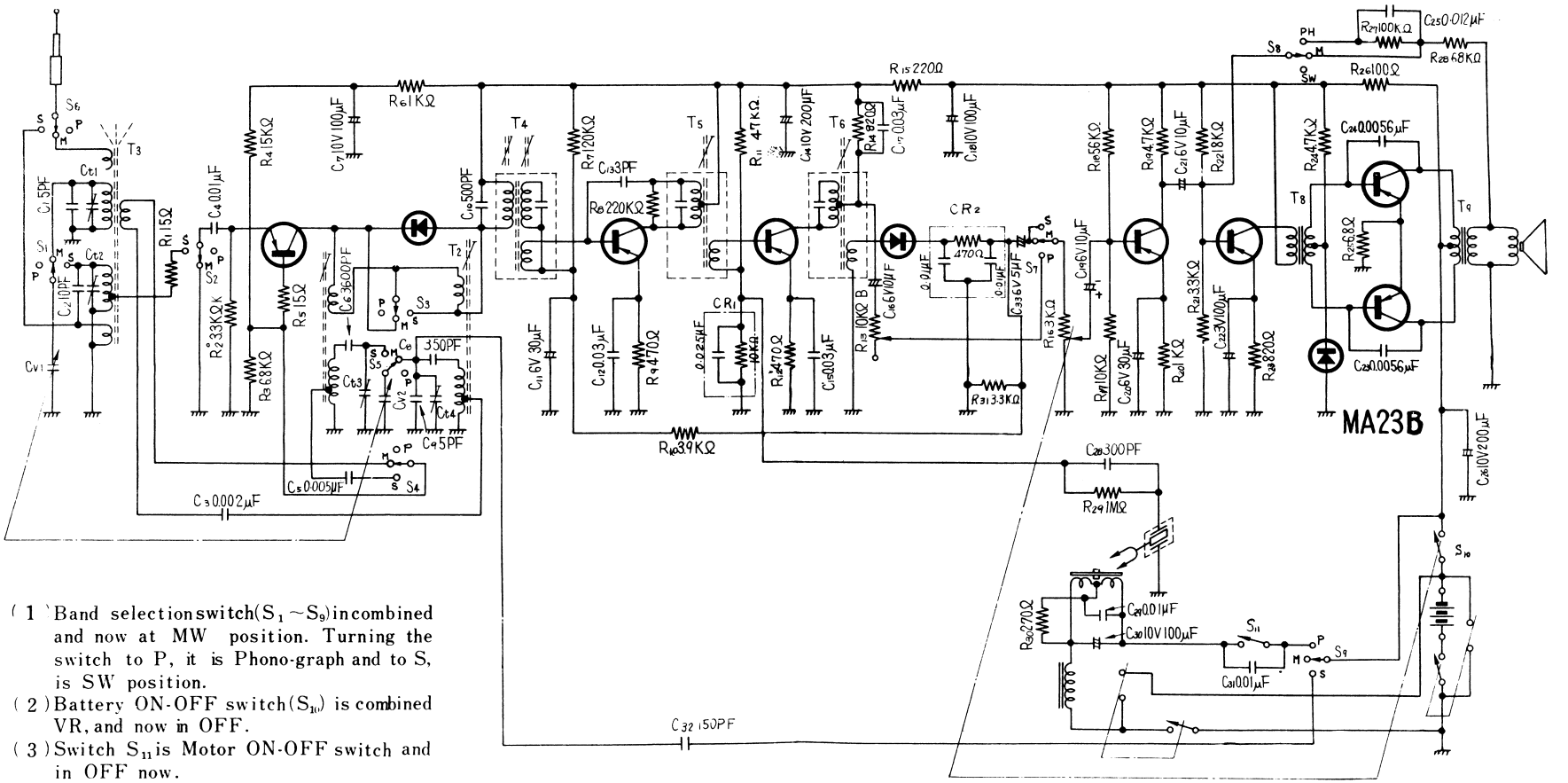

(1) Band selection switch (S_1 ~ S_9) in combined and now at MW position. Turning the switch to P, it is Phono-graph and to S, is SW position.

(2) Battery ON-OFF switch (S_{10}) is combined VR, and now in OFF.

(3) Switch S_{11} is Motor ON-OFF switch and in OFF now.

HG-700 PRINTED PATTERN DIAGRAM

NATIONAL MODEL. HG-700
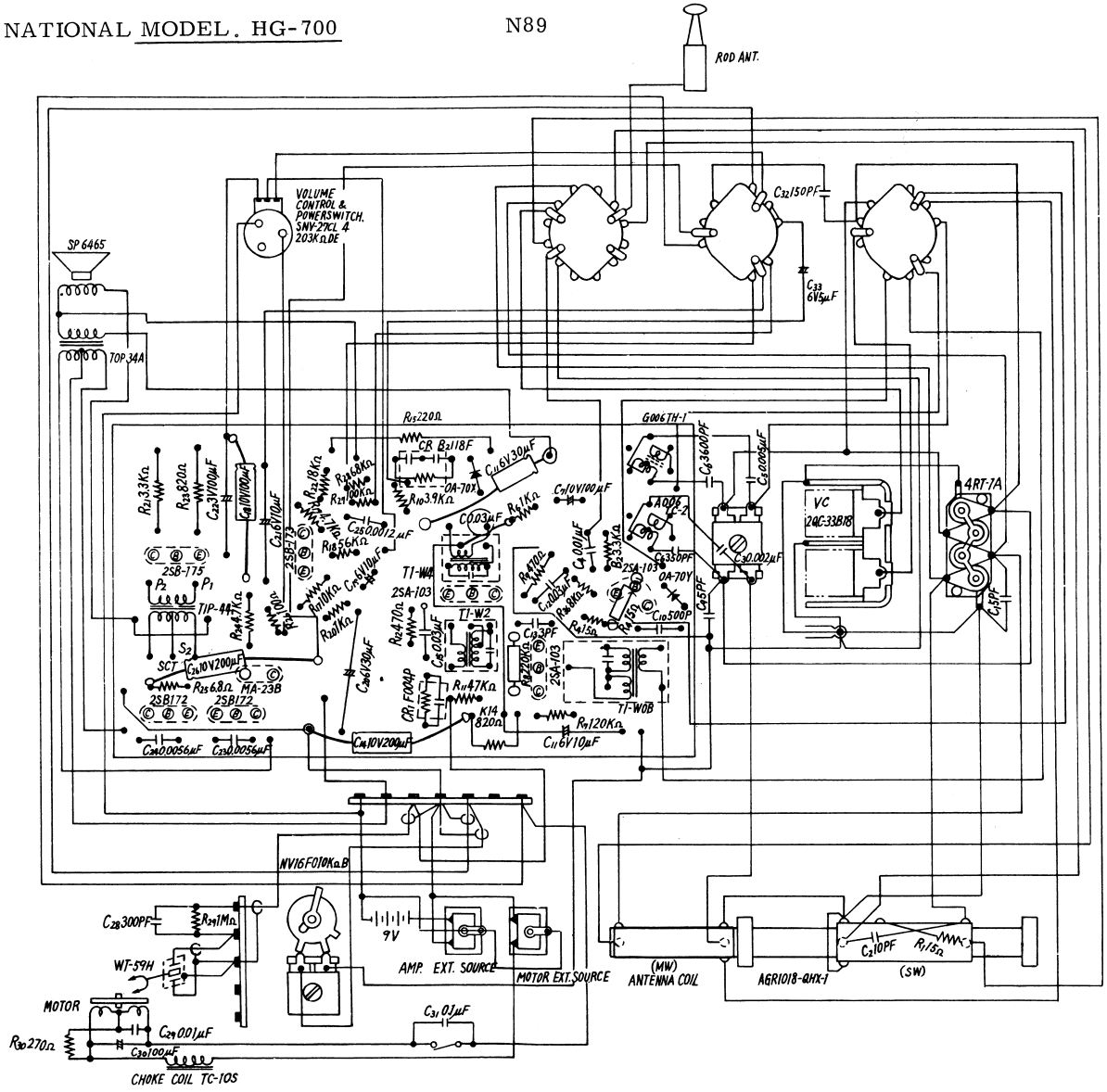
N89