# MITSUBISHI CAR AUDIO

# SERVICE MANUAL

# CASSETTE CAR STEREO

# MODEL:GX-102EM

## SPECIFICATION

| | |
|---|---|
| · Power source voltage: | DC 13.2±2.4V negative ground |
| · Current consumption: | Average 0.7A (output about 1W) |
| · Output: | 6W x 2 (Max.) 4W x 2 (TND 10%) |
| · S/N: | 45 dB |
| · Frequency characteristic: | 50 ~ 10,000Hz |
| · Wow and flutter: | 0.25% (WRMS) |
| · Tape speed: | 4.76 cm/sec. |
| · Output impedance: | 4Ω |
| · Outside dimensions: | 140(w) x 46(H) x 188(D) mm |
| · Weight- | 1.4 kg |

## CONSTRUCTION

| | GX - 102EM |
|---|---|
| Main body | 0 |
| Escutcheon | 702 L04101 |
| Brancket body | 591M30901 |
| Perforated panel | 590M75501 |
| Written warranty | 857 L045-1 |
| Instruction manual | 871 L138-3 |
| Nuts | 891M09401 |
| Junction lead | 242M143-1 |

## FEATURES

- Employed a double detecting system for automatic reverse contol.
- Simple operation by employing a lock mechanism for fast forward (FF) and rewind (REW).
- Capable of enjoying desirable sound with a bass to control a low-pitched tone and a treble to control a high-pitched tone.
- Capable of regenerating chromium tape by employing a permalloy head being high hardness and superior to wear resistance.
- Capable of making system up to a car component with DIN code that can pick up the output of pre-amplifier.

**MELCO SALES INC.**

**3030 East Victoria Street, Compton. California 90221**

# NEW CIRCUIT

**Newly employed audio terminal**

New system component has been completed: In the newly issued GX-102 EM, the sound output is picked up from the pre-amplifier same as the car audio component system and can be assembled with the stereo main amp (20W + 20W) as a deck.

**Characteristic**

So that even stereo can be assembled as a car audio component deck, since an aural signal is picked up directly from the least distortion factor of pre-amplifier to lessen a residual noise and assembled with a stereo amplifier, the characteristic enjoying noiseless and least distortion can be obtained.

**1. AN6250 IC**

AN6250 is an IC of the circuit for automatic reverse consisting of an originating circuit, a counter, a counter reset input circuit, and an output circuit.
In case the rotary pulse is not put in for more than a certain time, the output circuit has a function to turn ON.

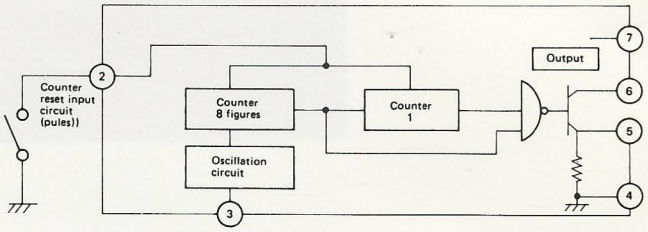


**IC Inner block diagram**

**2. Automatic reverse control circuit**

If S3 repeats ON.OFF with the wire switch (stop detecting switch) in a body with the reel (reel rest), as the counter reset pulse is feeded intermittently into IC 2 pin, IC Q702 turns ON and keeps a regeneration condition.
When ON.OFF of S3 stops, ICQ702 turns OFF and in reverse.

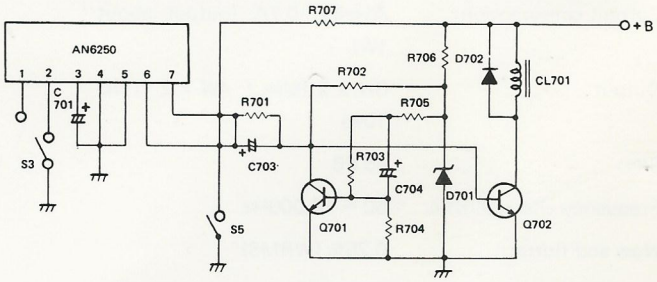


**Auto-reverse circuit**

**3. Start in same direction**

If the base bias is applied to Q701 through C704 same as the power source ON, as Q701 turns ON, the base potential of Q702 decreases to turn Q702 and also CL701 OFF, and during that time the crankgear rotates one turn. At this time, the constant is decided among the circuits R705, R704 and C704.

# DISINTEGRATION

Fig. 1

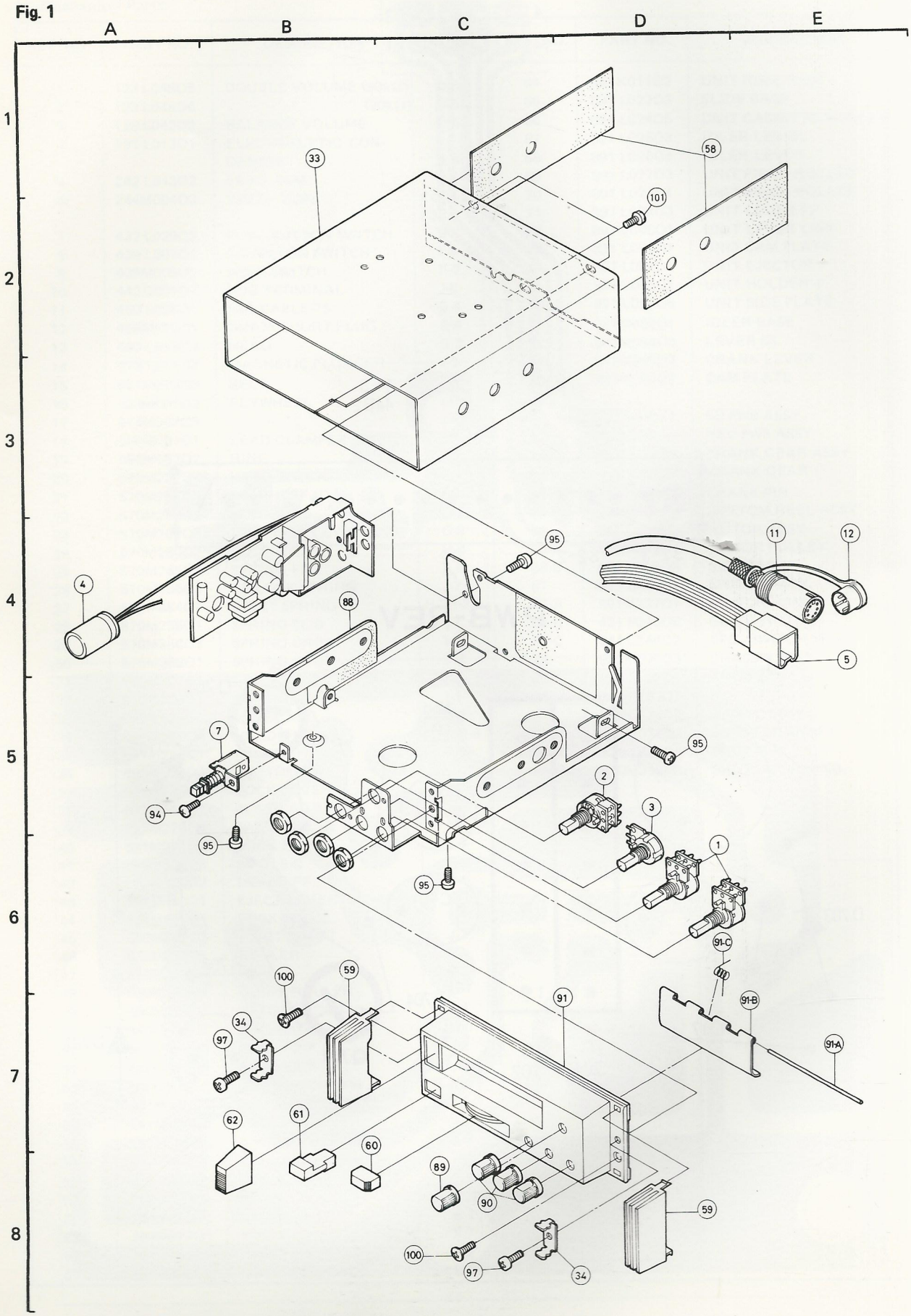

Fig. 2

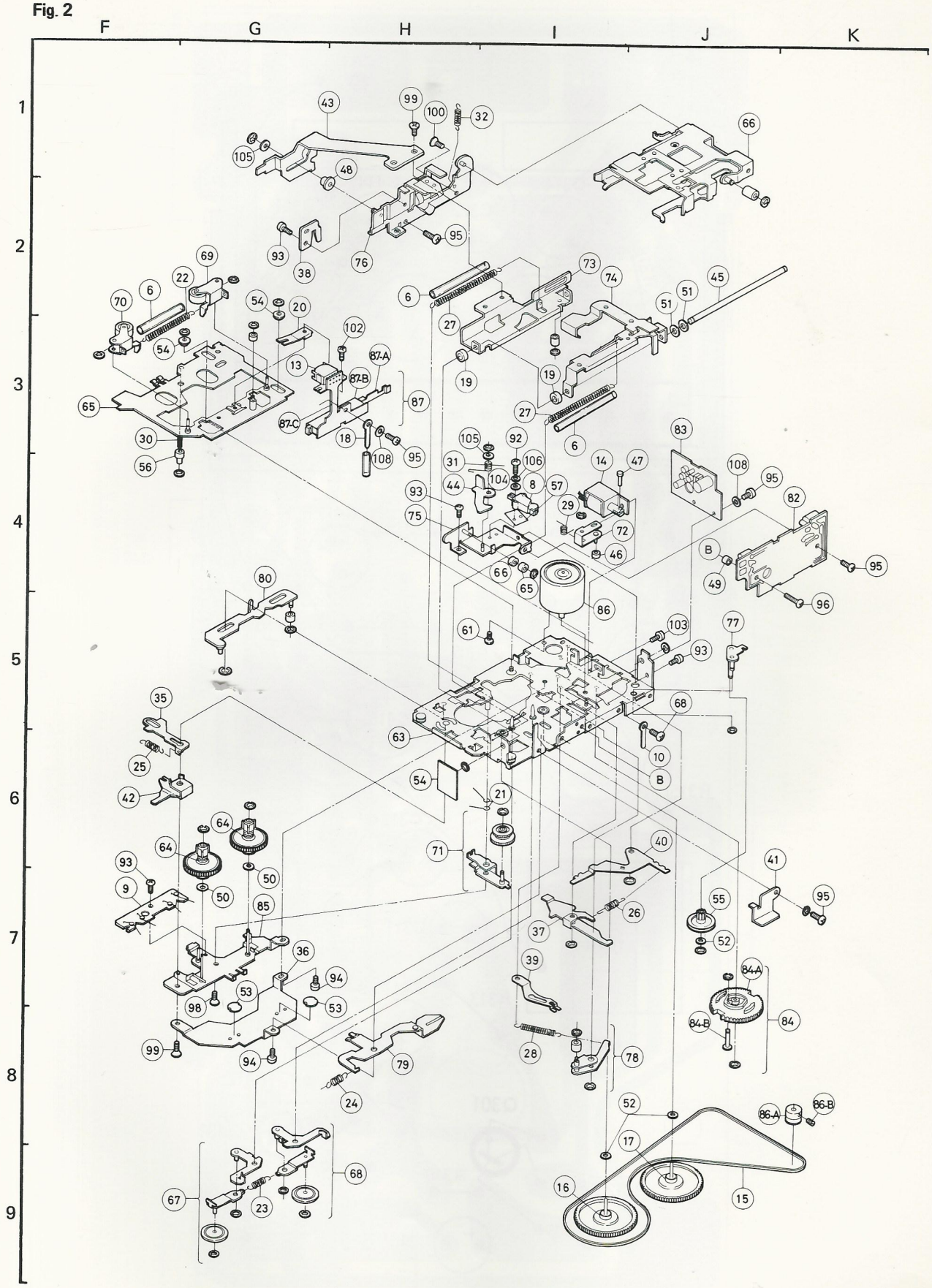
F
G
H
I
J
K
1
2
3
4
5
6
7
8
9
43
99
100
32
66
105
48
93
38
76
95
69
22
6
70
54
20
102
13
87-A
87-B
87
87-C
18
108
30
56
65
73
74
45
51
27
19
83
14
47
31
104
44
8
57
29
72
46
75
82
B
49
96
80
86
61
103
77
35
25
42
63
68
10
54
21
64
71
40
41
50
9
85
26
55
52
37
36
39
84-A
84-B
84
98
53
94
79
28
78
24
86-A
86-B
17
16
15
67
23

# PARTS LIST

## 1) Mechanical Parts

| REF. NO. | PART NO. | DESCRIPTION | INDEX |
|---|---|---|---|
| 1 | 123 L04805 | DOUBLE VOLUME (50kΩ) | D-6 |
| 2 | 123 L04806 | " (20kΩ) | D-5 |
| 3 | 129 L04202 | BALANCE VOLUME | D-5 |
| 4 | 181 L01301 | ELECTROLYTIC CON-DENSER | A-4 |
| 5 | 242 L04303 | LEAD 6CM | E-4 |
| 6 | 244M00403 | VINYL TUBE | F-2,H-2 I-3 |
| 7 | 432 L02902 | PUSH BUTTON SWITCH | B-5 |
| 8 | 439 L00101 | SQUELTON SWITCH | I-4 |
| 9 | 439M00901 | WIRE SWITCH | F-7 |
| 10 | 443 D00103 | LUG TERMINAL | J-5 |
| 11 | 450 L00801 | DIN CABLE-7S | E-4 |
| 12 | 459M01801 | DIN-7P SHORT PLUG | E-4 |
| 13 | 460 L01902 | HEAD | G-3 |
| 14 | 479 L01102 | MAGNETIC PLUNGER | J-3 |
| 15 | 521M02203 | BELT | J-9 |
| 16 | 524M00702 | FLYWHEEL | I-9 |
| 17 | 524M00703 | " | J-8 |
| 18 | 540M00101 | LEAD CLAMPER | I-3 |
| 19 | 550M06302 | RING | I-3 |
| 20 | 570M25103 | HEAD SPRING | G-2 |
| 21 | 570M25203 | SPRING-FF-ID | I-6 |
| 22 | 570M25602 | SPRING PR | G-2 |
| 23 | 570M25701 | IDLER PULLEY SPRING | G-9 |
| 24 | 570M26002 | SPRING CR-BI | H-8 |
| 25 | 570M26501 | SPRING-FF | F-6 |
| 26 | 570M26602 | FF LOCK SPRING | J-7 |
| 27 | 570M28401 | EJECT SPRING | H-2,I-3 |
| 28 | 570M25501 | SPRING SL-B | I-7 |
| 29 | 570M28603 | SPRING CR-P | I-4 |
| 30 | 570M30801 | SPRING SL-ST | F-3 |
| 31 | 570M32301 | LOCK SPRING | I-3 |
| 32 | 570M33001 | SPRING EV | I-1 |
| 33 | 590 K13903 | UNIT CASE | B-1 |
| 34 | 591M16801 | HOLDER-E | B-7, D-8 |
| 35 | 591M23501 | PLATE FF | F-5 |
| 36 | 591M23603 | BOTTOM-FW | G-7 |
| 37 | 591M23902 | LOCK LEVER | I-7 |
| 38 | 591M24501 | PLATE ADJUST | G-2 |
| 39 | 591M27002 | SWITCH RING | I-7 |
| 40 | 591M27102 | LOCK FF | J-6 |
| 41 | 591M31103 | ANGLE-C | K-6 |
| 42 | 591M33002 | LEVER FF | F-6 |
| 43 | 591M46501 | EJECT LEVER | G-1 |
| 44 | 591M49901 | LOCK CP | H-6 |
| 45 | 630M35201 | EJECT SHAFT | J-2 |
| 46 | 630M35801 | ROLLER | J-4 |
| 47 | 630M38501 | PIN-P | J-3 |
| 48 | 630M39901 | GUIDE ROLLER | H-1 |
| 49 | 630M40001 | BASE HOLDER | J-4 |
| 50 | 640M00201 | WASHER P | G-6 |
| 51 | 640M00202 | WASHER P | J-2 |
| 52 | 640M00203 | WASHER P | J-7, 8 |
| 53 | 640M03601 | BOTTOM CUP FW | G-7,H-7 |
| 54 | 641M12801 | ROLLER BA-H | G-2,F-3 |
| 55 | 641M13003 | PULLEY GEAR | J-7 |
| 56 | 641M13501 | STOPPER COLLAR | F-3 |
| 57 | 642M06202 | INSULATOR PLATE | H-4 |
| 58 | 642M09701 | INSULATOR | D-1 |
| 59 | 702M00702 | SIDE PANEL | B-7,D-8 |
| 60 | 704M27201 | FF KNOB | B-7 |
| 61 | 704M27301 | PRO KNOB | B-7 |
| 62 | 704M28401 | EJECT KNOB | B-7 |
| 63 | 891 K01006 | UNIT MAIN BASE | H-5 |
| 64 | 891 K01102 | UNIT REEL REST | G-6 |
| 65 | 891 L02203 | SLIDE BASE | F-3 |
| 66 | 891 L02405 | UNIT CASSETTE HOLDER | J-1 |
| 67 | 891 L02603 | IDLER LEVER | G-9 |
| 68 | 891 L02604 | IDLER LEVER | H-9 |
| 69 | 891 L02703 | UNIT PINCH ROLLER | G-2 |
| 70 | 891 L02704 | UNIT PINCH ROLLER | F-2 |
| 71 | 891 L03403 | UNIT LEVER FF | I-6 |
| 72 | 891 L04501 | UNIT LEVER LINK | J-4 |
| 73 | 891 L05301 | UNIT CAM PLATE | I-2 |
| 74 | 891 L05401 | UNIT EJECTOR | I-2 |
| 75 | 891 L05501 | UNIT HOLDER-P | H-4 |
| 76 | 891 L05906 | UNIT SIDE PLATE | H-2 |
| 77 | 891M05201 | IDLER BASE | J-4 |
| 78 | 891M05403 | LEVER SS | J-7 |
| 79 | 891M05502 | CRANK LEVER | H-8 |
| 80 | 891M06301 | CAM PLATE | G-4 |
| 81 | | | |
| 82 | 923 L49601 | EQ PWB ASSY | K-4 |
| 83 | 923 L49901 | REV PWB ASSY | J-3 |
| 84 | 943 L42701 | CRANK GEAR ASSY | J-7 |
| 84-A | 641 L01903 | CRANK GEAR | J-7 |
| 84-B | 630 M36001 | CRANK PIN | J-7 |
| 85 | 943 L42801 | BOTTOM REEL ASSY | G-7 |
| 86 | 943 L42902 | MOTOR ASSY | J-4 |
| 86-A | 522M03301 | MOTOR PULLEY | K-8 |
| 86-B | 669 D05808 | SETSCREW | K-8 |
| 87 | 943 L48701 | SWITCH ASSY | H-3 |
| 87-A | 591M23701 | SWITCH ARM | H-3 |
| 87-B | 431 P01305 | SLIDE SWITCH | H-3 |
| 87-C | 241 L34402 | EPC - SWITCH HEAD | G-3 |
| 88 | 943M07003 | CHASSIS ASSY | B-4 |
| 89 | 963 L11101 | KNOB ASSY | C-7 |
| 90 | 963 L13301 | " | C-7 |
| 91 | 963 L13503 | PANEL ASSY | C-6 |
| 91-A | 531M07203 | SHUTTER SHAFT | E-7 |
| 91-B | 768 L02404 | SHUTTER | D-6 |
| 91-C | 570M302Q2 | SHUTTER SPRING | D-6 |

# PWB-PRINTED-R

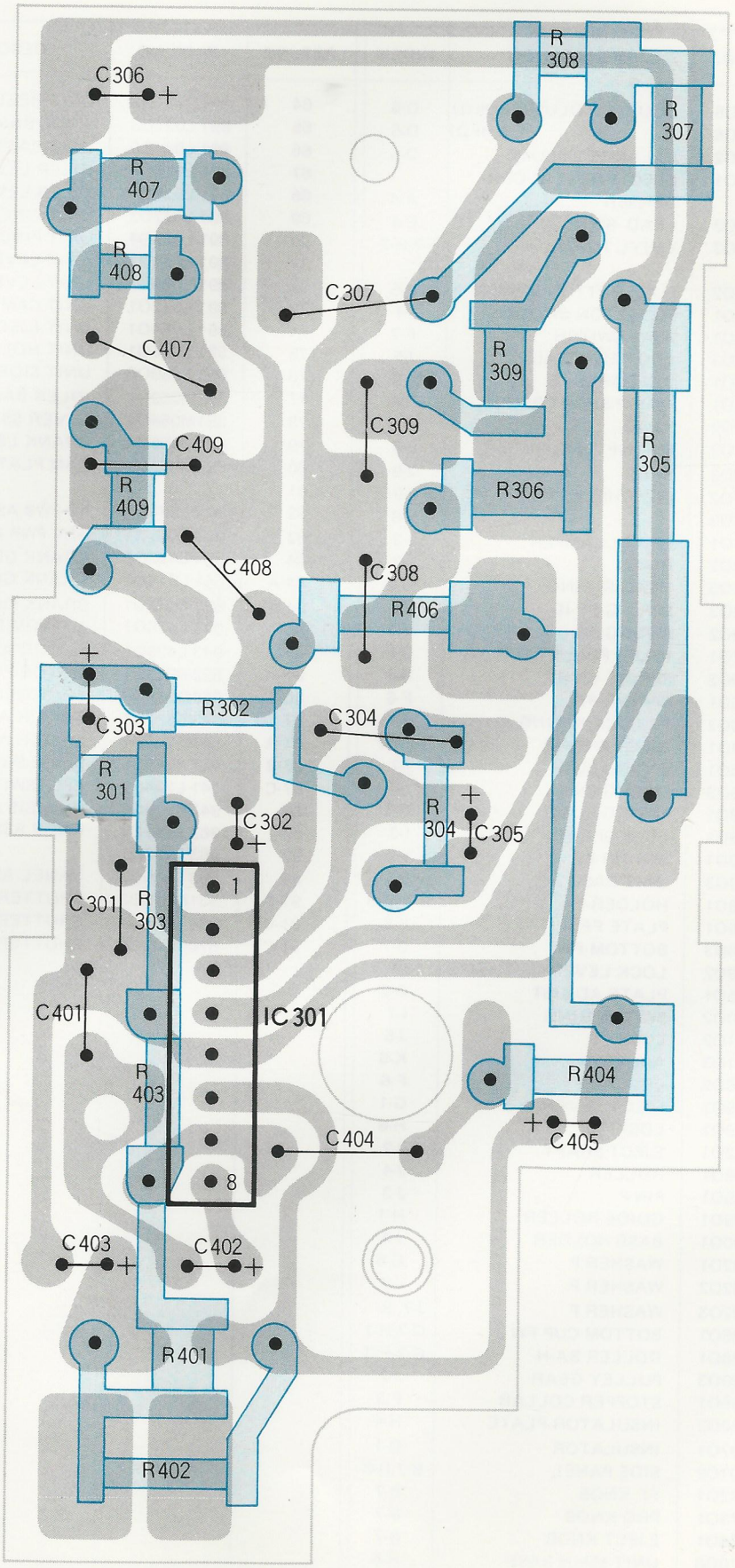

# AF-POWER

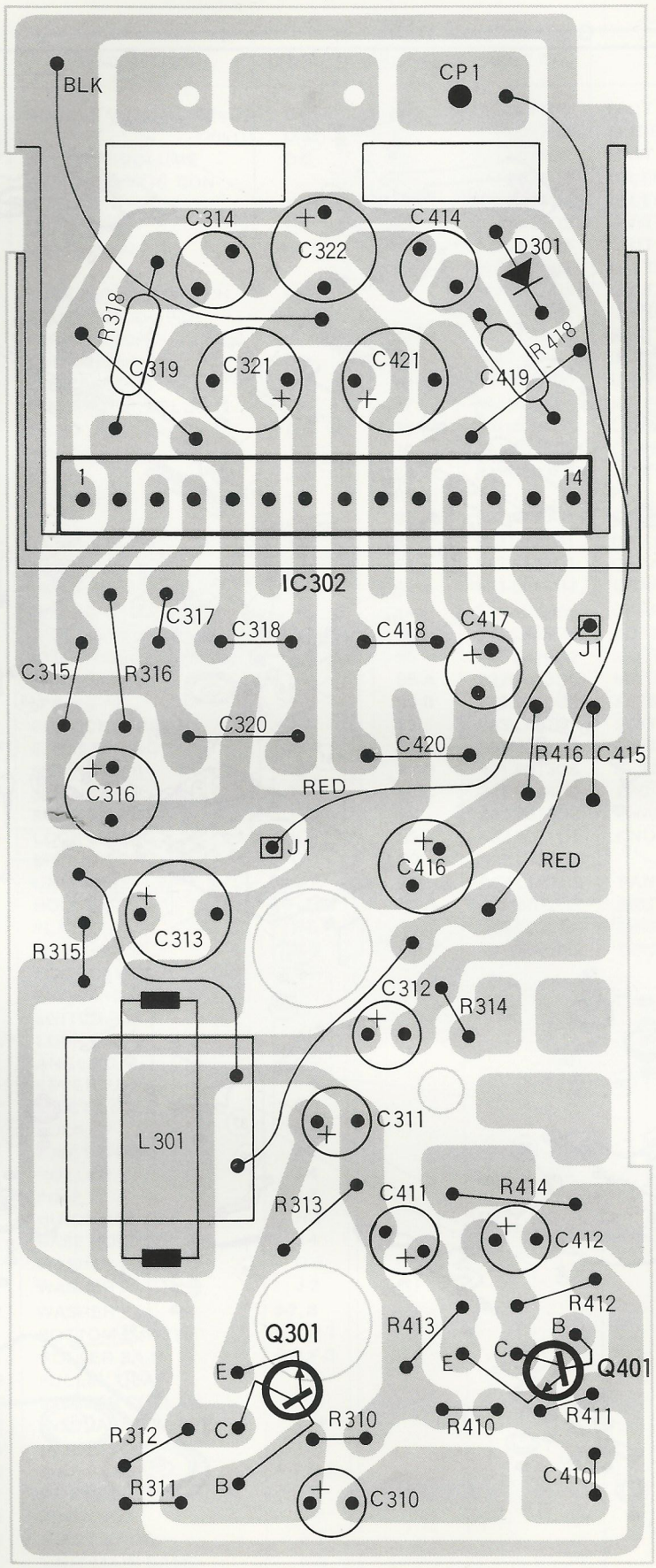
BLK
CP1
C314
C322
C414
D301
R318
C319
C321
C421
R418
C419
1
14
IC302
C317
C318
C418
C417
J1
C315
R316
C320
C420
R416
C415
C316
RED
J1
C416
RED
C313
R315
C312
R314
L301
C311
R313
C411
R414
C412
R412
Q301
R413
B
C
E
Q401
E
C
R312
R310
R410
R411
R311
B
C310
C410

## FPC-SW-HEAD

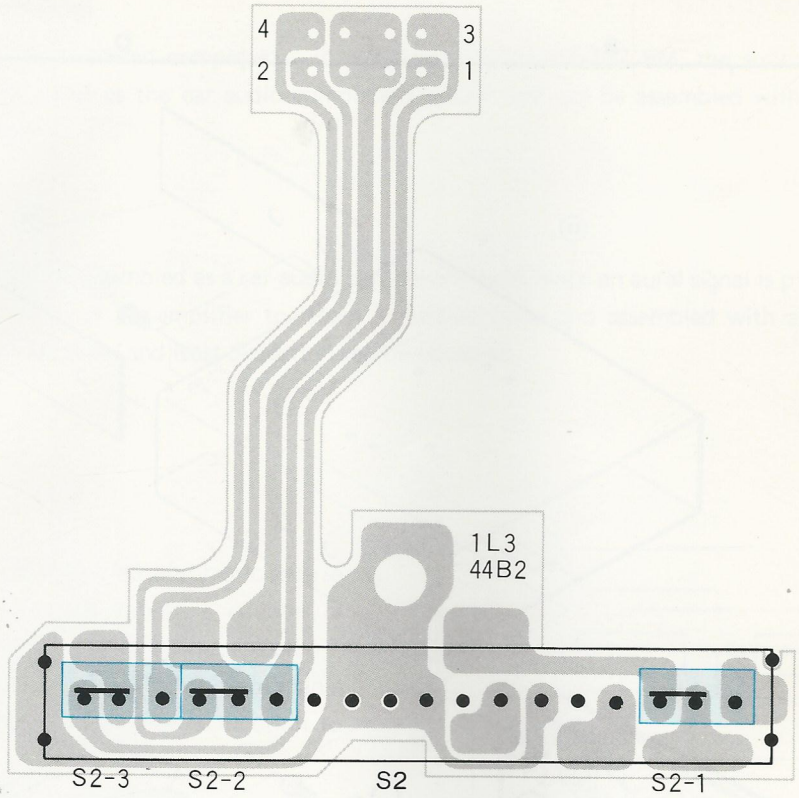


## PWB-REV

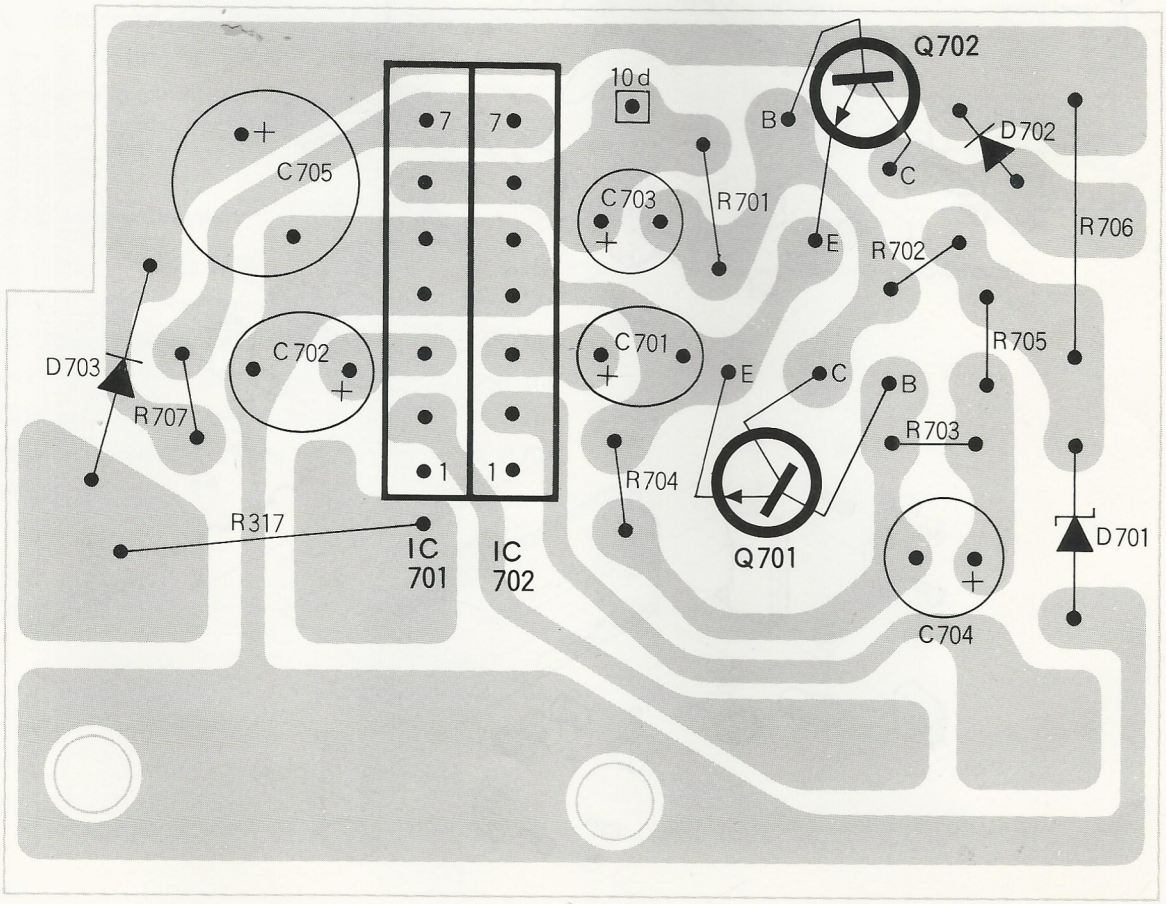

# PARTS LIST

## 2) Electrical Parts

| REF. NO. | PART NO. | DESCRIPTION | |
|---|---|---|---|
| **RESISTORS & CAPACITOR** | | | |
| VR303,304 403,404 | 123 L04805 | VR-DOUBLE SHAFT | 50kΩ |
| VR301,401 | 123 L04806 | " | 20kΩ |
| VR302 | 129 L04202 | VR-BALANCE | 50kΩ |
| CP1, 2 | 141 P02002 | 1000PF LEAD THROUGH TYPE | |
| **SEMICONDUCTORS** | | | |
| Q301,401 | 260 P04508 | TR | 2SC458 |
| Q701 | 260 P17506 | " | 2SC711 |
| Q702 | 260 P28005 | " | 2SC1210 |
| D701 | 264 P02502 | DIODE | MZ208 |
| D301 702,703 | 264 P08801 | " | V-06C |
| D302,303 | 264 P19803 | LED | GL-9PG6 |
| IC301 | 266 P31601 | IC | M51521L |
| IC302 | 266 P33401 | " | M51515L |
| IC701,702 | 266 P62301 | " | AM6250 |
| **TRANSFORMER** | | | |
| L301 | 351 P00105 | TRANS CHOKE | |
| **OTHERS** | | | |
| | 241 L34402 | FPC-SW-HEAD | |
| | 241M15601 | PWB-MOTOR | |
| | 242 L04303 | LEAD-6CM | |
| | 242M14301 | LEAD | |
| | 431 P01305 | SW-SLIDE | |
| S5 | 432 L02902 | SW-PUSH | |
| S1 | 439 L00101 | SW-SQ | |
| S3, 4 | 439M00901 | SW-WIRE | |
| | 450 L00801 | DIN CABLE (7S) | |
| | 459M01801 | SHORT PLUG (7P) | |
| | 460 L01902 | HEAD | |
| | 479 L01102 | MAGNETIC CLUTCH | |
| | 943 L92902 | ASSY MOTOR | |

# SCHEMATIC DIAGRAM
# MODEL:GX-102EM

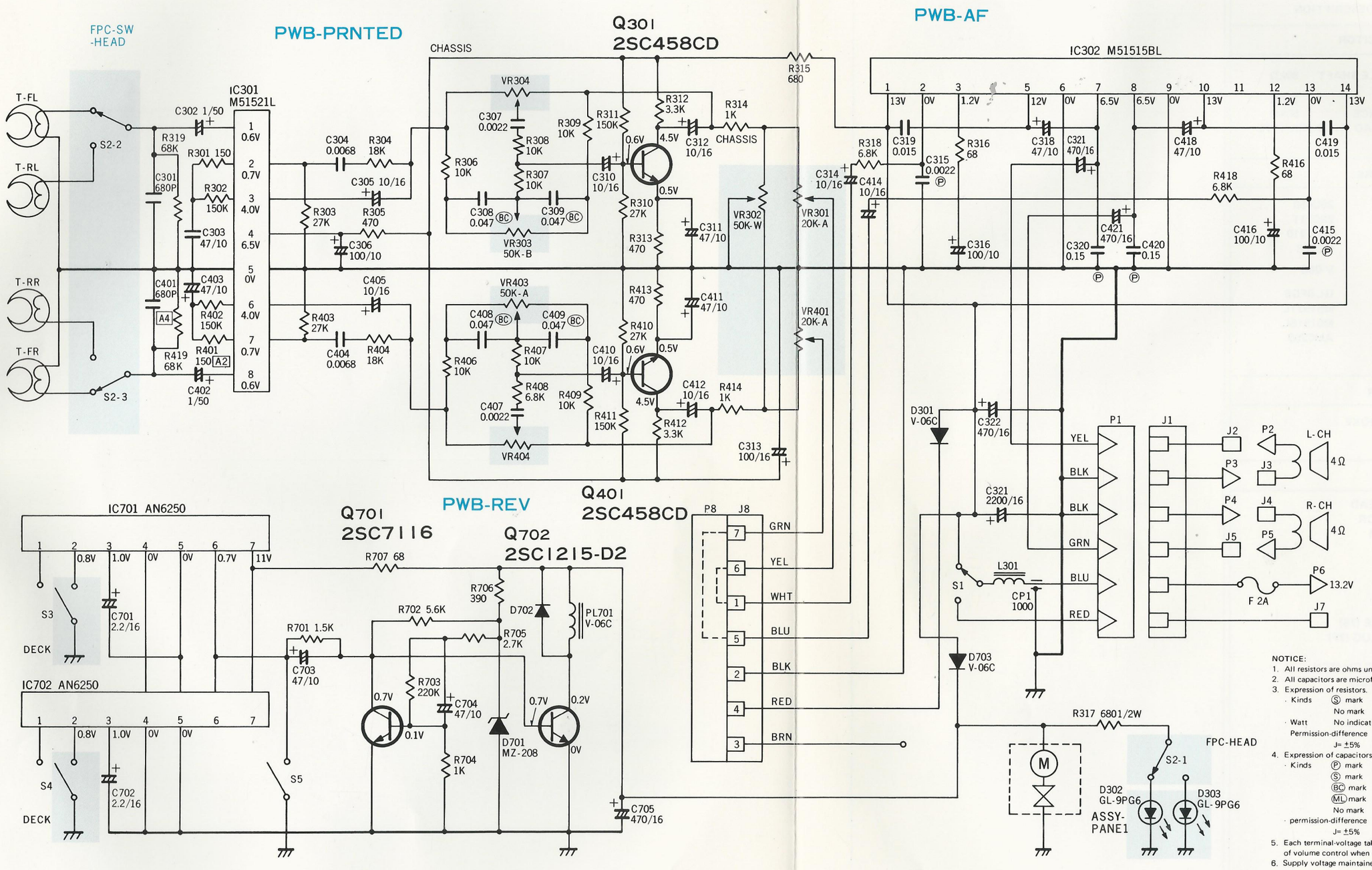


NOTICE:
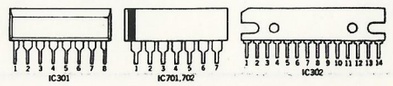
1. All resistors are ohms unless otherwise specified K=$10^3$ ohm, M=$10^6$ ohm.
2. All capacitors are microfarads unless otherwise specified P=$10^{-6}$ microfarad.
3. Expression of resistors.
   - Kinds Ⓢ mark — Composition resistor
     No mark — Carbon resistor or Printed resistor
   - Watt No indication = ¼W
   - Permission-difference
     J= ±5% — No indication=±10%
4. Expression of capacitors
   - Kinds Ⓟ mark — Polyester film capacitor
     Ⓢ mark — Styrol capacitor
     (BC) mark — Ceramic capacitor type BC
     (ML) mark — Polypropilene film capacitor
     No mark — Ceramic capacitor
   - permission-difference
     J= ±5% K= ±10% M=±20%
5. Each terminal-voltage taken with circuit tester at the minimum position of volume control when no signal is given.
6. Supply voltage maintained at rated value for voltage readings. (13.2V)
7. Other:
   - S1 is power supply switch.
   - S2 is running change-over switch.
   - S3, 4 are tape end detecting switches.
   - S5 is manual reverse switch.