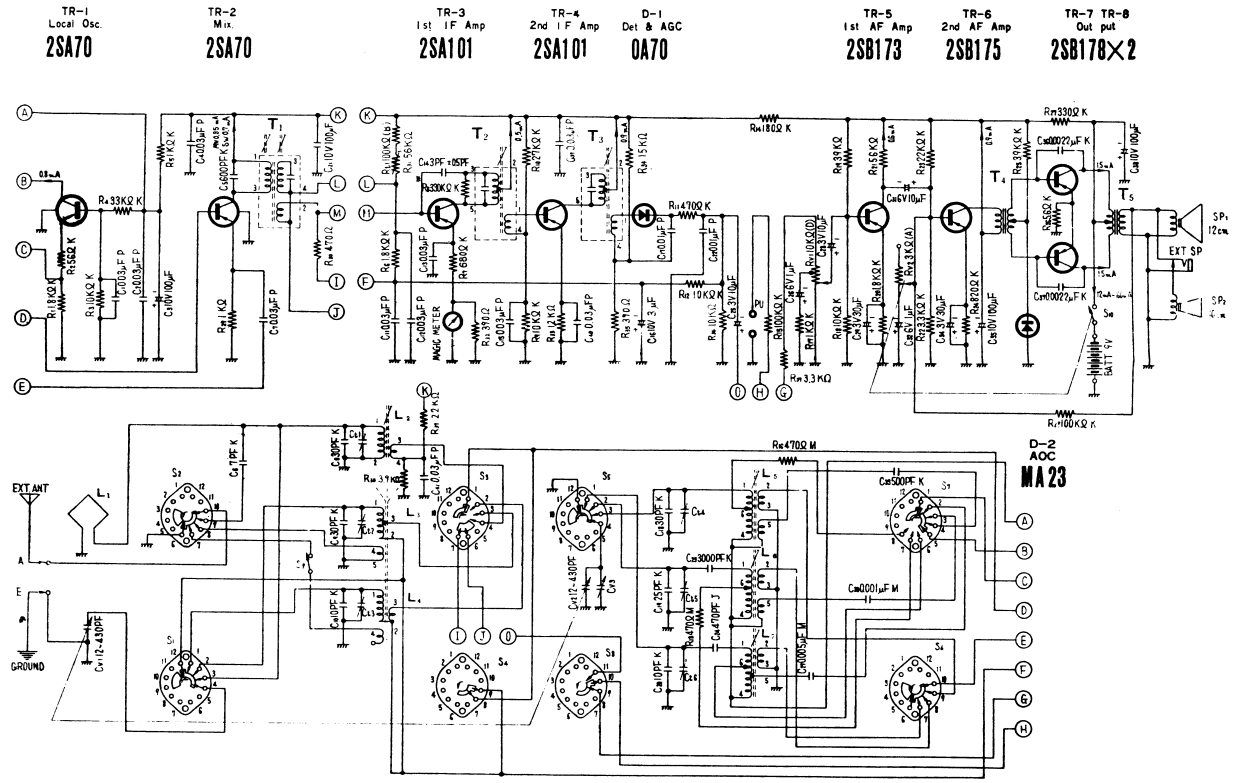

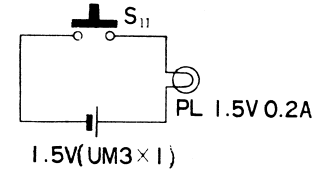

Notes :

1. R_7 resistor marked with ※ uses one of the following resistor values because of characteristics of transistors : 300KΩ, 220KΩ or ∞
2. S_1～S_8 are PHONO and Band Selection Switches. These are now at PHONO position in the circuit diagram.
3. S_9 is LOOCAL DX Selection Switch on MW band, and is now at DX position.
4. S_{10} is Power Switch.
5. RV_2 is now at the position of Low-Tone.
6. The letter signs (J, K, M & P) in the circuit diagram show allowable deviations of resistors and capacitors as follows :

J.....± 5%
K .....± 10%
M .....± 20%
P.....+100%
.....− 0%

TRANSISTORS		VOLTAGES (V)		
		COLLECTOR	BASE	EMITTER
TR_1	2SA70	−5.7V	−1.01V	−1.1V
TR_2	2SA70	−6.45V	−0.6V	−0.54V
TR_3	2SA101	−6.45V	−0.7V	−0.65V
TR_4	2SA101	−6.6V	−1.15V	−1.2V

TRANSISTORS		VOLTAGES (V)		
		COLLECTOR	BASE	EMITTER
TR_5	2SB173	−3.2V	−1V	−1.24V
TR_6	2SB175	−6.4V	−0.8V	−0.76V
TR_7	2SB178	−9V	−0.13V	−0V
TR_8	2SB178	−9V	−0.13V	−0V

SPECIFICATIONS

Frequency Range :	MW 535～1605KC (561～187m)
	SW_1 3.2～8.5MC (93.8～35.3m)
	SW_2 8.5～22MC (35.4～13.6m)
Intermediate Frequency :	455KC
Sensitivity :	MW 100μV/m/50mW
	SW_1 100μV/m/50mW
	SW_2 100μV/m/50mW
Power Output :	500mW undistorted
	800mW maximum
Speakers :	5″ (12cm) plus 4″ (10cm)
	PM dynamic speakers

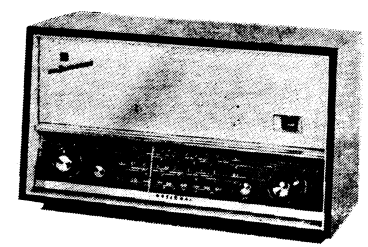

NATIONAL MODEL GT373

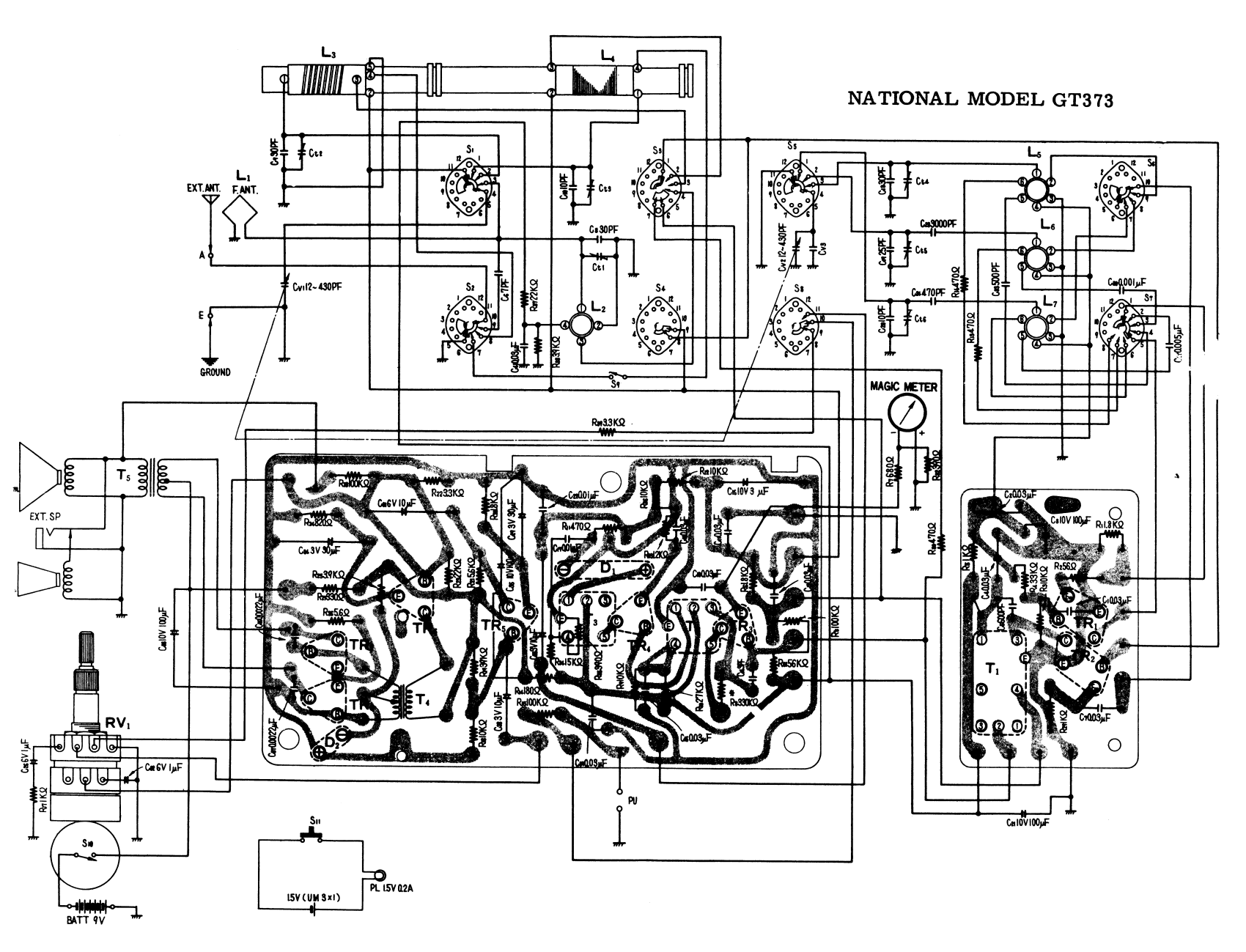

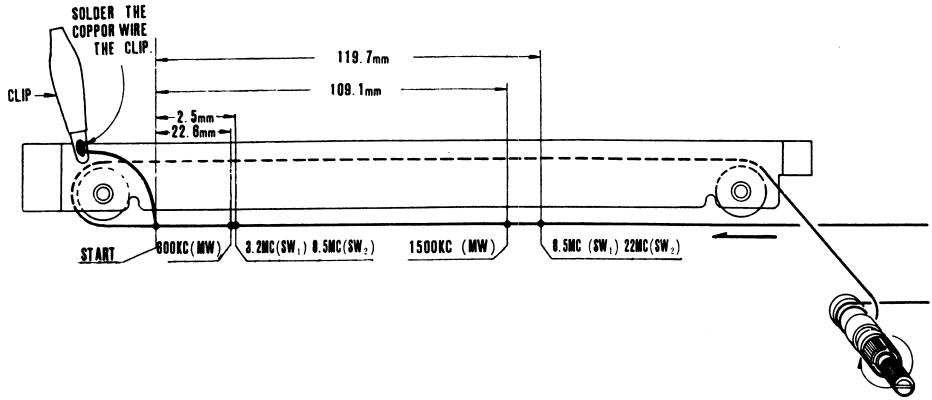

Mark alignment points on the dial rope with pen or pencil, make a subsidiary dial pointer as per the figure and fix the clip to chassis trying to make the tip of the subsidiary pointer fit to the starting mark on the rope. The variable capacitor is now at the maximum position and the rota is completely hidden in the stator.
By turning the tuning shaft, move the subsidiary pointer and adjust accurately trying to make every alignment point on the rope fit to the tip of the pointer one by one.
Be careful not to sway the subsidiary pointer during the alignment.

ALIGNMENT PROCEDURE

OUTPUT METER ..... Connect Output Meter across speaker voice coil terminals.
OUTPUT LEVEL ..... Attenuate Test Oscillator output always to maintain 0.5 volt on Output Meter to prevent overloading of the receiver.
TEST OSCILLATOR ..... Modulate Test Oscillator at 400 c/s and connect the lead wire of Test Oscillator output to Radiation loop coil.
RADIO RECEIVER..... Place the radio receiver 24″ (60cm) away from Radiation loop coil.

Table :

Step	Band Switch Position	Test Oscillator		Radio Receiver	
		Connection to radio receiver	Dial setting	Dial setting	Adjust for maximum output
1	MW (DX)	Use radiation loop coil. (See Fig. 1.)	455 KC	Quiet point 530 KC	Top screws of IF transformers
2			600 KC	600 KC	Screw of MW OSC coil (L_7) Inductance of MW ANT coil (L_4)
3			1500 KC	1500 KC	Screw of MW OSC trimmer (Ct_6) Screw of MW ANT trimmer (Ct_3)
4			600 KC & 1500 KC	600 KC & 1500 KC	Repeat steps (2) and (3).
5	SW		3.2 MC	3.2 MC	Screw of SW_1 OSC coil (L_6) Inductance of SW_1 ANT coil (L_3)
6			8.5 MC	8.5 MC	Screw of SW_1 OSC trimmer (Ct_5) Screw of SW_1 ANT trimmer (Ct_2)
7			3.2 MC & 8.5 MC	3.2 MC & 8.5 MC	Repeat steps (5) and (6).
8	SW		8.5 MC	8.5 MC	Screw of SW_2 OSC coil (L_5) Screw of SW_2 ANT coil (L_2)
9			22 MC	22 MC	Screw of SW_2 OSC trimmer (Ct_4) Screw of SW_2 ANT trimmer (Ct_1)
10			8.5 MC & 22 MC	8.5 MC & 22 MC	Repeat steps (8) and (9).
11	Check if the above dial settings for SW band are not made at image frequency.				

NATIONAL MODEL GT373