Gotham Audio to Sovtek

- **This File contains 163 schematics from the manufacturers Gotham Audio to Sovtek**
- **To use this file click on the Show/Hide Navigation Pane (on the menu bar), and then click the Bookmarks tab**
- **or ... Choose Window > Show Bookmarks**
- **Click the bookmark for the manufacturer whose schematics you wish to view**
- **If the entry has a triangle to the left, click on the triangle to view sub-entries**

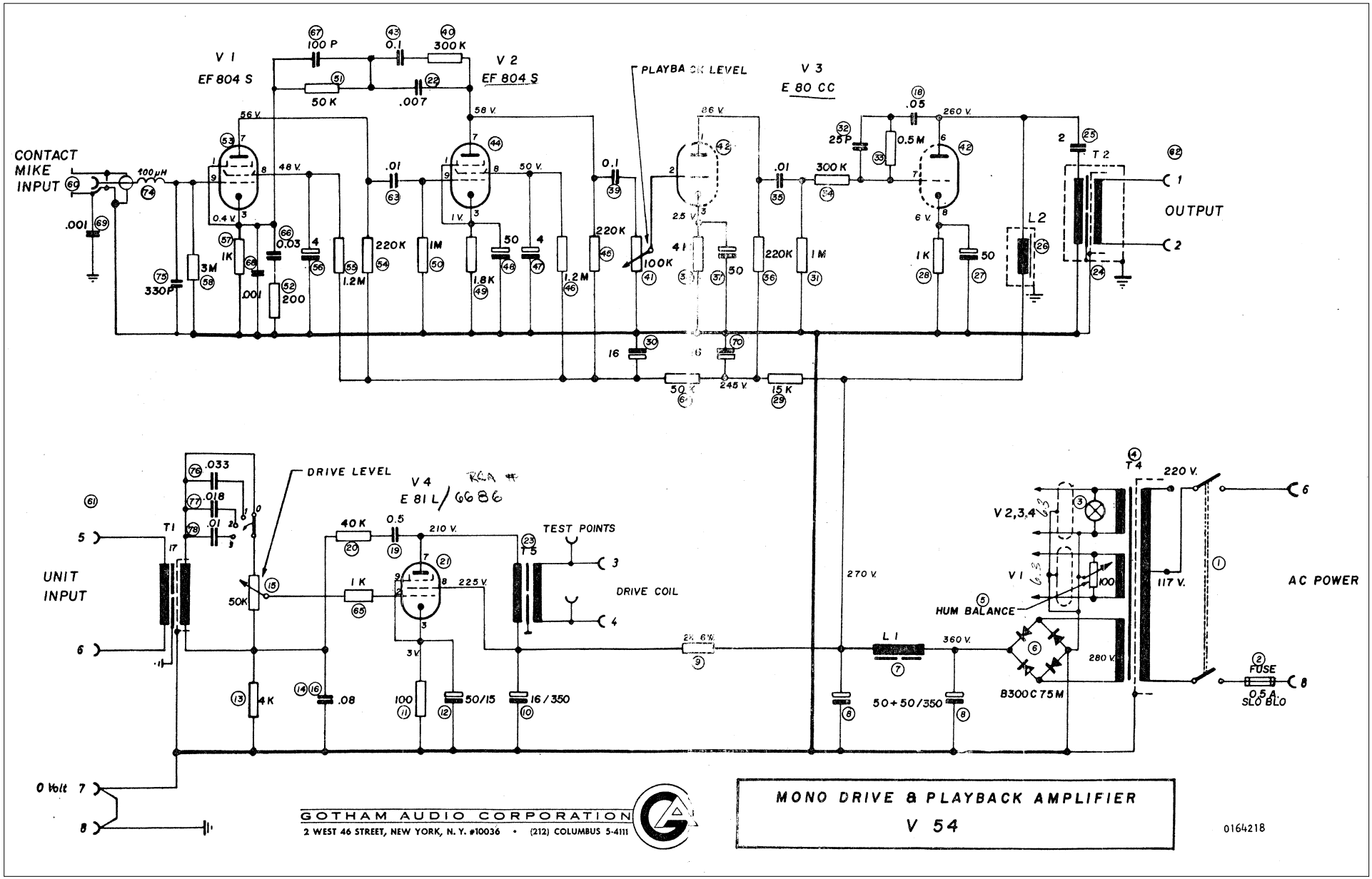
V 1
EF 804 S
V 2
EF 804 S
V 3
E 80 CC
V 4
E 81 L / 6686
CONTACT MIKE INPUT
PLAYBACK LEVEL
OUTPUT
DRIVE LEVEL
UNIT INPUT
TEST POINTS
DRIVE COIL
HUM BALANCE
AC POWER
FUSE 0.5 A. SLO BLO
B300C 75M
50+50/350
16/350
50/15
0 Volt
GOTHAM AUDIO CORPORATION
2 WEST 46 STREET, NEW YORK, N. Y. #10036 • (212) COLUMBUS 5-4111
MONO DRIVE & PLAYBACK AMPLIFIER
V 54
0164218

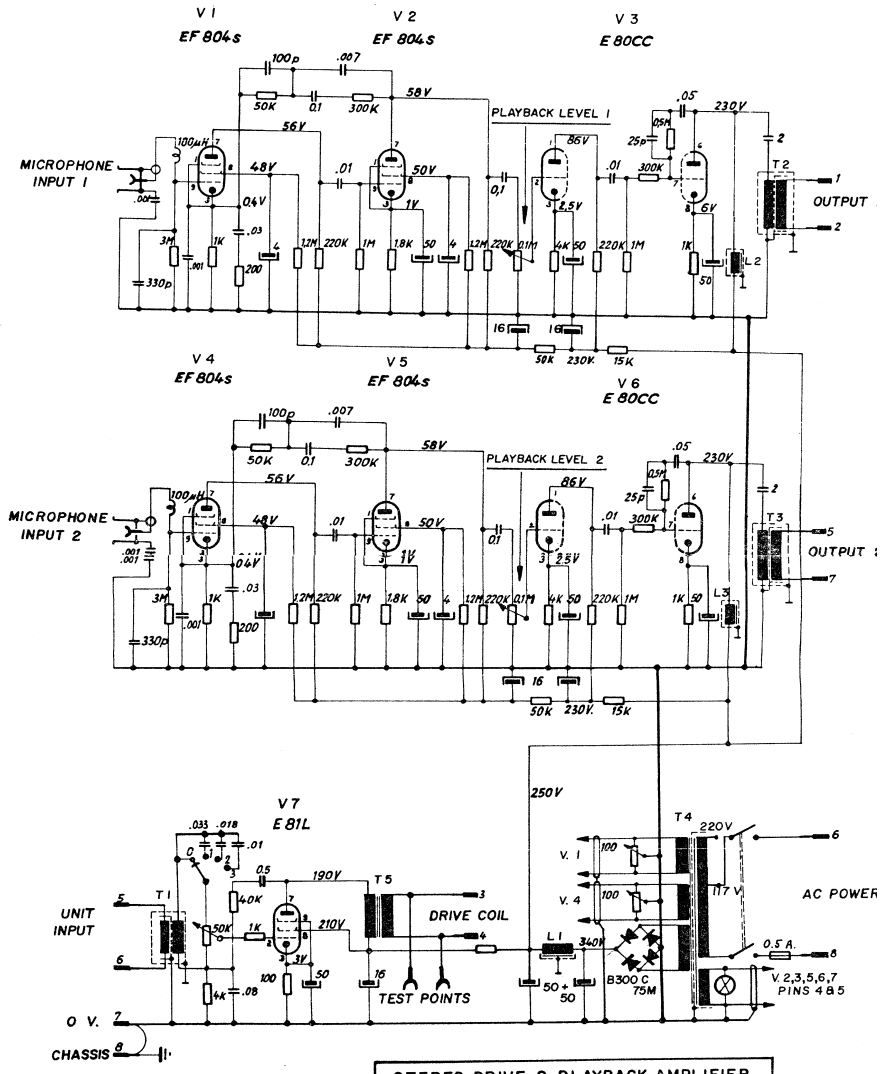
V 1
EF 804s
V 2
EF 804s
V 3
E 80CC
V 4
EF 804s
V 5
EF 804s
V 6
E 80CC
V 7
E 81L
MICROPHONE INPUT 1
MICROPHONE INPUT 2
PLAYBACK LEVEL 1
PLAYBACK LEVEL 2
OUTPUT 1
OUTPUT 2
UNIT INPUT
DRIVE COIL
TEST POINTS
AC POWER
V. 2,3,5,6,7 PINS 4 & 5
0 V.
CHASSIS
STEREO DRIVE & PLAYBACK AMPLIFIER
V 54 ST
0164217
GOTHAM AUDIO CORPORATION
2 WEST 46 STREET, NEW YORK, N. Y. #10036 • (212) COLUMBUS 5-4111

Serial
T53159

#6166

GRETSCH
CHET ATKINS

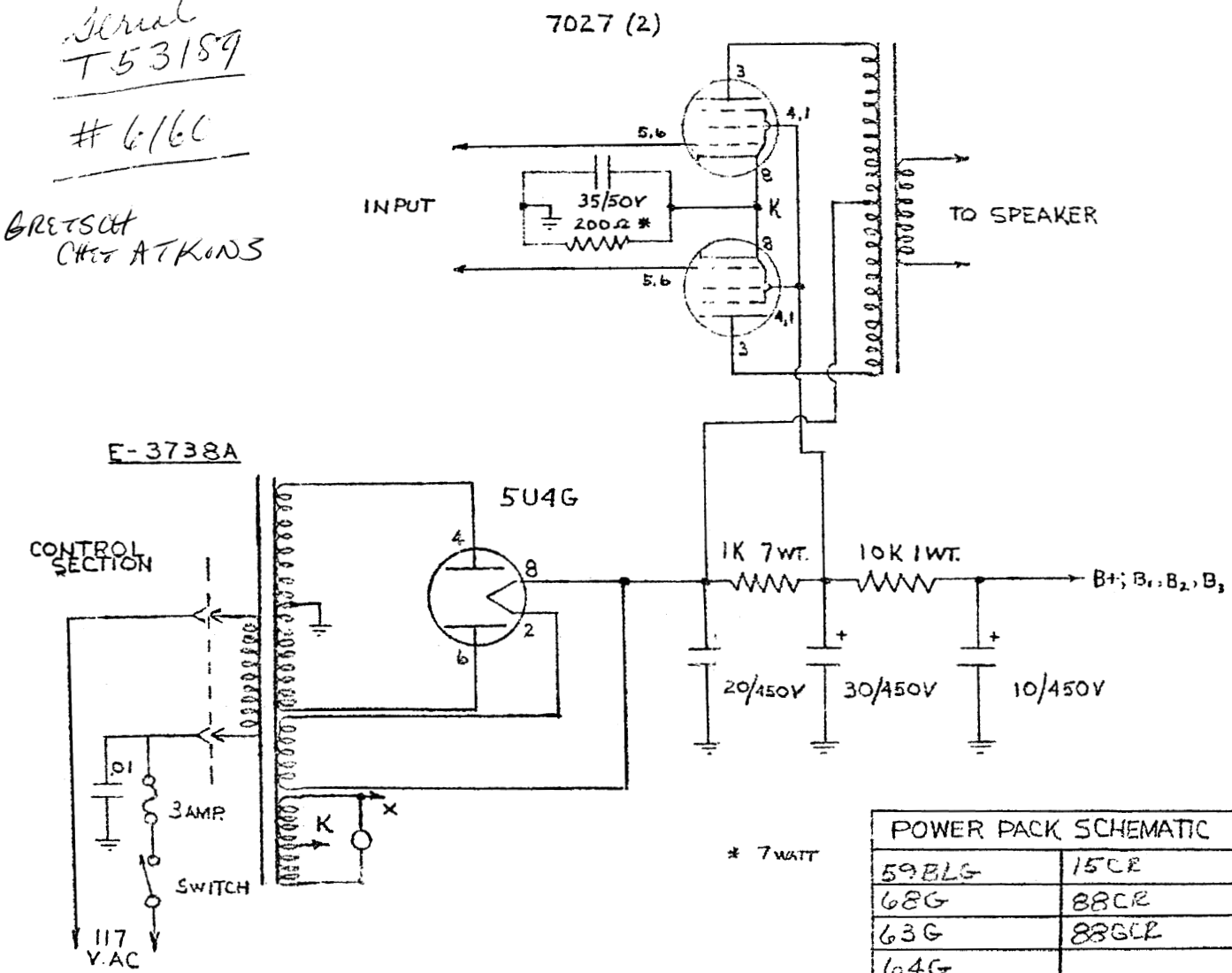

POWER PACK SCHEMATIC	
59BLG	15CR
68G	88CR
63G	88GCR
64G	

TUBE DIRECT UNIT

GT Electronics

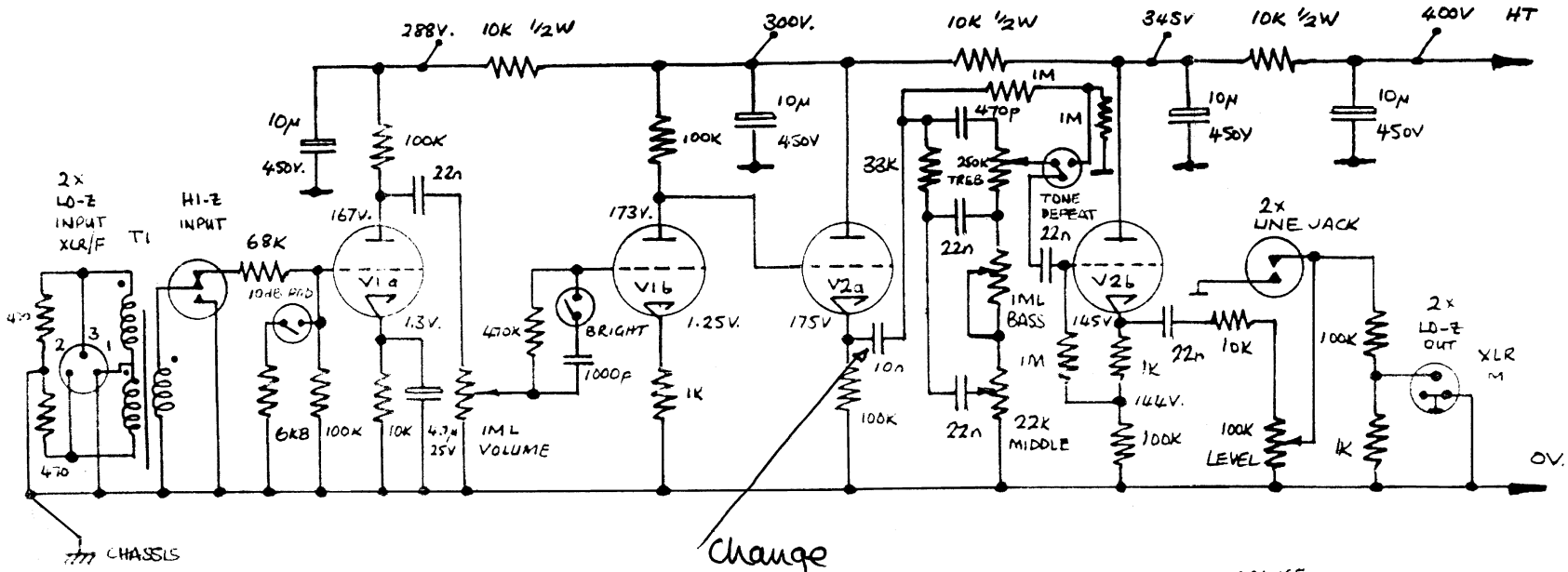

① ALL RESISTORS ¼W. METAL FILM UNLESS SPECIFIED
② ALL CAPACITORS 400V. UNLESS SPECIFIED
③ TUBES 2 × 12AX7GT (ECC83GT/7025GT)
④ DC VOLTAGES MEASURED WITH NO SIGNAL, ON FLUKE 8022B DMM.

Greetings from Micky in the UK
TDU modification as shown.

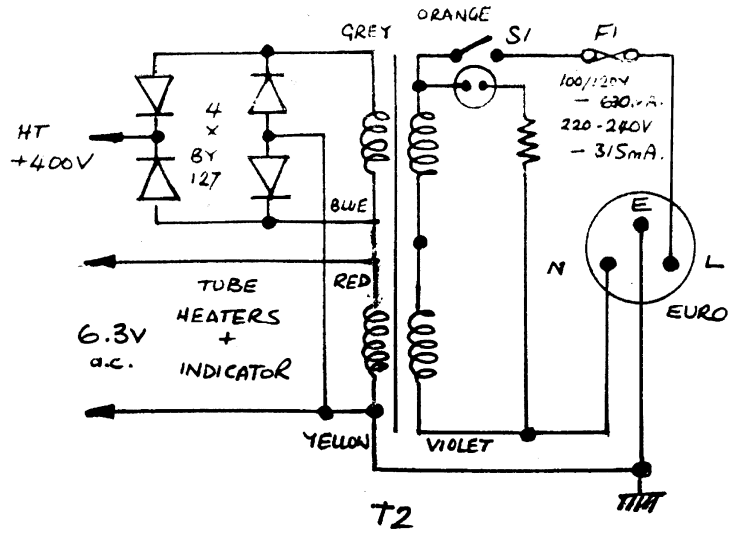

G.T. ELECTRONICS	TUBE DIRECT UNIT
DRAWN BY: M. Ameson	DATE: 21 DEC 87
ISSUE # ①	

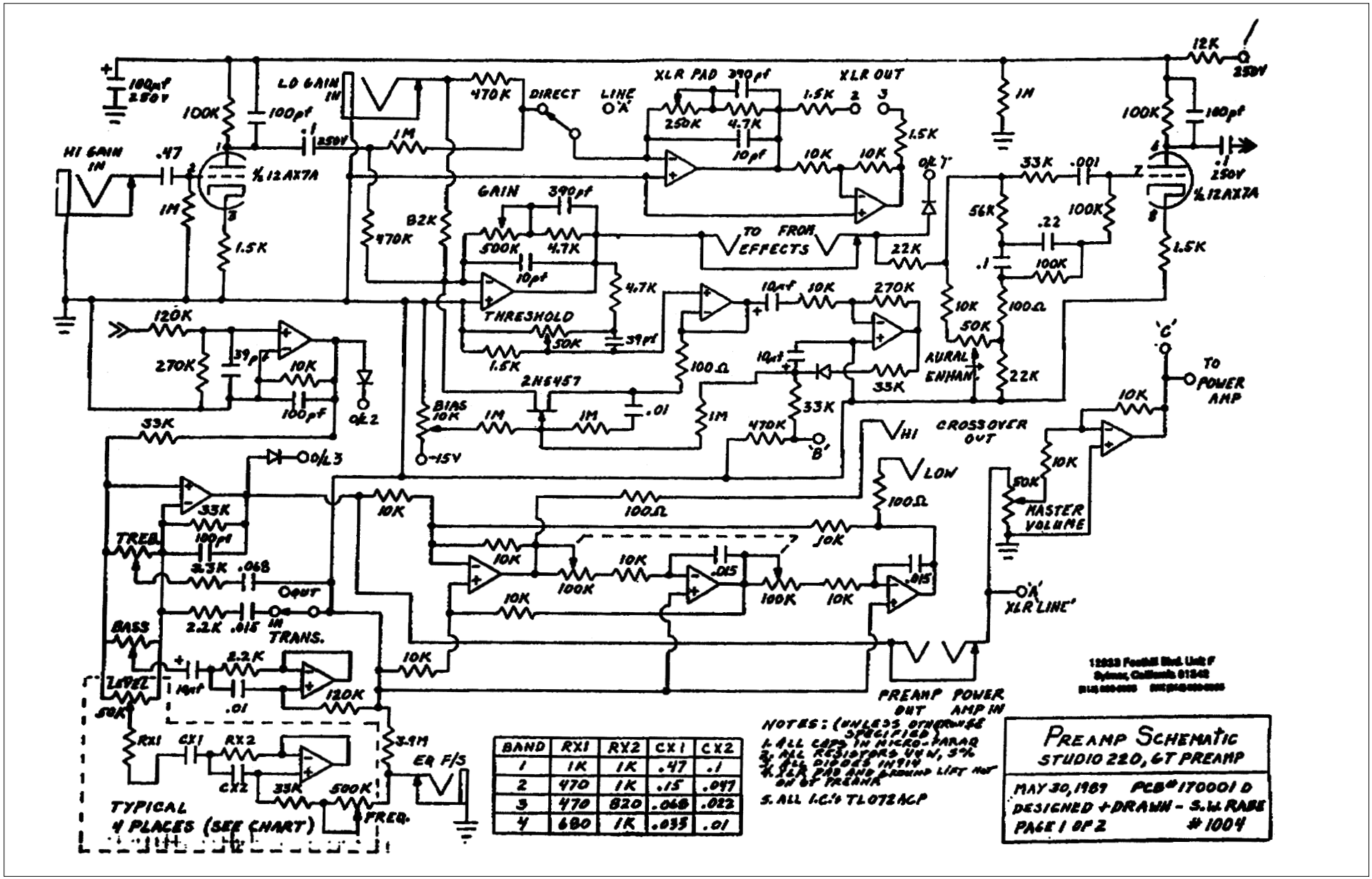

BAND	RX1	RX2	CX1	CX2
1	1K	1K	.47	.1
2	470	1K	.15	.047
3	470	820	.068	.022
4	680	1K	.033	.01

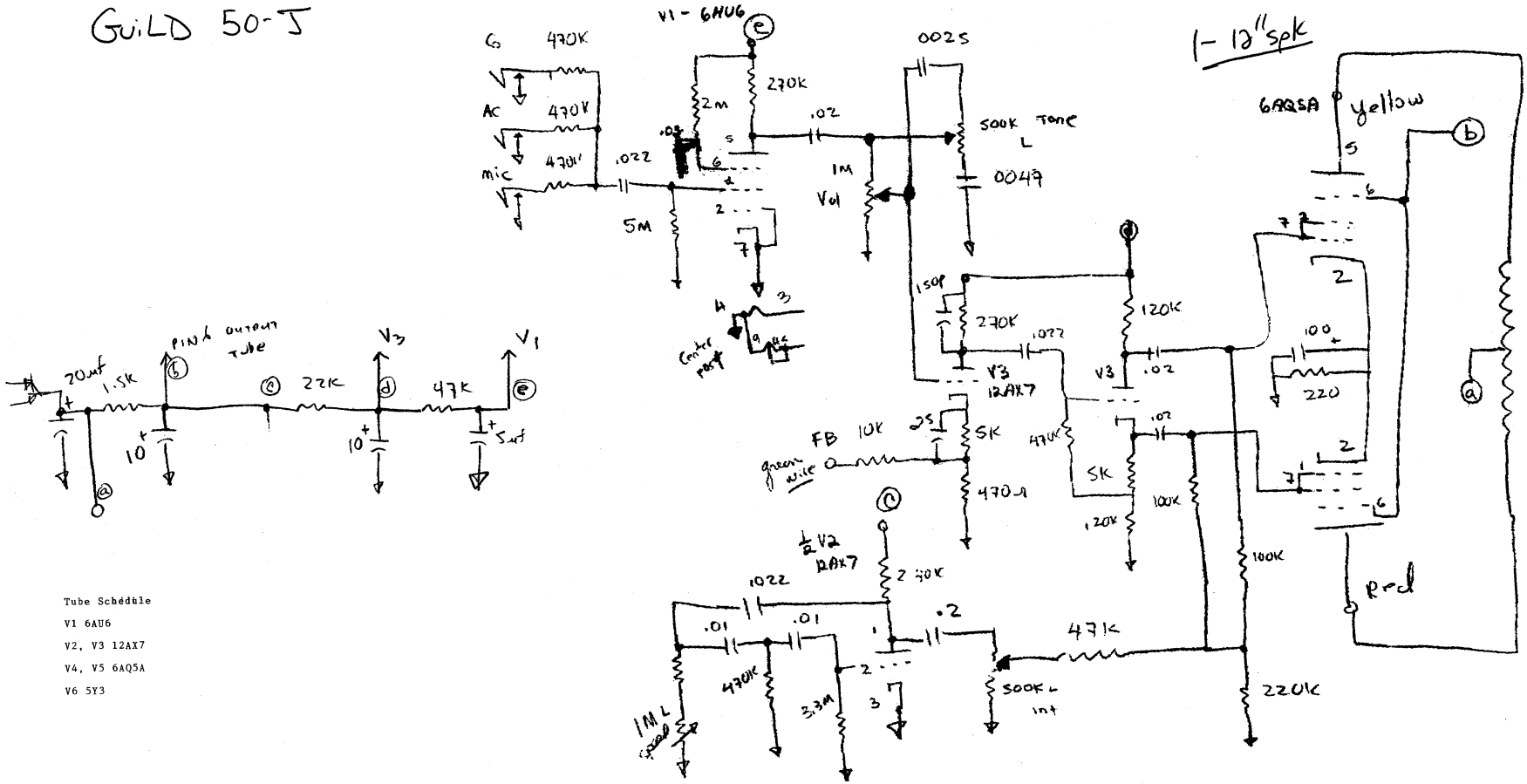

Tube Schedule

V1 6AU6

V2, V3 12AX7

V4, V5 6AQ5A

V6 5Y3

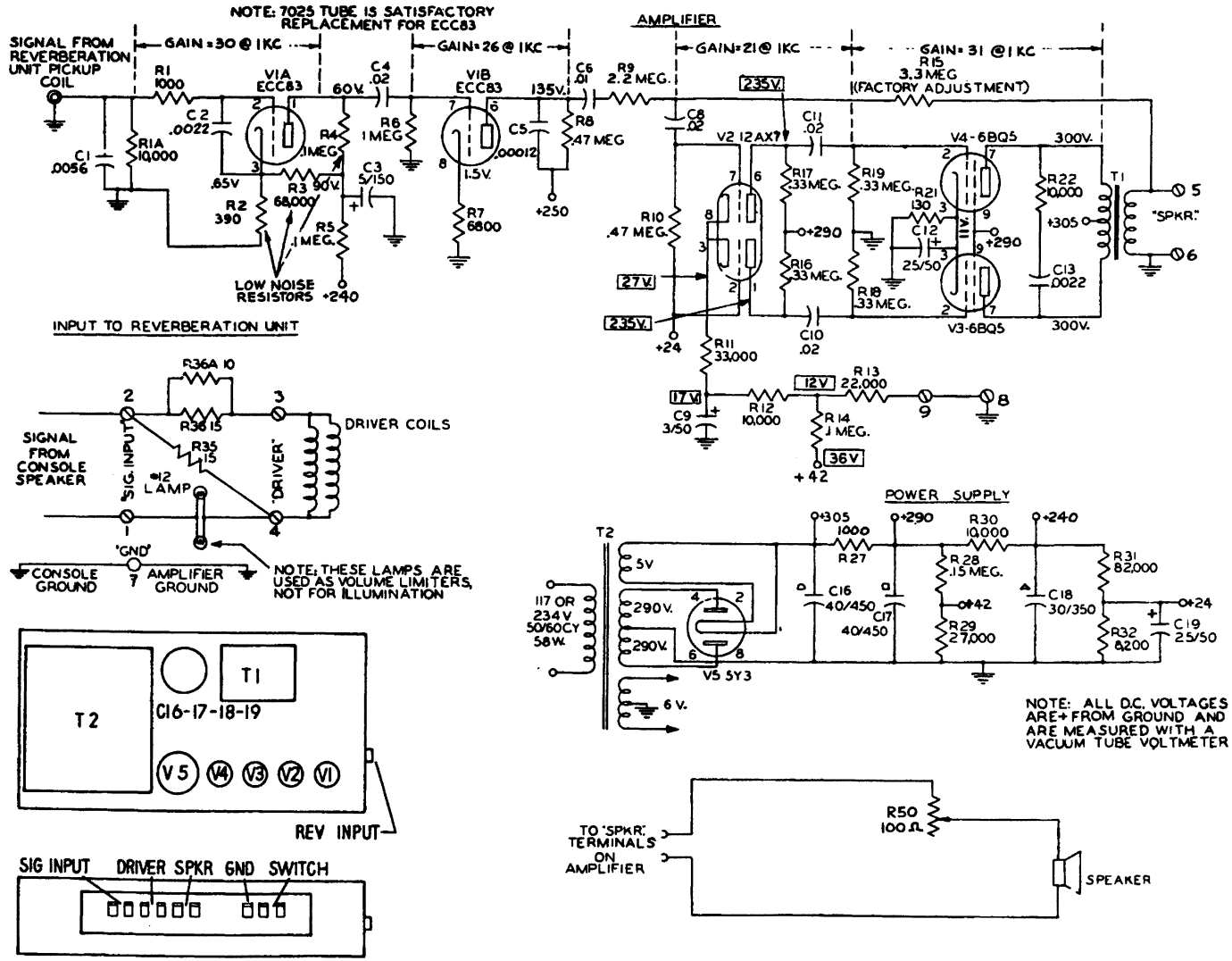

FIGURE 34 - SCHEMATIC, REVERBERATION AMPLIFIER AO 35 USED IN EARLY SERIES A-100 CONSOLES

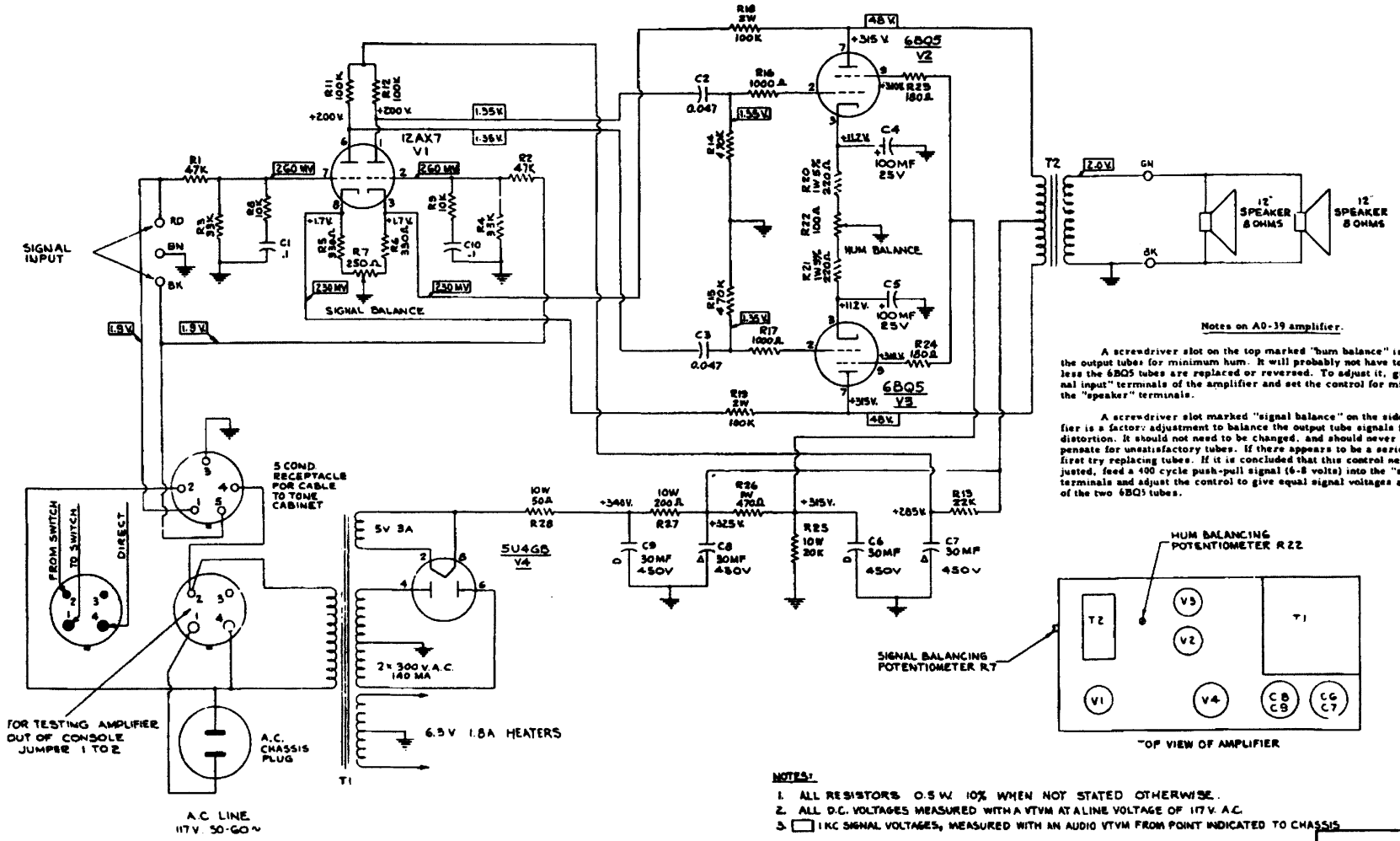

Notes on AO-39 amplifier.

A screwdriver slot on the top marked "hum balance" is used to balance the output tubes for minimum hum. It will probably not have to be changed unless the 6BQ5 tubes are replaced or reversed. To adjust it, ground both "signal input" terminals of the amplifier and set the control for minimum hum at the "speaker" terminals.

A screwdriver slot marked "signal balance" on the side of the amplifier is a factory adjustment to balance the output tube signals for minimum distortion. It should not need to be changed, and should never be used to compensate for unsatisfactory tubes. If there appears to be a serious unbalance, first try replacing tubes. If it is concluded that this control needs to be adjusted, feed a 400 cycle push-pull signal (6-8 volts) into the "signal input" terminals and adjust the control to give equal signal voltages at the plates of the two 6BQ5 tubes.

NOTES:

1. ALL RESISTORS 0.5 W. 10% WHEN NOT STATED OTHERWISE.
2. ALL D.C. VOLTAGES MEASURED WITH A VTVM AT A LINE VOLTAGE OF 117 V. A.C.
3. ▭ 1 KC SIGNAL VOLTAGES, MEASURED WITH AN AUDIO VTVM FROM POINT INDICATED TO CHASSIS

SCHEMATIC DIAGRAM
AO-39 POWER AMPLIFIER
USED IN HAMMOND ORGAN
A-100
A-101
A-102
FIGURE 32

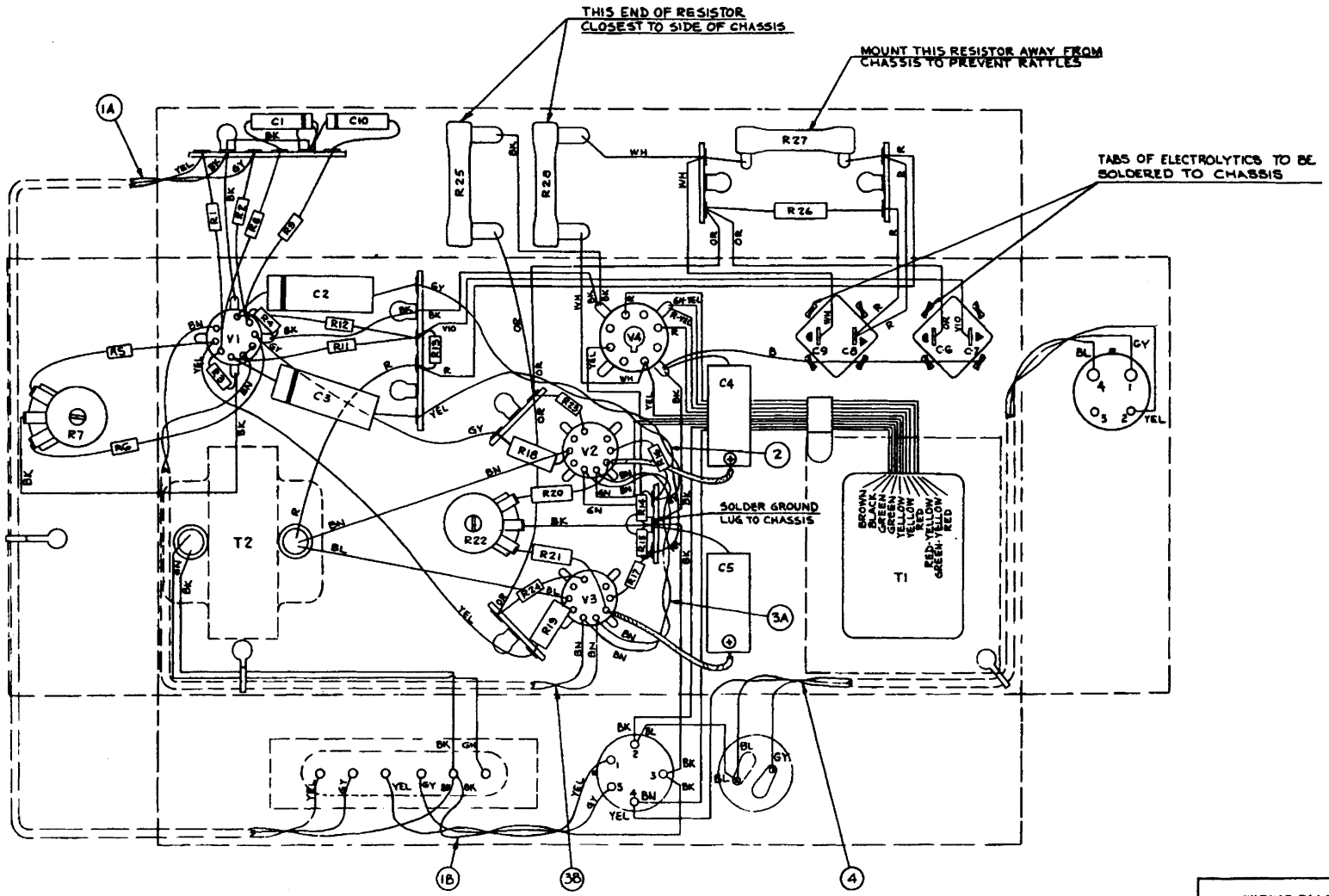

WIRING DIAGRAM
AO-39 POWER AMPLIFIER
USED IN HAMMOND ORGAN
A-100
A-101
A-102
FIGURE 33

NOTES:
ALL AC VOLTAGES MEASURED WITH A VTVM. (INPUT IMPEDANCE 1 MEG. OHM OR HIGHER)
ALL DC VOLTAGES MEASURED WITH A 20,000 OHMS/VOLT METER
ALL RESISTORS ½ W AND 10% UNLESS OTHERWISE SPECIFIED.

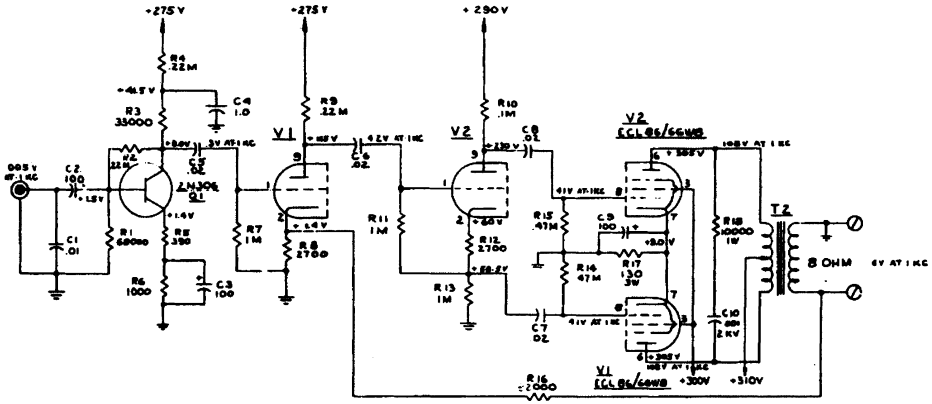

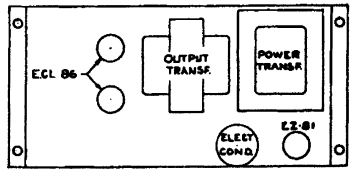

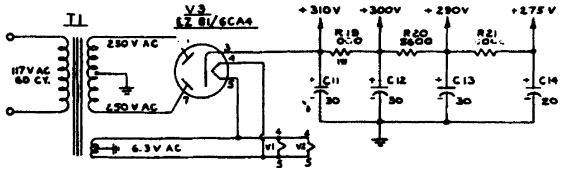

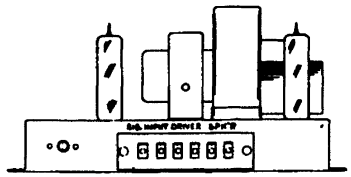

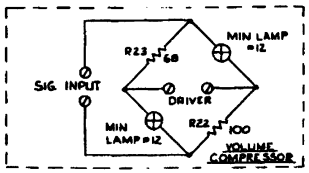

FIGURE 35 - SCHEMATIC, REVERBERATION AMPLIFIER AO-44 USED IN A-100 CONSOLES

NOTES:
ALL AC VOLTAGES MEASURED WITH A VTVM. (INPUT IMPEDANCE 1 MEG. OHM OR HIGHER)
ALL DC VOLTAGES MEASURED WITH A 20,000 OHMS/VOLT METER
ALL RESISTORS ½ W AND 10% UNLESS OTHERWISE SPECIFIED.

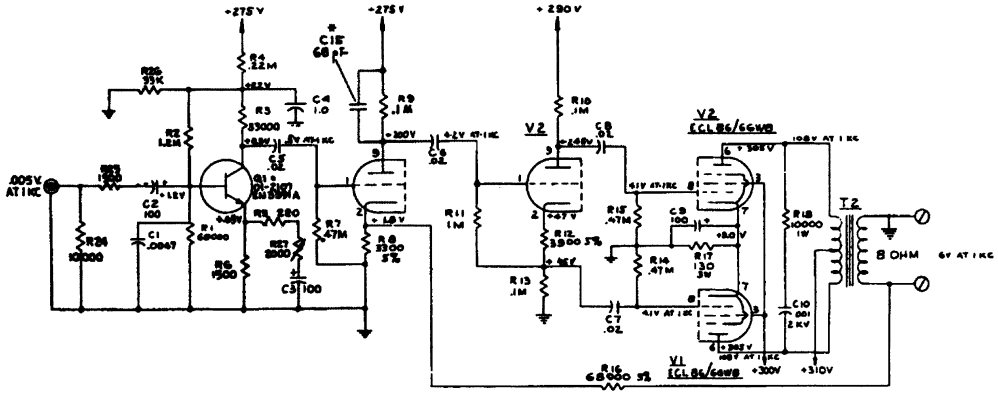

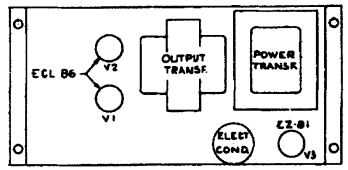

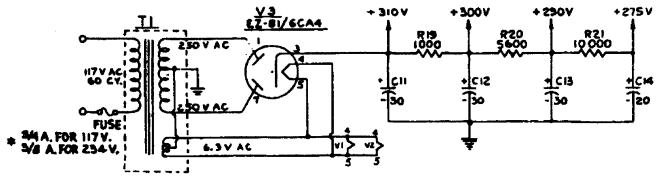

*These components will only be found in AO-44 amplifiers marked with Code "E"

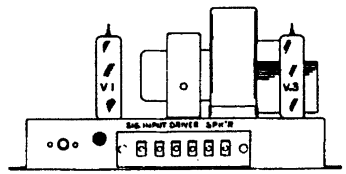

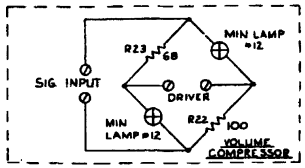

FIGURE 35A-SCHEMATIC REVERBERATION AMPLIFIER AO-44 USED IN LATER SERIES A-100 CONSOLES

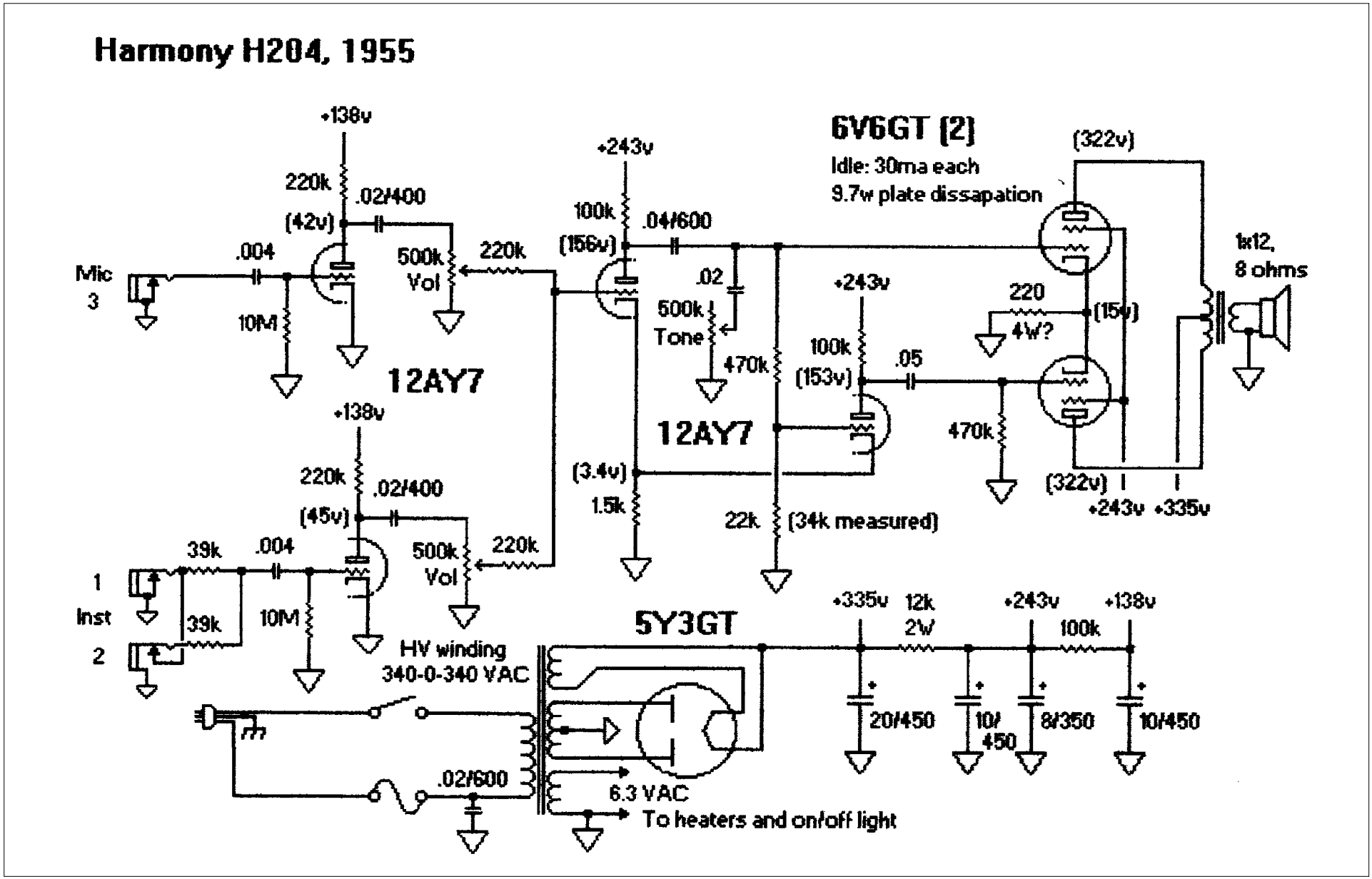
Harmony H204, 1955
+138v
220k
.02/400
(42v)
.004
Mic
3
10M
500k
Vol
220k
12AY7
+138v
220k
.02/400
(45v)
39k
.004
1
Inst
2
39k
10M
500k
Vol
220k
+243v
100k
.04/600
(156v)
.02
500k
Tone
470k
(3.4v)
1.5k
22k
(34k measured)
12AY7
+243v
100k
(153v)
.05
470k
6V6GT (2)
Idle: 30ma each
9.7w plate dissapation
(322v)
220
4W?
(15v)
(322v)
+243v
+335v
1x12,
8 ohms
HV winding
340-0-340 VAC
5Y3GT
.02/600
6.3 VAC
To heaters and on/off light
+335v
12k
2W
20/450
10/
450
+243v
100k
8/350
+138v
10/450

High-Power Amplifiers

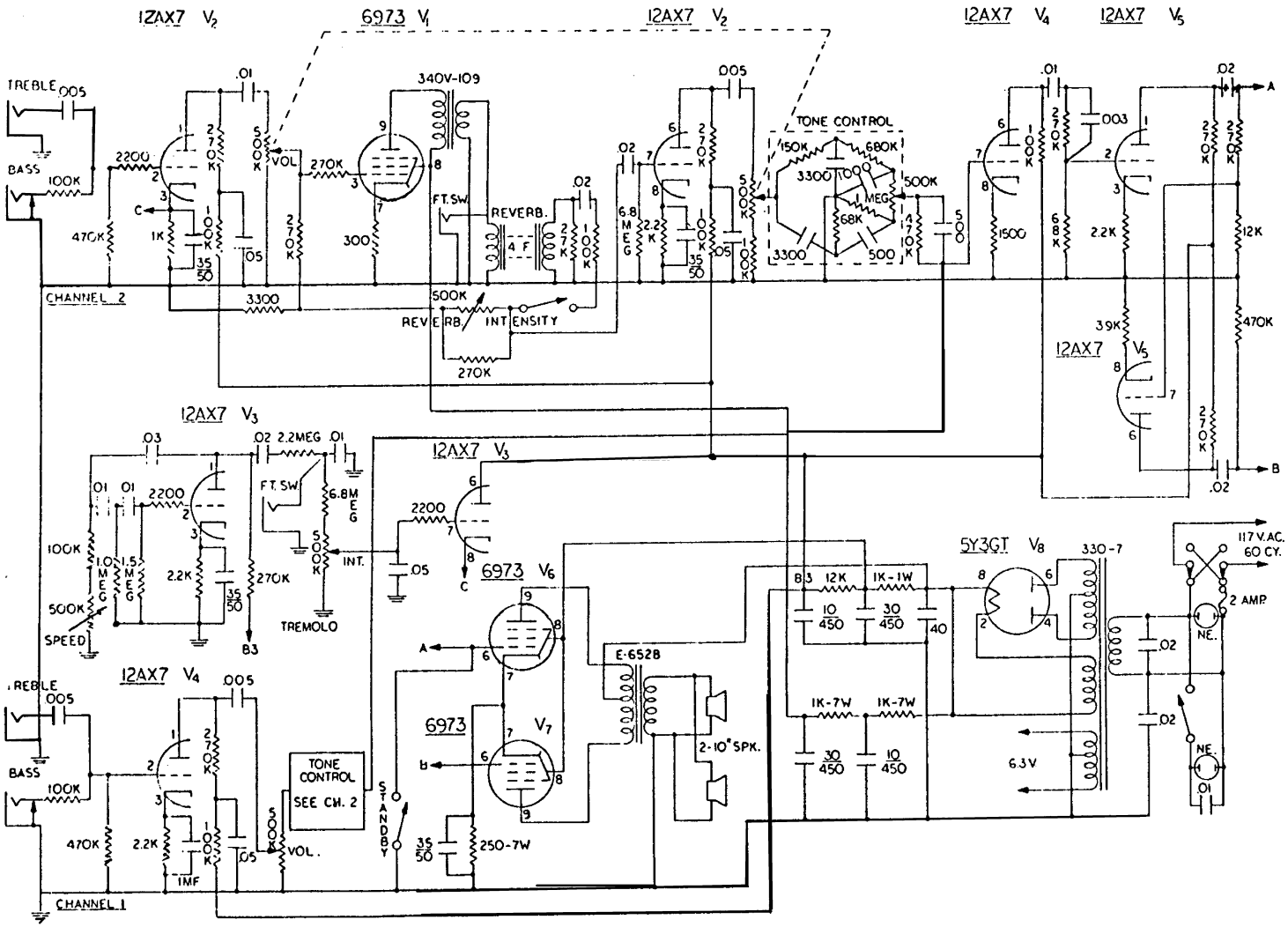

Harmony Model H-430

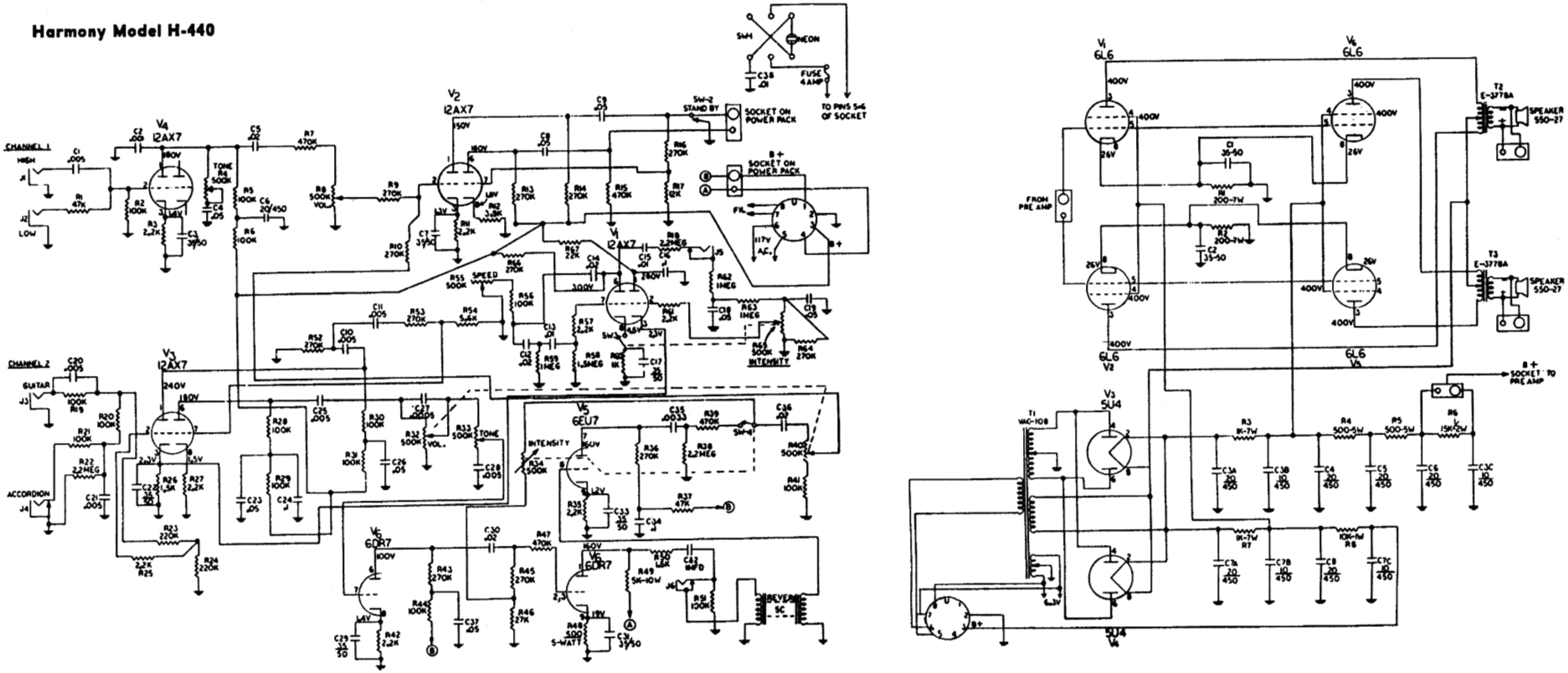
Harmony Model H-440
CHANNEL 1
HIGH
LOW
CHANNEL 2
GUITAR
ACCORDION
V4 12AX7
V2 12AX7
V1 12AX7
V3 12AX7
V5 6EU7
V6 6DR7
V7 6DR7
SOCKET ON POWER PACK
B+ SOCKET ON POWER PACK
SW-2 STAND BY
NEON
FUSE 4 AMP
TO PIN 5 & 6 OF SOCKET
SPEED
INTENSITY
TONE
VOL.
REVERB SC
V1 6L6
V4 6L6
V2 6L6
V4 6L6
FROM PRE AMP
T2 E-3778A
T3 E-3778A
SPEAKER 550-27
B+ SOCKET TO PRE AMP
T1 VAC-108
V3 5U4
V4 5U4

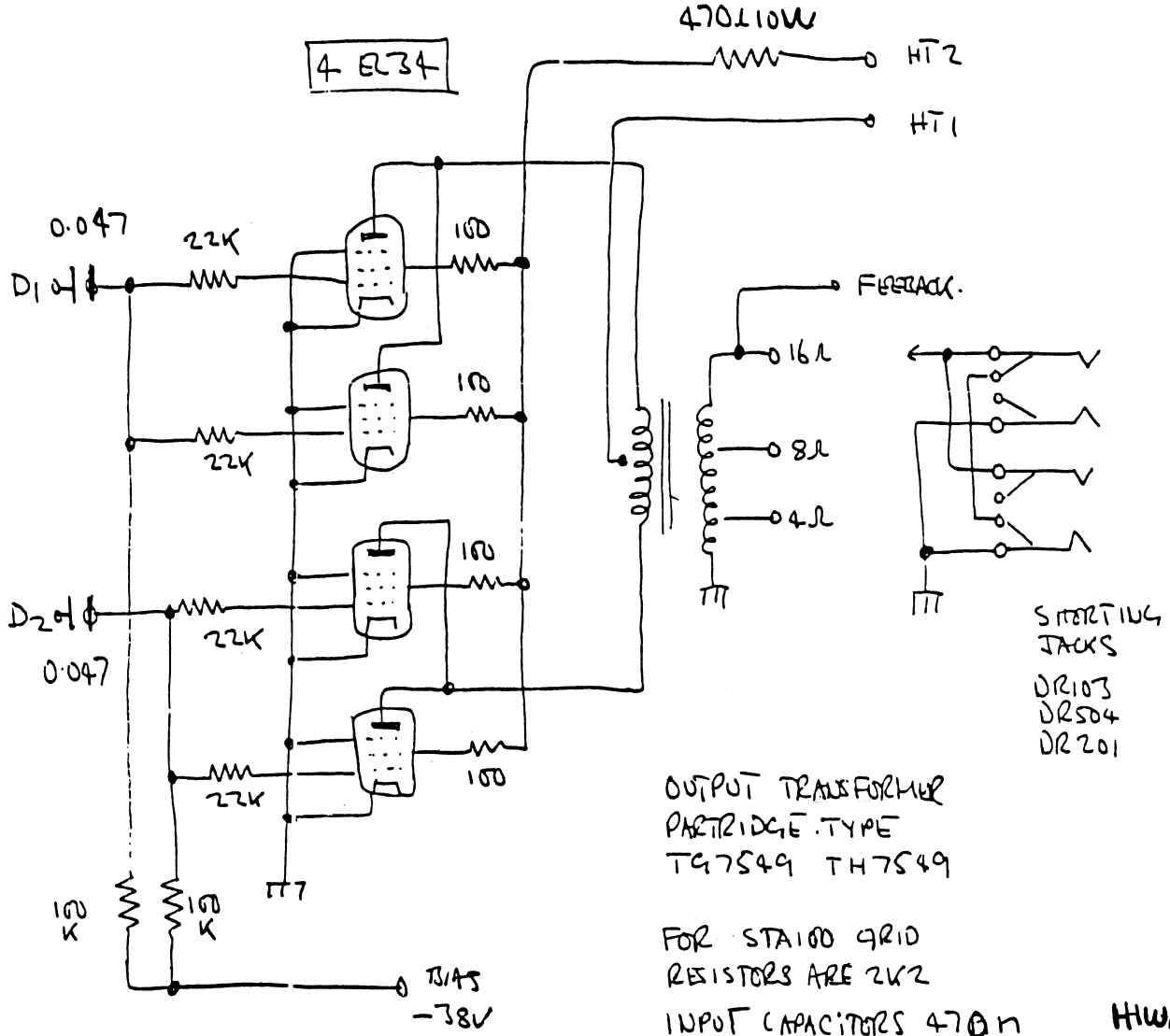

HIWATT

OUTPUT STAGE

DR103
DR112
SA 112 FL
SA 115 FL

STA 100 SLAVE

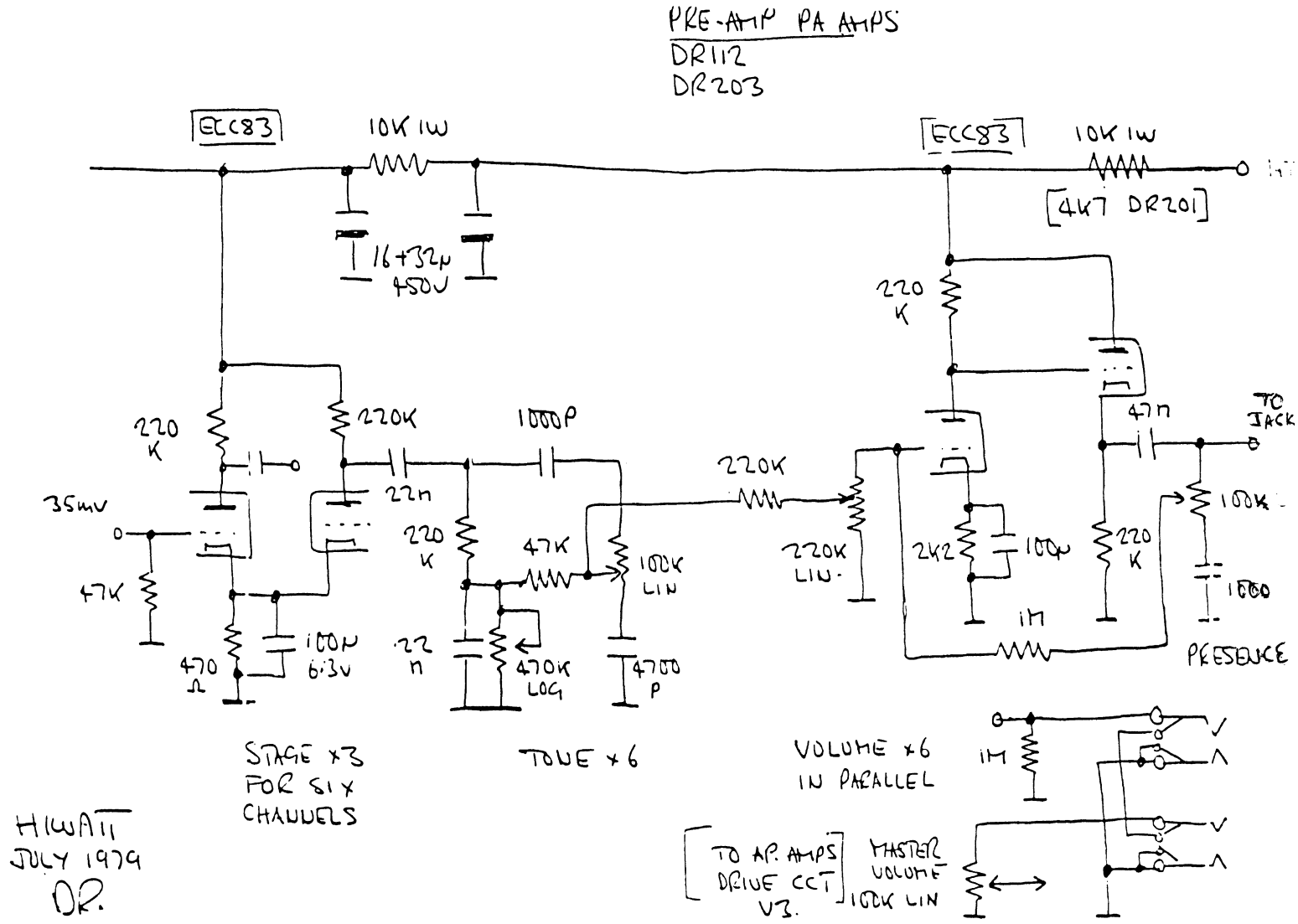
PRE-AMP PA AMPS
DR112
DR203
ECC83
10K 1W
16+32µ
450V
ECC83
10K 1W
[4K7 DR201]
220
K
220K
1000P
220
K
22n
35mV
47K
470
Ω
100µ
6.3V
220
K
47K
100K
LIN
22
n
470K
LOG
4700
P
220K
220K
LIN.
220
K
47n
TO
JACK
2K2
100µ
220
K
100K
1000
1M
PRESENCE
STAGE x3
FOR SIX
CHANNELS
TONE x6
VOLUME x6
IN PARALLEL
1M
HIWATT
JULY 1979
DR.
TO AP. AMPS
DRIVE CCT
V3.
MASTER
VOLUME
100K LIN

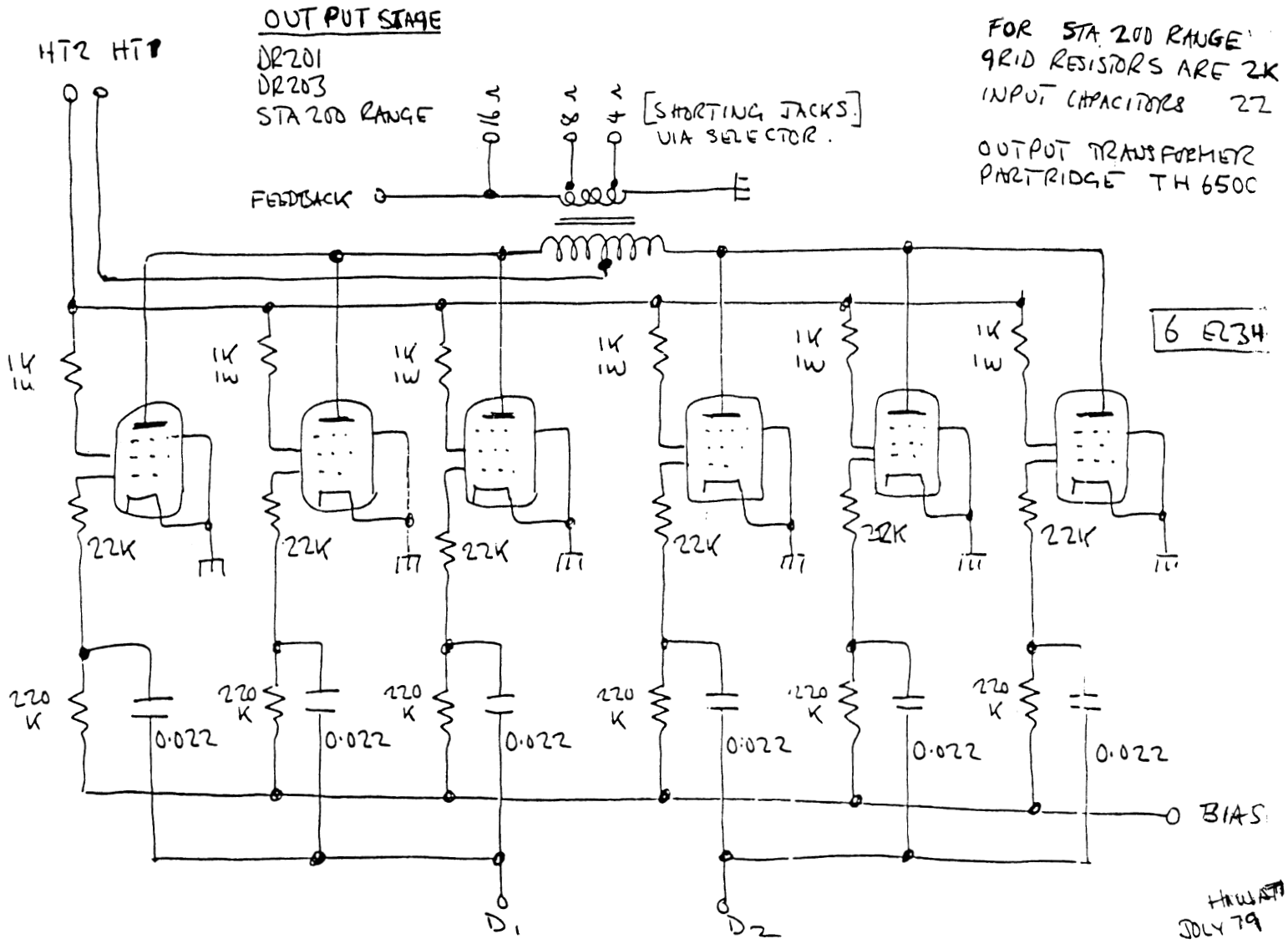
OUTPUT STAGE
DR201
DR203
STA 200 RANGE
HT2 HT1
16Ω
8Ω
4Ω
[SHORTING JACKS]
VIA SELECTOR.
FEEDBACK
FOR STA 200 RANGE:
GRID RESISTORS ARE 2K
INPUT CAPACITORS 22
OUTPUT TRANSFORMER
PARTRIDGE TH 650C
6 EL34
1K 1W
22K
220 K
0.022
BIAS
D1
D2
HIWATT
JULY 79

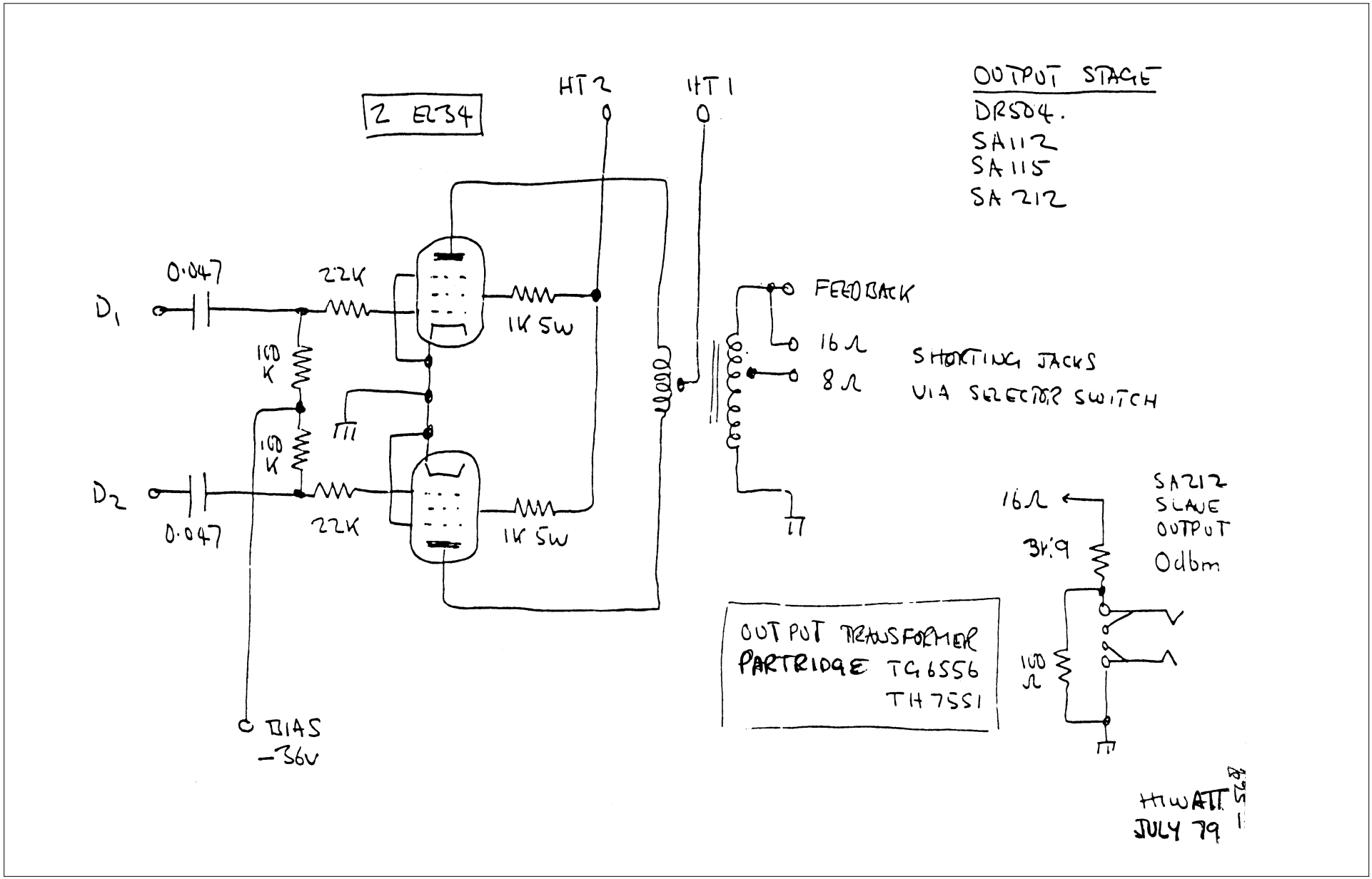
OUTPUT STAGE
DR504.
SA112
SA115
SA212
2 EL34
HT2
HT1
0·047
22K
1K 5W
100 K
100 K
D1
D2
0·047
22K
1K 5W
FEEDBACK
16Ω
8Ω
SHORTING JACKS
VIA SELECTOR SWITCH
16Ω
3K·9
SA212
SLAVE
OUTPUT
0dbm
100 Ω
OUTPUT TRANSFORMER
PARTRIDGE TG6556
TH7551
BIAS
-36V
HIWATT
JULY 79

DR **PREAMP STAGE**

Hiwatt

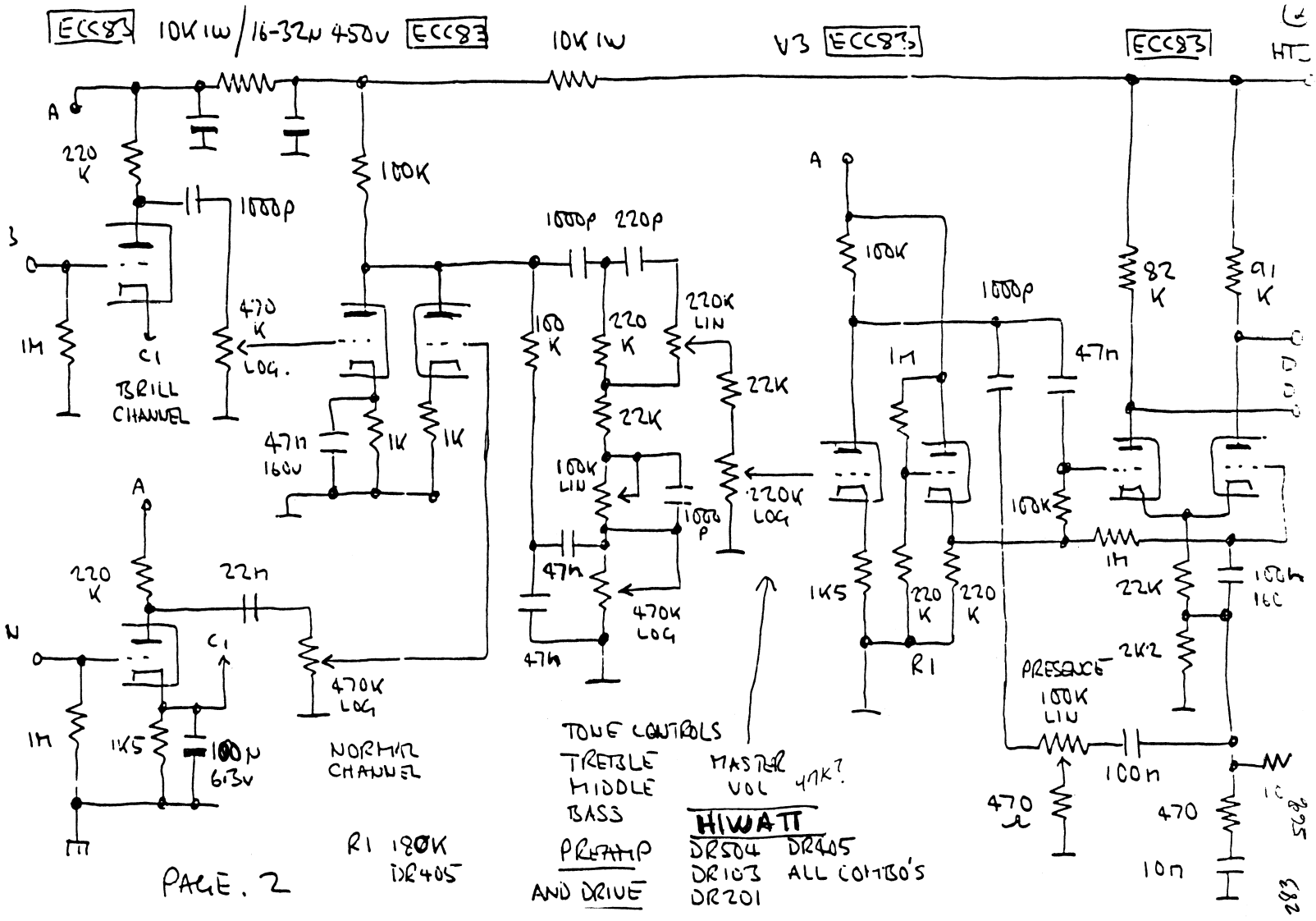

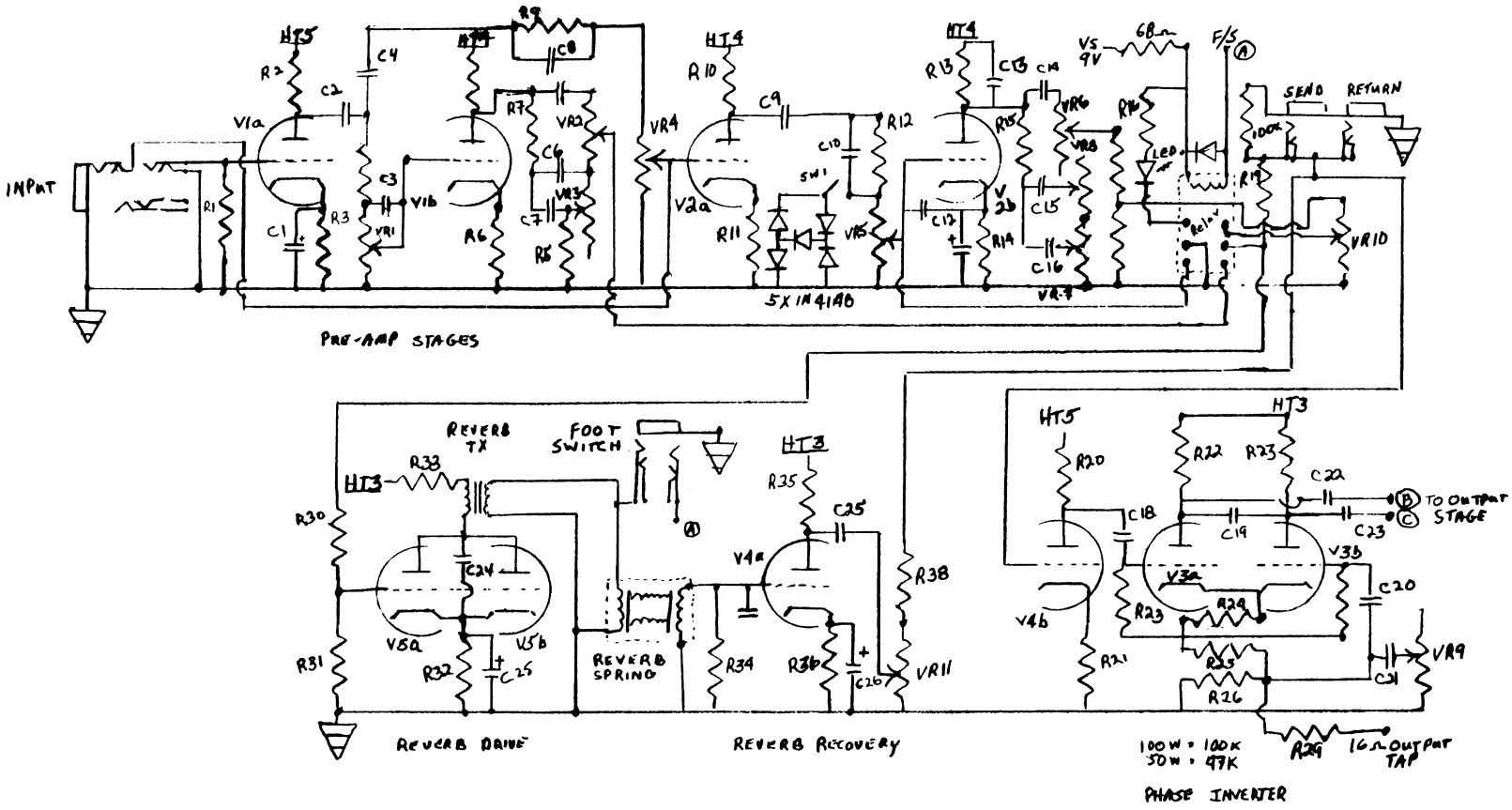

HIWATT® L100R & L50R SCHEMATICS	PRE-AMP, REVERB AND PHASE INVERTER STAGES	DRAWN O.J.R	TRACED O.J.R	CHECKED O.J.R	APPROVED A P	DATE 4-25-89	SCALE NA
		DWG # 101					

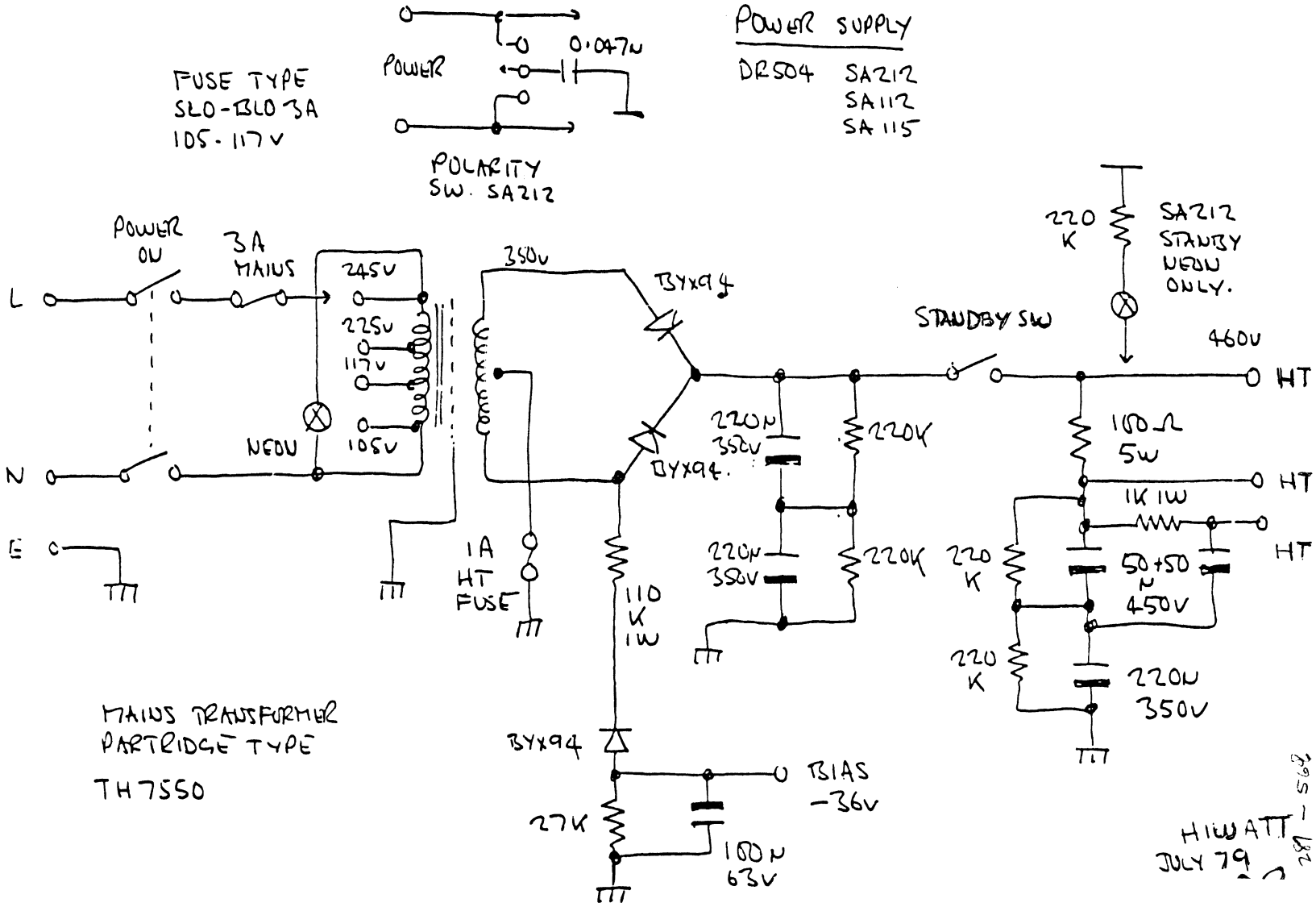
POWER SUPPLY
DR504 SA212
SA112
SA115
FUSE TYPE
SLO-BLO 3A
105-117V
POWER
0.047u
POLARITY
SW. SA212
POWER
ON
3A
MAINS
245V
225V
117V
105V
NEON
L
N
E
350V
BYX94
BYX94.
220
K
SA212
STANDBY
NEON
ONLY.
STANDBY SW
460V
HT
220N
350V
220K
180Ω
5W
HT
1K 1W
HT
220N
350V
220K
220
K
50+50
450V
HT
220
K
220N
350V
1A
HT
FUSE
110
K
1W
MAINS TRANSFORMER
PARTRIDGE TYPE
TH7550
BYX94
BIAS
-36V
27K
180N
63V
HIWATT
JULY 79

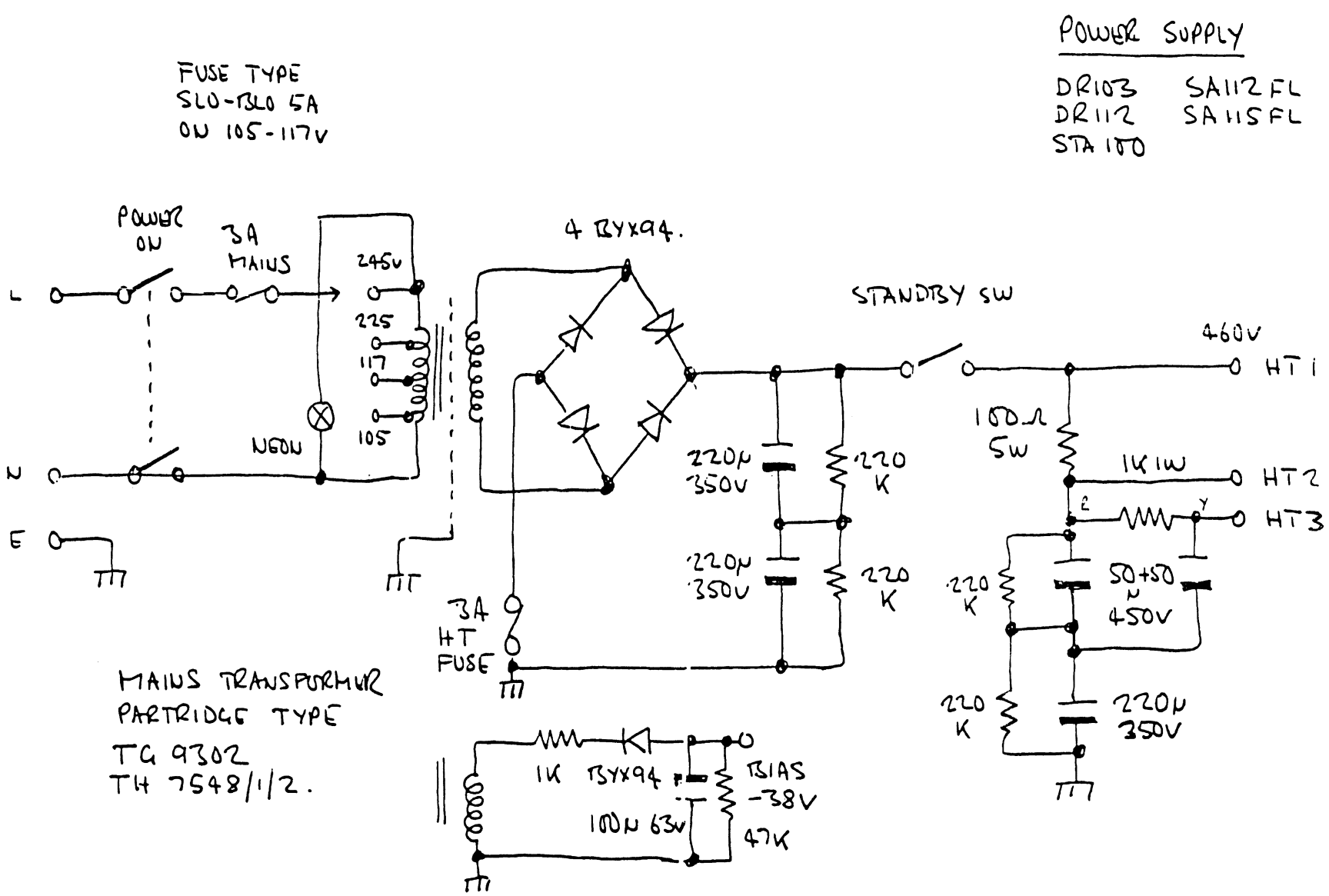
POWER SUPPLY
DR103 SA112FL
DR112 SA115FL
STA 100
FUSE TYPE
SLO-BLO 5A
ON 105-117V
POWER ON
3A MAINS
L
N
E
NEON
245V
225
117
105
4 BYX94.
STANDBY SW
460V
HT1
100Ω 5W
1K 1W
HT2
HT3
220µ 350V
220 K
220µ 350V
220 K
220 K
50+50 µ 450V
220 K
220µ 350V
3A HT FUSE
MAINS TRANSFORMER
PARTRIDGE TYPE
TG 9302
TH 7548/1/2.
1K
BYX94
100µ 63V
BIAS -38V
47K

POWER SUPPLY **150w**

Hiwatt

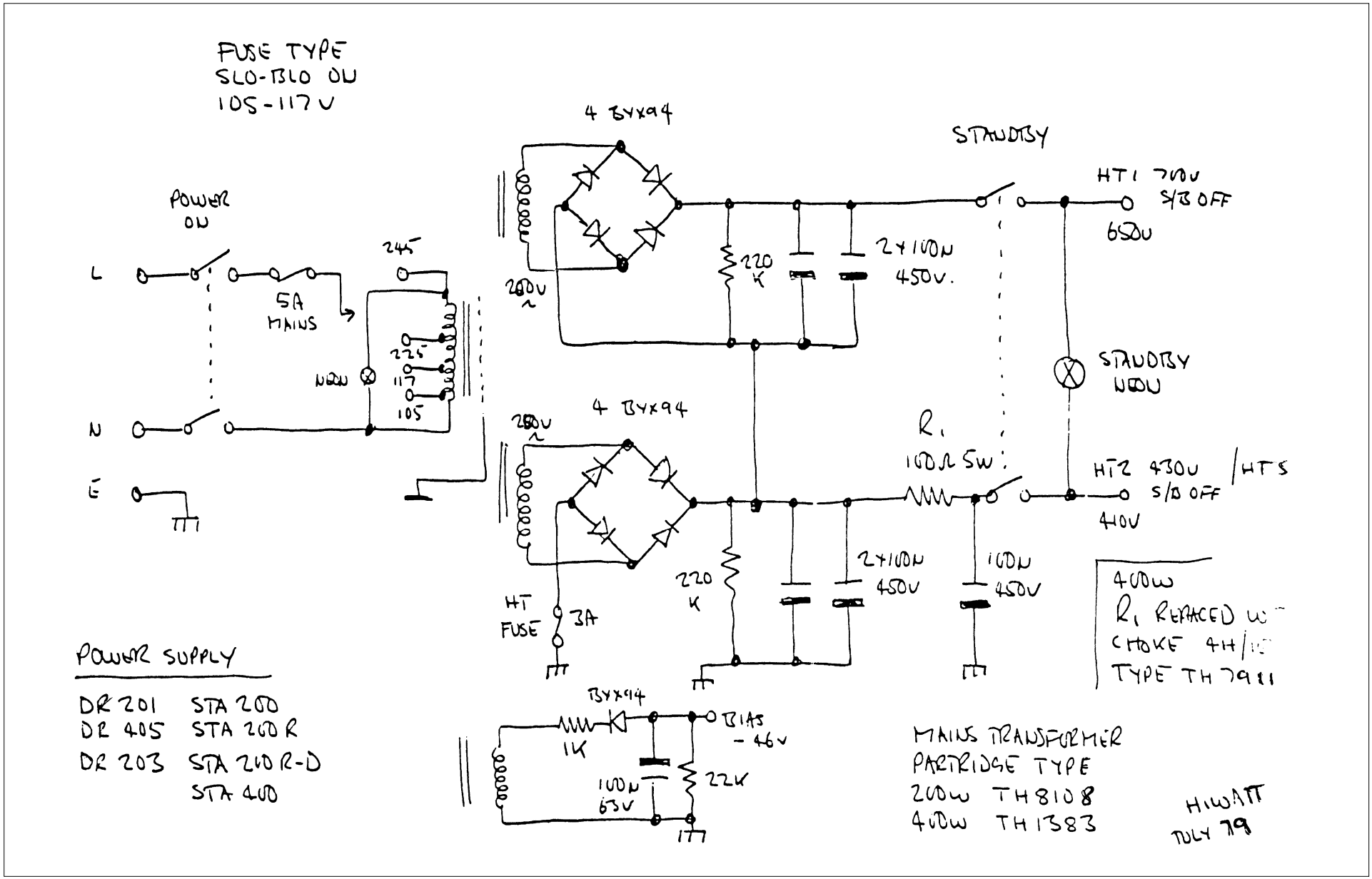

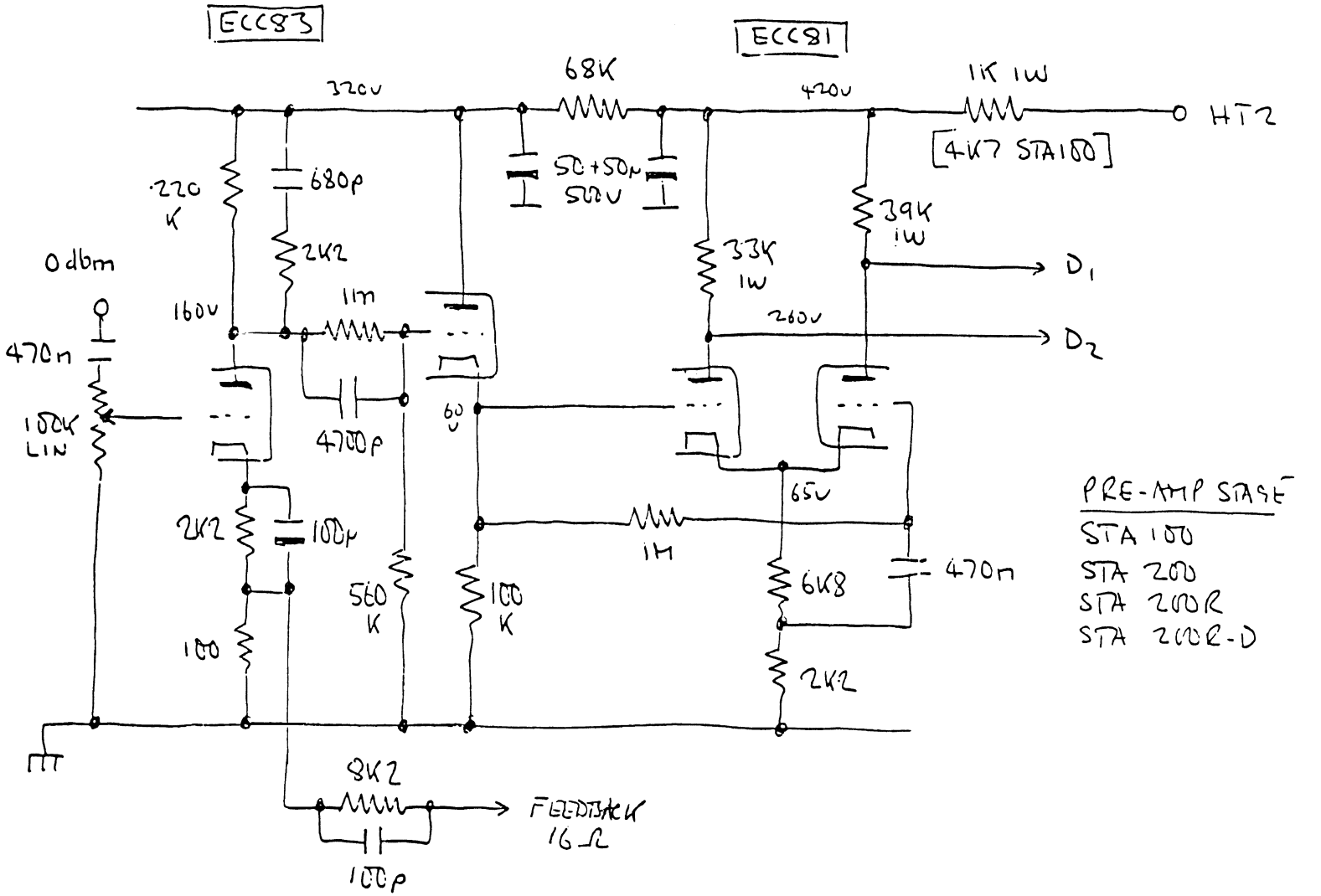

PRE-AMP STAGE

STA 100
STA 200
STA 200R
STA 200R-D

HIWATT
JULY 79 DR

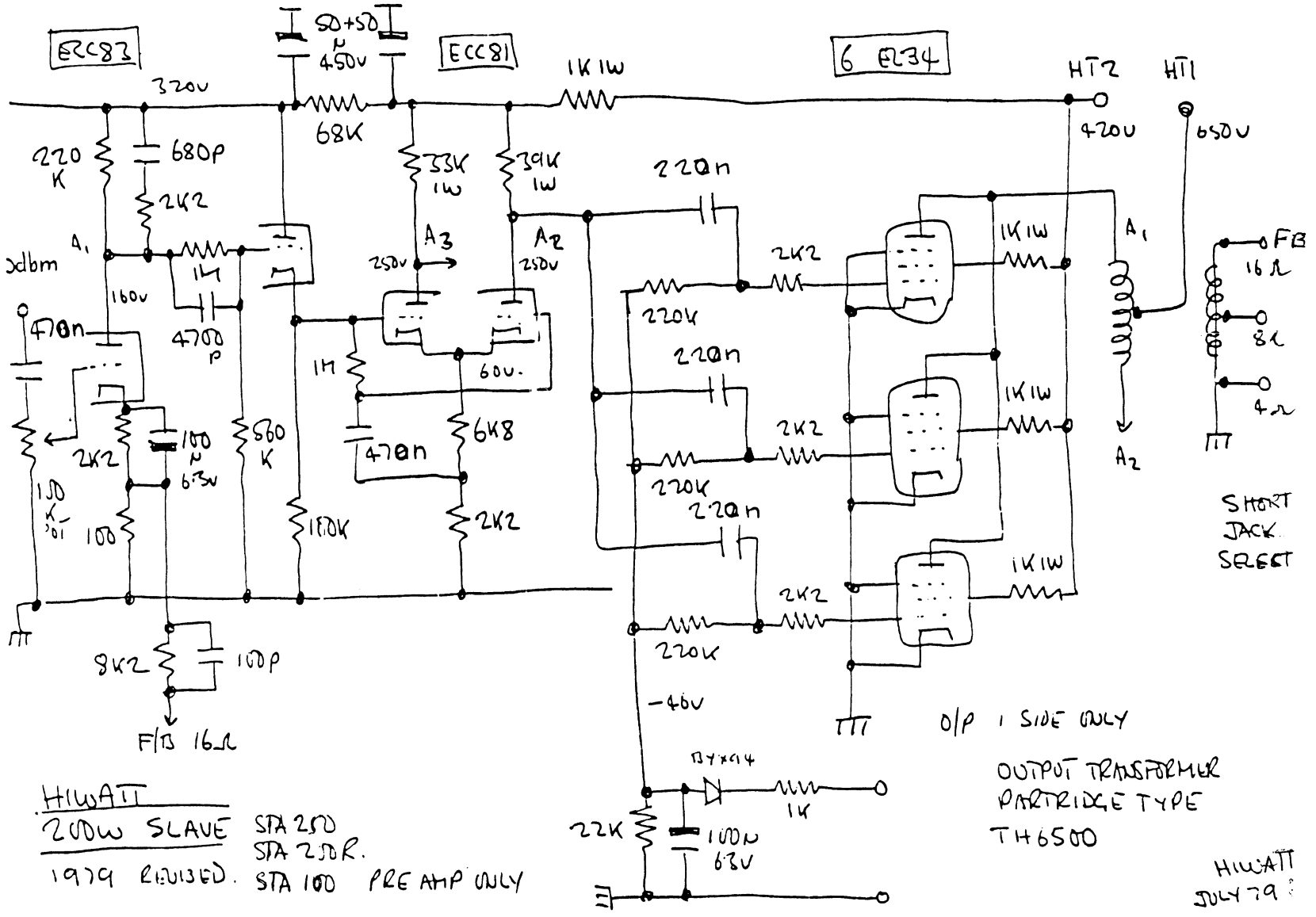
ECC83
320V
50+50 µ 450V
ECC81
1K 1W
6 EL34
HT2
HT1
420V
650V
68K
220 K
680P
2K2
33K 1W
39K 1W
220n
A1
0dbm
160V
1M
4700 P
250V
A3
A2
250V
2K2
220K
1K 1W
FB 16Ω
8Ω
4Ω
470n
1M
60V.
470n
6K8
100 µ 6.3V
560 K
2K2
100 K
100
180K
2K2
SHORT JACK SELECT
8K2
100P
F/B 16Ω
-46V
BY×914
1K
22K
100N 63V
O/P 1 SIDE ONLY
OUTPUT TRANSFORMER PARTRIDGE TYPE TH6500
HIWATT
200W SLAVE
STA 250
STA 250R.
1979 REVISED.
STA 100 PRE AMP ONLY
HIWATT JULY 79

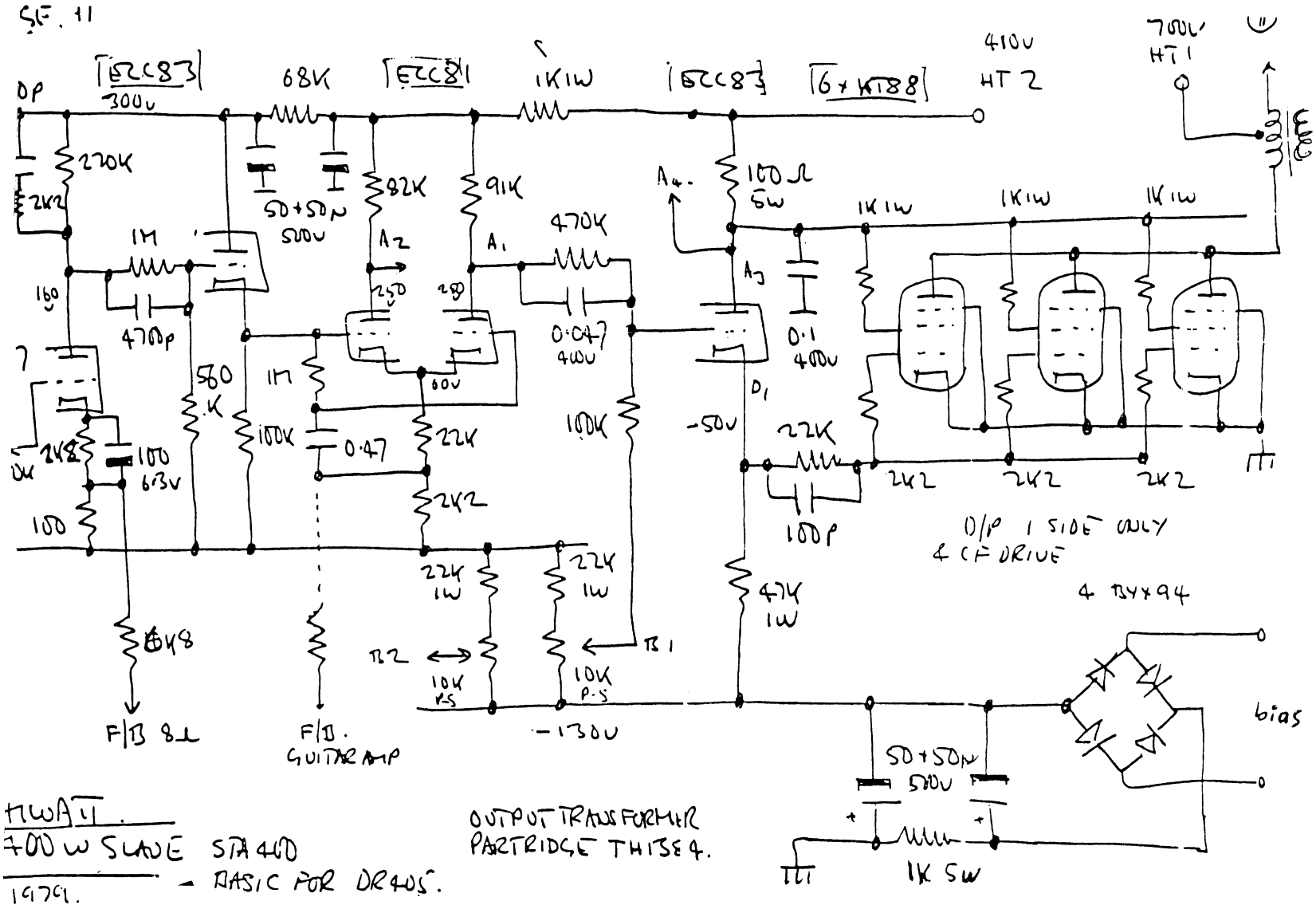
SE. 11
ECC83
300V
68K
ECC81
1K1W
ECC83
6 x KT88
410V
HT 2
700V
HT 1
OP
270K
2K2
1M
470pF
160
560 K
100K
0.47
22K
2K2
100
63V
100
1K8
F/B 8Ω
F/B.
GUITAR AMP
50+50µ
500V
82K
91K
A2
A1
250
280
60V
470K
0.047
400V
100K
B2
10K
P.S
B1
-130V
A4
100Ω
5W
A3
0.1
400V
D1
-50V
22K
100P
47K
1W
1K1W
2K2
O/P 1 SIDE ONLY
& CF DRIVE
4 BY x 94
bias
50+50µ
500V
1K 5W
HIWATT.
700 W SLAVE STA 400
1979.
BASIC FOR DR401.
OUTPUT TRANSFORMER
PARTRIDGE THISE4.

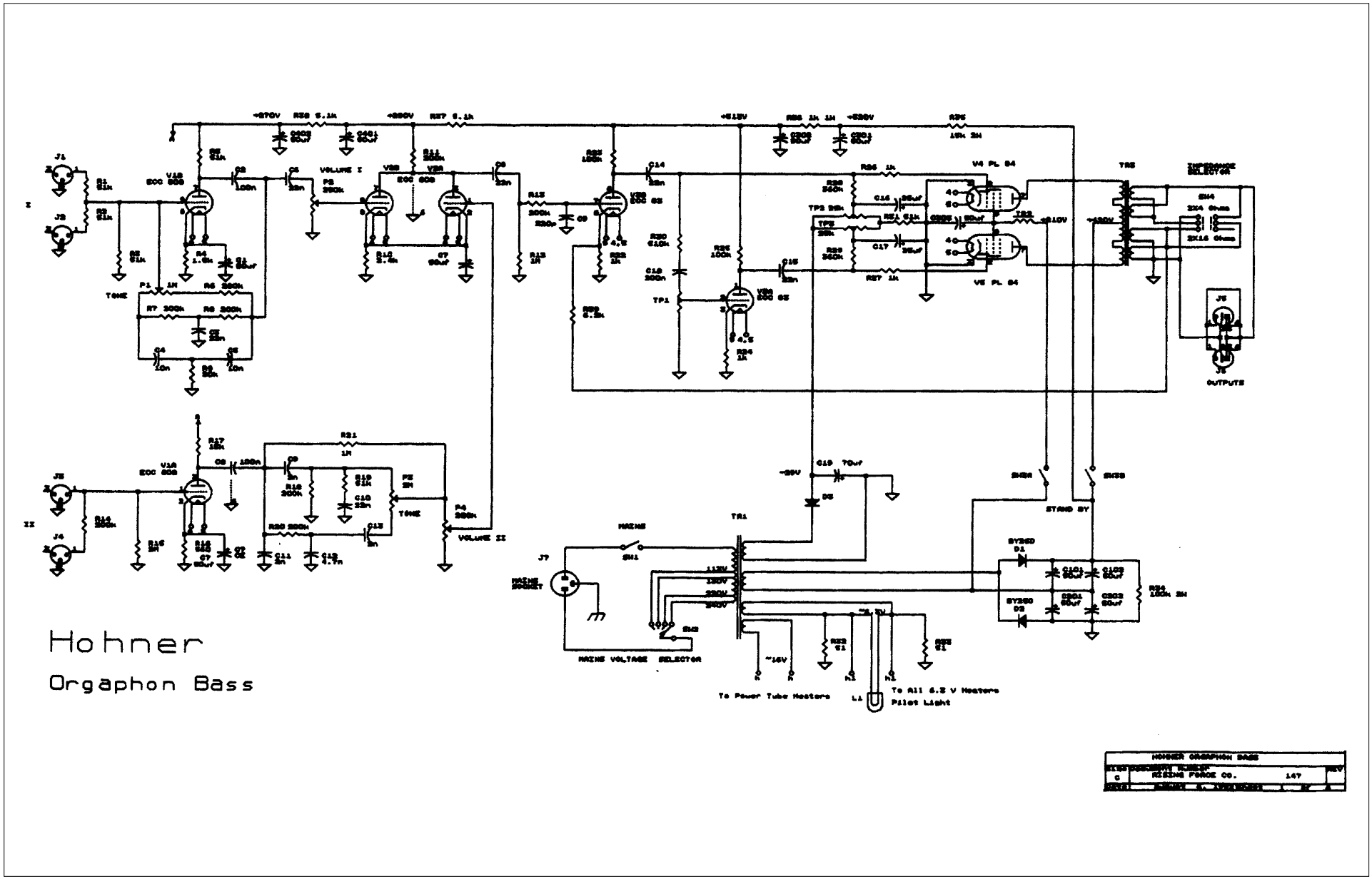
Hohner
Orgaphon Bass
TONE
VOLUME I
VOLUME II
OUTPUTS
STAND BY
MAINS
MAINS SOCKET
MAINS VOLTAGE SELECTOR
To Power Tube Heaters
To All 6.3 V Heaters
Pilot Light
HOHNER ORGAPHON BASS
RESING PRACE CO.

ADVANCED TUBE BASS PRE AMP

Juergen Simon

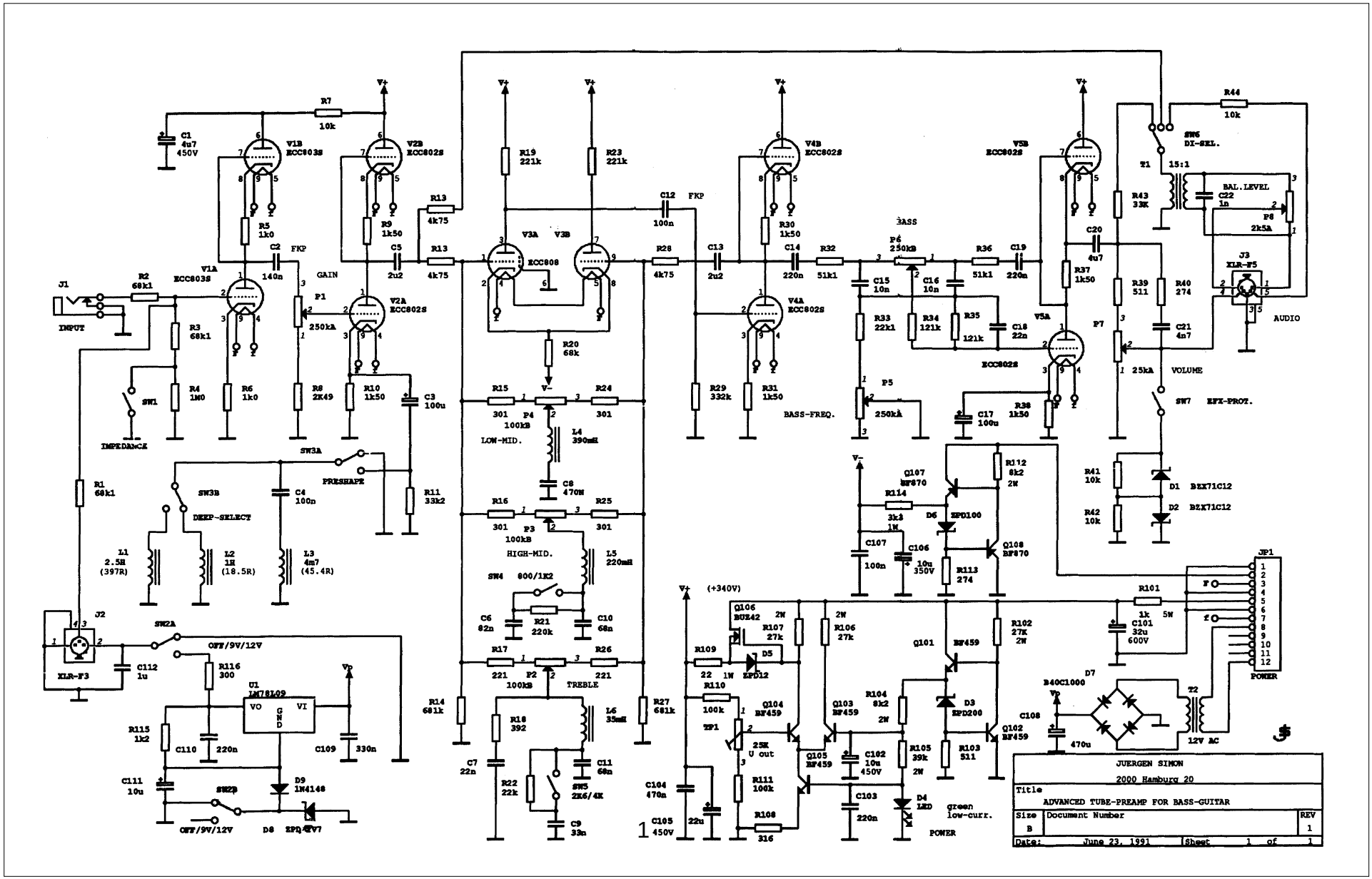

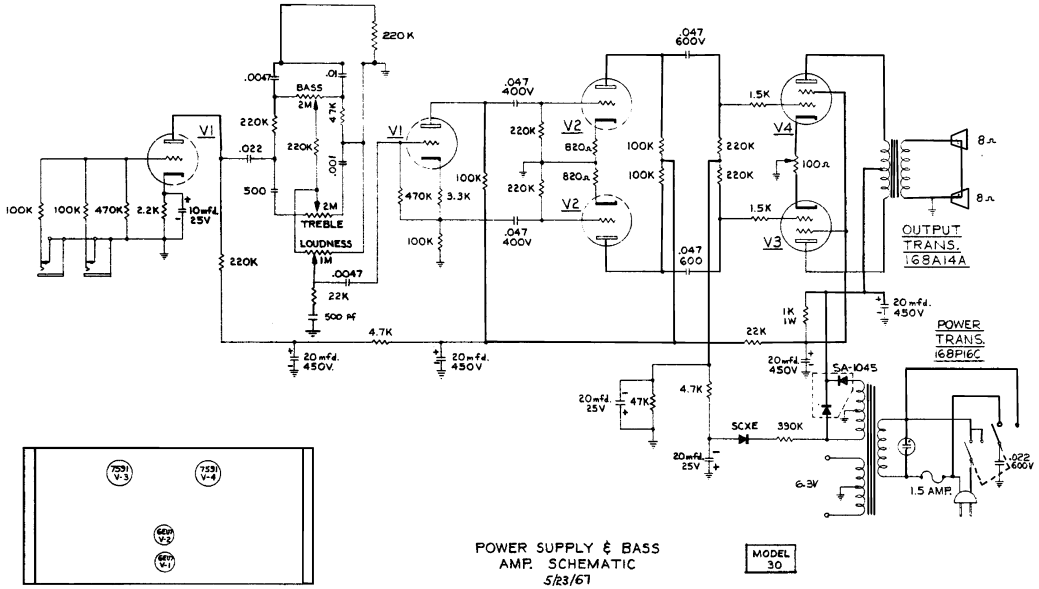

TUBE LOCATION CHART
KALAMAZOO BASS AMP.

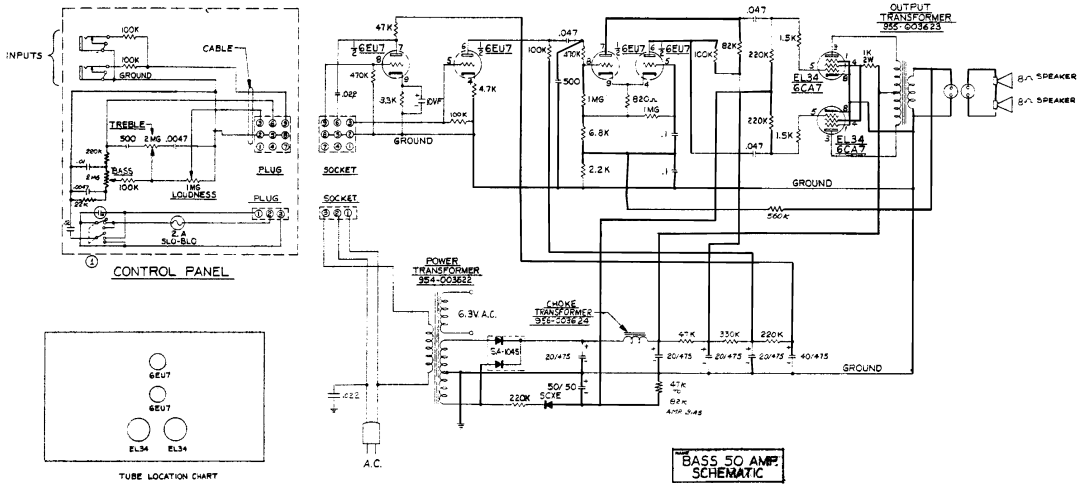

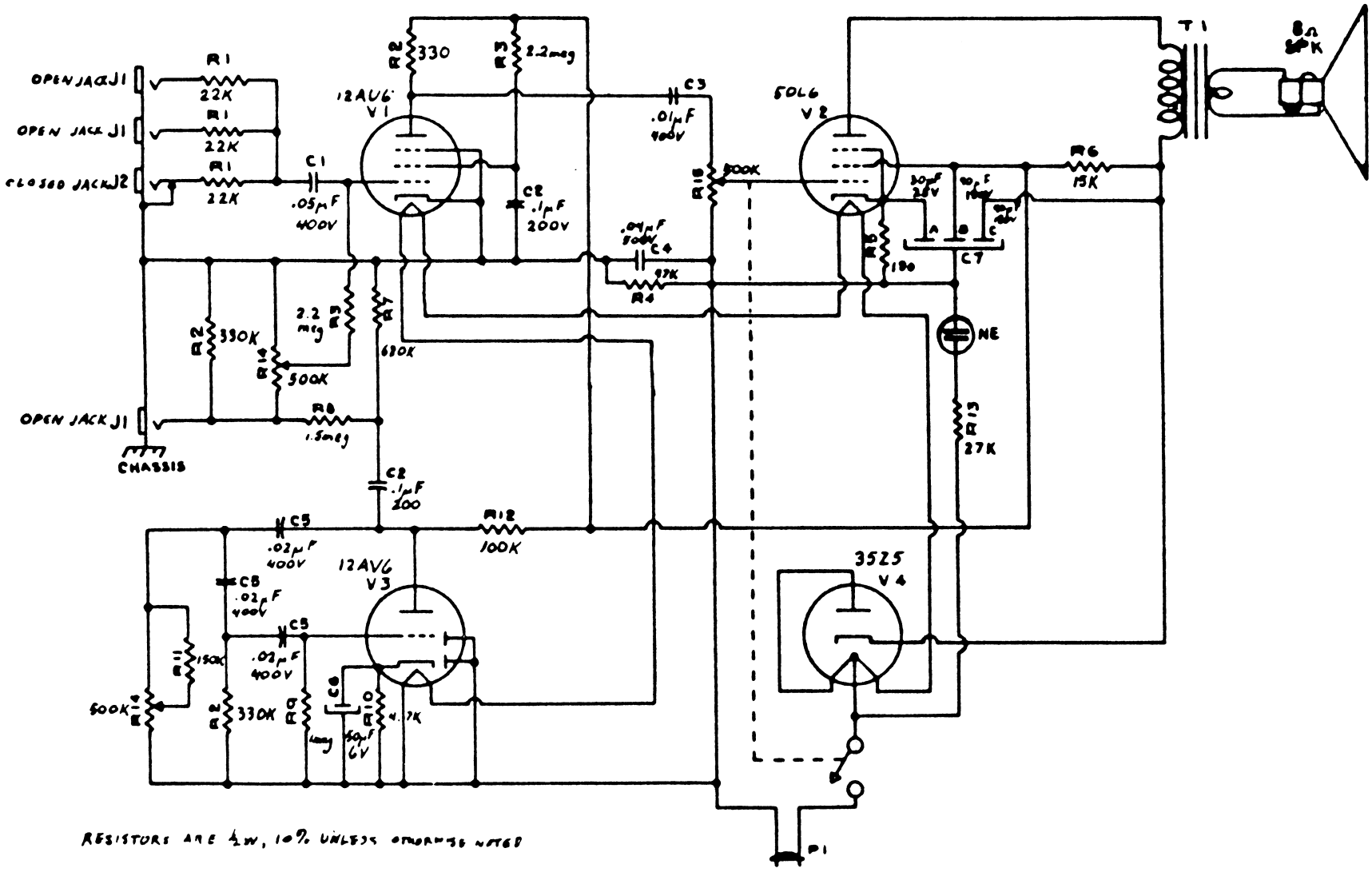

RESISTORS ARE ½W, 10% UNLESS OTHERWISE NOTED

Kay Model 500

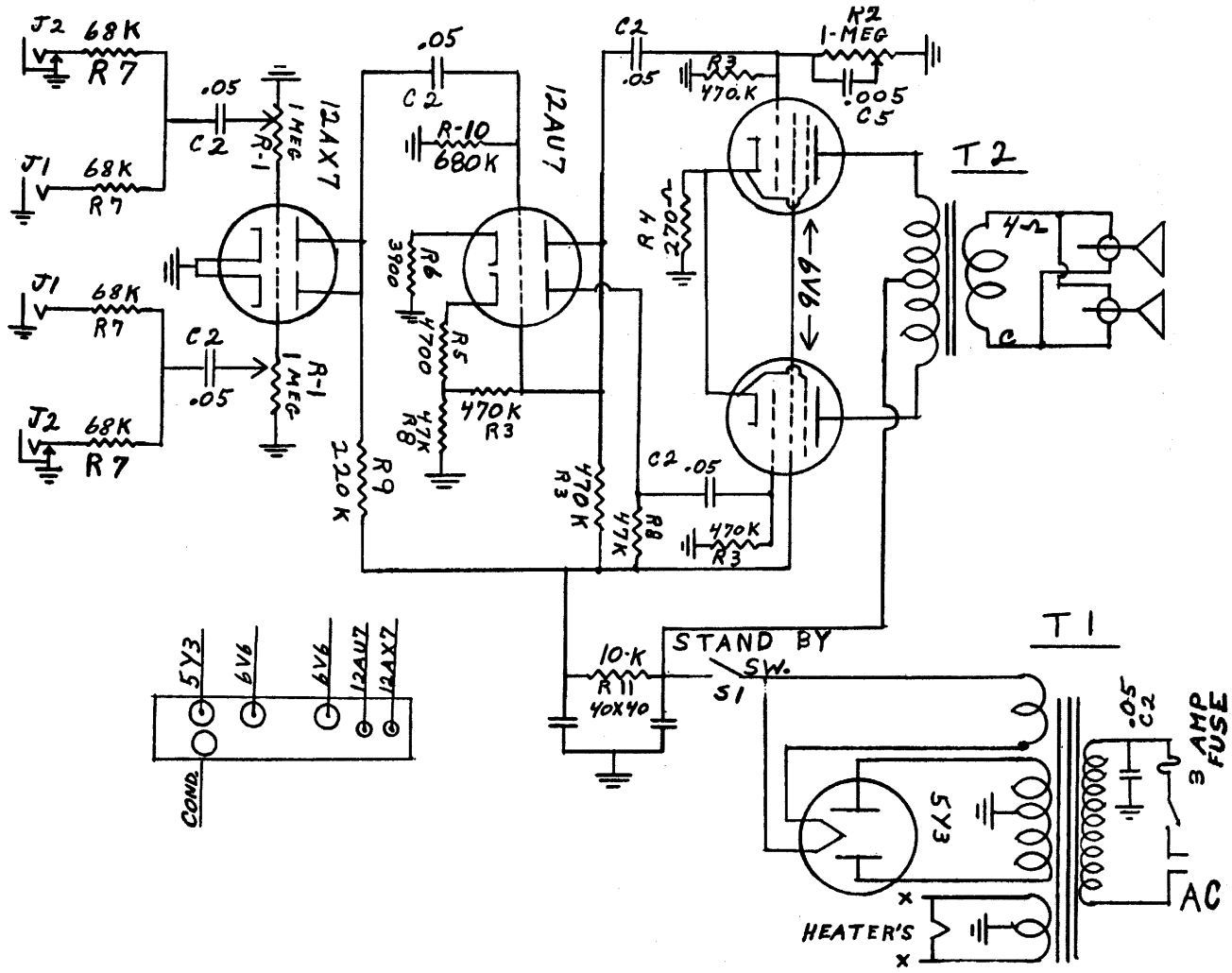

Kay Model K505

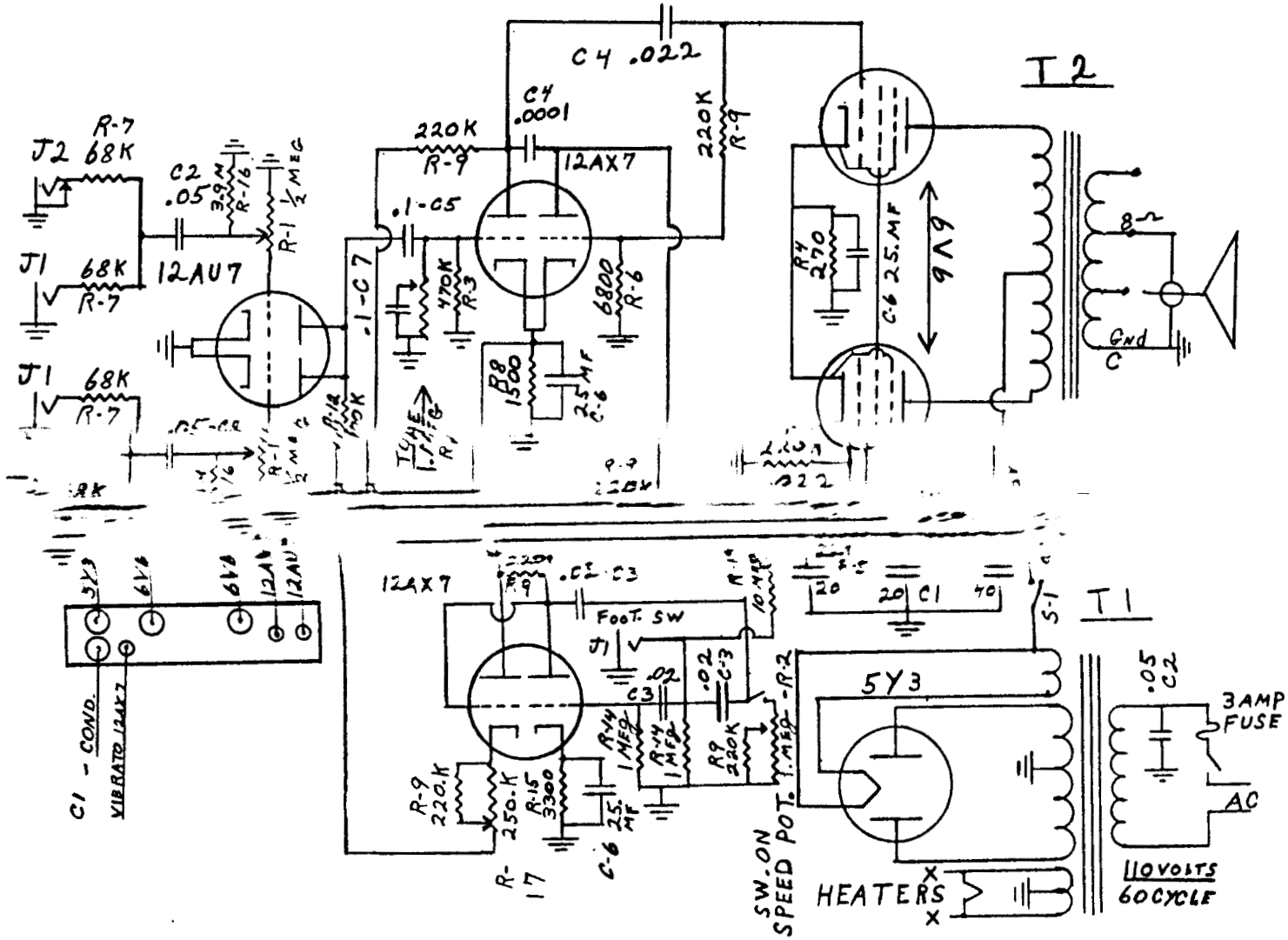

Kay Model 506

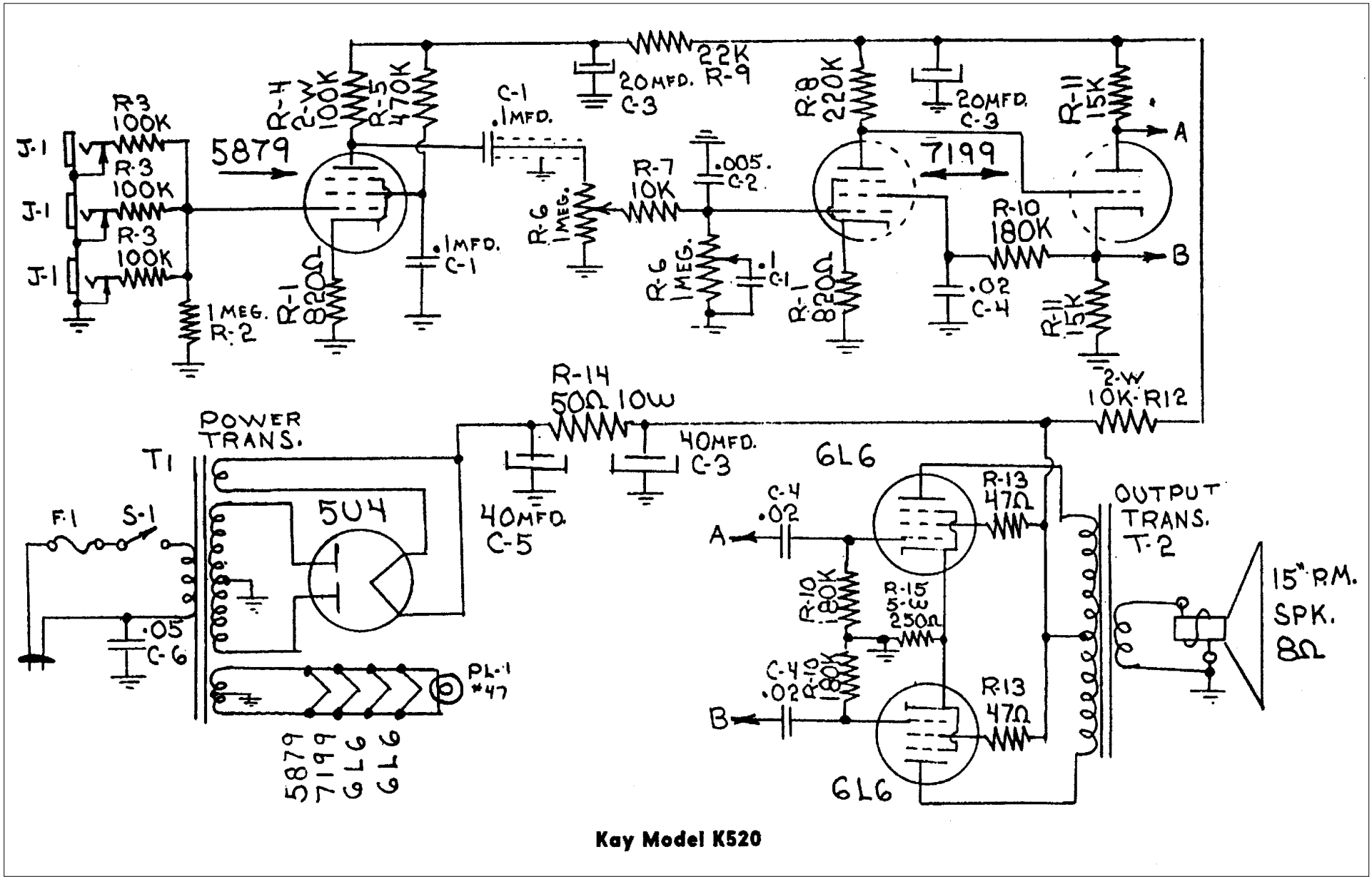

Kay Model K520

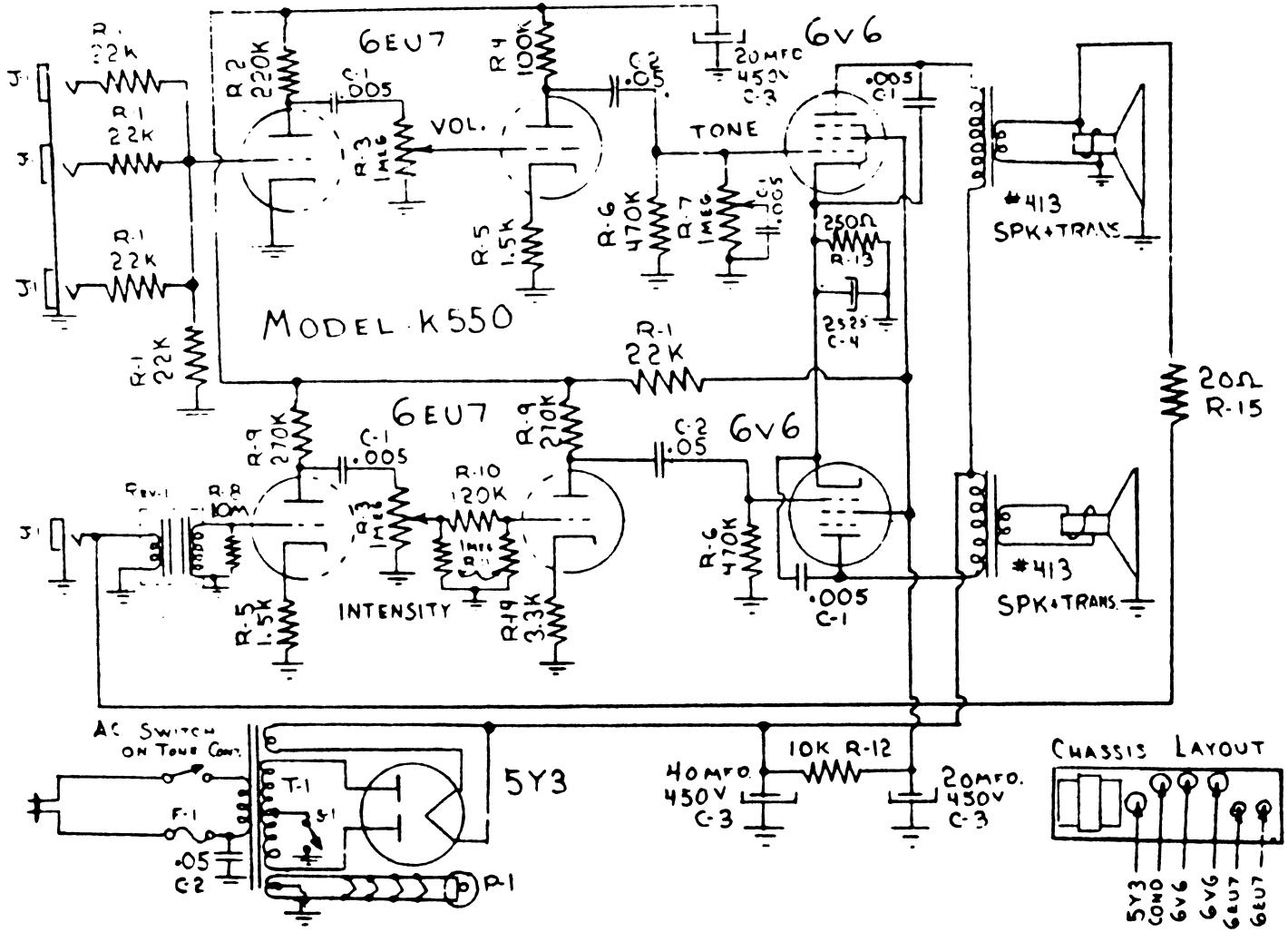

Kay Model K550

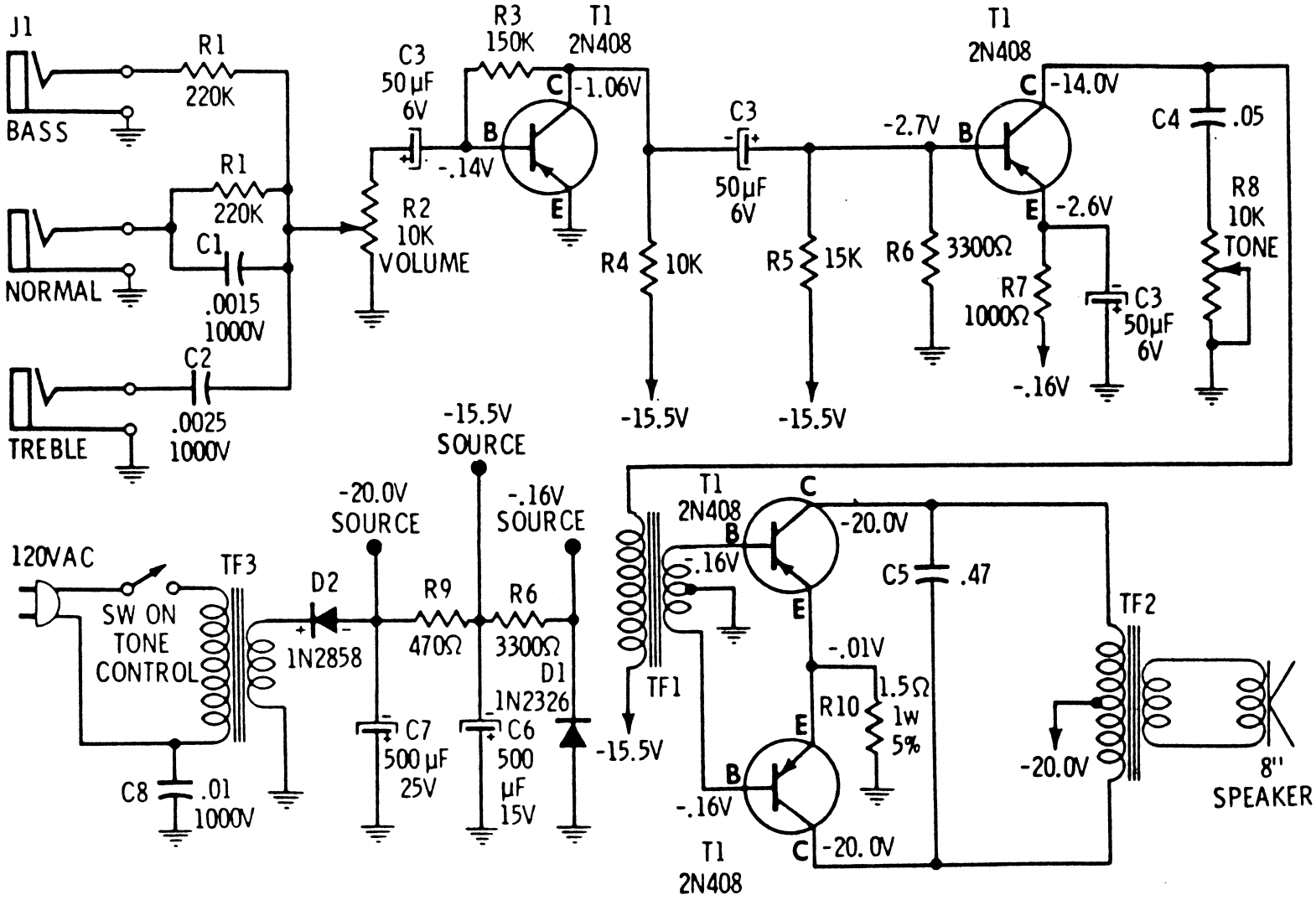

Kay Model 700

Small and Medium Amplifiers

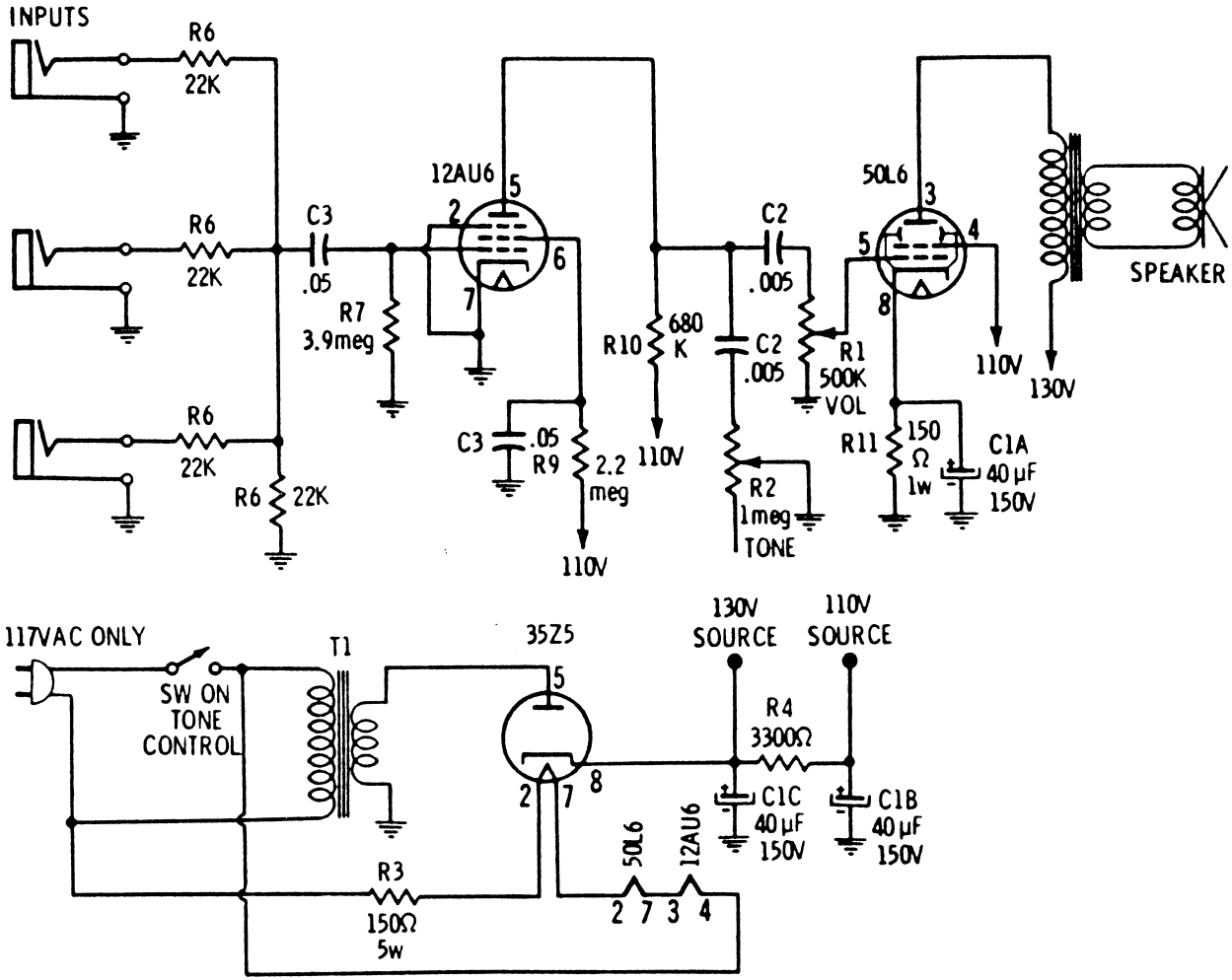

Kay Model 703

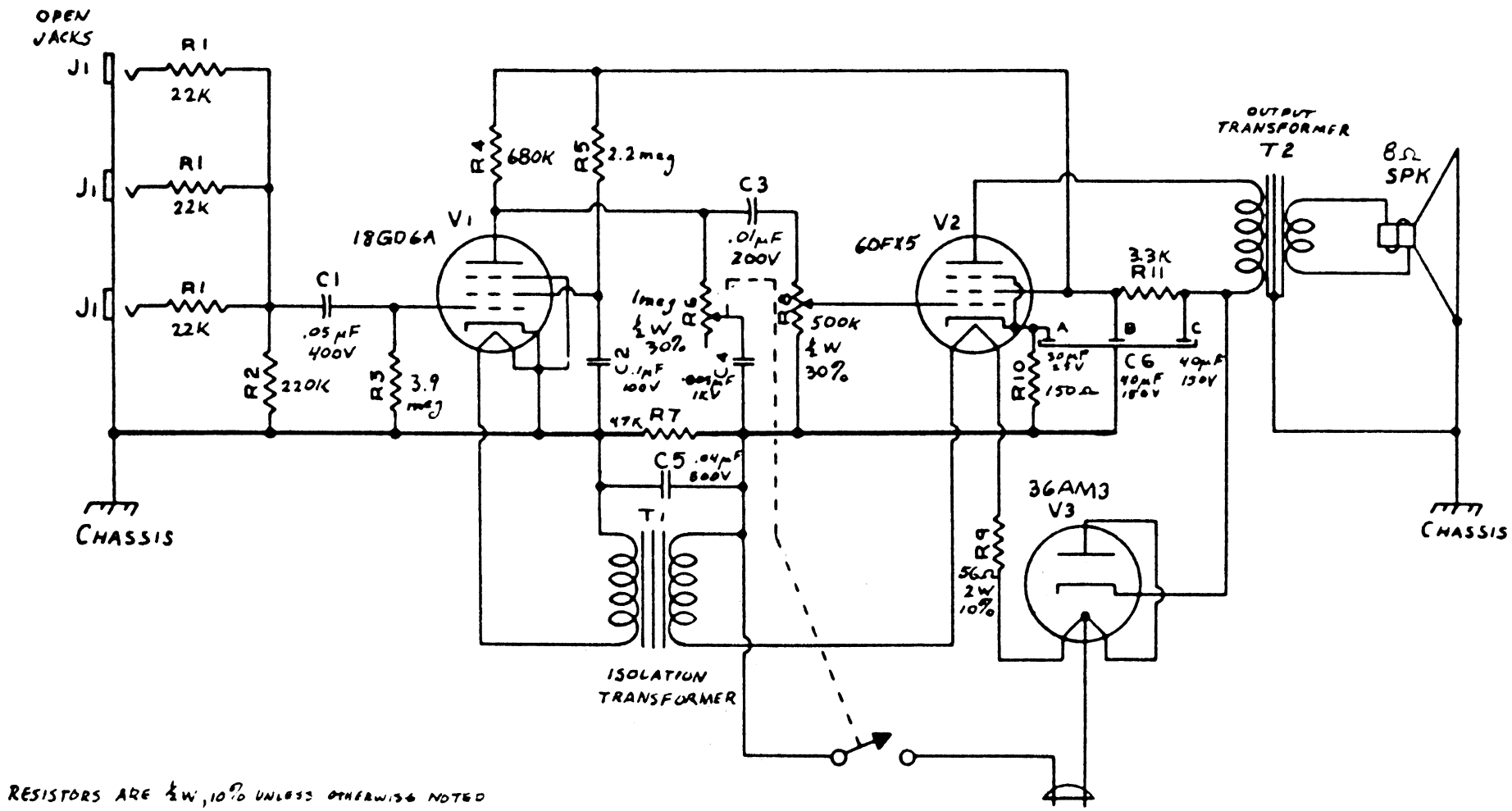

RESISTORS ARE ½W, 10% UNLESS OTHERWISE NOTED

Kay Model 703-C

Small and Medium Amplifiers

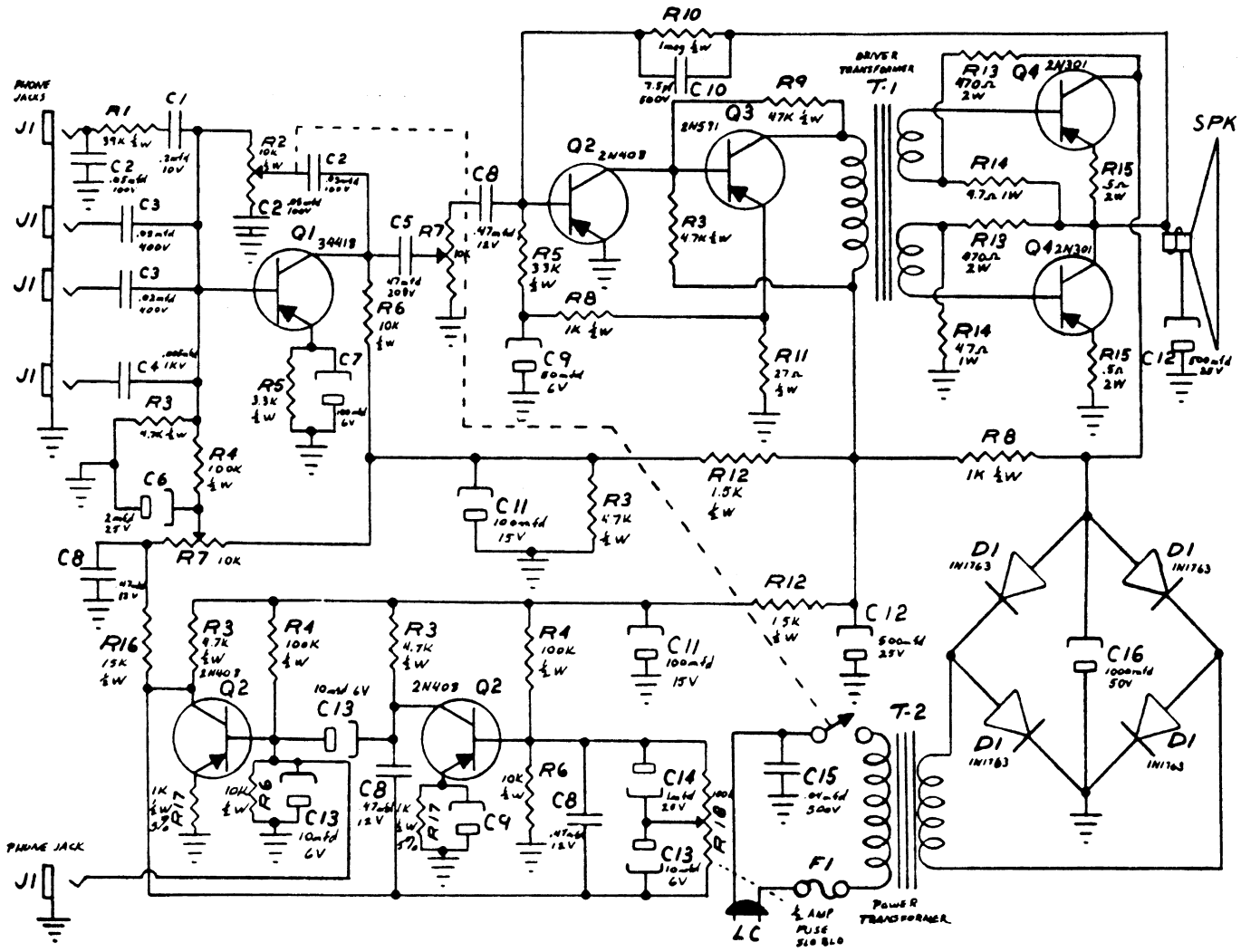

Kay Model 805

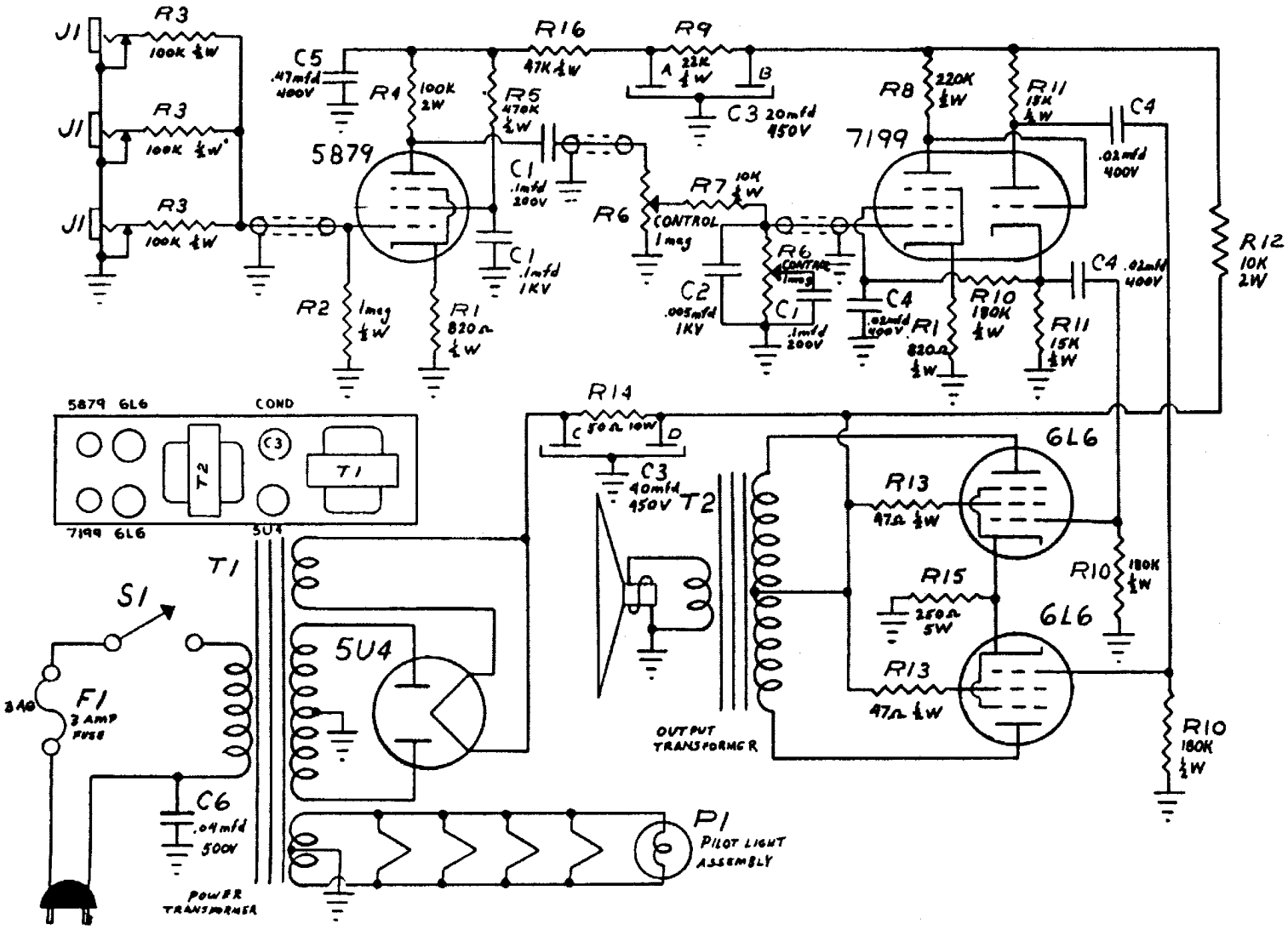

Kay Model 820

High-Power Amplifiers

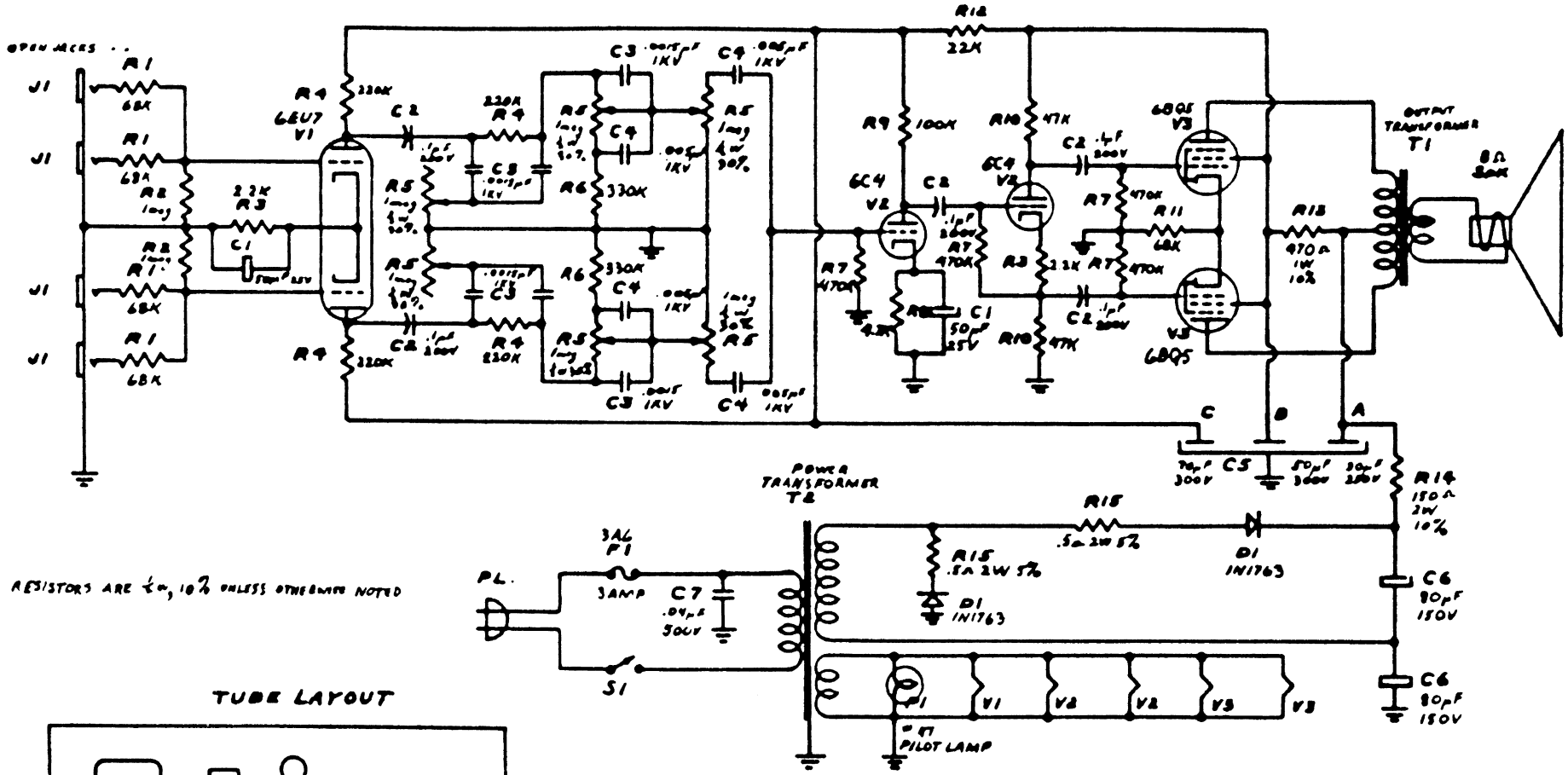

RESISTORS ARE ½W, 10% UNLESS OTHERWISE NOTED

TUBE LAYOUT

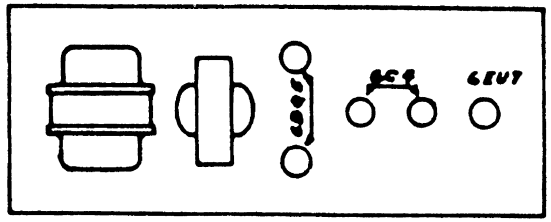

Key Model 830

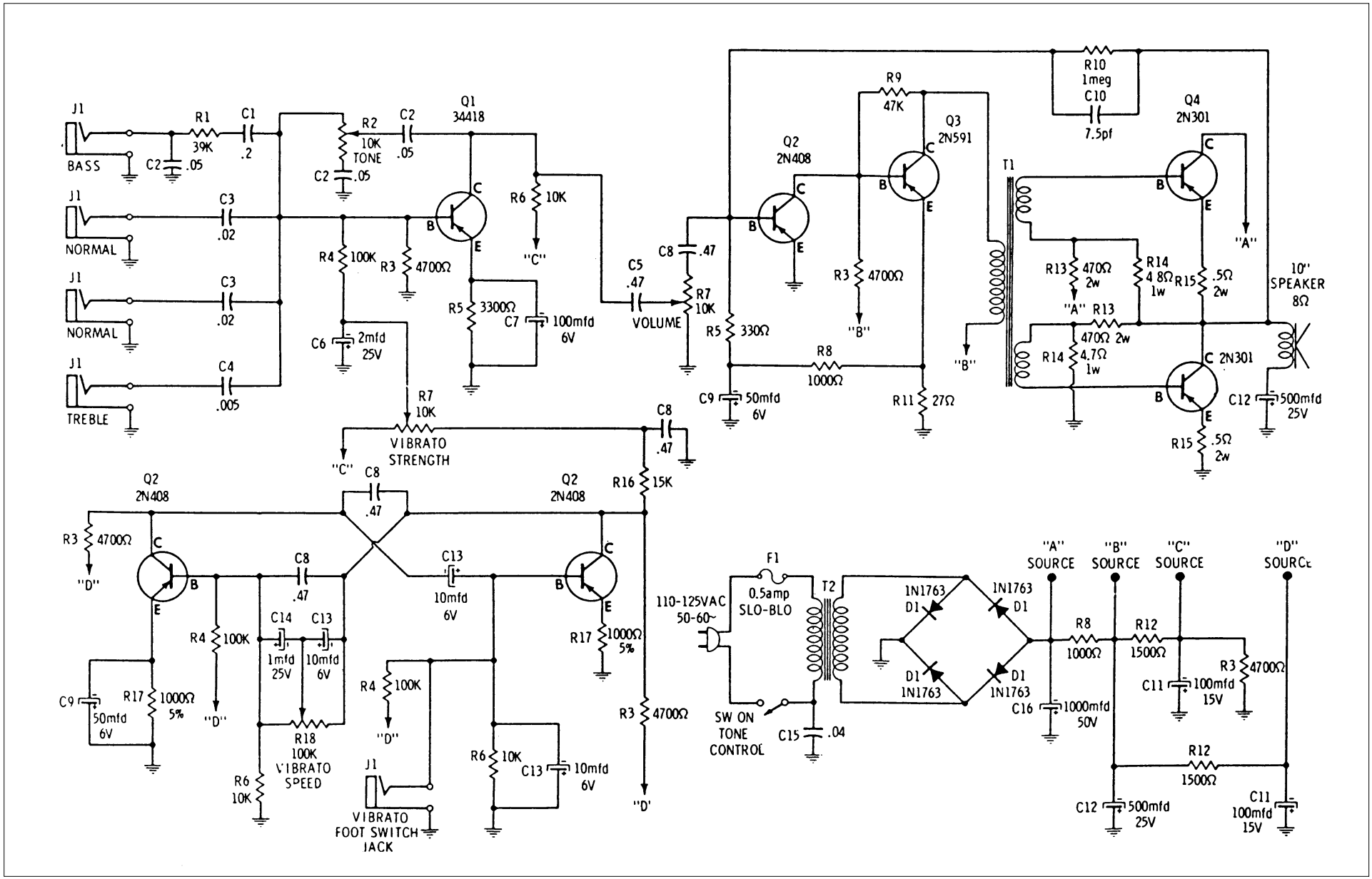
J1
BASS
R1
39K
C1
.2
C2
.05
R2
10K
TONE
C2
.05
C2
.05
Q1
34418
J1
NORMAL
C3
.02
J1
NORMAL
C3
.02
J1
TREBLE
C4
.005
R4
100K
R3
4700Ω
C6
2mfd
25V
R5
3300Ω
C7
100mfd
6V
R6
10K
"C"
C5
.47
VOLUME
C8
.47
R7
10K
R5
330Ω
C9
50mfd
6V
R9
47K
Q2
2N408
Q3
2N591
R3
4700Ω
"B"
R8
1000Ω
R11
27Ω
R10
1meg
C10
7.5pf
Q4
2N301
T1
"A"
R13
470Ω
2w
R14
4.8Ω
1w
R15
.5Ω
2w
10"
SPEAKER
8Ω
"A"
R13
470Ω 2w
R14
4.7Ω
1w
2N301
C12
500mfd
25V
R15
.5Ω
2w
R7
10K
VIBRATO
STRENGTH
"C"
C8
.47
Q2
2N408
R16
15K
R3
4700Ω
"D"
C8
.47
C13
10mfd
6V
C14
1mfd
25V
C13
10mfd
6V
R4
100K
R17
1000Ω
5%
C9
50mfd
6V
R17
1000Ω
5%
"D"
R18
100K
VIBRATO
SPEED
R6
10K
R4
100K
"D"
J1
VIBRATO
FOOT SWITCH
JACK
R6
10K
C13
10mfd
6V
R3
4700Ω
"D"
F1
0.5amp
SLO-BLO
110-125VAC
50-60~
SW ON
TONE
CONTROL
C15
.04
T2
1N1763
D1
"A"
SOURCE
"B"
SOURCE
"C"
SOURCE
"D"
SOURCE
R8
1000Ω
R12
1500Ω
R3
4700Ω
C11
100mfd
15V
C16
1000mfd
50V
R12
1500Ω
C12
500mfd
25V
C11
100mfd
15V

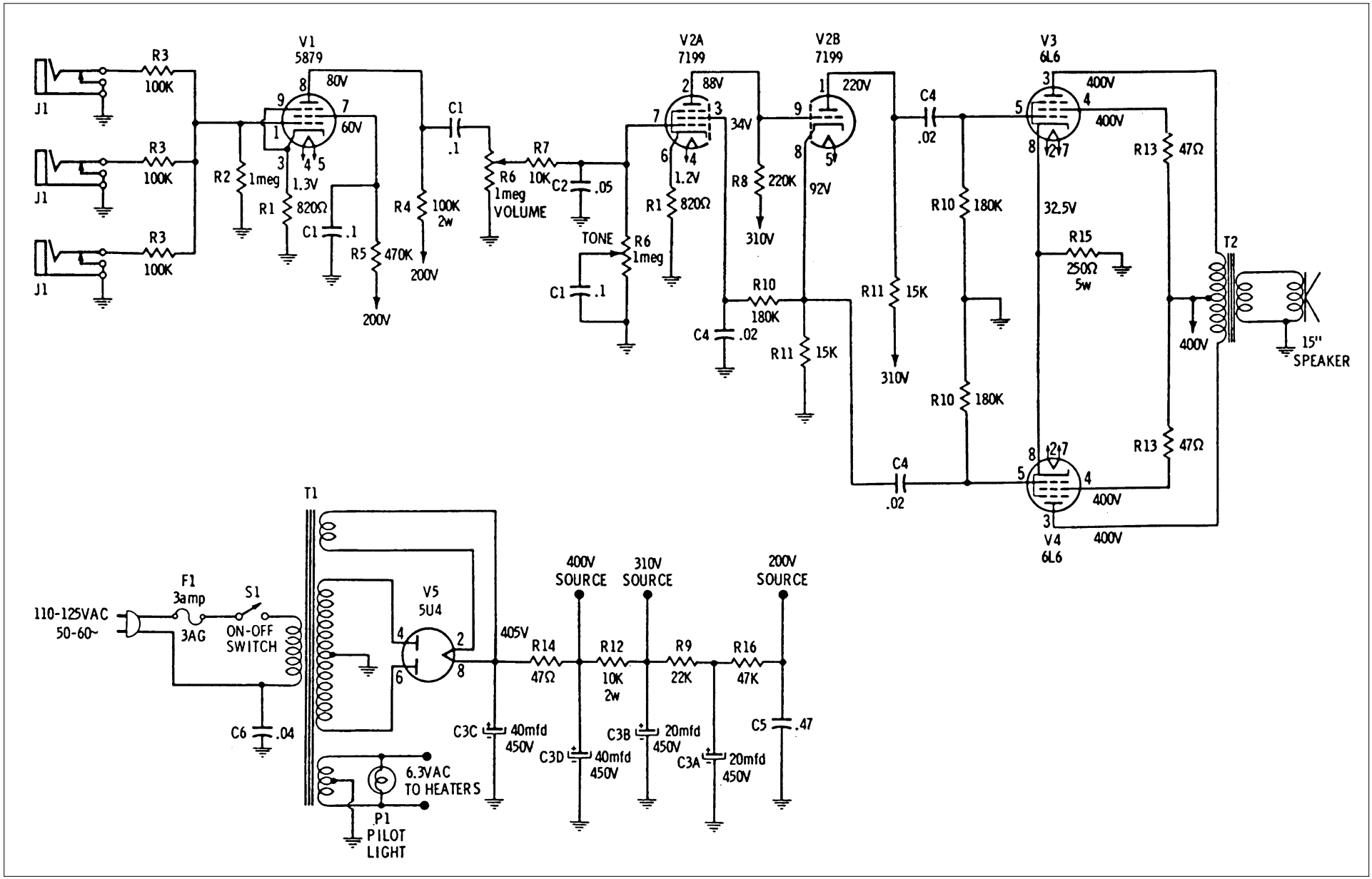
V1
5879
V2A
7199
V2B
7199
V3
6L6
V4
6L6
V5
5U4
T1
T2
J1
R3
100K
R2
1meg
R1
820Ω
C1
.1
R4
100K
2w
R5
470K
200V
80V
60V
1.3V
R6
1meg
VOLUME
R7
10K
C2
.05
TONE
R6
1meg
88V
34V
1.2V
R8
220K
310V
220V
92V
C4
.02
R10
180K
R11
15K
400V
32.5V
R15
250Ω
5w
R13
47Ω
15"
SPEAKER
F1
3amp
3AG
S1
ON-OFF
SWITCH
110-125VAC
50-60~
C6
.04
6.3VAC
TO HEATERS
P1
PILOT
LIGHT
405V
R14
47Ω
400V
SOURCE
R12
10K
2w
310V
SOURCE
R9
22K
R16
47K
200V
SOURCE
C3C
40mfd
450V
C3D
40mfd
450V
C3B
20mfd
450V
C3A
20mfd
450V
C5
.47

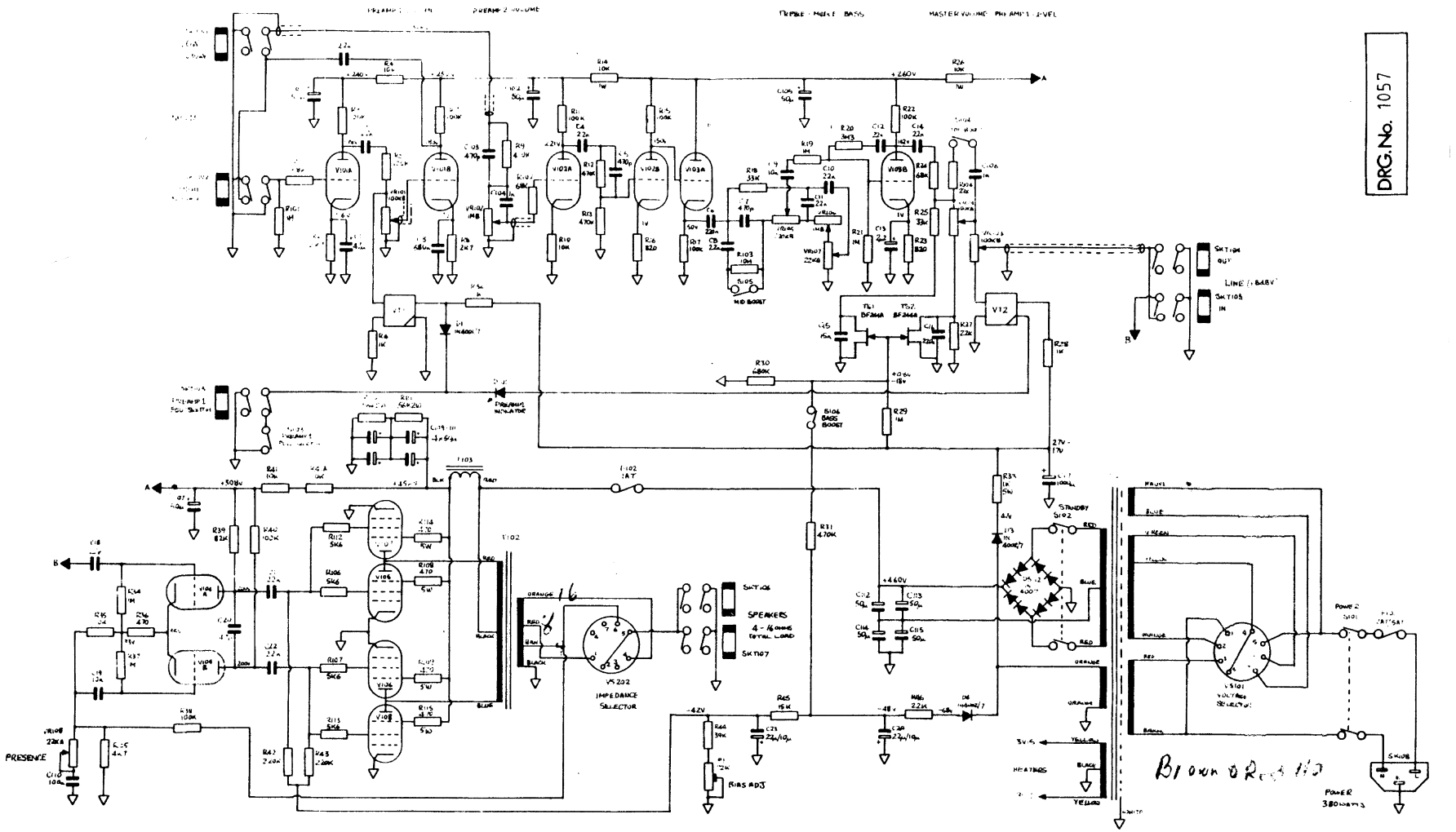

DESCRIPTION	APPD.	DATE		TITLE	DRAWN	TRACED	CHECKED	APPROVED	DATE
			LANEY AMPLIFICATION LTD	A100H CIRCUIT	DEH	DEH			1/3/84
					DRAWING No. 1057				

ROTATING SPEAKER CABINET

Leslie

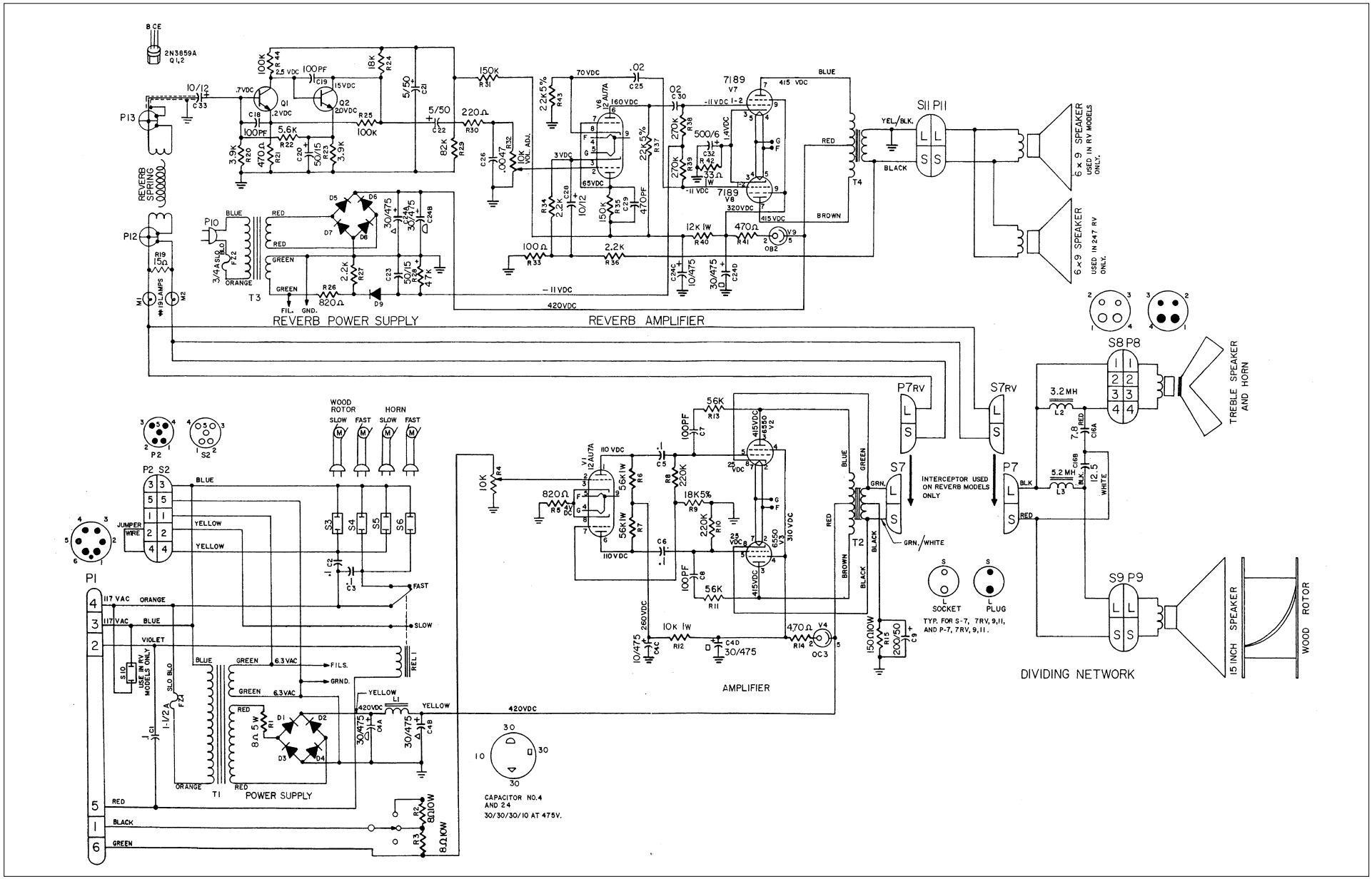

ROTOR **122 AMPLIFIER**

Leslie

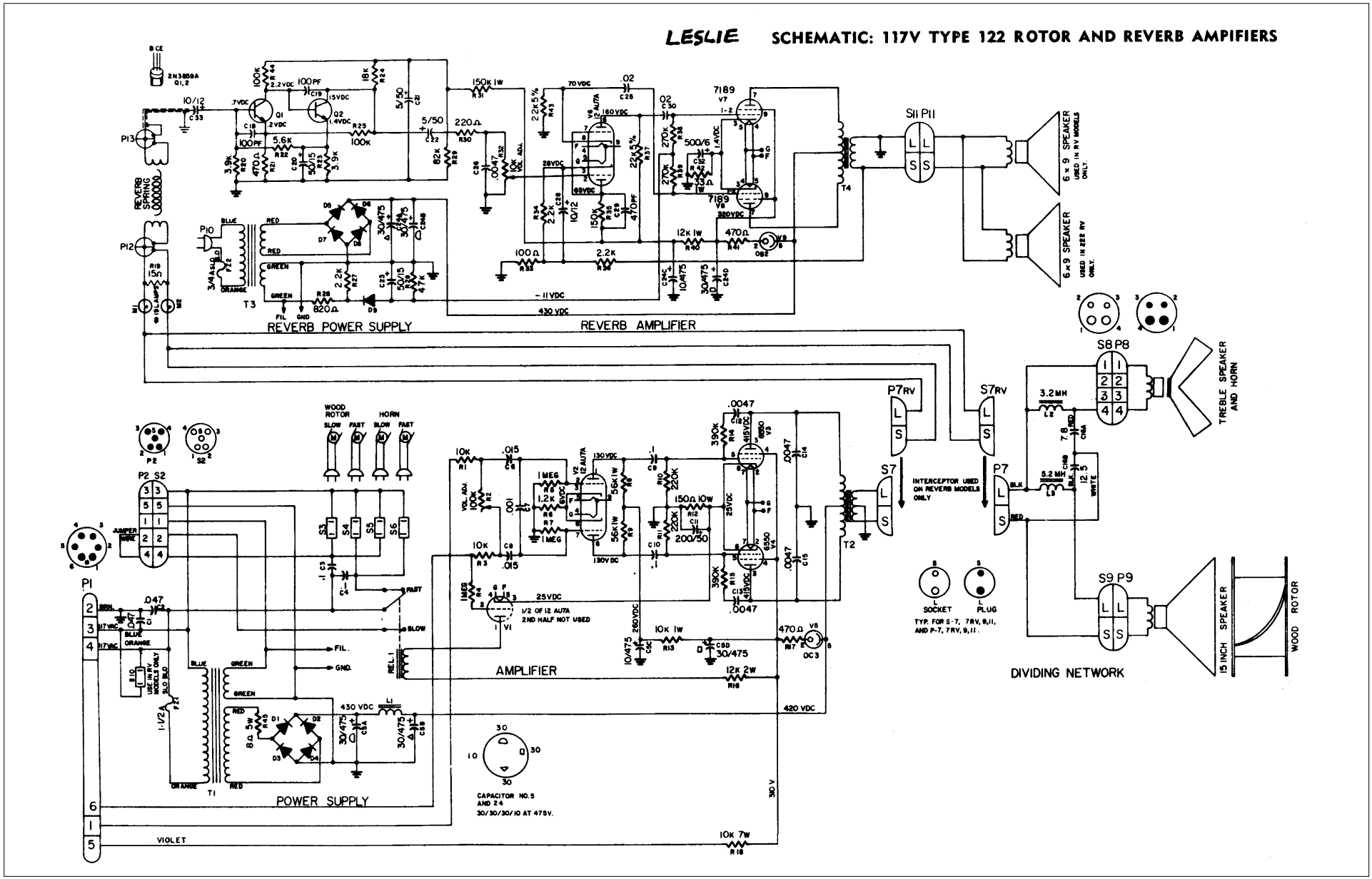

SCHEMATIC: 234/250 VOLT TYPE 122 ROTOR AND REVERB AMPLIFIERS

LESLIE

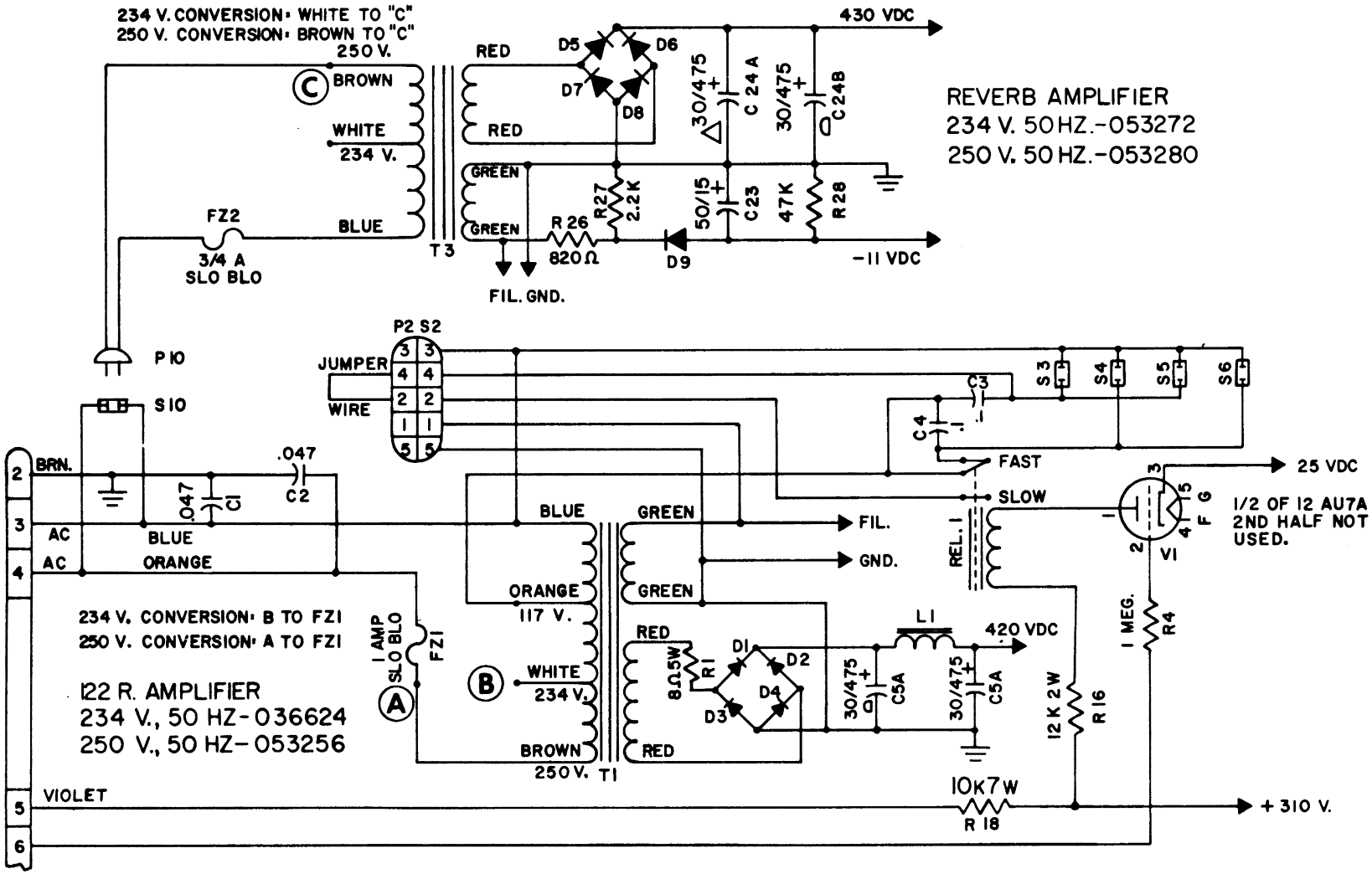

ROTOR **147 (POWER & WIRING)**

Leslie

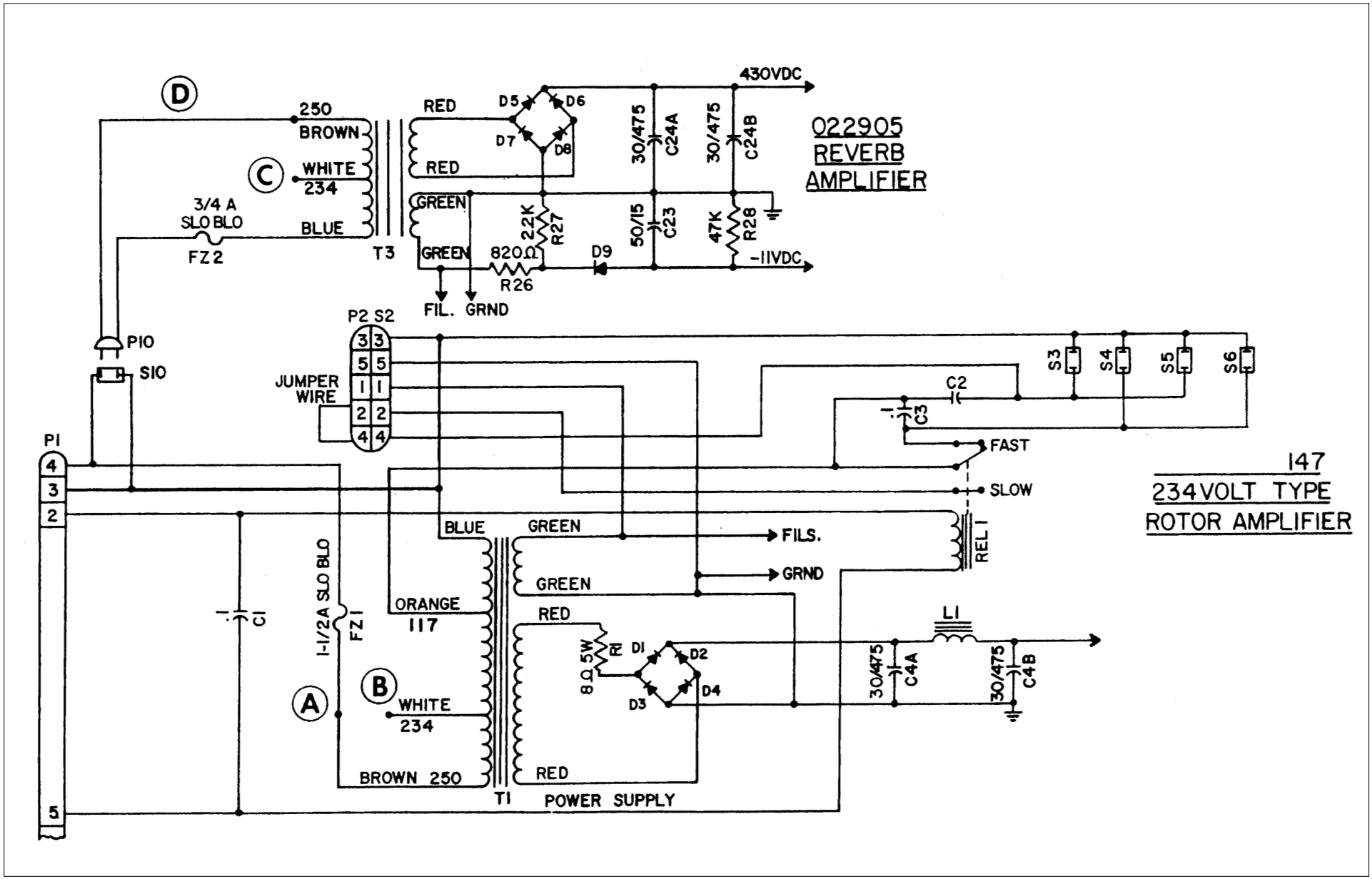

AMP **1000a**

Lifco

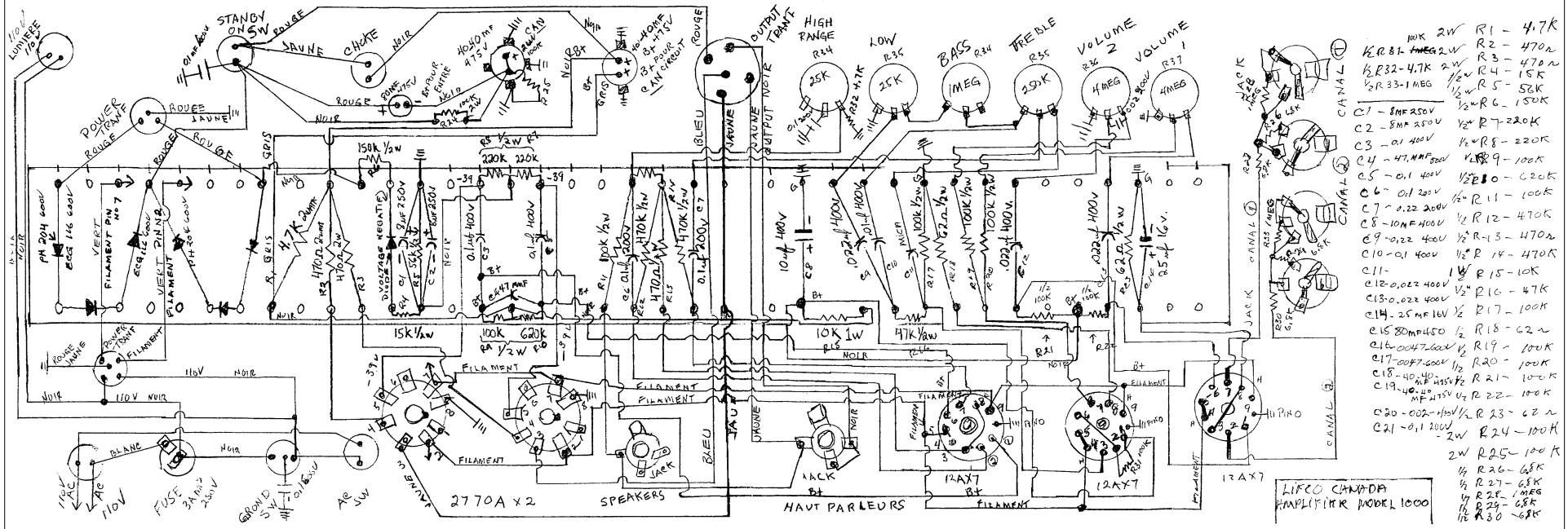

VOLTAGE AND RESISTANCE CHART

Tube	Pin No.	DC Volts No. Signal	AC Volts at rated output	Resistance in Ohms Unit Off
12AX7 (V1)	1	132	2.1	150K*
	2	0	.47	22K
	3	1.2	.44	3.3K
	4 & 5	0	0	0
	6	0	0	0
	7	0	0	0
	8	0	0	0
	9	0	6.3	—
12AU7 (V2)	1	265	12	36K
	2	132	2.1	150K
	3	140	.96	18K
	4 & 5	0	0	0
	6	265	12	38K*
	7	105	0	2.4M*
	8	140	.96	18K
	9	0	6.3	0
12BH7 (V3)	1	365	152	12K*
	2	26	12	200K
	3	48	.7	2.7K
	4 & 5	0	0	0
	6	365	152	12K
	7	26	12	200K
	8	48	.7	2.7K
	9	0	6.3	0
12AT7/12AZ7 (V4)	1	235	112	30**
	2	–56	152	1M
	3	–58	149	220K
	4 & 5	0	0	0
	6	235	112	30**
	7	–56	152	1M
	8	–58	149	220K
	9	0	6.3	0
KT88/6550 (V5, V6)	1	—	—	—
	2	0	0 or 6.3	0
	3	460	116	20*
	4	460	112	240*
	5	–58	149	220K
	6	—	—	—
	7	0	6.3 or 0	0
	8	.5	116	14

*This resistance measured with condenser C15A shorted to ground.
**This resistance measured with condenser C13 shorted to ground.
High impedance VTVM is used to measure the operating voltages.

SCHEMATIC NOTES

1. Unless otherwise specified, resistance values are in ohms, 1/2 watt, and 10% tolerance. Resistors marked with an asterisk (*) are 5% tolerance. Capacitance values smaller than 1 are in microfarads (μF); values greater than 1 are in picofarads (pF). Inductors are in microhenries (μH).

2. R18 and R21 are matched to 1%.

3. In units with serial numbers below 470B0: R11 is 27K 1/2W; R12 is 30K 1/2W; C20 is not used; C18 is used; R29 is 10K 2W; R30 is used. R11 & R12 are connected to the power supply as shown by dotted line there is no connection at point marked with "X".

4. Power transformer T2 is connected as shown in detail "A" in early units.

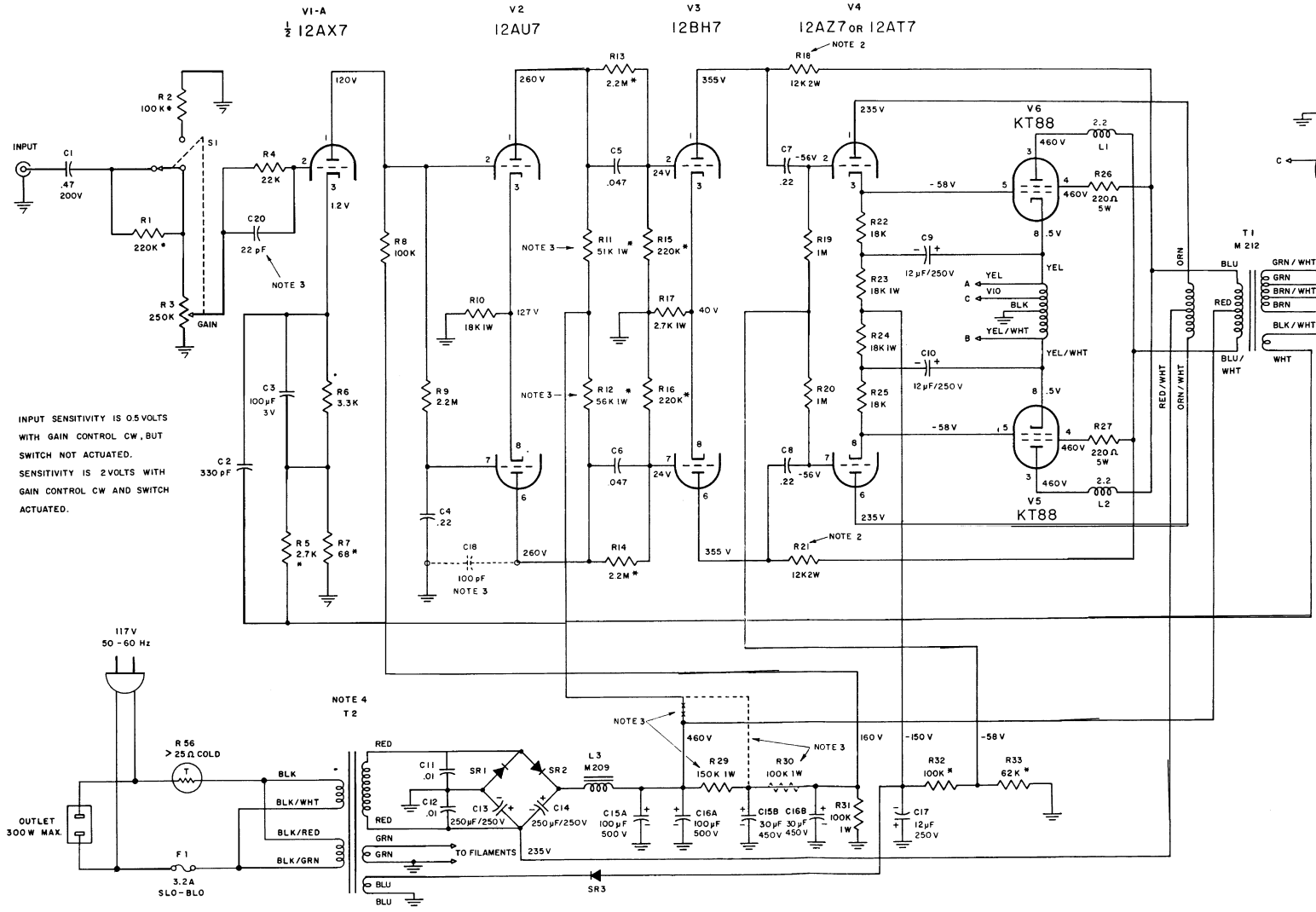

OUTPUT SOCKET CONNECTIONS

IMPEDANCE (OHMS)	CONNECT TO
4	1 AND 2
8	1 AND 3
16	1 AND 4
67	5 AND 6
150	6 AND 7
600	7 AND 8
VOLTAGE (VOLTS)	CONNECT TO
25	1 AND 3
70.7	5 AND 6
120	6 AND 7
240	7 AND 8

175 McIntosh

154 - 344

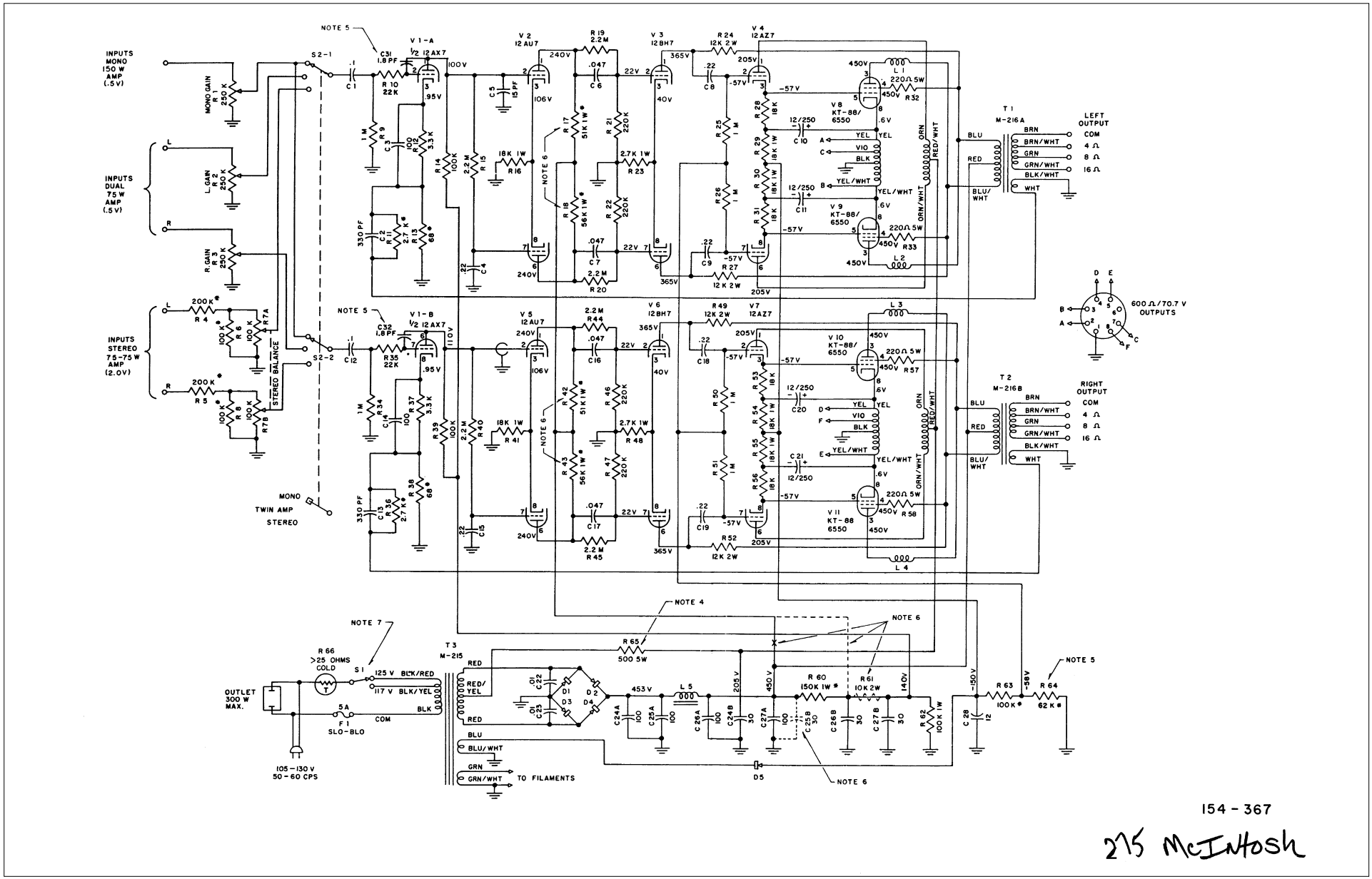
INPUTS MONO 150 W AMP (.5 V)
INPUTS DUAL 75 W AMP (.5 V)
INPUTS STEREO 75-75 W AMP (2.0 V)
MONO GAIN R 1 250 K
L GAIN R 2 250 K
R GAIN R 3 250 K
STEREO BALANCE
MONO
TWIN AMP
STEREO
NOTE 5
NOTE 6
NOTE 7
NOTE 4
V 1-A 1/2 12AX7
V 1-B 1/2 12AX7
V 2 12AU7
V 3 12BH7
V 4 12AZ7
V 5 12AU7
V 6 12BH7
V 7 12AZ7
V 8 KT-88/6550
V 9 KT-88/6550
V 10 KT-88/6550
V 11 KT-88 6550
T 1 M-216A
T 2 M-216B
T 3 M-215
LEFT OUTPUT
RIGHT OUTPUT
COM
4 Ω
8 Ω
16 Ω
600 Ω/70.7 V OUTPUTS
OUTLET 300 W MAX.
R 66 >25 OHMS COLD
S 1
125 V BLK/RED
117 V BLK/YEL
5 A
F 1 SLO-BLO
105-130 V 50-60 CPS
TO FILAMENTS
D5
R 65 500 5W
R 60 150K 1W *
R 61 10K 2W
R 63 100K *
R 64 62K *
R 62 100K 1W
L 1
L 2
L 3
L 4
L 5
154 - 367
275 McIntosh

MC-30 POWER AMP

McIntosh

OUTPUT SOCKET CONNECTIONS

4 OHMS - PINS 1 & 2
8 OHMS - PINS 1 & 3
16 OHMS - PINS 1 & 4
600 OHMS - PINS 7 & 8
70.7 VOLTS - PINS 5 & 6
PIN 6 IS GROUND AND 600 OHM CT

PREAMP INPUT SOCKET CONNECTIONS

PIN 1 - GROUND
PIN 2 PREAMP INPUT (2.5V)
PIN 3 - NOT USED
PIN 4 - 310V B+ AT 3.5MA
PIN 5 0.5 VOLT INPUT
PIN 6 - NOT USED
PIN 7 & 8 - 6.3V AT 1A

C1	.1MF, 200V
C2	NOT USED
C3	100 MF, 12V
C4	8MF, 350V
C5	.22MF, 400V
C6	NOT USED
C7	470MMF, 500V
C8	.047MF, 10%, 600V
C9	.047MF, 10%, 600V
C10	.22MF, 600V, FILM
C11	.22MF, 600V, FILM
C12A	35MF, 500V
C12B	80MF, 500V
C12C	15MF, 450V
C13	8MF, 350V
C14	.47MF, 200V
C15	.47MF, 200V

R1	250K, LOG
R2	100K
R3	27K
R4	1M
R5	3.3K
R6	68 OHMS, 5%
R7	100K
R8	330K
R9	680K
R10	18K, 1W
R11	NOT USED
R12	NOT USED
R13	2.2K, 5%
R14	27K, 5%
R15	3.9K, 5%
R16	220K
R17	1.2K
R18	220K
R19	12K*, 2W
R20	12K*, 2W
R21	56K, 5%
R22	1M
R23	100K, 5%
R24	1M
R25	56K
R26	56K
R27	10K, 10W
R28	150 OHMS, 10W
R29	NOT USED
R30	NOT USED
R31	NOT USED
R32	NOT USED
R33	56K
R34	56K

* MATCHED TO 1%

SR1 400PIV, 10MA

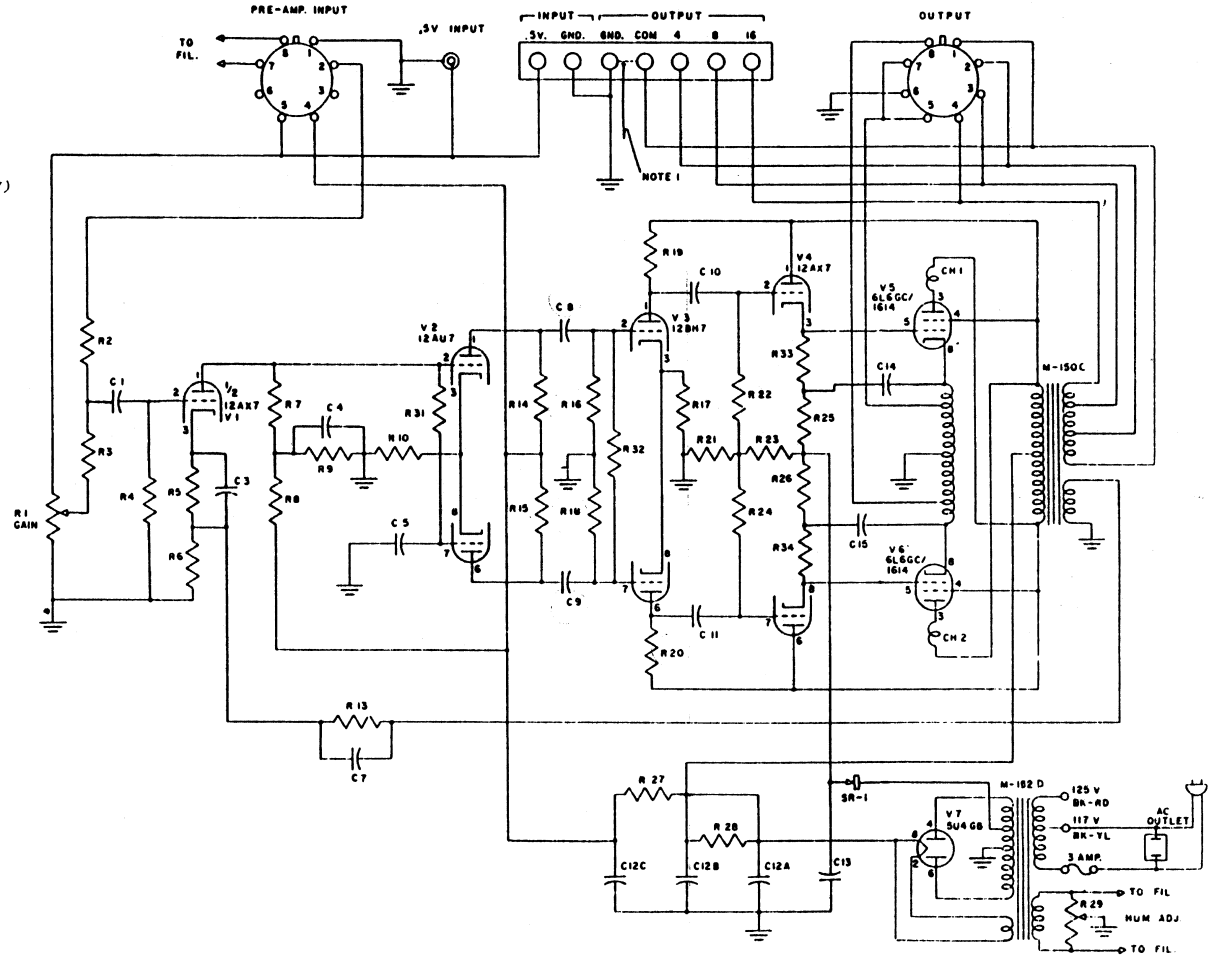

REVISIONS			McINTOSH LABORATORY INC 2 CHAMBERS ST. BINGHAMTON, N.Y.
NO.	DATE	BY	MODEL MC-30 POWER AMPLIFIER
			DRAWN BY / CHK'D / TRACED / SCALE / DATE 3-14-60 / APP'D / MATERIAL / DRAWING NO SC-111-137

Classic Circuitry

Courtesy of Gary Galo, Potsdam, NY

Output Connections
Using Octal Socket

4 ohms - pins 1 and 2
8 ohms - pins 1 and 3
16 ohms - pins 1 and 4
600 ohms - pins 7 and 8
(pin 6 is CT and ground)
70.7 Volts - pins 5 and 6
(pin 6 is ground)

Pre-Amplifier Input
Socket Connections

Pin 1 - ground
Pin 2 - pre-amp input (2.5V)
Pin 3 - not used
Pin 4 - +310V at 3.5 ma.
Pin 5 - .5v input
Pin 6 - not used
Pins 7 and 8 - 6.3V at 1 amp.

Note 1 - This jumper strap may be removed if ungrounded low impedance outputs are desired.

R1	250K Pot., Gain Adj.
R2	390K
R3	27K
R4	3.3M
R5	3.3K
R6	68 ohms, 5%
R7	100K
R8	330K
R9	680K
R10	18K, 1W
R11	1.2M
R12	1M
R13	2.2K, 5%
R14	27K, 5%
R15	30K, 5%
R16	220K
R17	1.2K
R18	220K
R19	12K, 2W*
R20	12K, 2W*
R21	120K, 5%
R22	1M
R23	820K, 5%
R24	1M
R25	220K
R26	220K
R27	10K, 10W
R28	150 ohm 10W
R29	250 ohm Pot.
R30	3.3K
R31	2.2M
R32	330K
R33	220K
R34	220K
R35	180K

*Matched to within 1%

C1	.1mf, 400V
C2	.47mf, 200V
C3	100mf, 12WV
C4	.22mf, 400V
C5	.22mf, 400V
C6	.1mf, 400V
C7	470mmf, 500V
C8	.047mf, 600V
C9	.047mf, 600V
C10	.25mf, 600V
C11	.25mf, 600V
C12A	40mf, 500V
C12B	80mf, 450V
C12C	20mf, 450V
C13	10mf, 450V

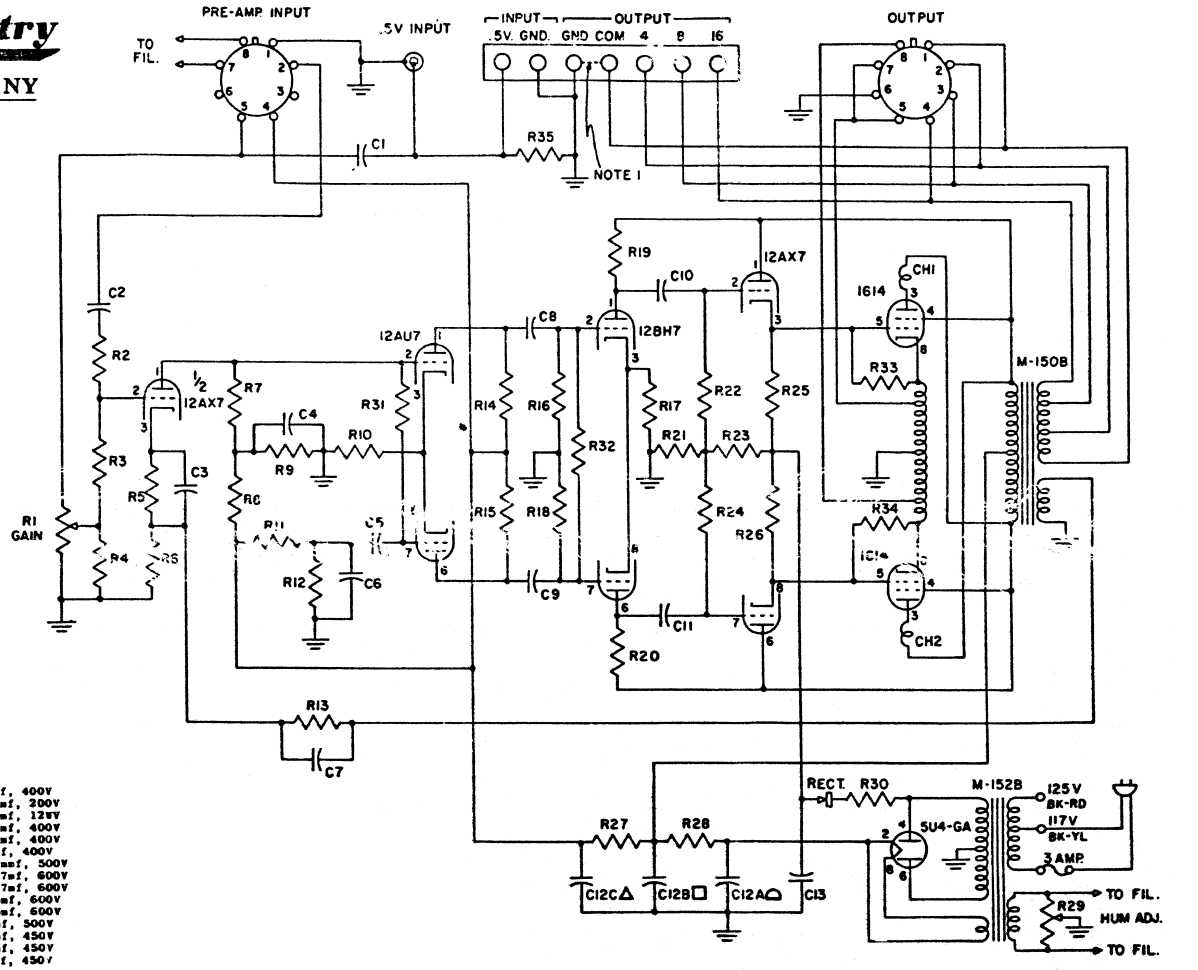

SERIAL NOS. 15329 AND ABOVE

McINTOSH LABORATORY, INC.

SCALE: | APPROVED BY: | DRAWN BY J.W.C.
DATE 5-15-56 | REVISED

MODEL MC-30, TYPE A-116B, POWER AMPLIFIER

DRAWING NUMBER MC-30-4

Output Connections
Using Octal Socket

4 ohms - pins 1 and 2
8 ohms - pins 1 and 3
16 ohms - pins 1 and 4
500/600 ohms - pins 7 and 8
(pin 6 is CT and ground)
70.7 Volts - pins 5 and 6
(pin 6 is ground)

Pre-Amplifier Input
Socket Connections

Pin 1 - ground
Pin 2 - pre-amp input (2.5V)
Pin 3 - not used
Pin 4 - +360V at 3.5 ma.
Pin 5 - not used
Pin 6 - not used
Pins 7 and 8 - 6.3V at 1 amp.

Note 1 - This wire may be removed if ungrounded low impedance outputs are desired.

Note 2 - R31 is not used on some amplifiers.

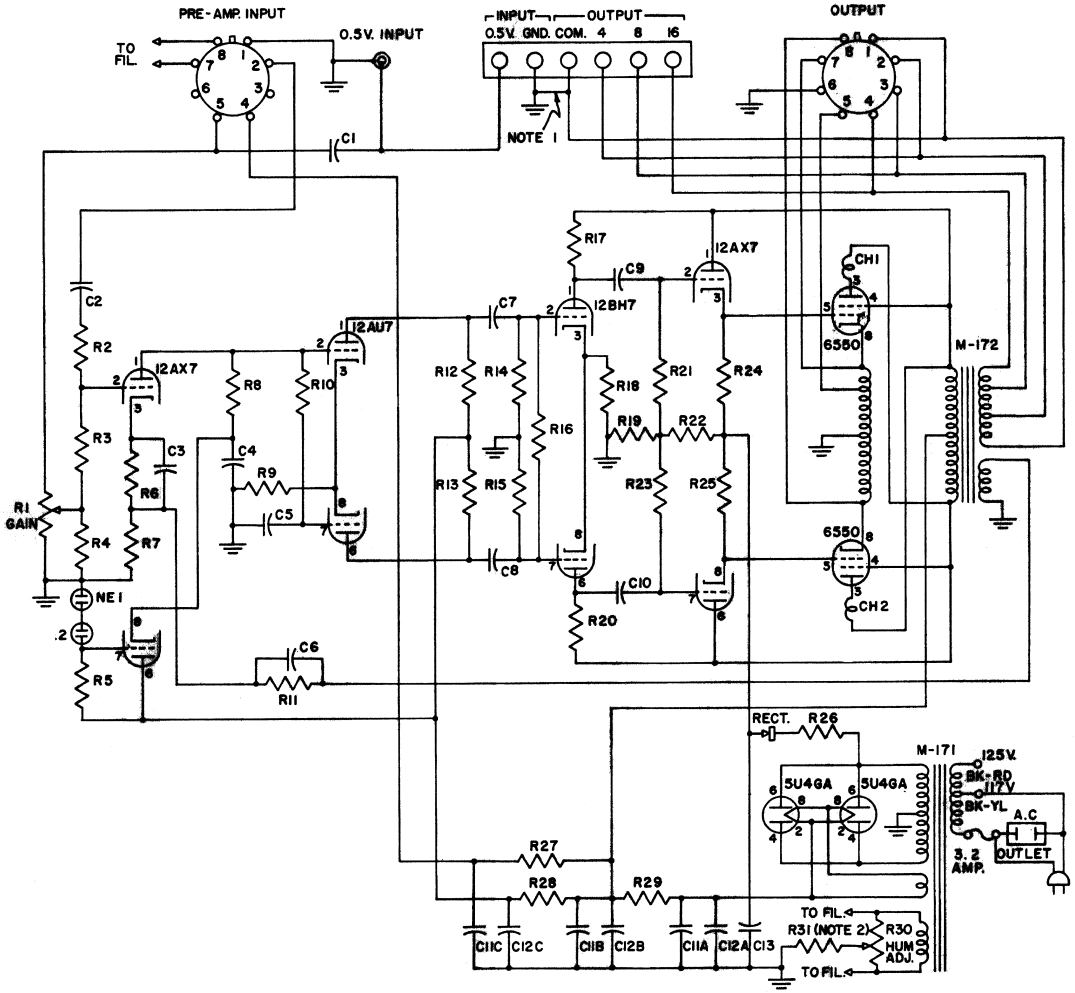

R1	500K Pot. (Gain Adj.)
R2	100K
R3	27K
R4	3.3M
R5	1.2M
R6	3.3K
R7	68 ohms, 5%
R8	100K
R9	18K, 1W
R10	2.2M
R11	1.3K, 5%
R12	27K, 5%
R13	30K, 5%
R14	220K
R15	220K
R16	330K
R17	12K*, 2W
R18	1.2K
R19	120K, 5%
R20	12K*, 2W
R21	1M
R22	820K, 5%
R23	1M
R24	220K
R25	220K
R26	1.8K
R27	10K, 10W
R28	10K, 2W
R29	40 ohms, 10W
R30	250 ohm Pot. (Hum Adj.)
R31	100 ohms

* Matched to within 1%.

C1	.1mf, 400V
C2	.47mf, 200V
C3	20mf, 50V
C4	.22mf, 400V
C5	.22mf, 400V
C6	470mmf, 500V
C7	.047mf, 400V
C8	.047mf, 400V
C9	.25mf, 600V
C10	.25mf, 600V
C11A	40mf, 500V
C11B	80mf, 450V
C11C	20mf, 450V
C12A	40mf, 500V
C12B	80mf, 450V
C12C	20mf, 450V
C13	10mf, 450V

This diagram covers only MC-60 amplifiers with serial numbers from No. 500 to No. 1703 inclusive.

McINTOSH LABORATORY, INC.
Binghamton, N. Y.

SCALE:	APPROVED BY:	DRAWN BY
DATE: 6-30-55	S.L.	REVISED

MODEL MC-60, TYPE A-121 POWER AMPLIFIER

DRAWING NUMBER MC-60

MC-60 TYPE A **121 REVISED**

McIntosh

Output Connections
Using Octal Socket

4 ohms - pins 1 and 2
8 ohms - pins 1 and 3
16 ohms- pins 1 and 4
500/600 ohms - pins 7 and 8
(pin 6 is CT and ground)
70.7 Volts - pins 5 and 6
(pin 6 is ground)

Pre-amplifier Input
Socket Connections

Pin 1 - ground
Pin 2 - pre-amp. input (2.5V)
Pin 3 - not used
Pin 4 - +360V at 3.5 ma.
Pin 5 - not used
Pin 6 - not used
Pins 7 and 8 - 6.3V at 1 amp.

Note 1 - This jumper strap may be removed if ungrounded low impedance outputs are desired.

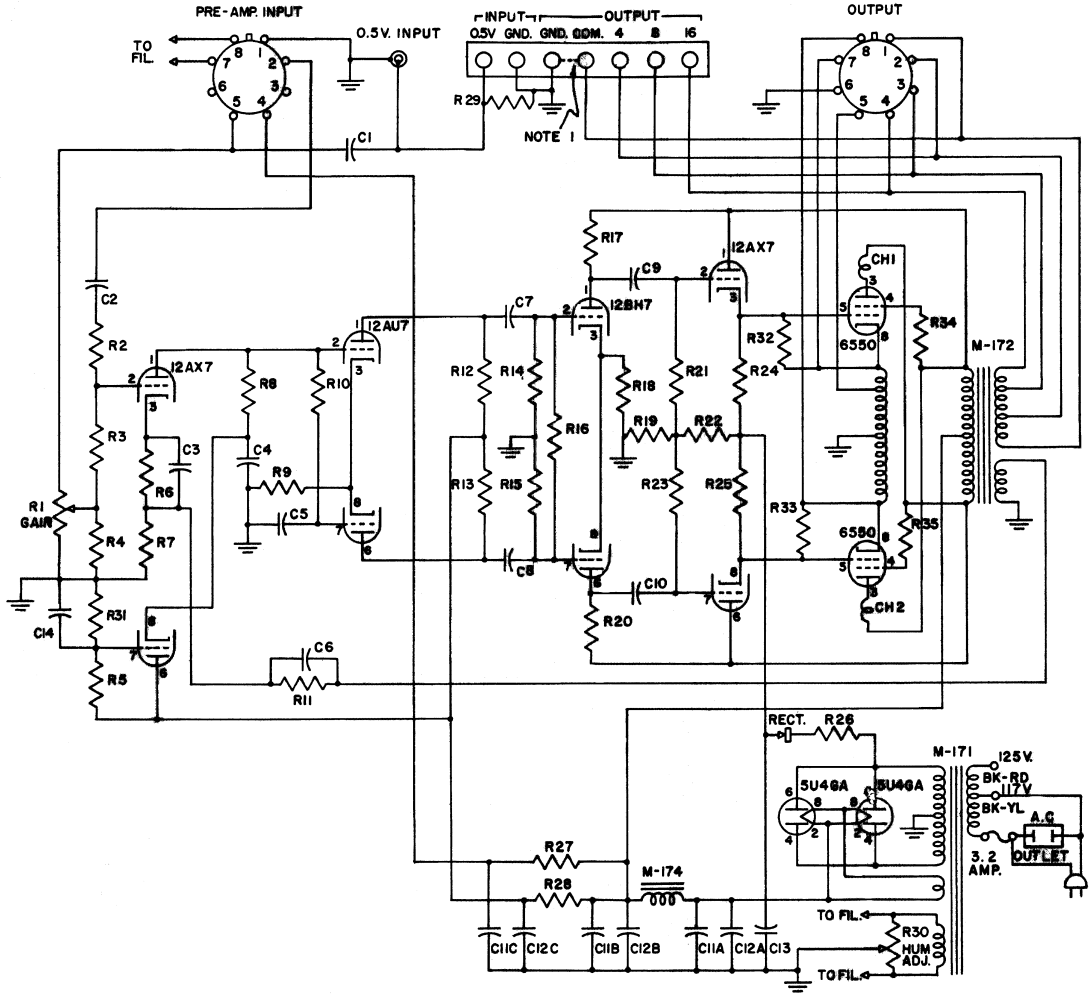

R1	500K Pot. (Gain Adj.)	CH1	Plate Choke
R2	100K	CH2	Plate Choke
R3	27K		
R4	3.3K	C1	.1mf, 400V
R5	560K, 5%	C2	.47mf, 200V
R6	3.3K	C3	100mf, 12V
R7	68 ohms, 5%	C4	8mf, 250V
R8	100K	C5	.22mf, 400V
R9	18K, 1W	C6	470mmf, 500V
R10	2.2M	C7	.047mf, 600V
R11	1.3K, 5%	C8	.047mf, 600V
R12	27K, 5%	C9	.25mf, 600V
R13	30K, 5%	C10	.25mf, 600V
R14	220K	C11A	40mf, 500V
R15	220K	C11B	80mf, 450V
R16	330K	C11C	20mf, 450V
R17	12K*, 2W	C12A	40mf, 500V
R18	1.2K	C12B	80mf, 450V
R19	120K, 5%	C12C	20mf, 450V
R20	12K*, 2W	C13	10mf, 450V
R21	1M	C14	.47mf, 200V
R22	750K 5%		
R23	1M		
R24	220K		
R25	220K		
R26	1.8K		
R27	10K, 10W		
R28	10K, 2W		
R29	180K		
R30	250 ohm Pot. (Hum adj.)		
R31	270K, 5%		
R32	220K		
R33	220K		
R34	220, 1W		
R35	220, 1W		

*Matched to within 1%

SERIAL NO. 4496 AND UP

McINTOSH LABORATORY, INC.
Binghamton, N. Y.

SCALE:	APPROVED BY:	DRAWN BY
DATE: 6-30-56	S.L.	4-20-56

MODEL MC-60, TYPE A-121 POWER AMPLIFIER

DRAWING NUMBER MC-60-3

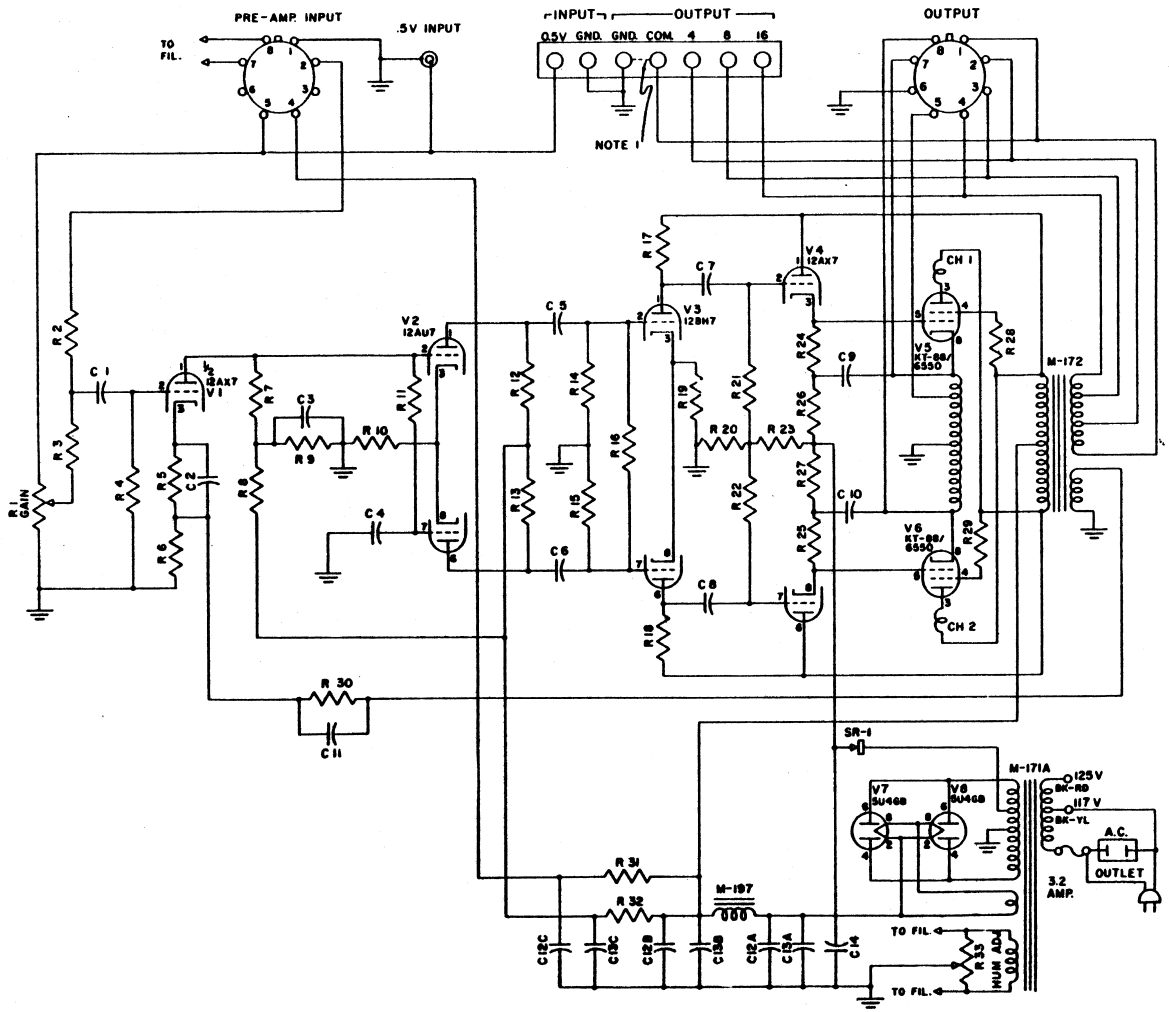

OUTPUT CONNECTIONS
USING OCTAL SOCKET

4 OHMS	- PINS 1 & 2
8 OHMS	- PINS 1 & 3
16 OHMS	- PINS 1 & 4
500/600 OHMS	- PINS 7 & 8
(PIN 6 IS CT AND GROUND)	
70.7 VOLTS	- PINS 5 & 6
(PIN 6 IS GROUND)	

PRE-AMPLIFIER INPUT
SOCKET CONNECTIONS

PIN 1	- GROUND
PIN 2	- PRE-AMP INPUT (2.5V)
PIN 3	- NOT USED
PIN 4	- +360V AT 3.5MA
PIN 5	- PRE-AMP INPUT (0.5V)
PIN 6	- NOT USED
PINS 7 & 8	- 6.3V AT 1 AMP

R1 250K POT (GAIN ADJ.)
R2 100K
R3 27K
R4 1M
R5 3.3K
R6 68 5%
R7 100K
R8 330K
R9 680K
R10 18K 1W
R11 2.2M
R12 27K 5%
R13 30K 5%
R14 220K
R15 220K
R16 330K
R17 12K* 2W
R18 12K* 2W
R19 1.2K
R20 56K 5%
R21 1M
R22 1M
R23 100K 5%
R24 56K
R25 56K
R26 56K
R27 56K
R28 220 1W
R29 220 1W
R30 1.5K 5%
R31 10K 10W
R32 10K 2W
R33 250 OHM POT (HUM ADJ.)
*MATCHED TO WITHIN 1%

CH1 PLATE CHOKE
CH2 PLATE CHOKE

C1 .1MF, 200V
C2 100MF, 12V
C3 8MF, 250V
C4 .22MF, 400V
C5 .047MF, 600V
C6 .047 MF, 600V
C7 .22MF, 600V
C8 .22MF, 600V
C9 .47MF, 200V
C10 .47MF, 200V
C11 470MMF, 500V
C12A 35MF, 500V
C12B 80MF, 500V
C12C 15MF, 450V
C13A 35MF, 500V
C13B 80MF, 500V
C13C 15MF, 450V
C14 8MF, 250V

NOTE 1 - THIS JUMPER STRAP MAY BE REMOVED IF UNGROUNDED LOW IMPEDANCE OUTPUTS ARE DESIRED

SERIAL NO. 5F646 AND ABOVE

REVISIONS			McINTOSH LABORATORY INC. 2 CHAMBERS ST. BINGHAMTON, N. Y.		
NO.	DATE	BY	MODEL MC-60, TYPE A-125 POWER AMPLIFIER		
1			DRAWN BY V.G.	SCALE	MATERIAL
2			CHK'D SAC	DATE 4.19.60	DRAWING NO. SC 14-127
3			VELLUM	APP'D SAC	
4					
5					

MC225 SCHEMATIC
(Schematic No. SC126-167A)

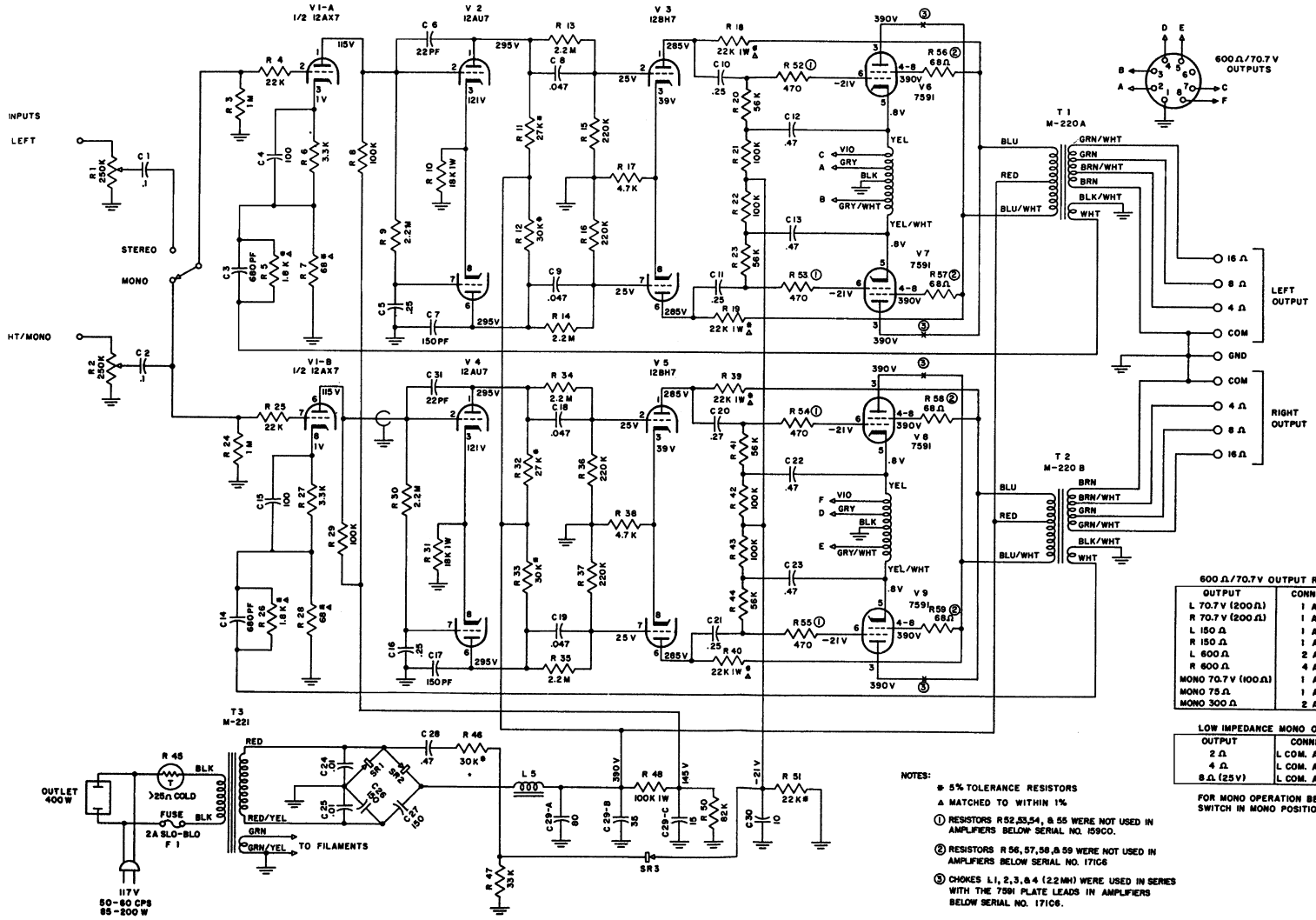

NOTES:

* 5% TOLERANCE RESISTORS

△ MATCHED TO WITHIN 1%

① RESISTORS R52,53,54, & 55 WERE NOT USED IN AMPLIFIERS BELOW SERIAL NO. 1590.

② RESISTORS R56,57,58,& 59 WERE NOT USED IN AMPLIFIERS BELOW SERIAL NO. 1716.

③ CHOKES L1, 2, 3, & 4 (2.2 MH) WERE USED IN SERIES WITH THE 7591 PLATE LEADS IN AMPLIFIERS BELOW SERIAL NO. 1716.

600 Ω/70.7 V OUTPUT RECEPTICAL CONNECTIONS

OUTPUT	CONNECT TO	JUMPER
L 70.7 V (200 Ω)	1 AND 7	—
R 70.7 V (200 Ω)	1 AND 8	—
L 150 Ω	1 AND 2	—
R 150 Ω	1 AND 4	—
L 600 Ω	2 AND 3	—
R 600 Ω	4 AND 5	—
MONO 70.7 V (100 Ω)	1 AND 7	7 TO 8
MONO 75 Ω	1 AND 2	2 TO 4
MONO 300 Ω	2 AND 3	2 TO 4, 3 TO 5

LOW IMPEDANCE MONO OUTPUT CONNECTIONS

OUTPUT	CONNECT TO	JUMPER
2 Ω	L COM. AND L 4 Ω	R 4 Ω TO L 4 Ω
4 Ω	L COM. AND L 8 Ω	R 8 Ω TO L 8 Ω
8 Ω (25 V)	L COM. AND L 16 Ω	R 16 Ω TO L 16 Ω

FOR MONO OPERATION BE SURE TO PLACE MONO/STEREO SWITCH IN MONO POSITION.

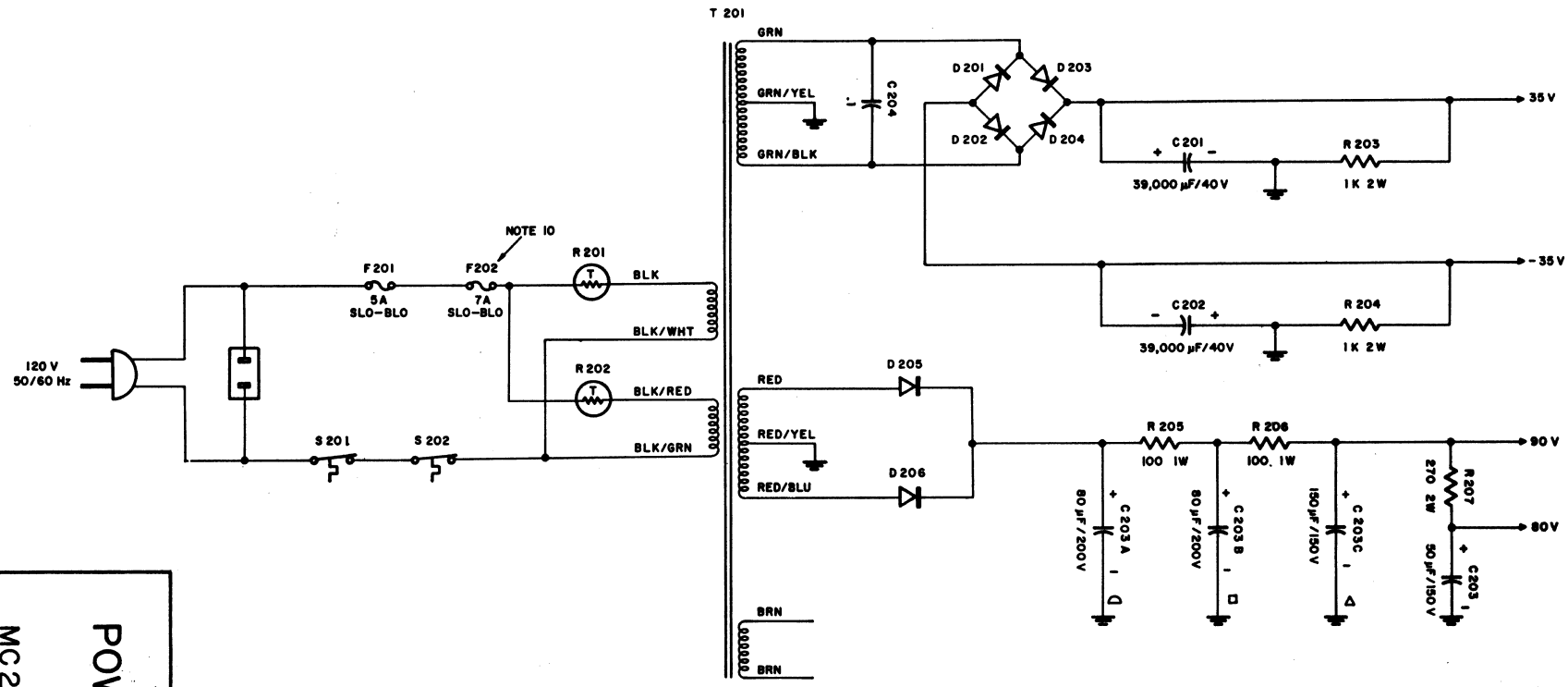

POWER SUPPLY
SECTION
MC 2100 154-659

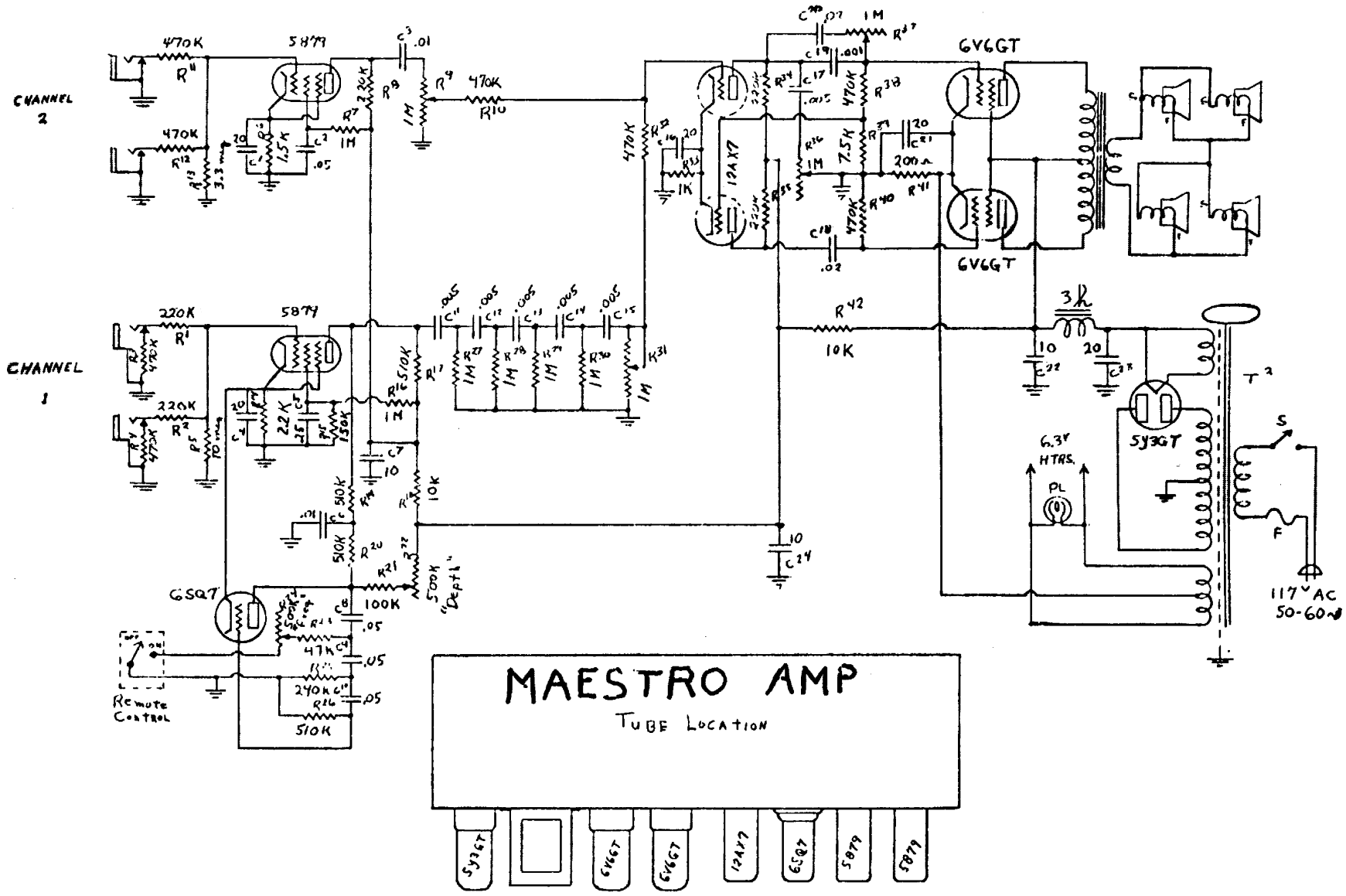

Voltages to Chassis with 20,000 Ohms per Volt, Meter

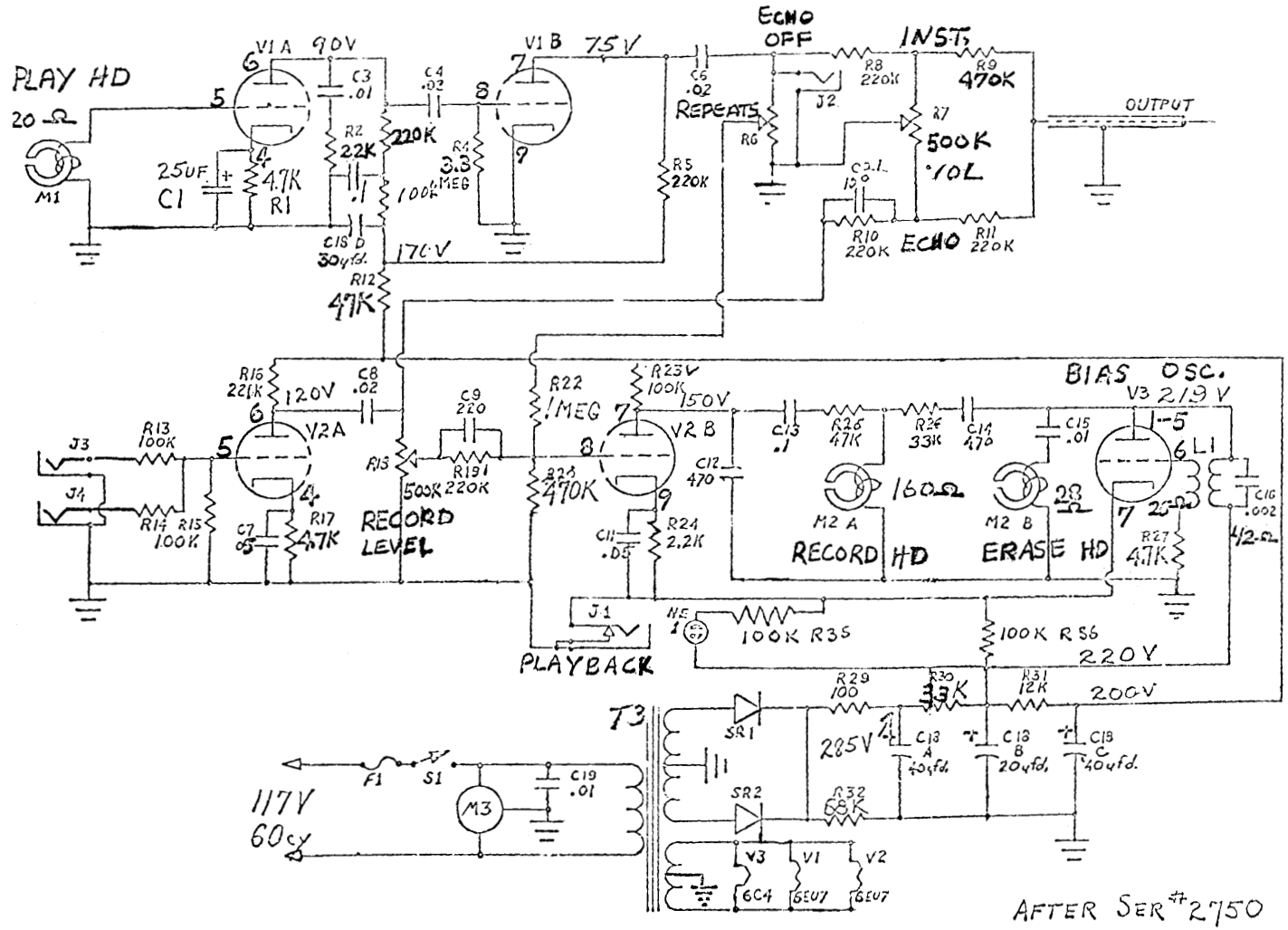

ECHOPLEX CIRCUIT DIAGRAM
Market Electronics Co.

DO NOT PUT VOM OR VTVM ACROSS RECORD OR ERASE HEAD LEAD OR IT WILL DAMAGE HEAD BY CHANGING RESISTANCE

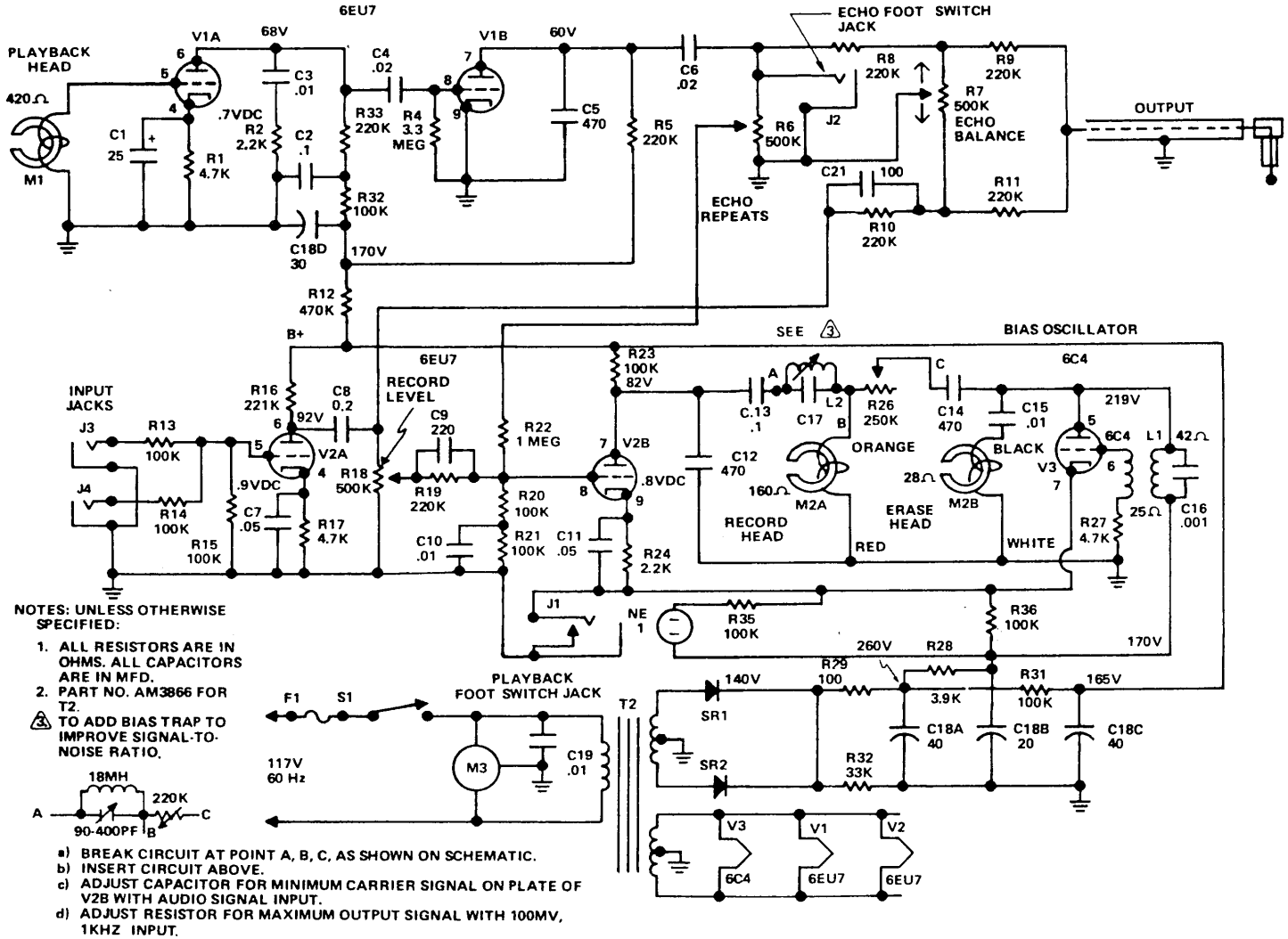

NOTES: UNLESS OTHERWISE SPECIFIED:

1. ALL RESISTORS ARE IN OHMS. ALL CAPACITORS ARE IN MFD.
2. PART NO. AM3866 FOR T2.

3 TO ADD BIAS TRAP TO IMPROVE SIGNAL-TO-NOISE RATIO.

a) BREAK CIRCUIT AT POINT A, B, C, AS SHOWN ON SCHEMATIC.
b) INSERT CIRCUIT ABOVE.
c) ADJUST CAPACITOR FOR MINIMUM CARRIER SIGNAL ON PLATE OF V2B WITH AUDIO SIGNAL INPUT.
d) ADJUST RESISTOR FOR MAXIMUM OUTPUT SIGNAL WITH 100MV, 1KHZ INPUT.

ECHOPLEX EP-2 SCHEMATIC DIAGRAM - SERIAL NO. 5500 TO 5938

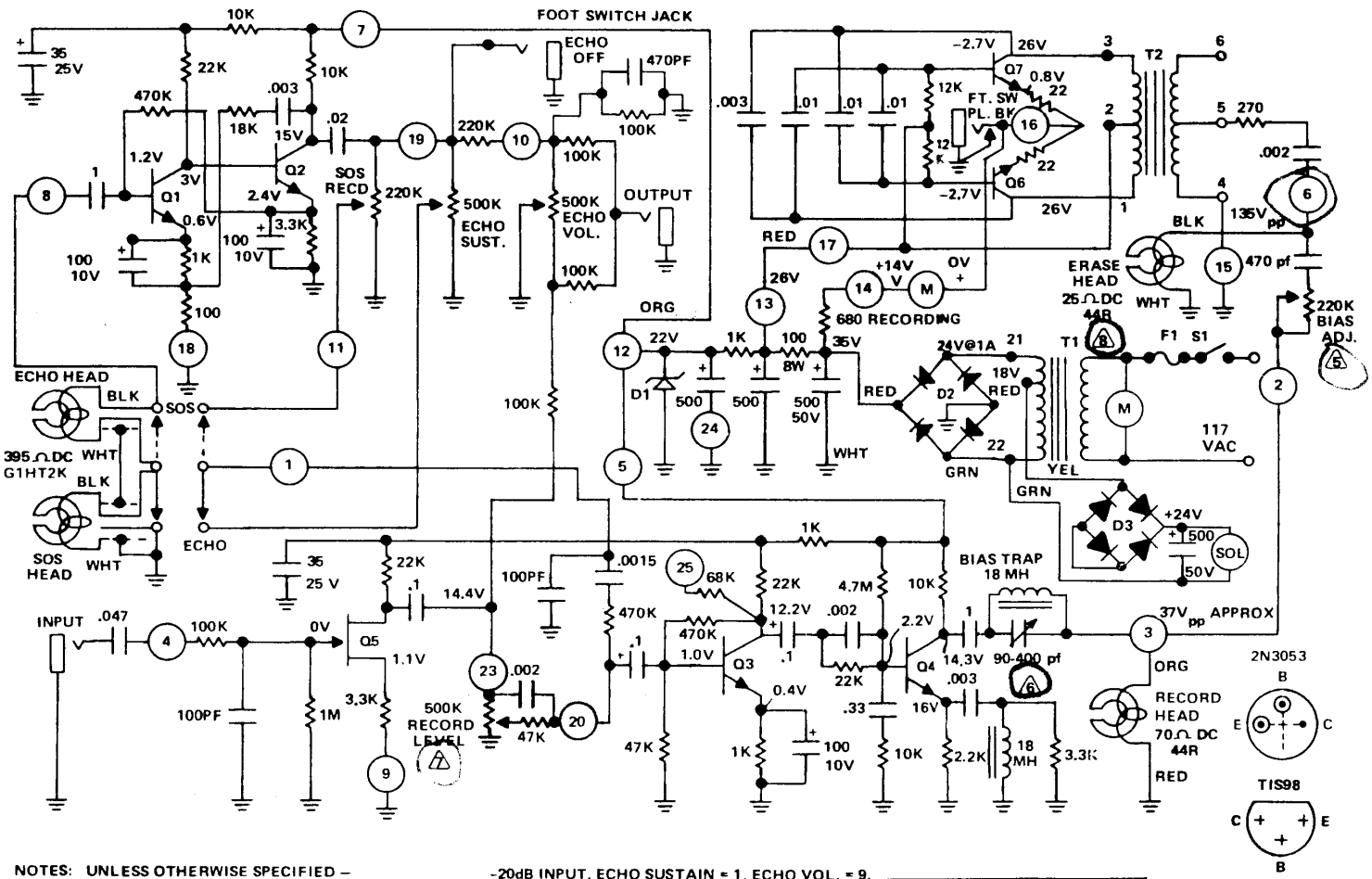

NOTES: UNLESS OTHERWISE SPECIFIED –

1. ALL RESISTOR VALUES ARE IN OHMS 1/2 WATT.
2. ALL VOLTAGES ± 20%.
3. OPC BOARD TERMINALS.
4. ALL CAPACITOR VALUES ARE IN MFD.
5. ADJUST FOR MAX. UNDISTORTED OUTPUT 1kHz -20dB INPUT. ECHO SUSTAIN = 1, ECHO VOL. = 9.
6. ADJUST FOR MINIMUM SIGNAL ON COLLECTOR Q4. NO SIGNAL IN.
7. ADJUST FOR 20dB OUTPUT, -20dB 1kHz INPUT. ECHO SUSTAIN = 1, ECHO VOL. = 9.
8. T1 B346-012 CUSTOM COIL.

D1 ZENER	1N4748
D2 BRIDGE	1A, 100V
Q1,Q2,Q3,Q4	TIS98
Q5	TIS58
Q6,Q7	2N3053
D3	IR, 100BIP

ECHOPLEX EP-3 SCHEMATIC DIAGRAM - SERIAL NO. 12961 TO 28591

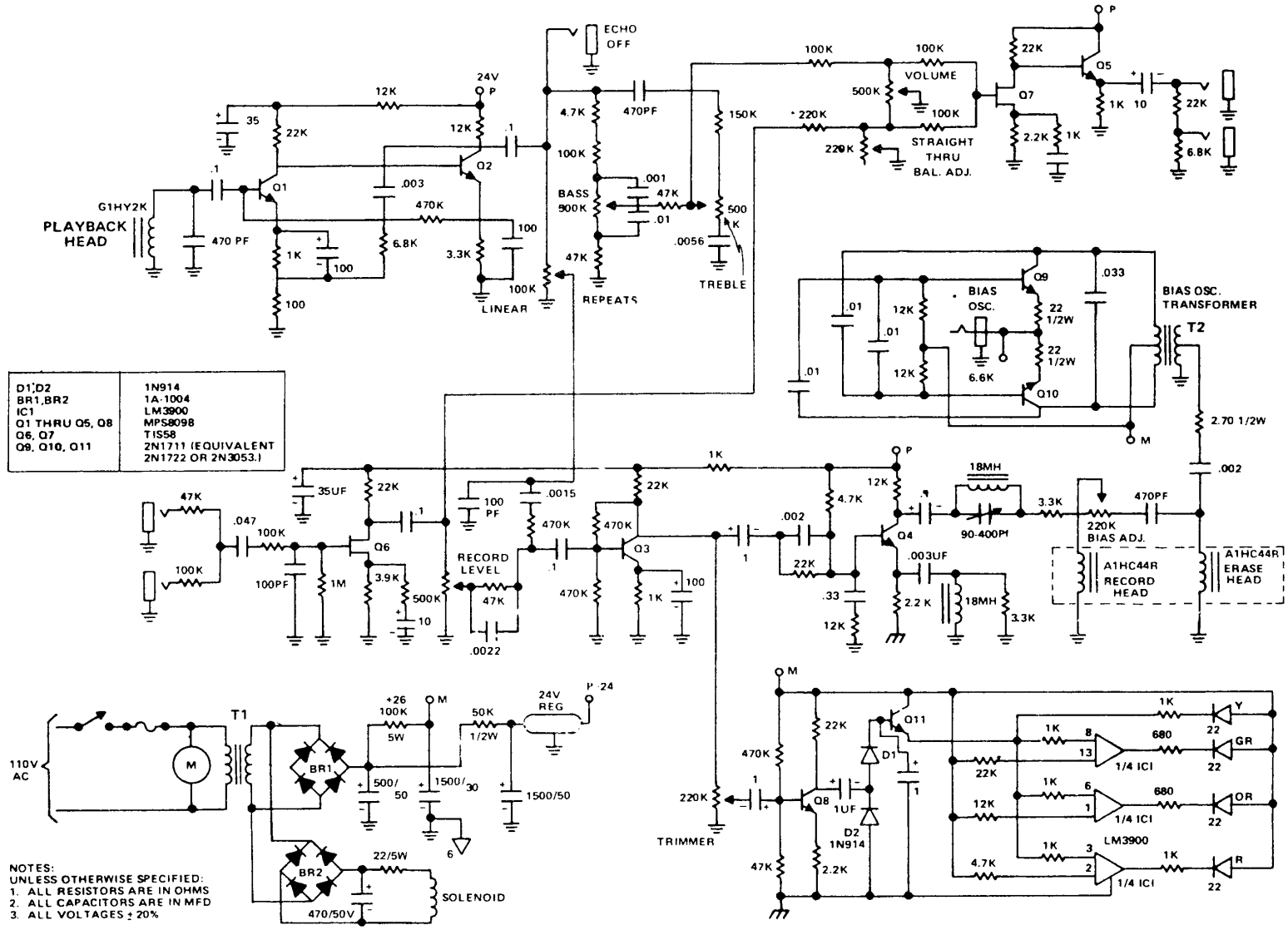

NOTES:
UNLESS OTHERWISE SPECIFIED:
1. ALL RESISTORS ARE IN OHMS
2. ALL CAPACITORS ARE IN MFD
3. ALL VOLTAGES ± 20%

ECHOPLEX EP-4 SCHEMATIC DIAGRAM

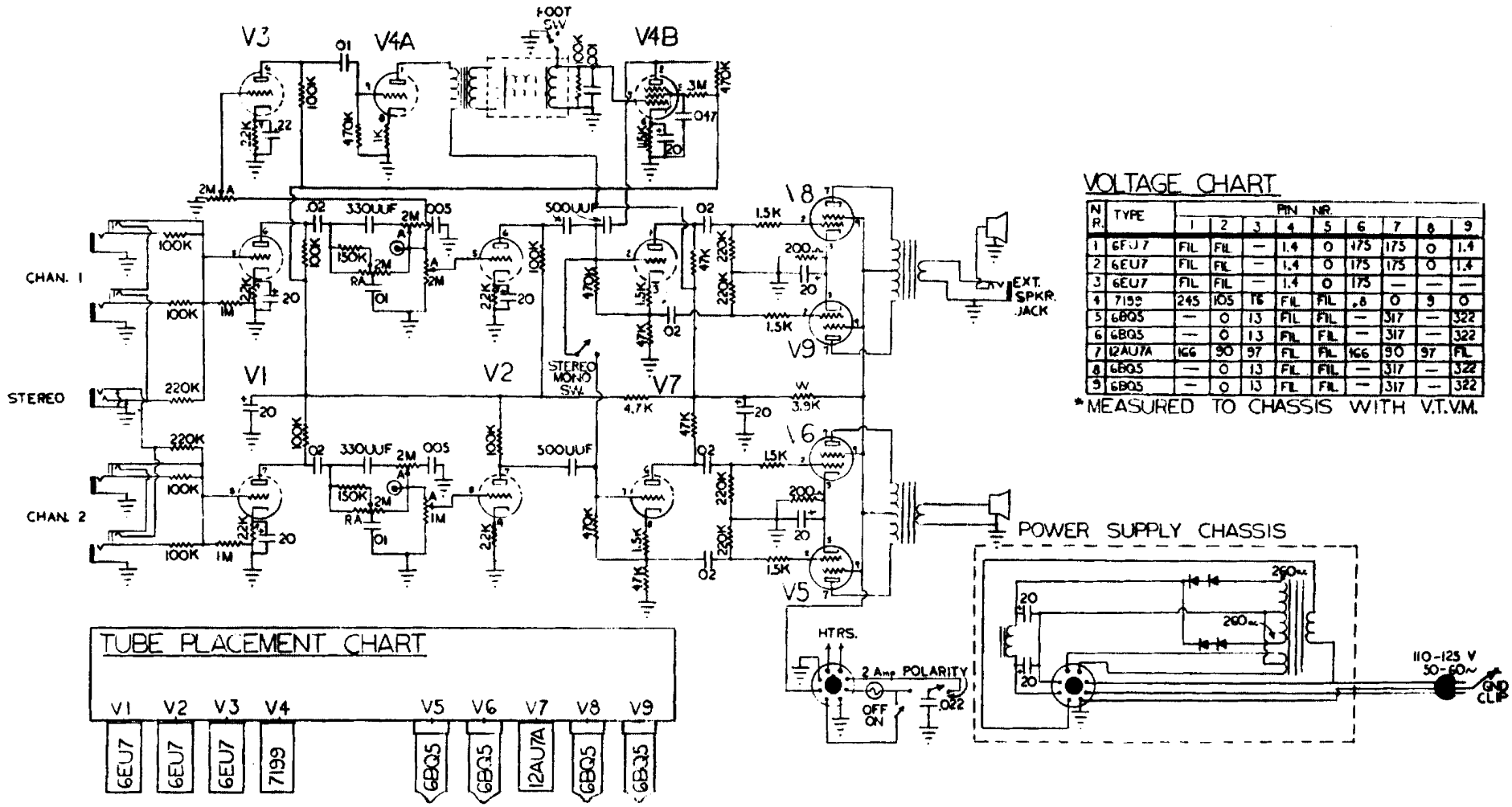

VOLTAGE CHART

NR.	TYPE	PIN NR. 1	2	3	4	5	6	7	8	9
1	6EU7	FIL	FIL	—	1.4	0	175	175	0	1.4
2	6EU7	FIL	FIL	—	1.4	0	175	175	0	1.4
3	6EU7	FIL	FIL	—	1.4	0	175	—	—	—
4	7199	245	105	16	FIL	FIL	.8	0	9	0
5	6BQ5	—	0	13	FIL	FIL	—	317	—	322
6	6BQ5	—	0	13	FIL	FIL	—	317	—	322
7	12AU7A	166	90	97	FIL	FIL	166	90	97	FIL
8	6BQ5	—	0	13	FIL	FIL	—	317	—	322
9	6BQ5	—	0	13	FIL	FIL	—	317	—	322

*MEASURED TO CHASSIS WITH V.T.V.M.

TUBE PLACEMENT CHART

V1	V2	V3	V4	V5	V6	V7	V8	V9
6EU7	6EU7	6EU7	7199	6BQ5	6BQ5	12AU7A	6BQ5	6BQ5

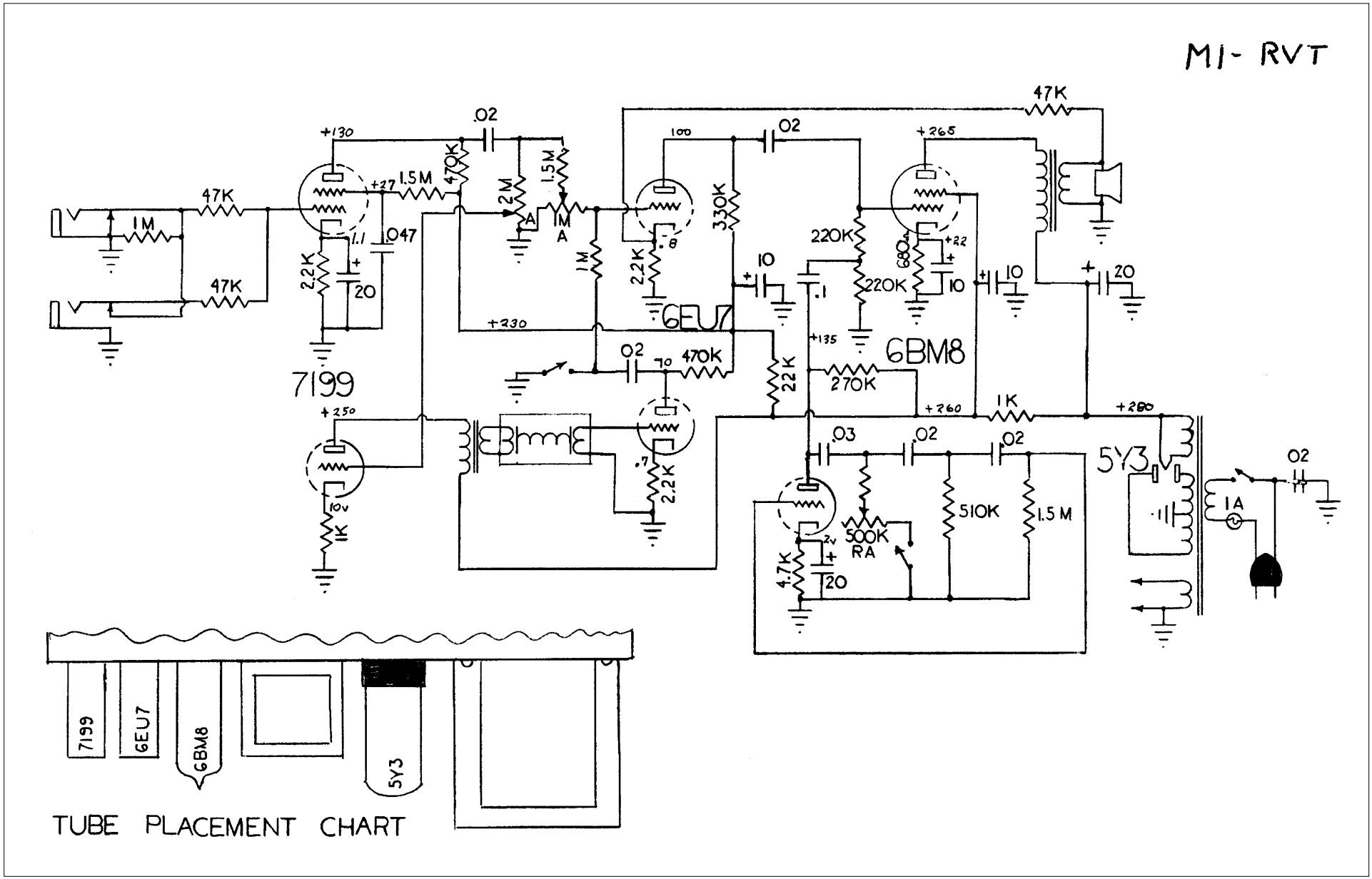
M1- RVT
47K
.02
+130
+265
100
.02
1.5M
470K
2M
1.5M
+27
47K
1M
A
1M
A
330K
220K
680
+22
1.1
.047
.8
2.2K
10
10
10
20
2.2K
20
47K
220K
.1
+230
6EU7
+135
6BM8
7199
.02
70
470K
22K
270K
+250
+260
1K
+280
.03
.02
.02
5Y3
.02
10v
1K
.7
2.2K
510K
1.5 M
1A
500K
RA
2v
4.7K
20
7199
6EU7
6BM8
5Y3
TUBE PLACEMENT CHART

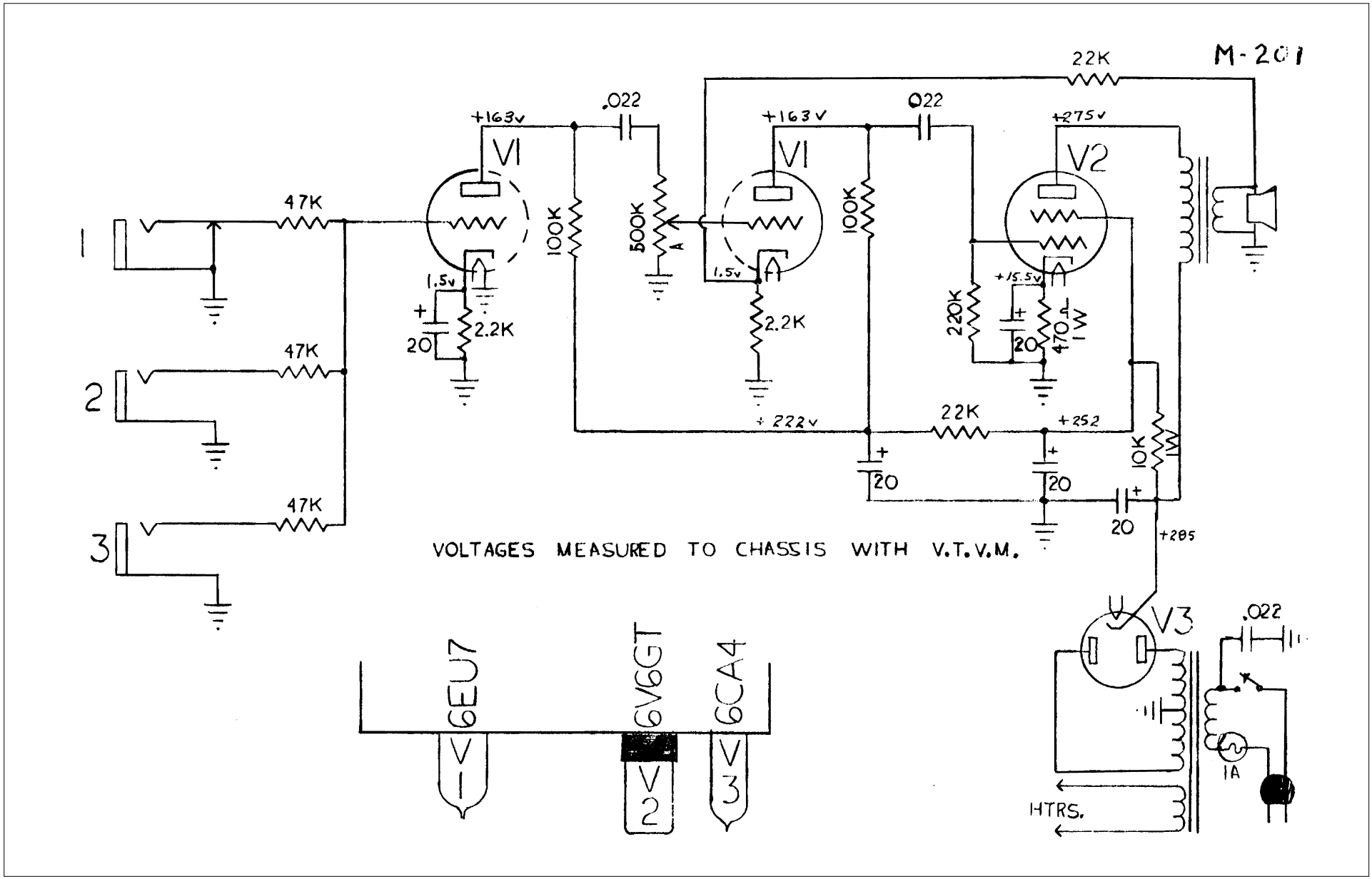
M-201
22K
+163v
.022
V1
47K
100K
500K
A
1.5v
2.2K
20
+163v
.022
V1
100K
1.5v
2.2K
+275v
V2
220K
+15.5v
470Ω
1W
20
+222v
22K
+252
20
20
10K
1W
20
+285
1
2
3
47K
47K
47K
VOLTAGES MEASURED TO CHASSIS WITH V.T.V.M.
6EU7
6V6GT
6CA4
V1
V2
V3
V3
.022
1A
HTRS.

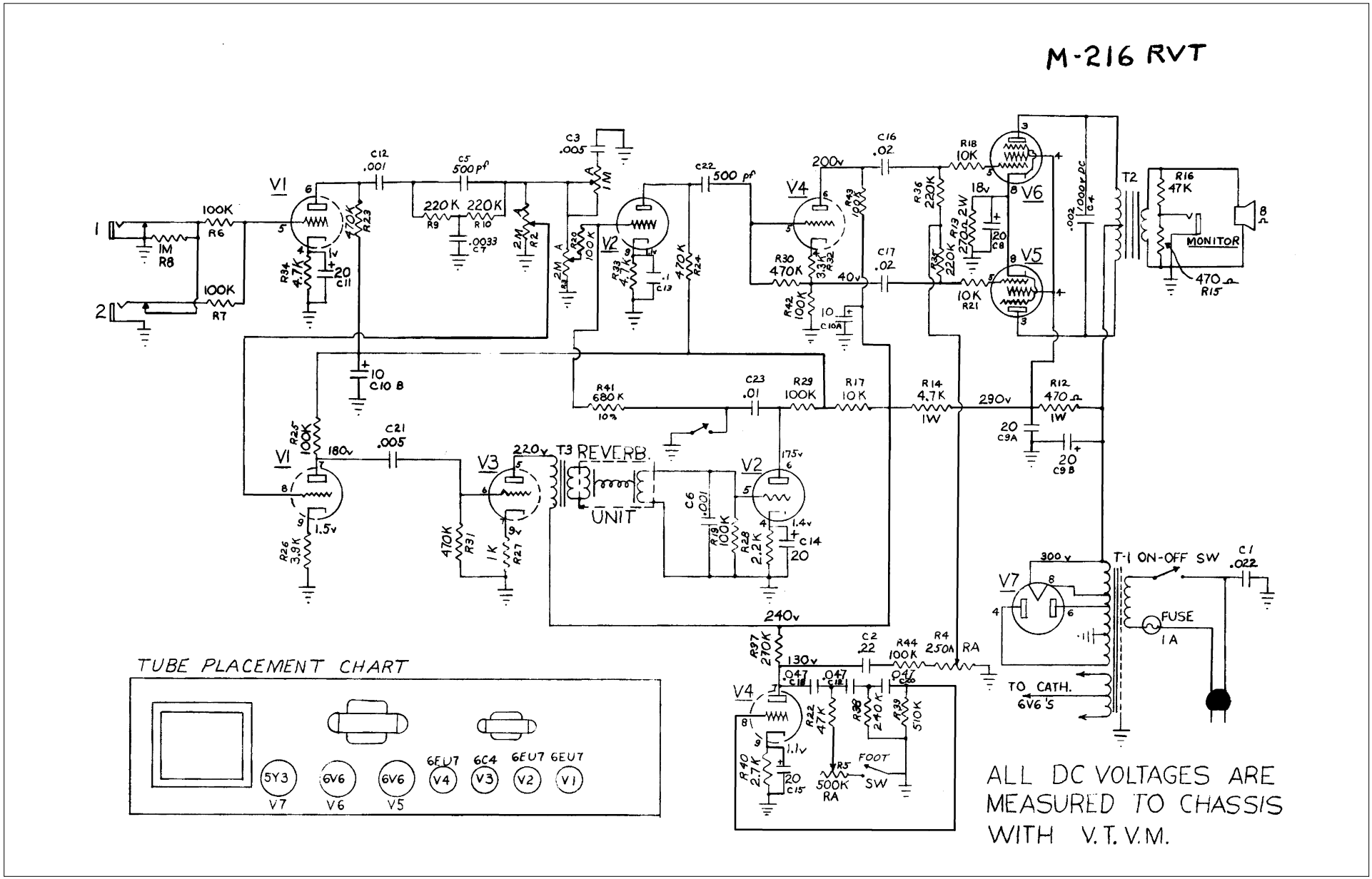
M-216 RVT
V1
V2
V3
V4
V5
V6
V7
T2
T3 REVERB. UNIT
MONITOR
470 Ω R15
R16 47K
8 Ω
T-1 ON-OFF SW
C1 .022
FUSE 1A
TO CATH. 6V6'S
FOOT SW
R5 500K RA
ALL DC VOLTAGES ARE MEASURED TO CHASSIS WITH V.T.V.M.
TUBE PLACEMENT CHART
5Y3 V7
6V6 V6
6V6 V5
6EU7 V4
6C4 V3
6EU7 V2
6EU7 V1

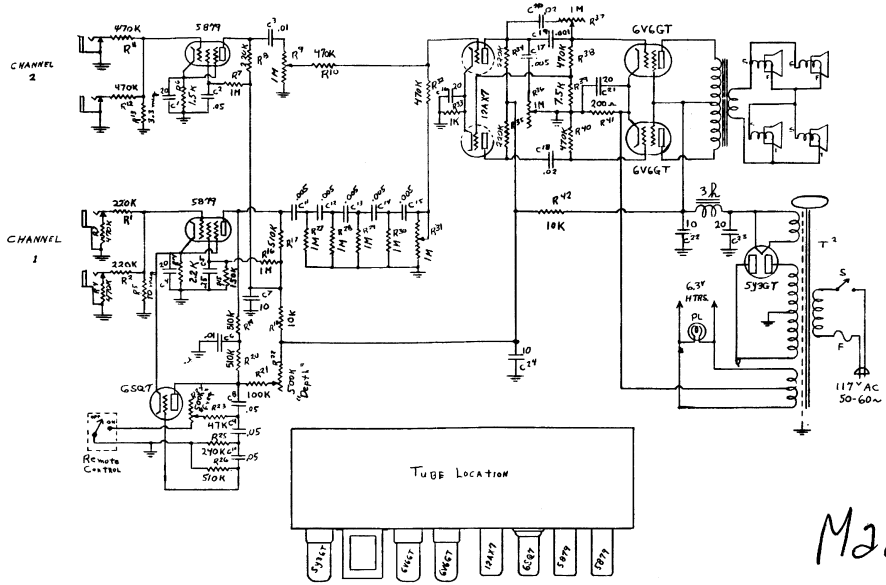

MAESTRO

Voltages to Chassis with 20,000 Ohms per Volt, Meter

Tube	Use	E_{p_1}	E_{scr}	E_{k}	E_{p2}	E_{B}
5Y3	Rectifier	300V AC	.....	+315	300V AC	.....
6V6	Output	+305	+310	+18.5	.....	+310
12AX7	Phase Inverter	+135	.....	+1.25	+135	+275
5879	Channel 2	+88	+50	+1.53	.....	+262
5879	Channel 1	+73	+31	+1.2	.....	+262
6SQ7	Tremolo	+97*	.....	+1.2	.....	+275

*Tremolo "Off" and Depth Control at "Min."

PARTS LIST

$R^{1,2,8,34,35}$	220 K	1 Watt	10%
$R^{3,4,10,11,32}$	470 K	1 Watt	20%
R^{5}	10 meg.	½ Watt	20%
R^{6}	1.5 K	1 Watt	10%
$R^{7,16,27,28,29,30}$	1 meg.	1 Watt	10%
$R^{9,31,36}$	1 meg.	Volume Control	
R^{13}	3.3 meg.	1 Watt	20%
R^{14}	2.2 K	1 Watt	5%
R^{15}	150 K	½ Watt	5%
$R^{17,26}$	510 K	1 Watt	5%
$R^{18,42}$	10 K	1 Watt	20%
$R^{19,20}$	510 K	1 Watt	10%
R^{21}	100 K	1 Watt	10%
$R^{22,24}$	500 K	Volume Control	
R^{23}	*47 K	1 Watt	
R^{25}	240 K	1 Watt	5%
R^{33}	1 K	1 Watt	20%
R^{37}	1 meg.	Volume Control	
R^{39}	7.5 K	1 Watt	5%
R^{41}	200 ohm	7 Watts	10%
$R^{38,40}$	470 K	1 Watt	5%
$C^{1,4,16,21}$	20 mfd.	25 WV	
$C^{2,8,9,10}$	.05 mfd.	600 V	
$C^{3,6}$	.01 mfd.	600 V	
C^{5}	.25 mfd.	200 V	
$C^{7,24}$	10 mfd.	450 V	
$C^{11,12,13,14,15,17}$	.005 mfd.	600 V	
$C^{18,20}$	.02 mfd.	600 V	
C^{19}	.001 mfd.	600 V	
C^{22}	10 mfd.	450 V	
C^{23}	20 mfd.	450 V	
T^{1}	Output Trans.	(GA-40-02)	
T^{2}	Power Trans.	(GA-10-P)	
S	Toggle Switch	SPST	
F	Fuse	3 Amp. (3 AG)	
PL	Type 47		

*This Value Picked at Factory

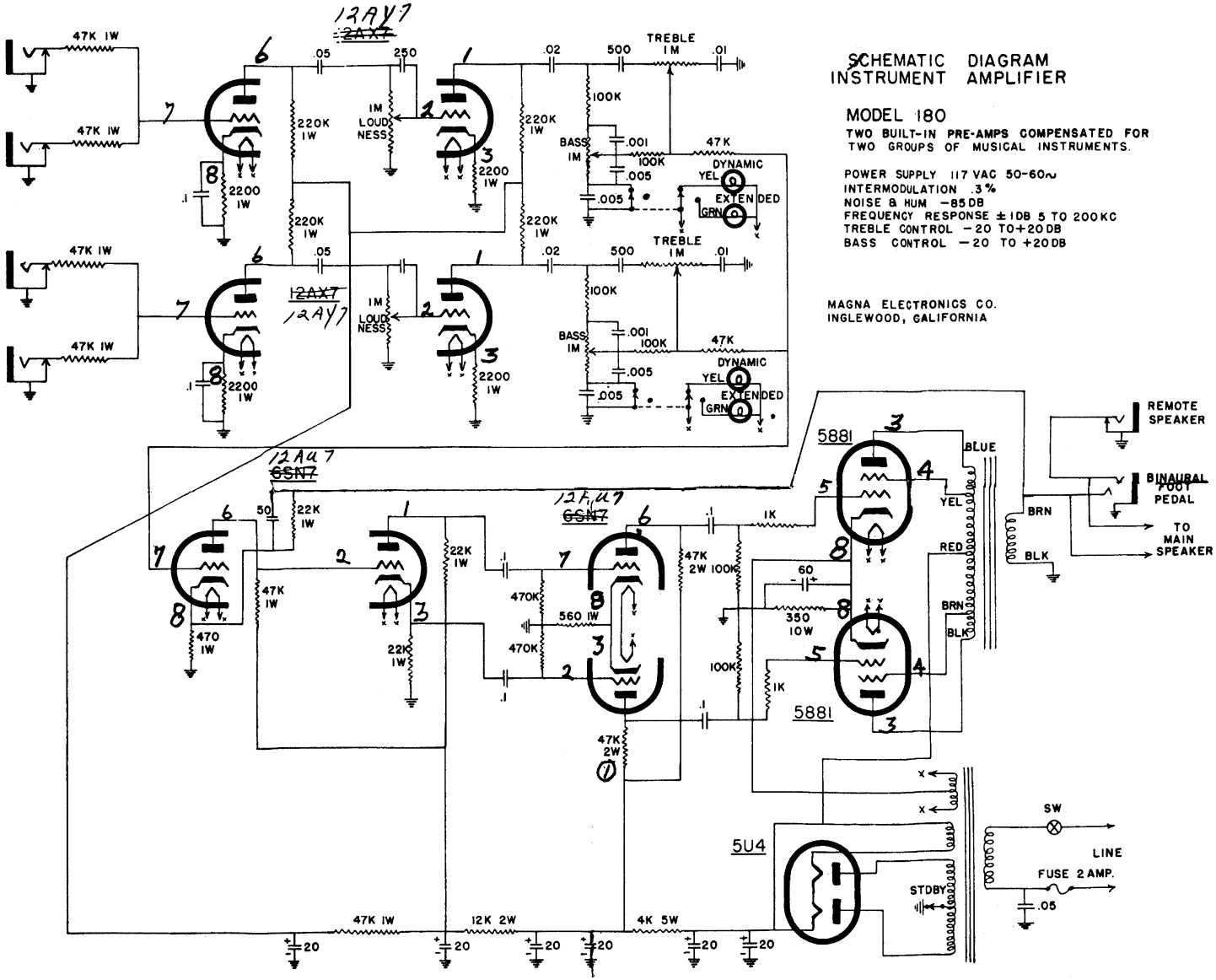
SCHEMATIC DIAGRAM
INSTRUMENT AMPLIFIER
MODEL 180
TWO BUILT-IN PRE-AMPS COMPENSATED FOR TWO GROUPS OF MUSICAL INSTRUMENTS.
POWER SUPPLY 117 VAC 50-60~
INTERMODULATION .3%
NOISE & HUM -85DB
FREQUENCY RESPONSE ±1DB 5 TO 200KC
TREBLE CONTROL -20 TO +20DB
BASS CONTROL -20 TO +20DB
MAGNA ELECTRONICS CO.
INGLEWOOD, CALIFORNIA
12AY7
12AX7
12AU7
6SN7
5881
5U4
TREBLE
BASS
LOUDNESS
DYNAMIC
EXTENDED
YEL
GRN
BLUE
RED
BRN
BLK
REMOTE SPEAKER
BINAURAL FOOT PEDAL
TO MAIN SPEAKER
SW
LINE
FUSE 2 AMP.
STDBY

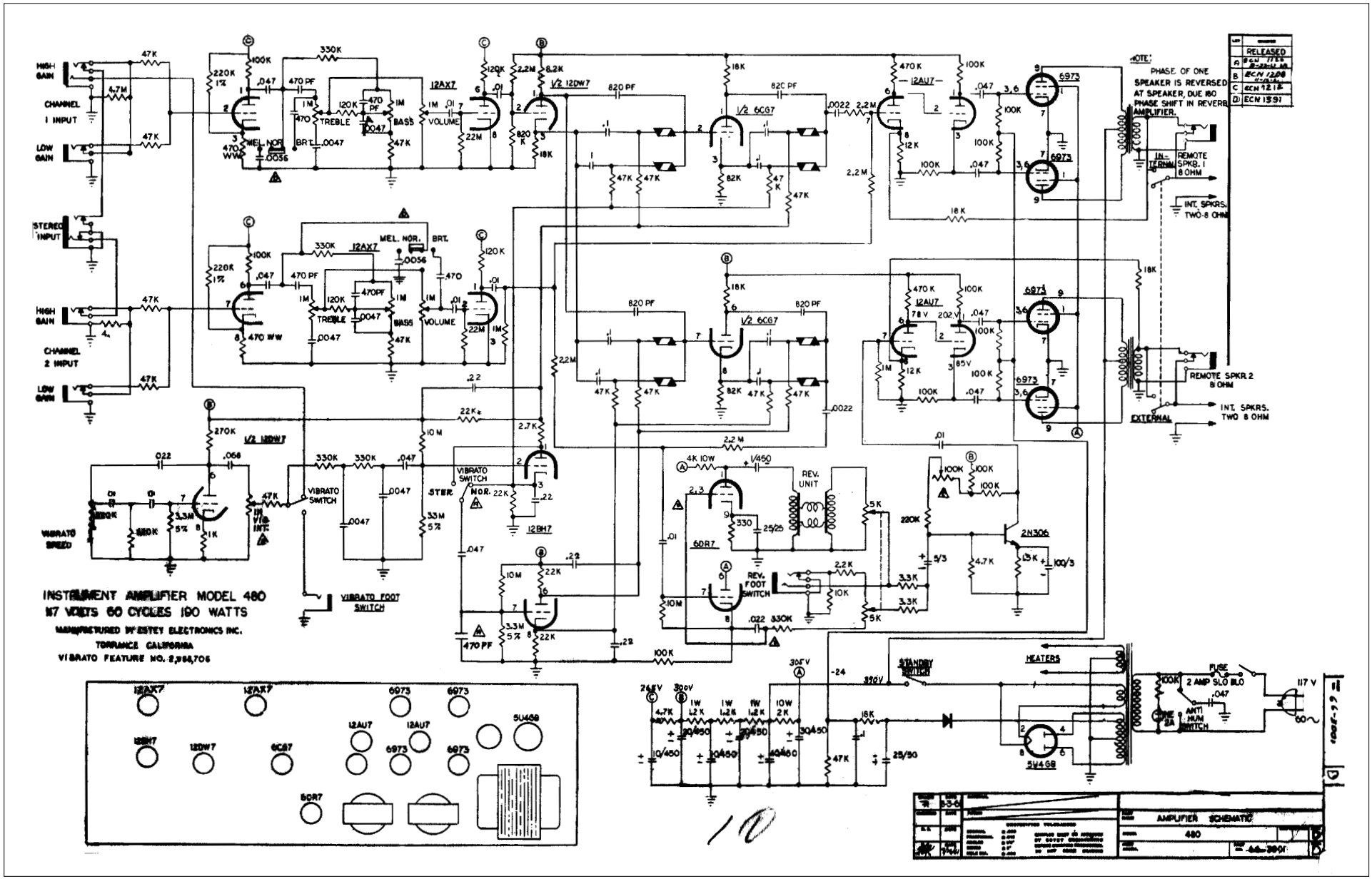
INSTRUMENT AMPLIFIER MODEL 480
117 VOLTS 60 CYCLES 190 WATTS
MANUFACTURED BY ESTEY ELECTRONICS INC.
TORRANCE CALIFORNIA
VIBRATO FEATURE NO. 2,968,706
HIGH GAIN
CHANNEL 1 INPUT
LOW GAIN
STEREO INPUT
CHANNEL 2 INPUT
VIBRATO SPEED
VIBRATO SWITCH
VIBRATO FOOT SWITCH
REV. UNIT
REV. FOOT SWITCH
STANDBY SWITCH
HEATERS
FUSE 2 AMP SLO BLO
ANTI HUM SWITCH
117 V
60~
PHASE OF ONE SPEAKER IS REVERSED AT SPEAKER, DUE 180 PHASE SHIFT IN REVERB AMPLIFIER.
REMOTE SPKR. 1 8 OHM
INT. SPKRS. TWO-8 OHM
REMOTE SPKR. 2 8 OHM
INT. SPKRS. TWO 8 OHM
EXTERNAL
AMPLIFIER SCHEMATIC
480

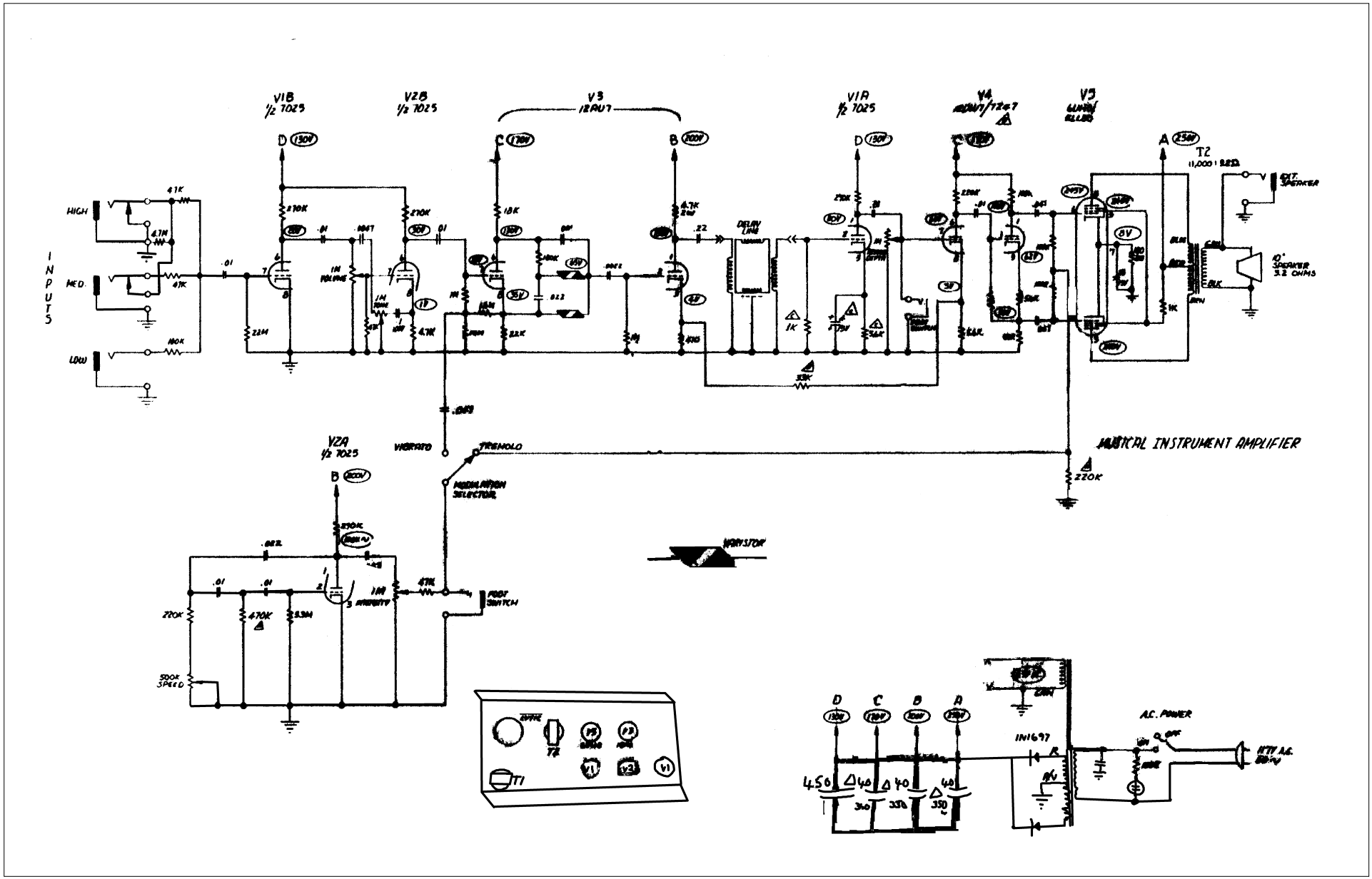
V1B
½ 7025
V2B
½ 7025
V3
12AU7
V1A
½ 7025
V4
V5
V2A
½ 7025
INPUTS
HIGH
MED.
LOW
T2
EXT. SPEAKER
10" SPEAKER 3.2 OHMS
VIBRATO
TREMOLO
MODULATION SELECTOR
FOOT SWITCH
DELAY LINE
MUSICAL INSTRUMENT AMPLIFIER
VARISTOR
A.C. POWER
1N1697
T1

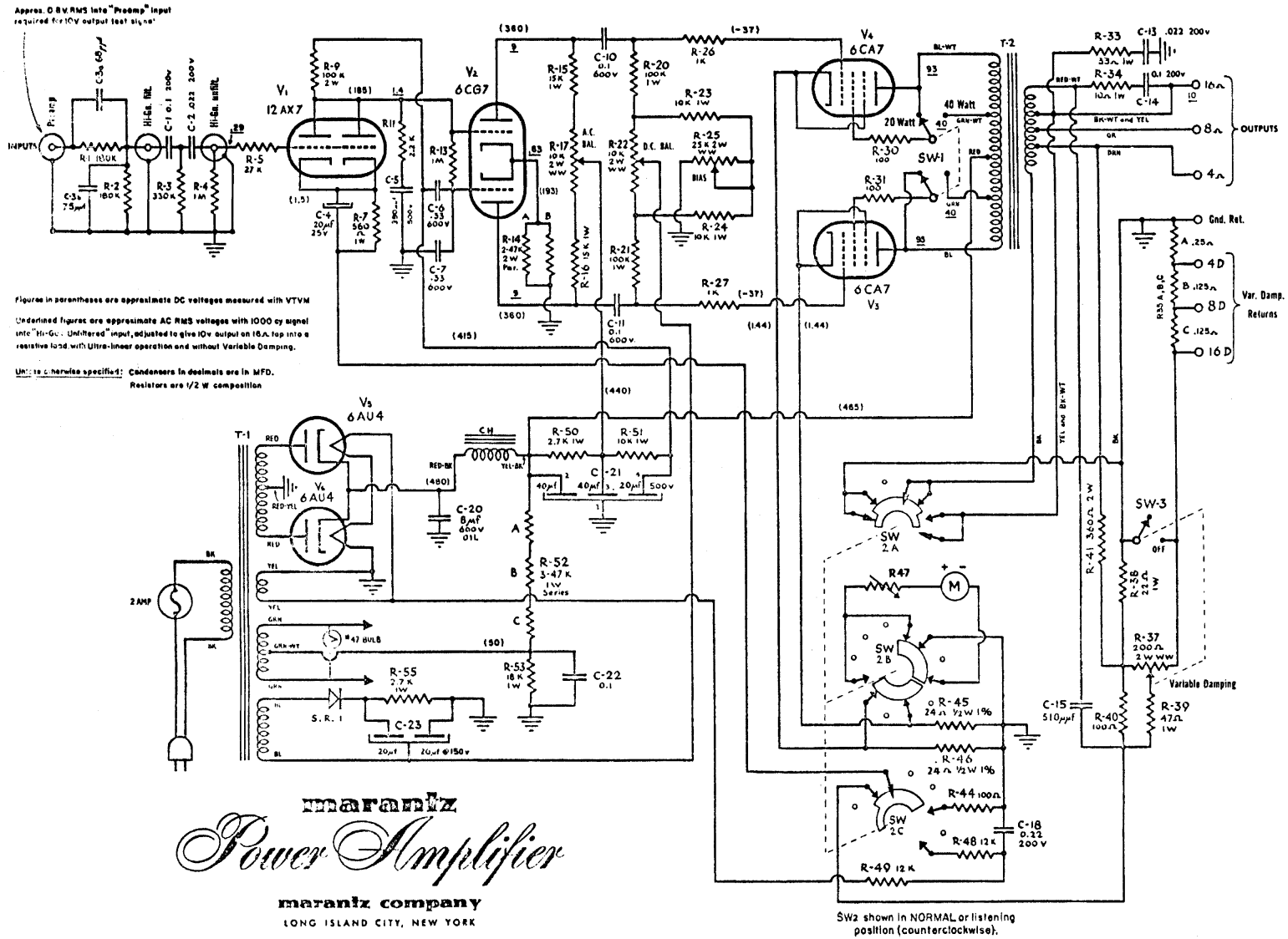
Approx. 0.8 V. RMS into "Preamp" input required for 10V output test signal
INPUTS
Hi-Gain, Bal.
Hi-Gain, unbal.
V1 12AX7
V2 6CG7
V3 6CA7
V4 6CA7
V5 6AU4
V6 6AU4
T-1
T-2
20 Watt
40 Watt
SW-1
SW-3
OUTPUTS
16Ω
8Ω
4Ω
Gnd. Ret.
Var. Damp. Returns
Variable Damping
2 AMP
#47 BULB
S.R. 1
Figures in parentheses are approximate DC voltages measured with VTVM
Underlined figures are approximate AC RMS voltages with 1000 cy signal into "Hi-Gain" Unfiltered" input, adjusted to give 10v output on 16Ω tap into a resistive load with Ultra-linear operation and without Variable Damping.
Unless otherwise specified: Condensers in decimals are in MFD.
Resistors are 1/2 W composition
SW2 shown in NORMAL or listening position (counterclockwise).
maranitz
Power Amplifier
maranitz company
LONG ISLAND CITY, NEW YORK

MARSHALL 100W. VOLT. CHART

TUBE		PIN NO. 1	2	3	4	5	6	7	8	9
ECC83 12AX7A	V1	135	—	1.0	H	H	195	—	1.5	H
ECC83 12AX7A	V2	153	—	1.1	H	H	260	153	153	H
ECC83 12AX7A	V3	210	—	18.5	H	H	195	—	18.5	H
6550 (USA)	V4	—	H	453	450	-51°	NP	H	—	—
6550 (USA)	V5	—	H	453	450	-51°	NP	H	—	—
6550 (USA)	V6	—	H	453	450	-51°	NP	H	—	—
6550 (USA)	V7	—	H	453	450	-51°	NP	H	—	—

*(Bias approx. -51vdc; primary current 1.2-1.3 amps at 120vac)

MARSHALL 200W VOLT CHART

TUBE		PIN NO. 1	2	3	4	5	6	7	8	9
ECC83 12AX7A	V1	190	—	1.75	H	H	235	—	2.4	H
ECC83 12AX7A	V2	210	—	1.6	H	H	300		75	H
ECC82 12AU7	V3	310	—	1.5	H	H	310	—	15	H
KT88	V4	—	H	620	620	-85	—	H	—	—
KT88	V5	—	H	620	620	-85	—	H	—	—
KT88	V6	—	H	620	620	-85	—	H	—	—
KT88	V7	—	H	620	620	-85	—	H	—	—
	V8									

MARSHALL 50W. VOLT. CHART

MK 2

TUBE		PIN NO. 1	2	3	4	5	6	7	8	9
ECC83 12AX7A	V1	100	—	2.9	H	H	205	—	2	H
ECC83 12AX7A	V2	150	—	1	H	H	290	150	150	H
ECC83 12AX7A	V3	210	—	40	H	H	200	—	40	H
6550 (USA)	V4	—	H	395	390	-44	NP	H	0	—
6550 (USA)	V5	—	H	395	390	-44	NP	H	0	—

BIAS APPROX. -44 V. PRI. CURRENT 0.7 TO 0.8 AMPS.

MARSHALL 100W. VOLT. CHART

TUBE		PIN NO. 1	2	3	4	5	6	7	8	9
ECC83 12AX7A	V1	165	—	1.0	H	H	165	—	1.5	H
ECC83 12AX7A	V2	175	—	1.1	H	H	305	175	175	H
ECC83 12AX7A	V3	230	—	24	H	H	230	—	24	H
EL34 6CA7	V4	—	H	530	520	-50	NP	H	—	—
EL34 6CA7	V5	—	H	530	520	-50	NP	H	—	—
EL34 6CA7	V6	—	H	530	520	-50	NP	H	—	—
EL34 6CA7	V7	—	H	530	520	-50	NP	H	—	—
	V8			530	520	-50				

MARSHALL 50W. VOLT. CHART

TUBE		PIN NO. 1	2	3	4	5	6	7	8	9
ECC83 12AX7A	V1	180	—	1.6	H	H	160	—	1.6	H
ECC83 12AX7A	V2	140	—	1	H	H	250	140	140	H
ECC83 12AX7A	V3	220	—	40	H	H	210	—	40	H
EL34 6CA7	V4	—	H	380	390	-30	—	H	—	—
EL34 6CA7	V5	—	H	380	390	-30	—	H	—	—
GZ34-5AR4 SOME MODELS	V6	—	H	320 AC	—	320 AC	—	—	400	—
HAVE SOLID STATE REC.	V7									
	V8									

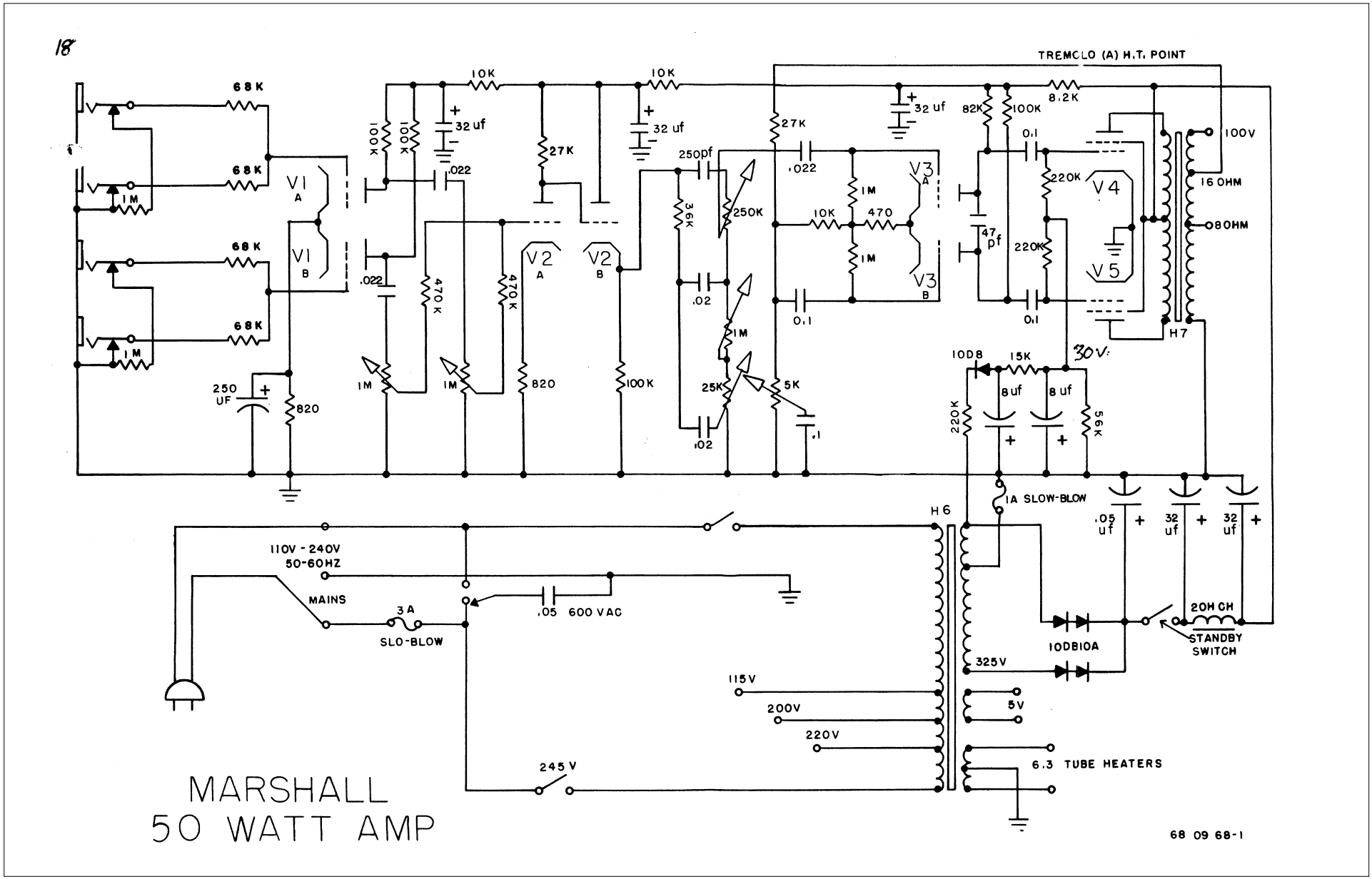
18
TREMOLO (A) H.T. POINT
68 K
68 K
1 M
68 K
68 K
1 M
V1 A
V1 B
250 UF
820
10K
100 K
100 K
32 uf
.022
.022
470 K
1M
1M
27K
470 K
V2 A
820
10K
32 uf
V2 B
100K
250pf
3.6K
250K
.02
1M
25K
.02
27K
.022
1M
10K
470
1M
V3 A
V3 B
0.1
5K
.1
32 uf
82K
100K
8.2K
0.1
220K
V4
47 pf
220K
V5
0.1
100V
16 OHM
8 OHM
H7
30V.
10D8
15K
8 uf
8 uf
220K
56K
1A SLOW-BLOW
H6
.05 uf
32 uf
32 uf
110V - 240V
50-60HZ
MAINS
3A
SLO-BLOW
.05 600 VAC
20H CH
STANDBY SWITCH
10DB10A
325V
115V
200V
220V
5V
245 V
6.3 TUBE HEATERS
MARSHALL
50 WATT AMP
68 09 68-1

50w MASTER VOL **(MODEL 2204)**

Marshall

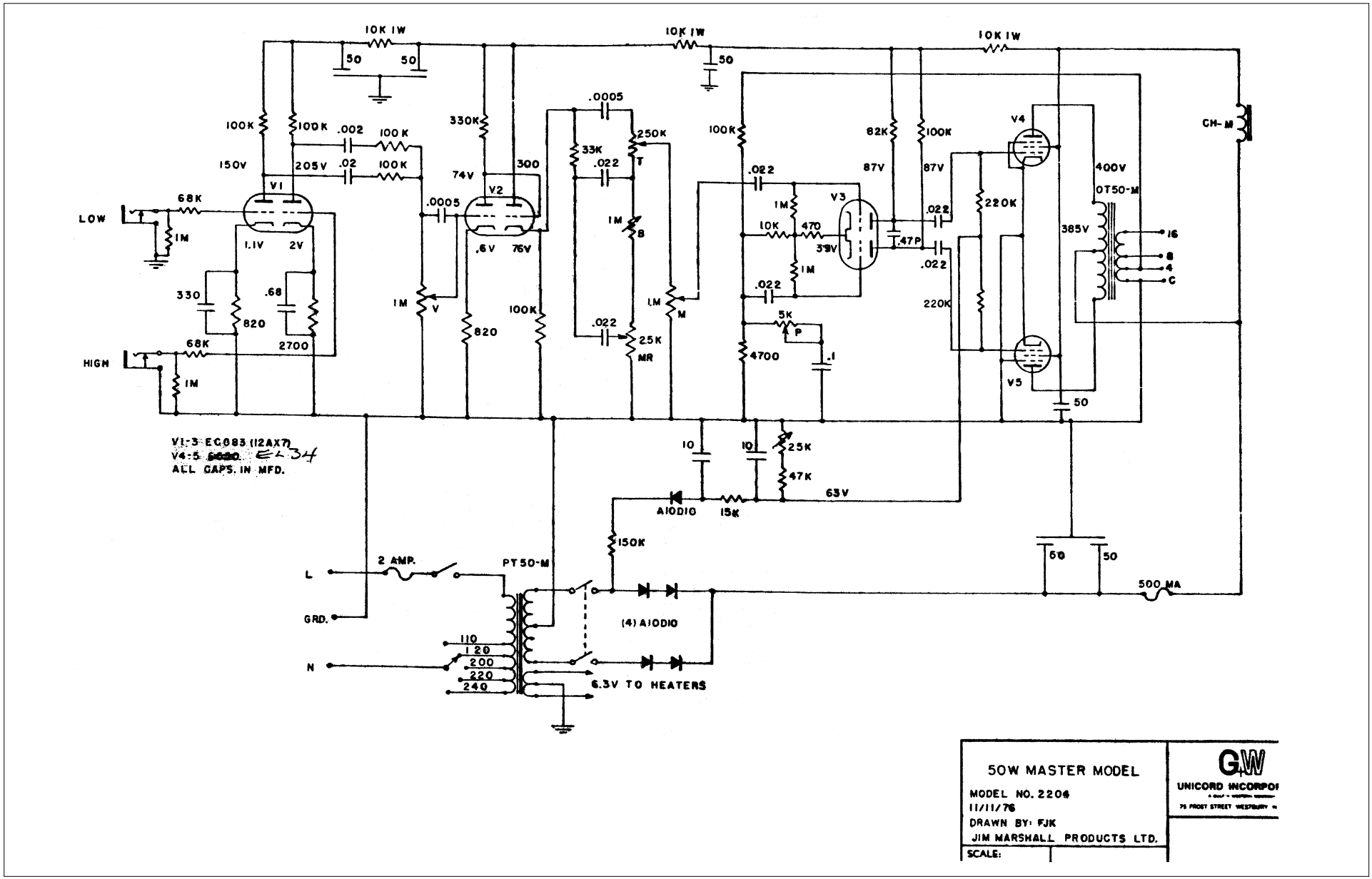

50W MASTER MODEL

MODEL NO. 2204
11/11/76
DRAWN BY: FJK
JIM MARSHALL PRODUCTS LTD.
SCALE:

GW
UNICORD INCORPO
75 FROST STREET WESTBURY

50w MASTER VOL **(MODEL 2204) REV**

Marshall

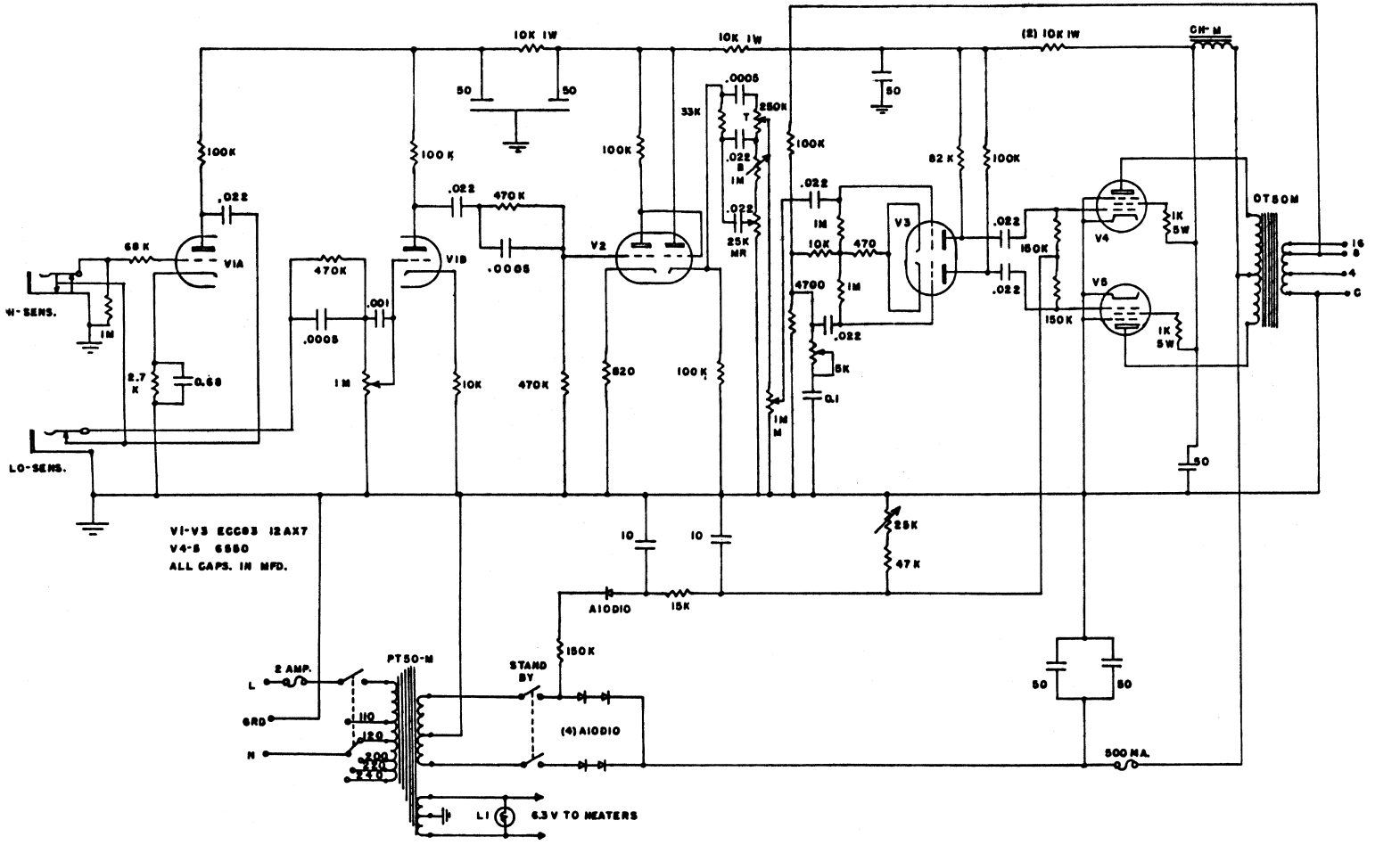

50 W MASTER VOLUME MODEL NO. 2204 2/26/78 JIM MARSHALL PRODUCTS LTD.	Unicord
SCALE:	

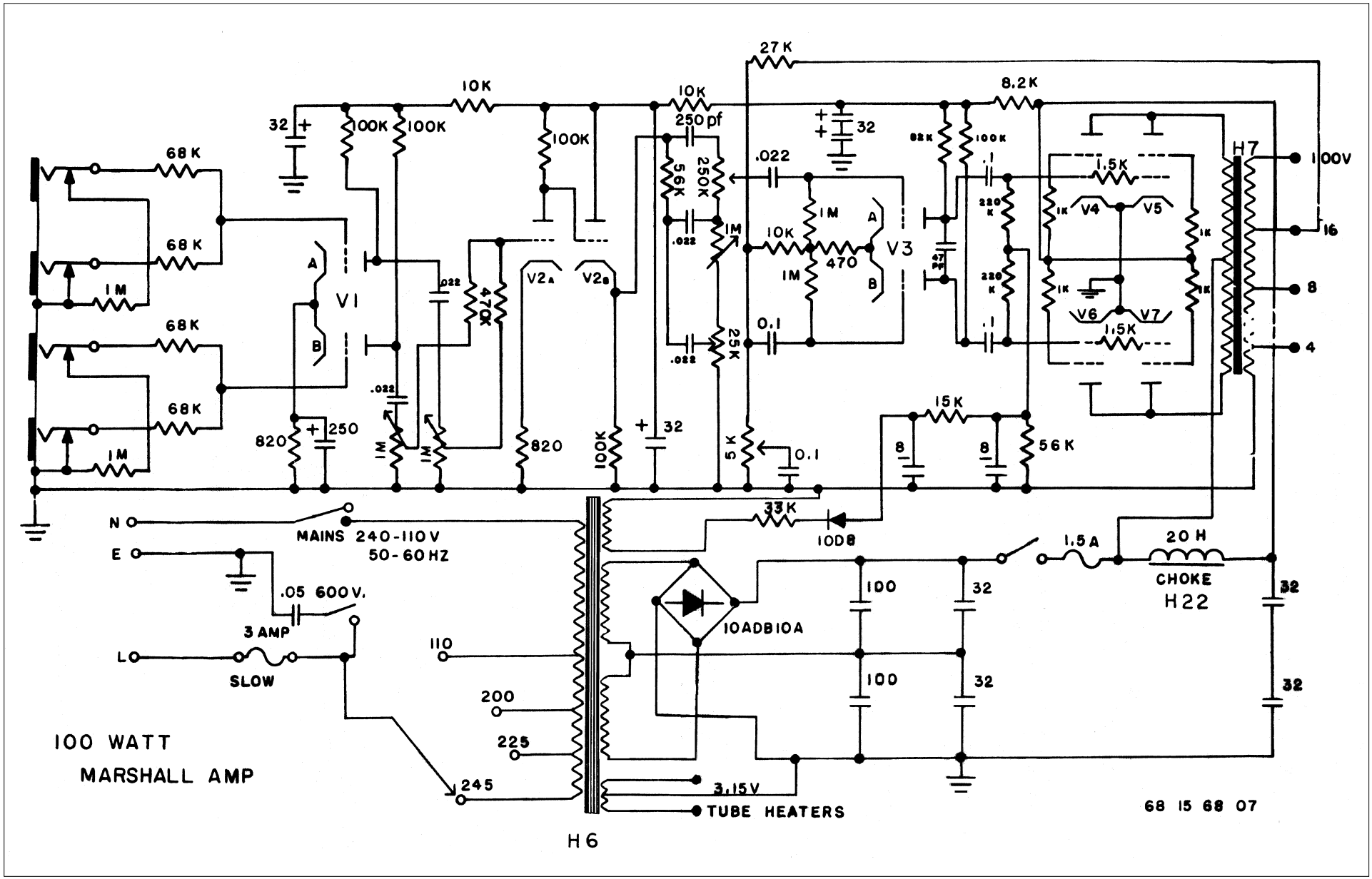
27 K
10K
10K
8.2K
32
100K
100K
100K
250 pf
68 K
68 K
68 K
68 K
1 M
1 M
1 M
1 M
V1
A
B
.022
470K
V2A
V2B
56K
250K
.022
.022
25K
.022
.022
1M
1M
10K
470
V3
A
B
.022
32
82K
100K
.1
220 K
220 K
.1
1.5K
1K
V4
V5
1K
1K
V6
V7
1.5K
H7
100V
16
8
4
820
250
820
100K
32
5 K
0.1
0.1
15K
8
8
56 K
33K
10D8
N
E
L
MAINS 240-110 V
50-60 HZ
.05 600V.
3 AMP
SLOW
110
200
225
245
10ADB10A
100
100
32
32
1.5 A
20 H
CHOKE
H22
32
32
3.15V
TUBE HEATERS
100 WATT
MARSHALL AMP
H6
68 15 68 07

100w **PA (MODEL 1968)**

Marshall

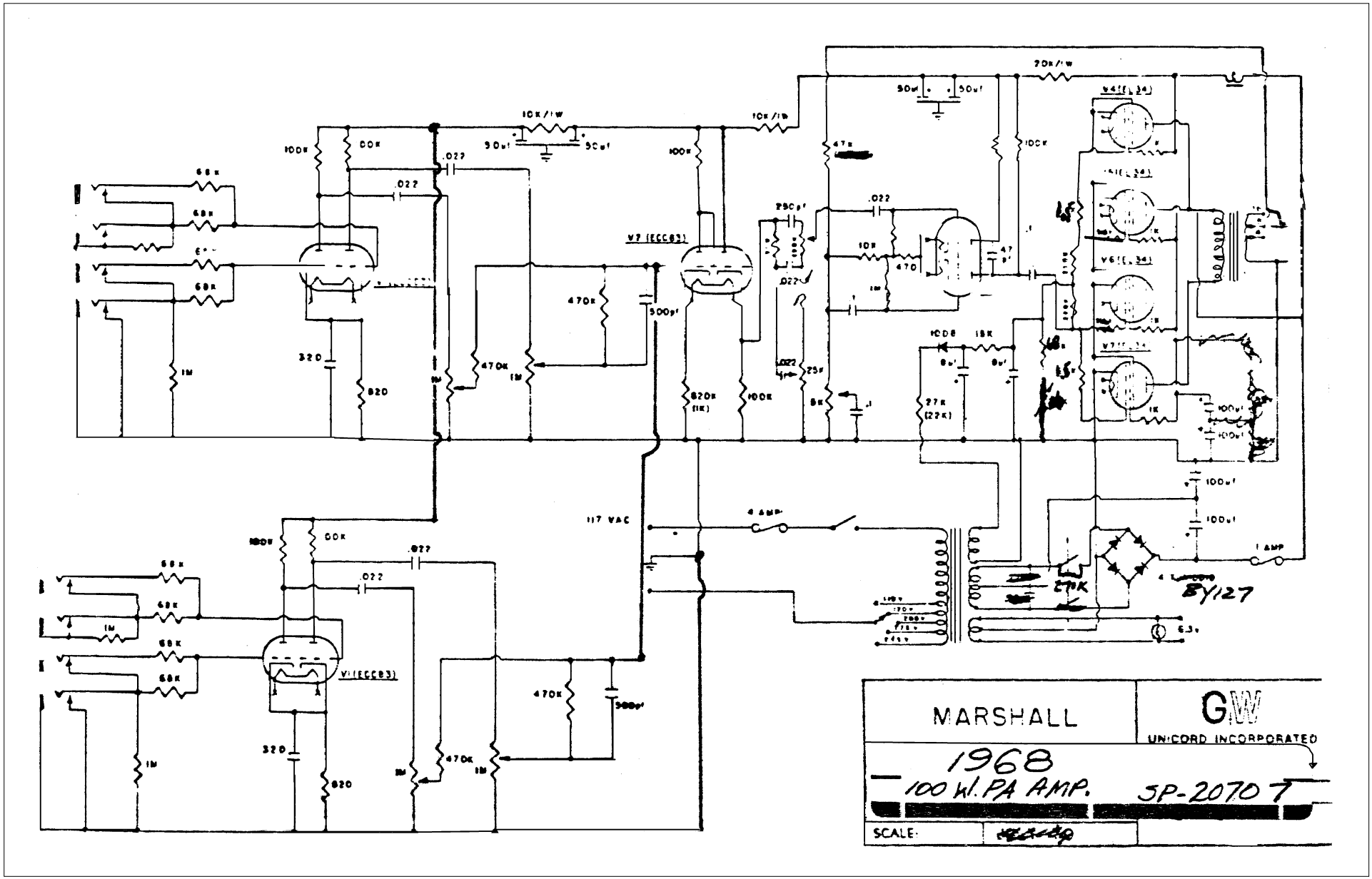

200w **PA (MODEL 1966)**

Marshall

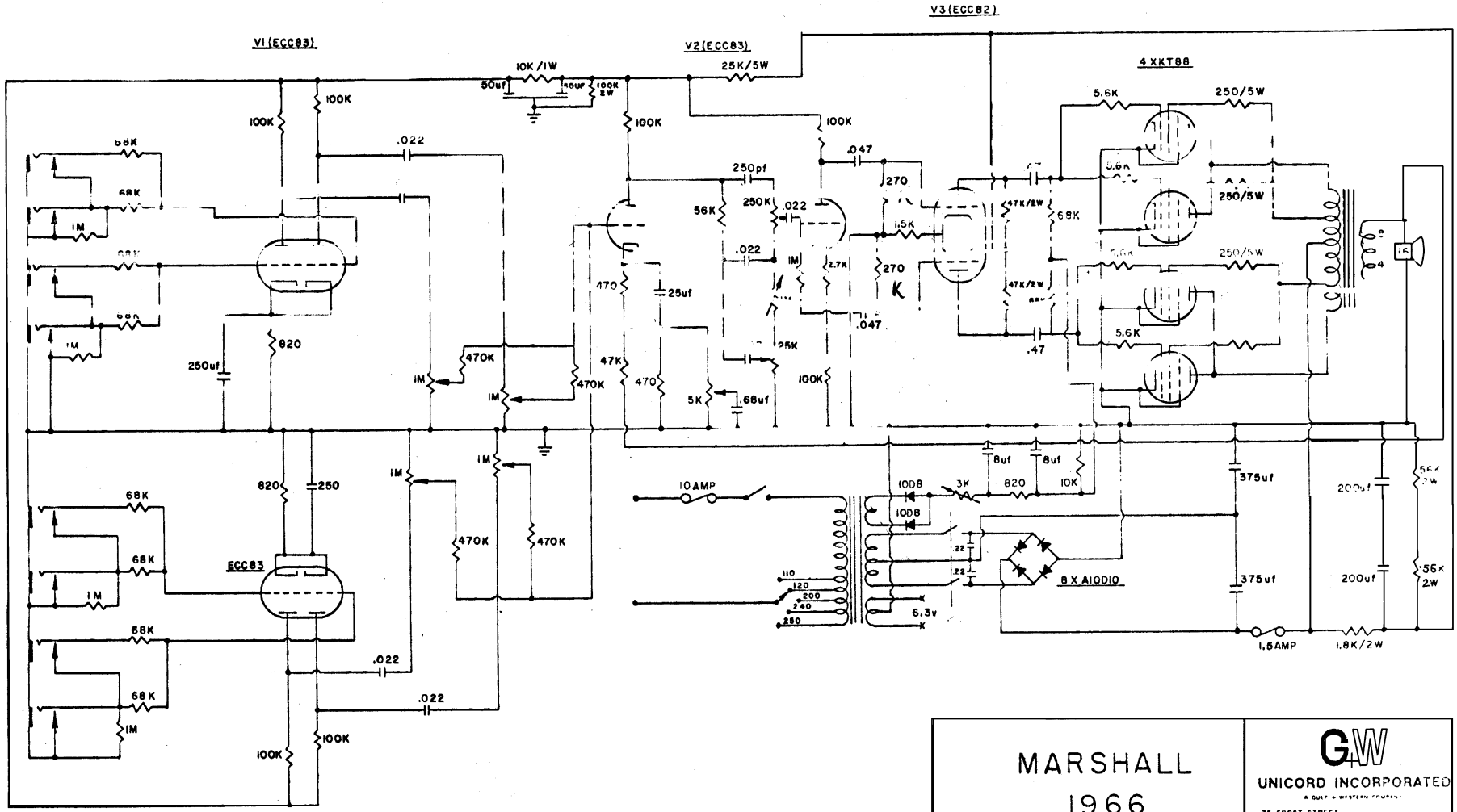

BASS AMP **(MODEL 1992)**

Marshall

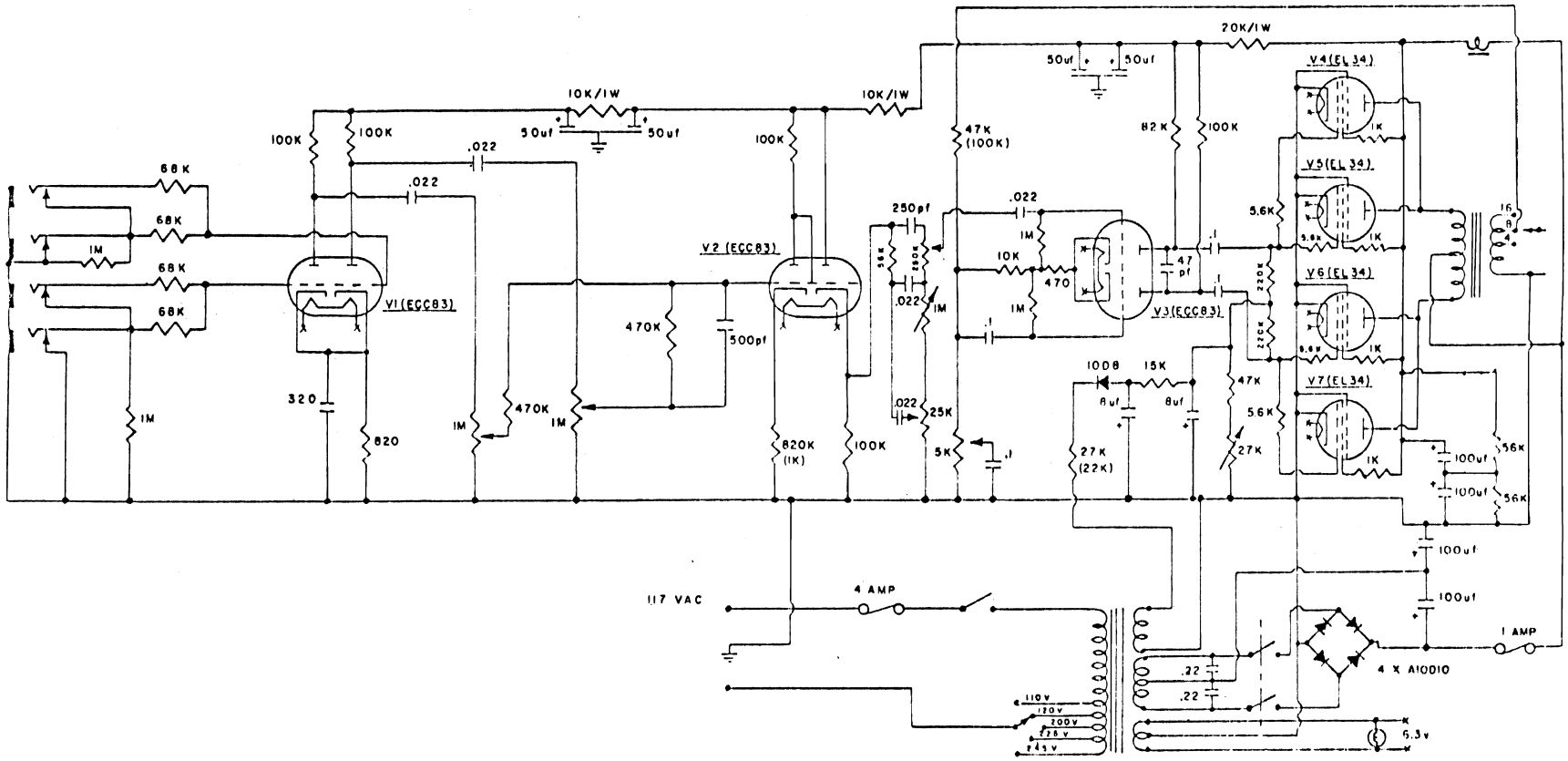

MARSHALL

1992

BASS

SCALE:

JULY 70

GW

UNICORD INCORPORATED

75 FROST STREET WESTBURY N.Y. 11590

70-13-11

BLUESBREAKER REISSUE **(MODEL 1962)**

Marshall

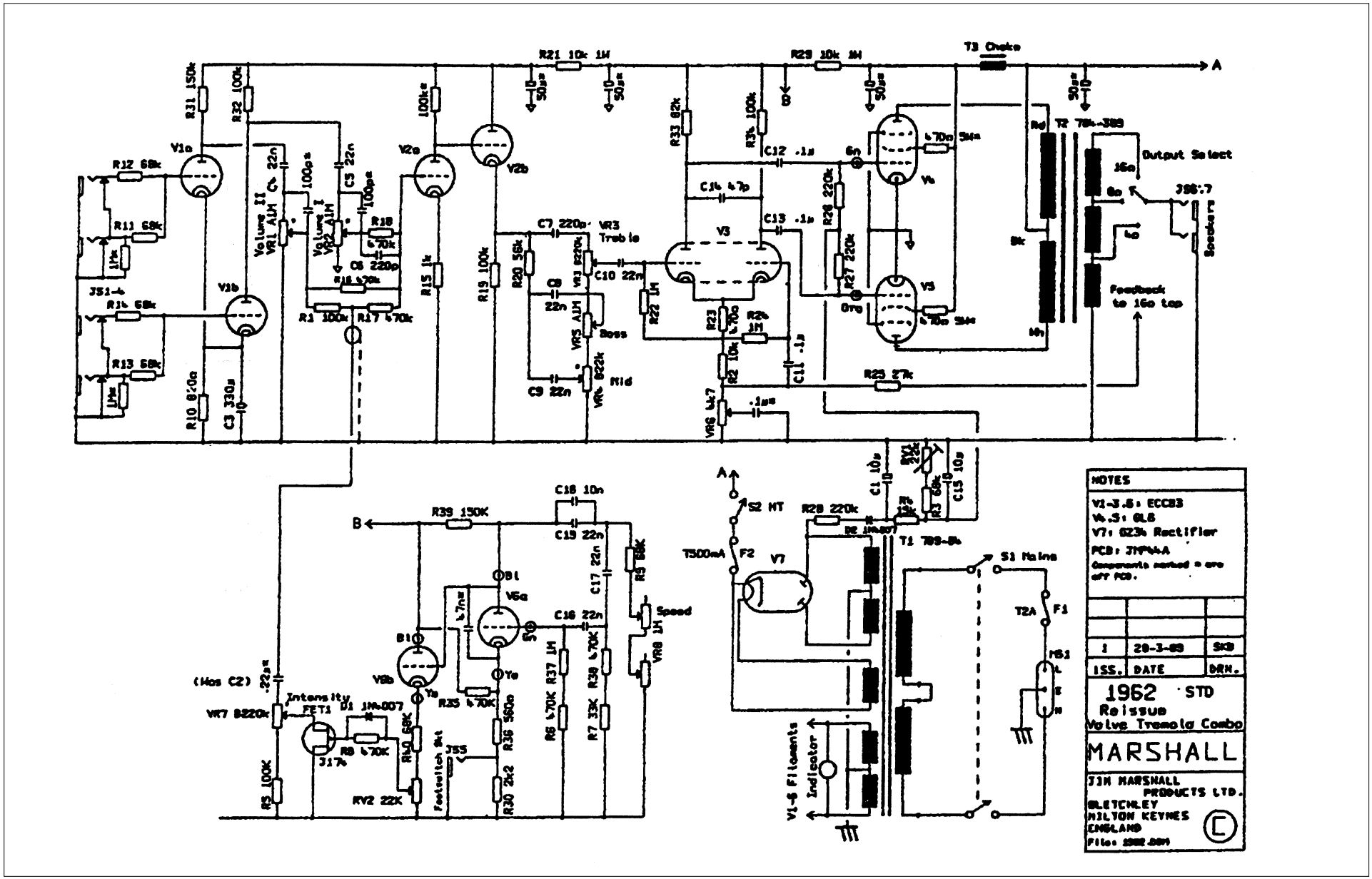

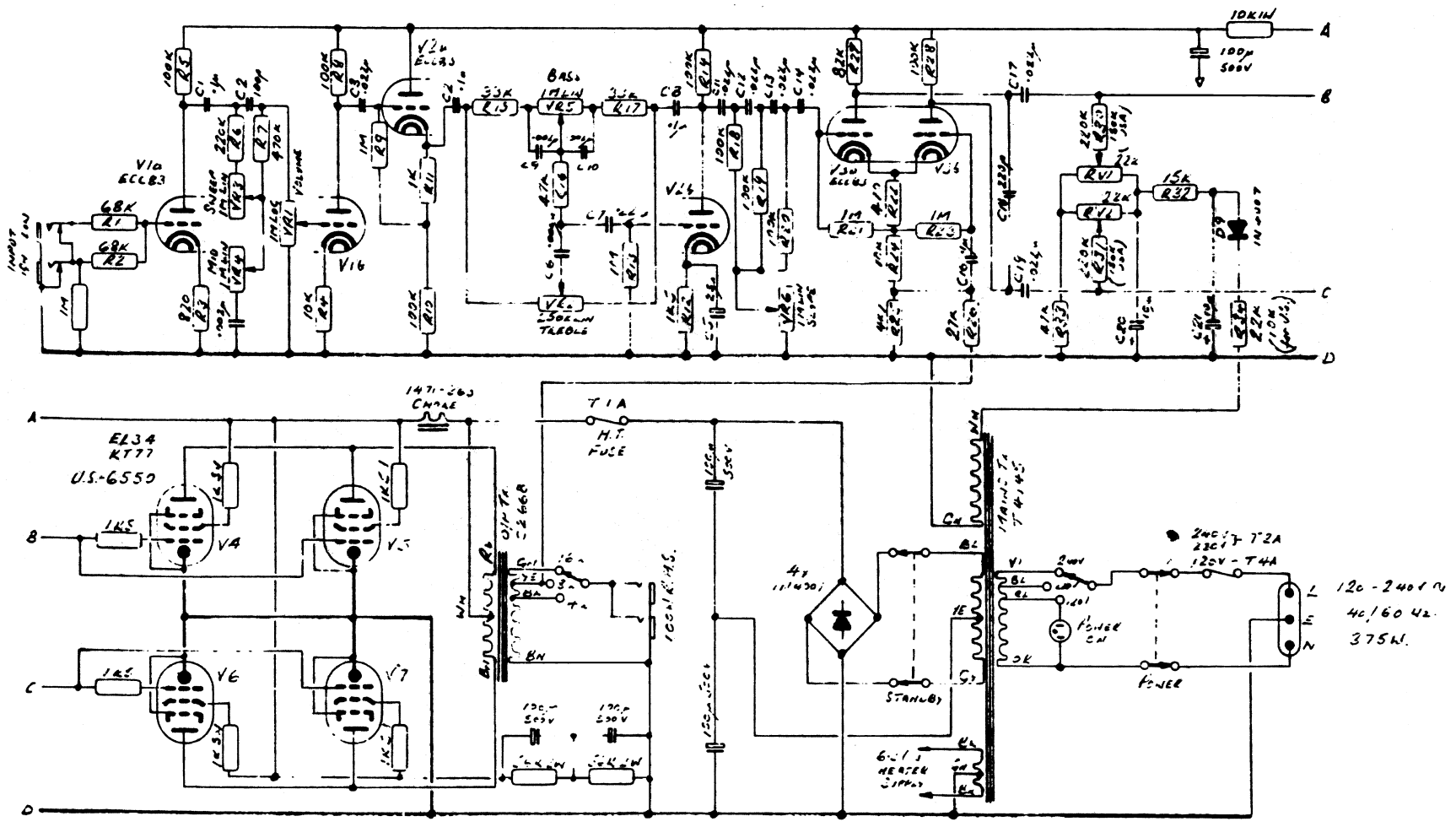

Marshall **JCM 800 Series Model 1992 100W BASS AMP — CIRCUIT DIAGRAM**

1	23-4-81	SG

© JIM MARSHALL PRODUCTS LTD BLETCHLEY ENGLAND

JCM 800 LEAD **(50w & 100w PWR)**

Marshall

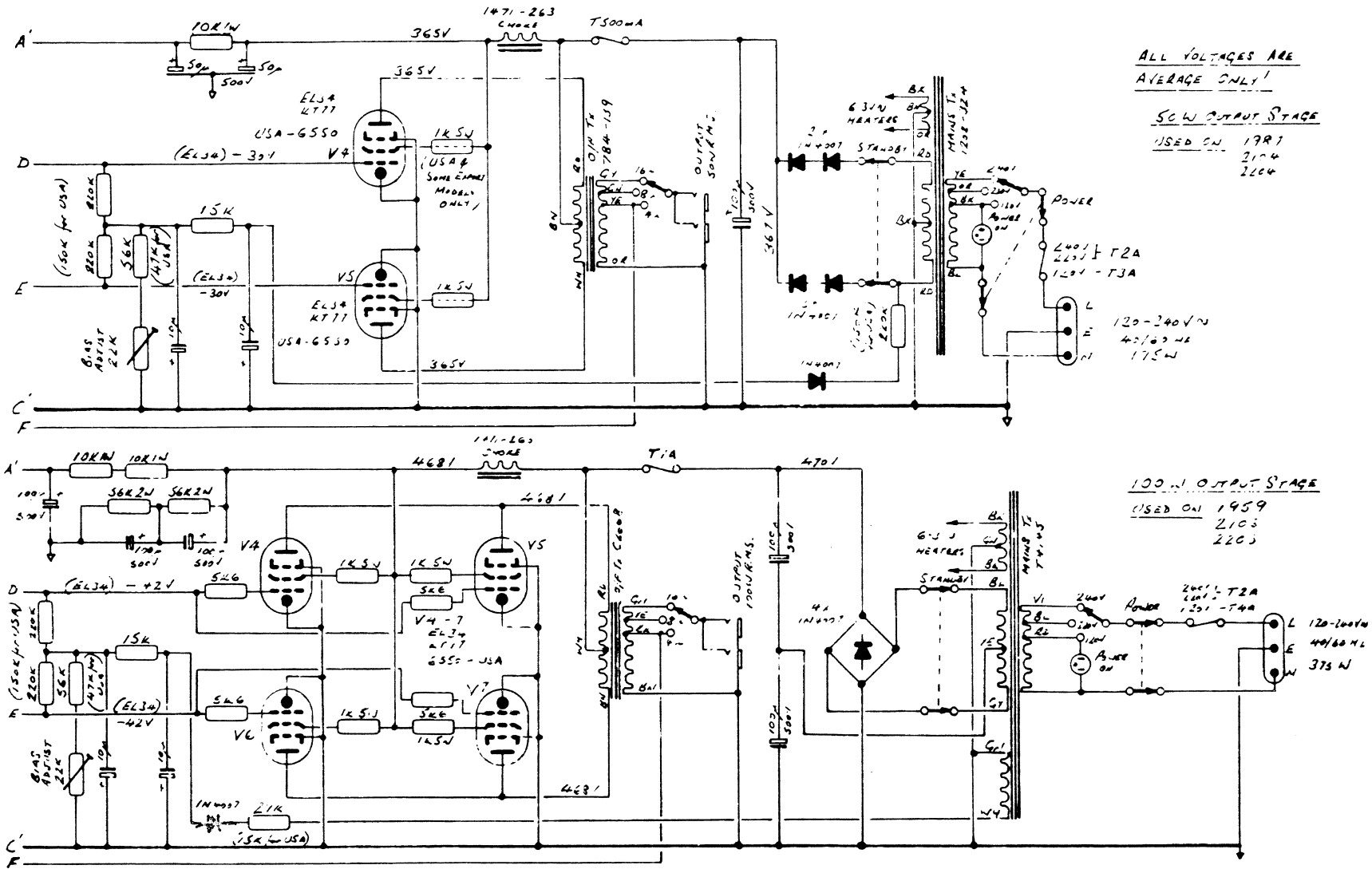

Marshall JCM 800 LEAD SERIES 50W & 100W POWER CIRCUIT DIAGRAM — STANDARD & MASTER VOLUME

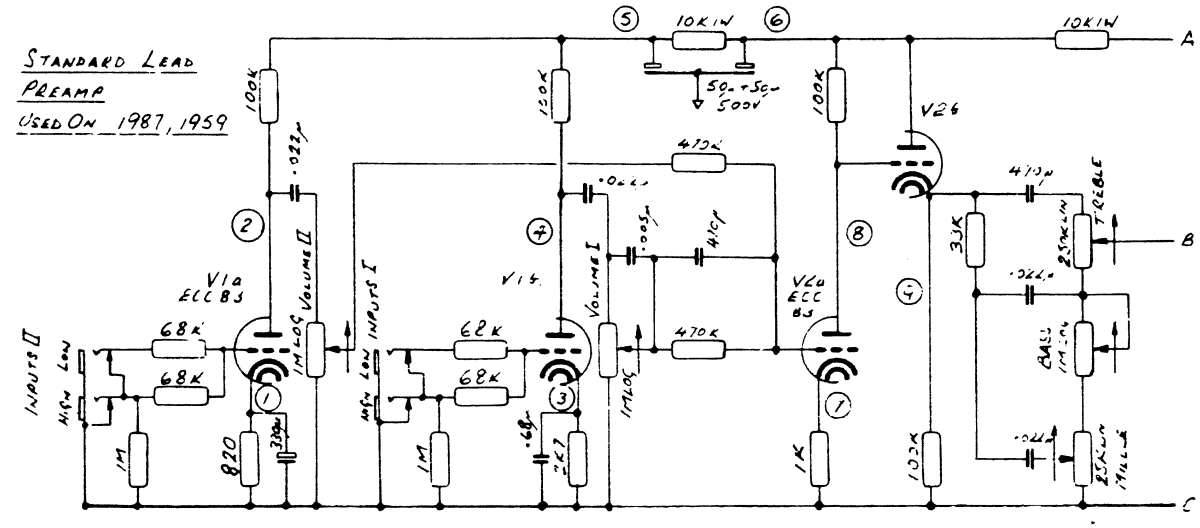

	50W		100W	
No.	STANDARD	MV	STANDARD	MV
1	0·8V	2·4V	1V	2·6V
2	135V	230V	150V	250V
3	1·63V	1·6V	1·7V	1·75V
4	190V	192V	200V	210V
5	250V	256V	260V	280V
6	260V	264V	275V	290V
7	1V	0·9V	1·2V	1V
8	145V	150V	160V	165V
9	141V	152V	162V	167V
10	295V	300V	320V	330V
11	23V	23V	24V	24V
12	185V	192V	205V	220V
13	175V	182V	195V	210V
14	24V	24V	25V	25V
15	37·5V	37·5V	37·5V	37·5V
16	36·5V	36·5V	36·5V	36·5V
17	11V	11V	11V	11V

NOTE: ALL VOLTAGES ARE AVERAGE ONLY

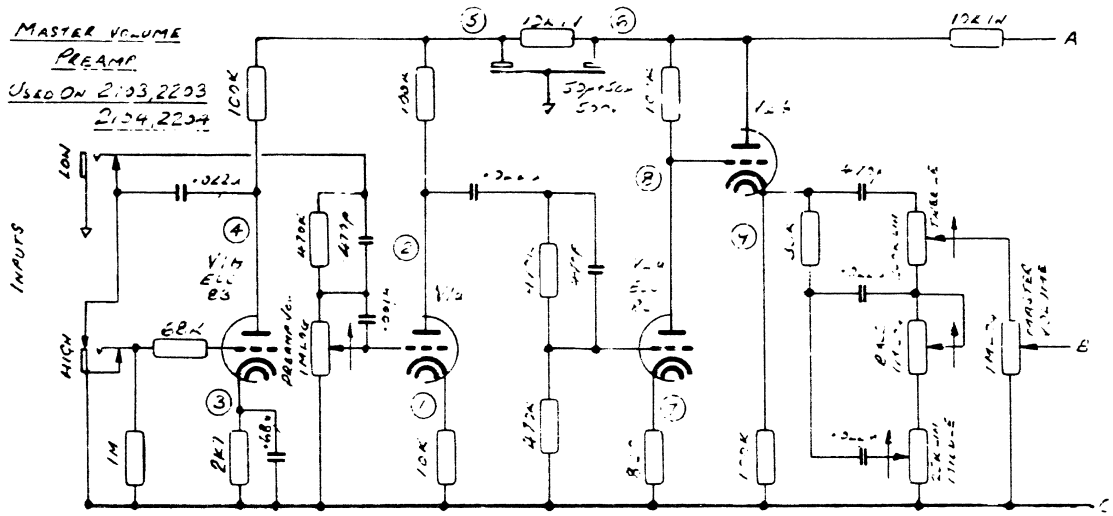

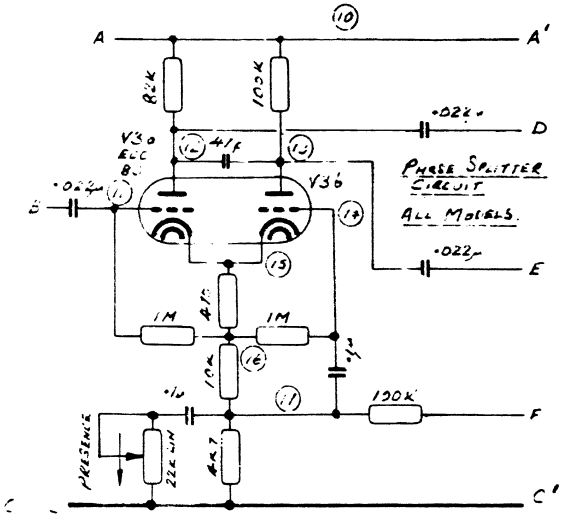

Marshall JCM 800 LEAD SERIES 50W & 100W PREAMP CIRCUIT DIAGRAM — STANDARD & MASTER VOLUME

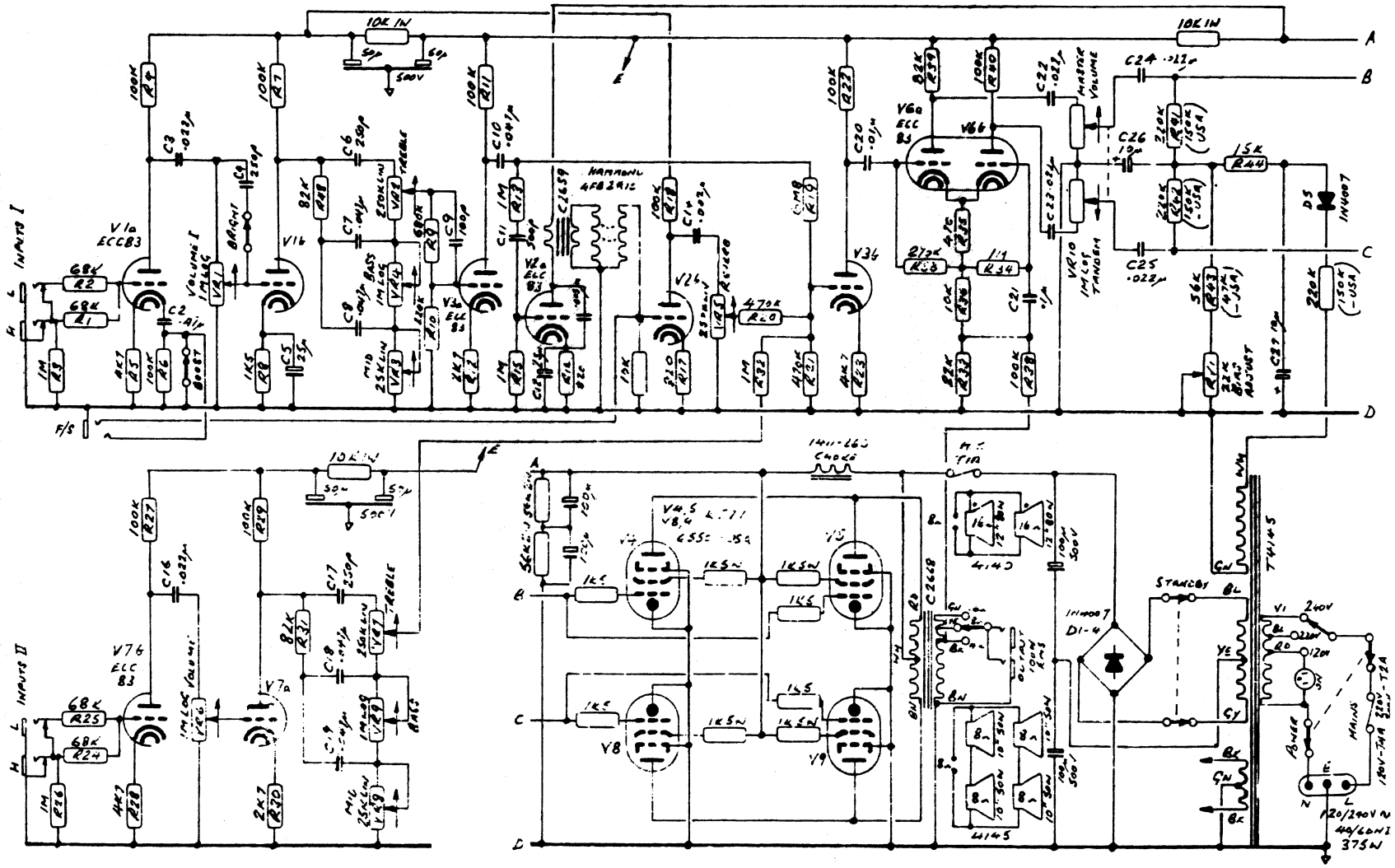

Marshall JCM 800 Series Models 4140, 4145 REVERB AMP — CIRCUIT DIAGRAM

MAJOR 200w

Marshall

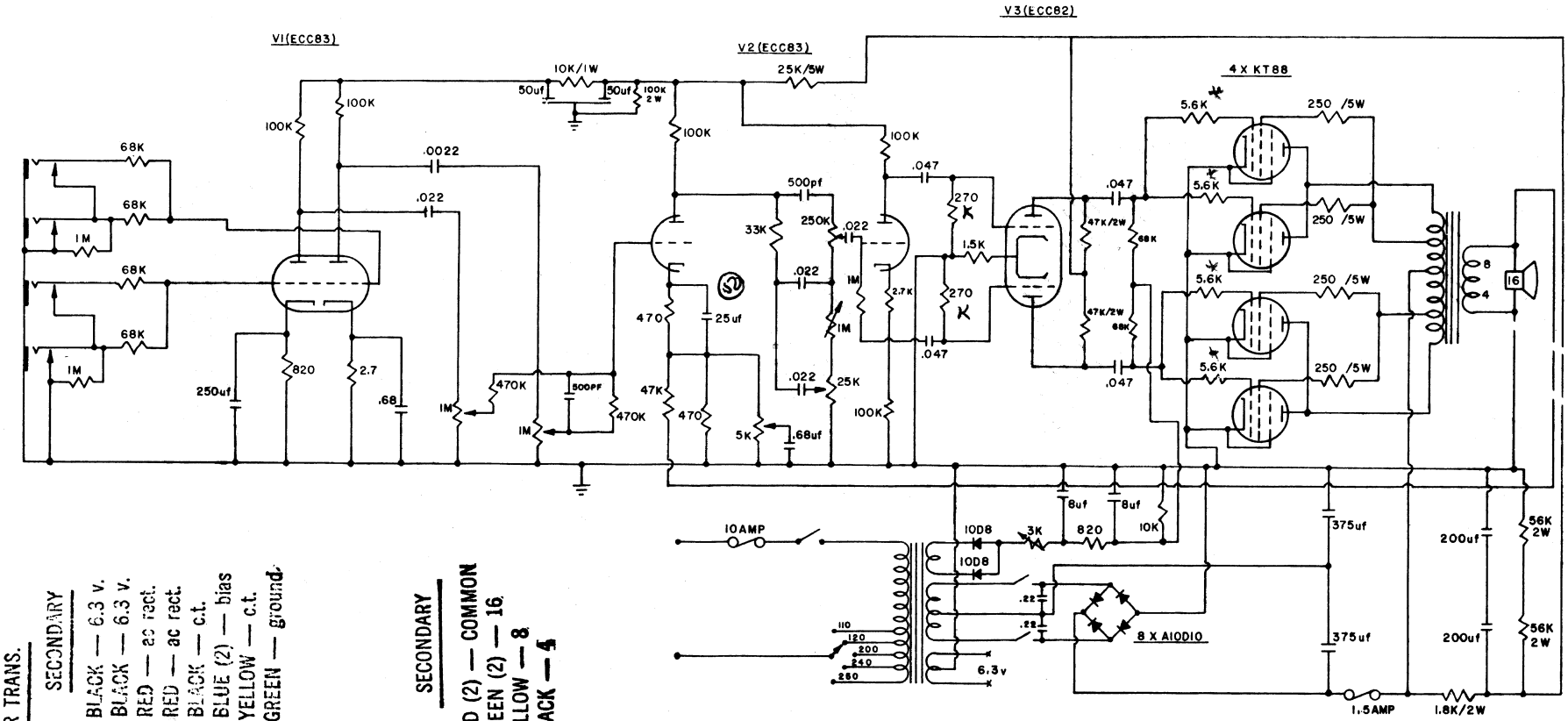

200 WATT POWER TRANS.

PRIMARY

YELLOW — common
WHITE — 110
RED (2) — 120
BROWN — 230
BLUE — 225
VIOLET — 245

SECONDARY

BLACK — 6.3 v.
BLACK — 6.3 v.
RED — ac rect.
RED — ac rect.
BLACK — c.t.
BLUE (2) — bias
YELLOW — c.t.
GREEN — ground

PRIMARY

YELLOW — C.T.
BLUE — SCREEN
BROWN — SCREEN
ORANGE — PLATE
BLACK — PLATE

SECONDARY

RED (2) — COMMON
GREEN (2) — 16
YELLOW — 8
BLACK — 4

MARSHALL
1967
LEAD

SCALE:
JULY 70

GW
UNICORD INCORPORATED
A GULF + WESTERN COMPANY
75 FROST STREET, WESTBURY, N. Y. 11590

70-02-12

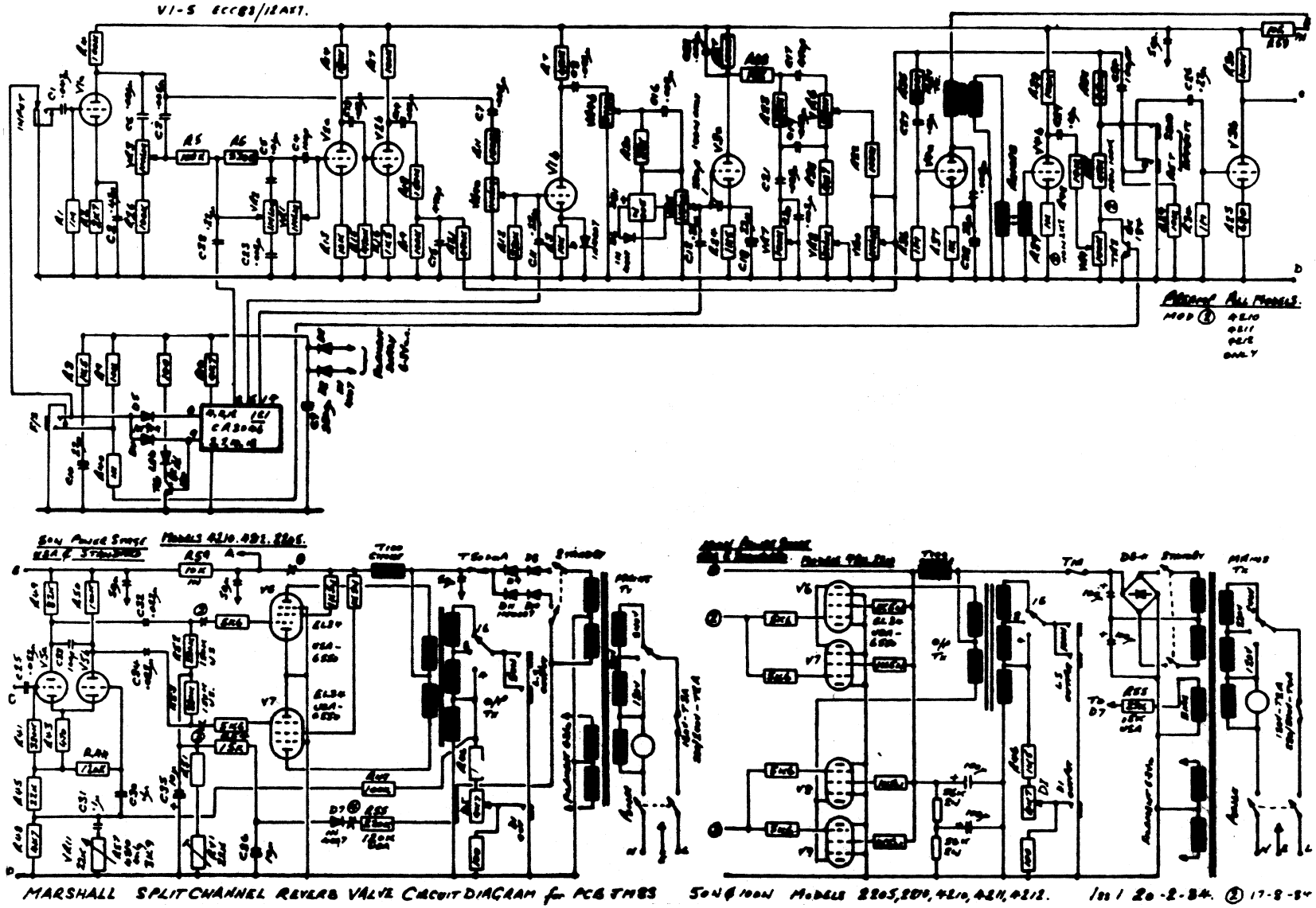
V1-5 ECC83/12AX7.
MARSHALL SPLIT CHANNEL REVERB VALVE CIRCUIT DIAGRAM for PCB TM83
50W & 100W MODELS 2205, 2810, 4210, 4211, 4212.

REVERB **(2210 HEAD/4211 COMBO)**

Marshall

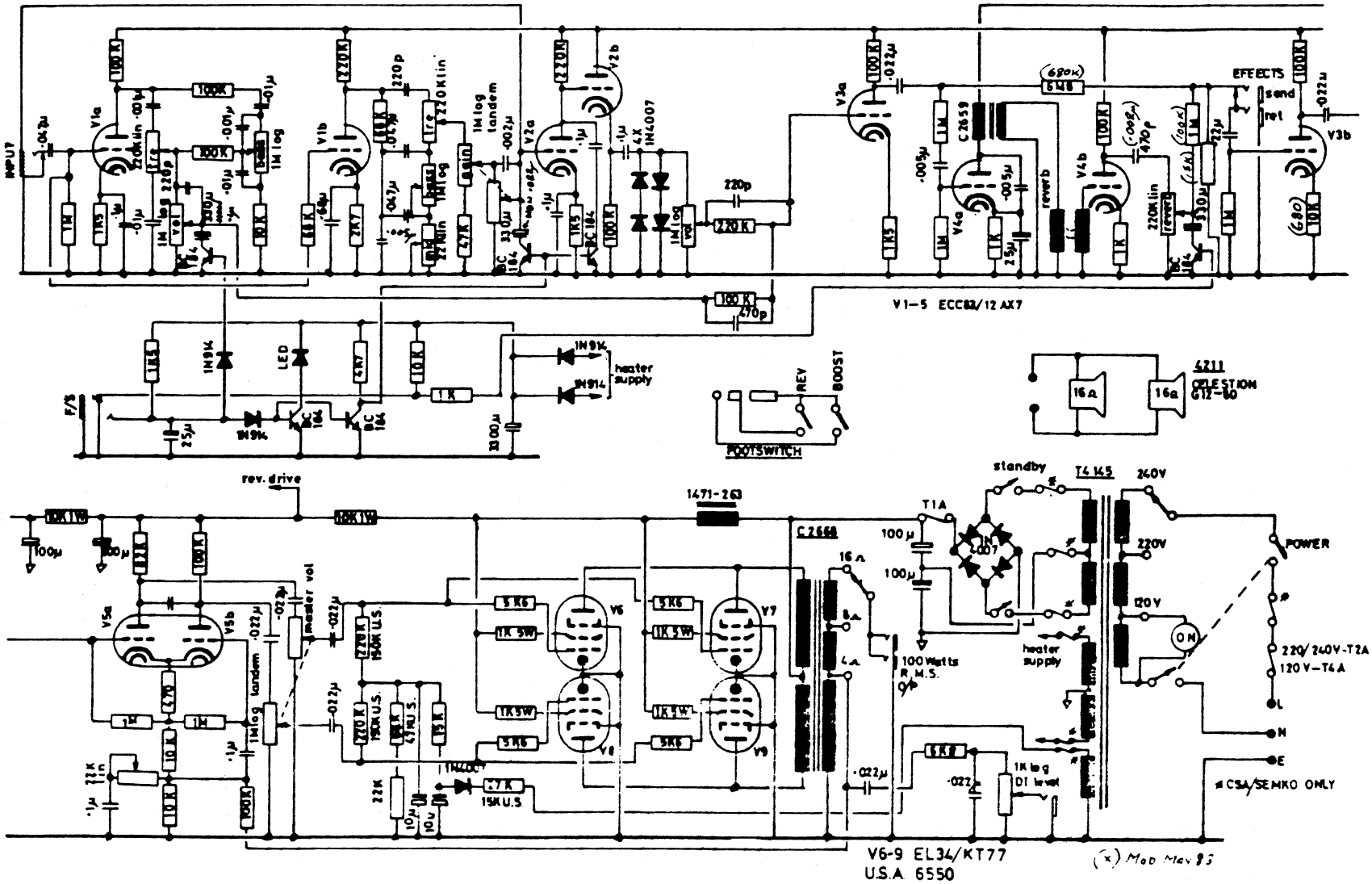

MARSHALL 100 WATT SPLIT CHANNEL REVERB COMBO MODEL 4211 AMP HEAD MODEL 2210 iss1 15-9-82 S.G.

STUDIO 15 **(MODEL 4001)**

Marshall

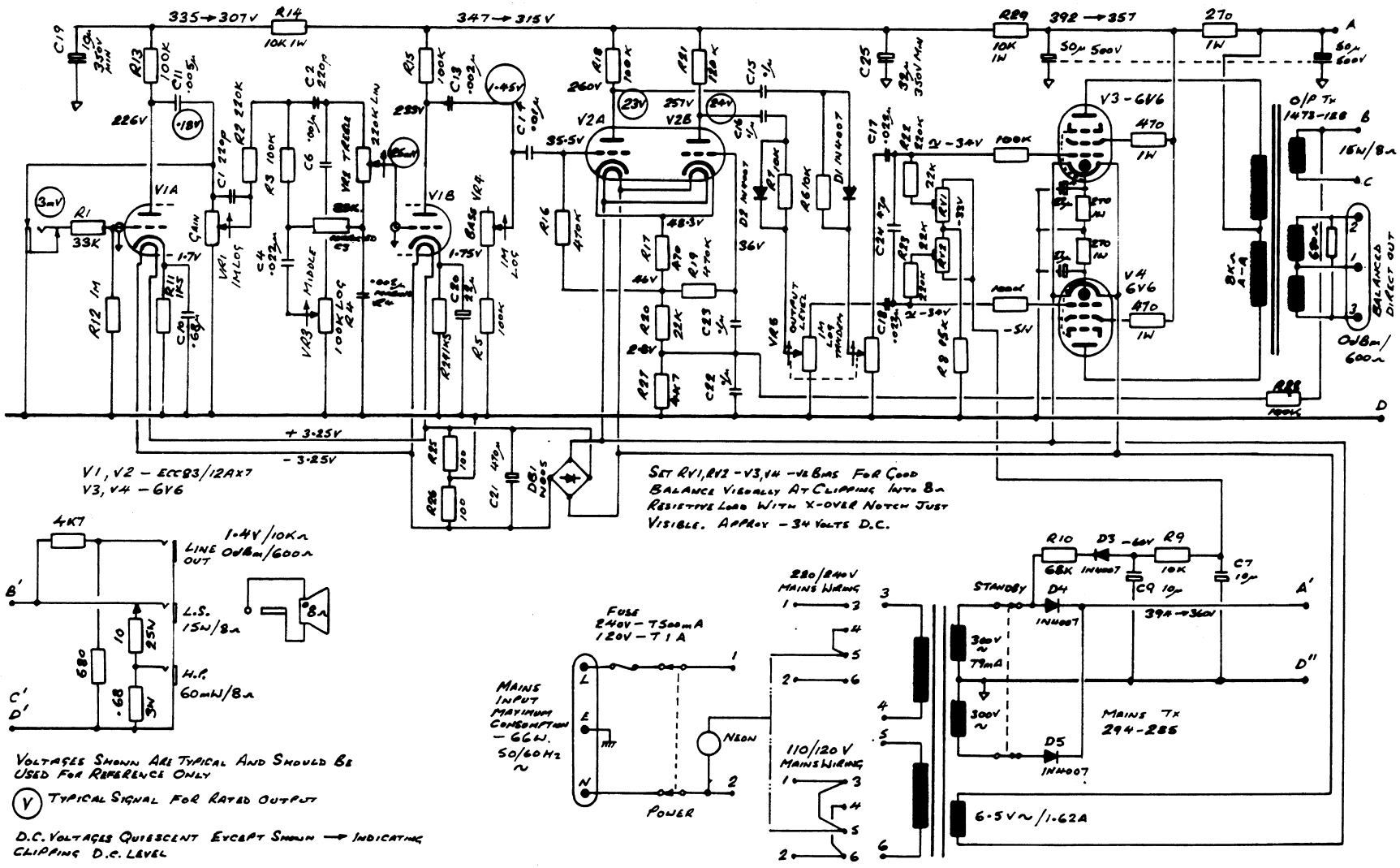

Marshall "STUDIO 15" MODEL 4001

ISS 1 8-5-85 S.G.

SUPER PA **(MODEL 1963)**

Marshall

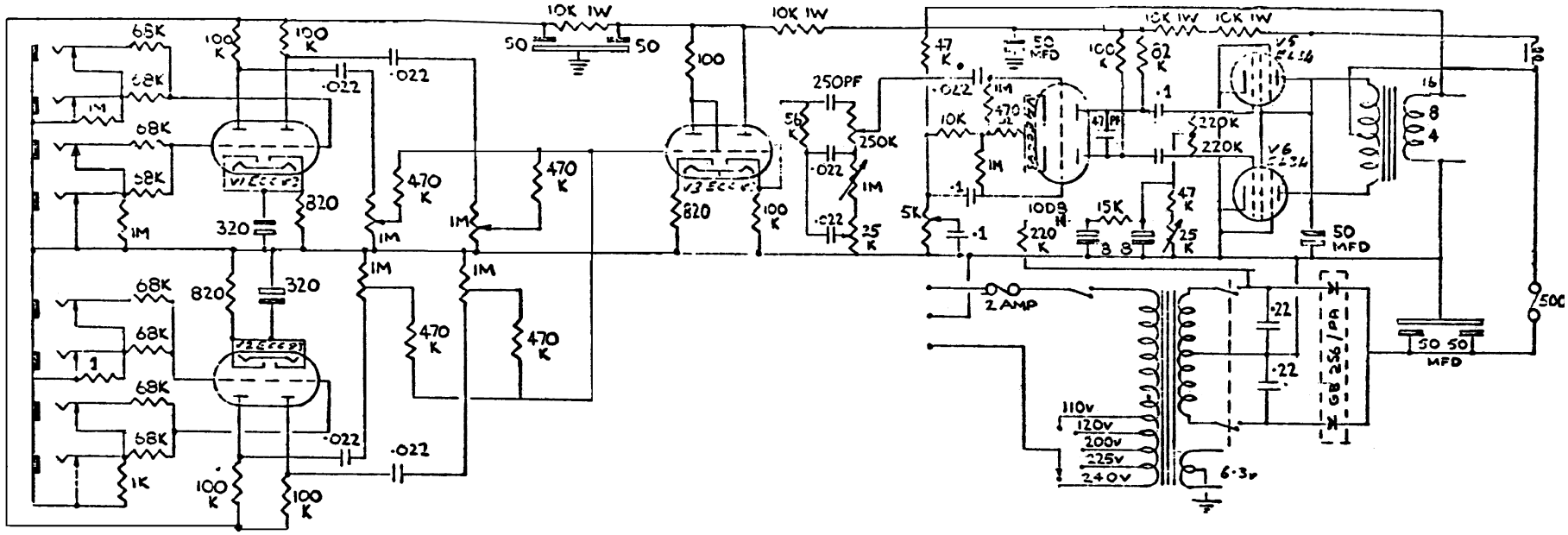

PIN N°	V1	V2	V3	V4	V5	V6	7
1	155v	155v	150v	210v	-	-	
2	-	-	-	+	HEATER	HEATER	
3	1·4v	1·4v	1v	37v	430v	430v	
4	HEATERS	HEATERS	HEATERS	HEATERS	435v	436v	
5	"	"	"	"	-31	-31	
6	155v	155v	270v	200v	N.C	N.C.	
7	-		150v	+	HEATER	HEATER	
8	1·4v	1·4v	150v	37v	-	-	
9	HEATER	HEATERS	HEATERS	HEATERS	N.P	N.P.	

1963 | JULY '70'

SUPER PA

JIM MARSHALL PRODUCTS LTD.

ALL MARSHALL AMPLIFIERS ARE SUBJECT TO CONTINUOUS DEVELOPMENT AND IMPROVMENT CONSIQUENTLY THE UNITS MAY INCORPORATE MINOR CHANGES IN DETAIL FROM THE INFORMATION CONTAINED ABOVE.

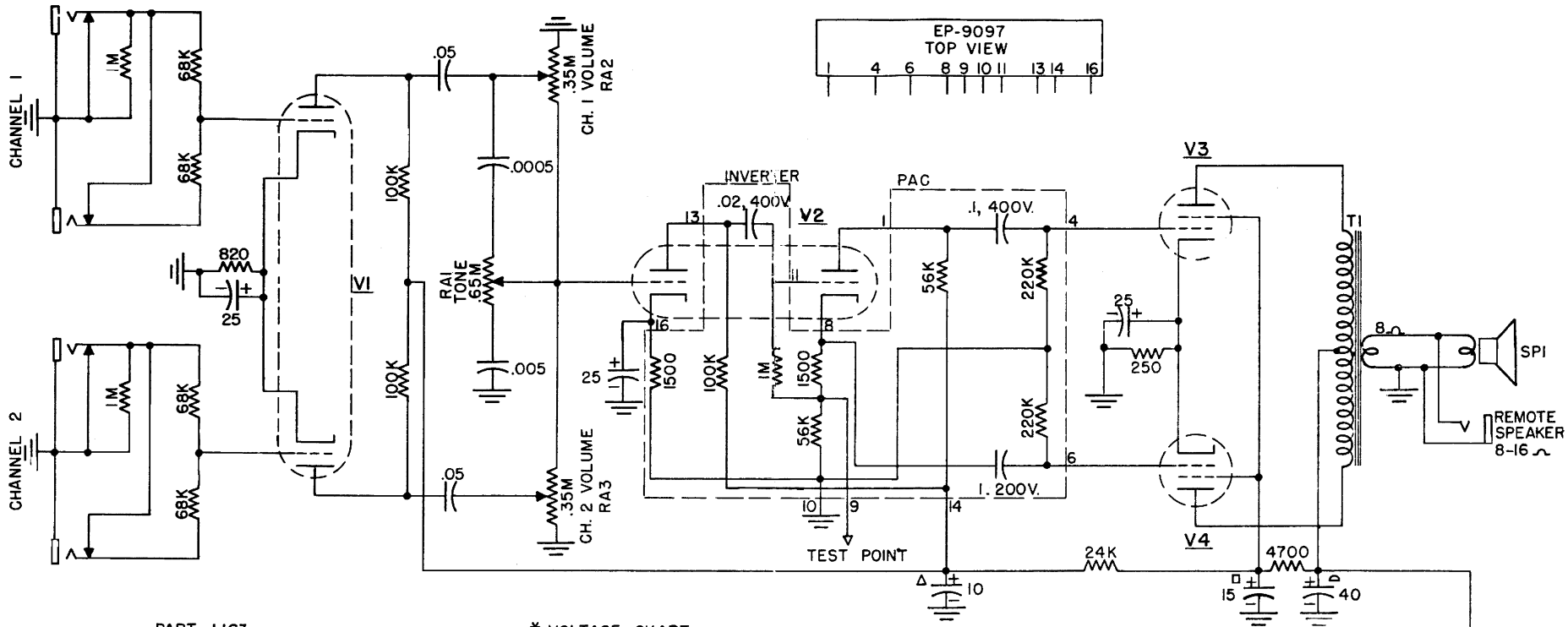

PART LIST

PART	PART NUMBER
INVERTER PAC	EP-9097
TRANSFORMER T1	T-703
TRANSFORMER T2	PT-5201
POWER SWITCH S1	S-1105
SPEAKER SP1	SP-5401
CONTROL RA1	RA-2902
CONTROLS RA2, RA3	RA-2903

* VOLTAGE CHART

PIN NUMBER	V1 12AY7	V2 12AX7	V3 6V6	V4 6V6	V5 5Y3
1	110	140	N.C.	N.C.	N.C.
2	0	0	6.3 A.C.	6.3 A.C.	5 A.C.#
3	1.75	1.15	330	330	N.C.
4	0	0	300	300	300
5	0	0	0	0	N.C.
6	110	175	N.C.	N.C.	500
7	0	0	0	0	N.C.
8	1.75	42	19	19	340
9	6.3 A.C.	6.3 A.C.	—	—	—

* VOLTS, MEASURED TO GROUND WITH VTVM. # MEASURED TO PIN 8

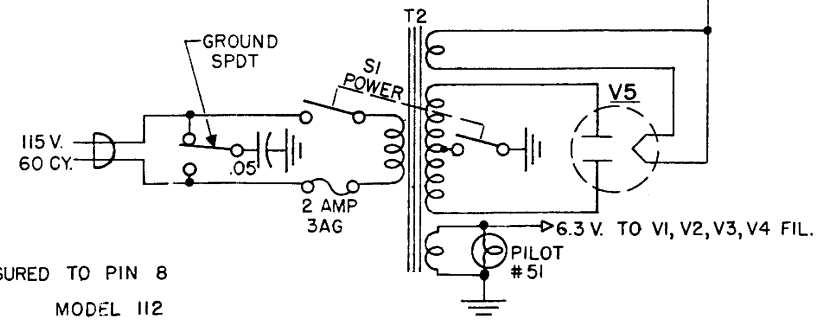

C. F. MARTIN & CO INC. NAZARETH PENN. MODEL 112

MODELS MA-35N, MA-35RCN

MARK SIMPSON MFG. CO., INC.

Tube replacement will usually necessitate a readjustment of the internal hum balancing control. The following procedure is recommended:

1. Turn amplifier ON.
2. Disconnect all input devices such as microphones or phonographs.
3. Rotate all controls to their maximum clockwise positions.
4. Adjust hum control (with screw driver) for minimum hum as heard in speaker.

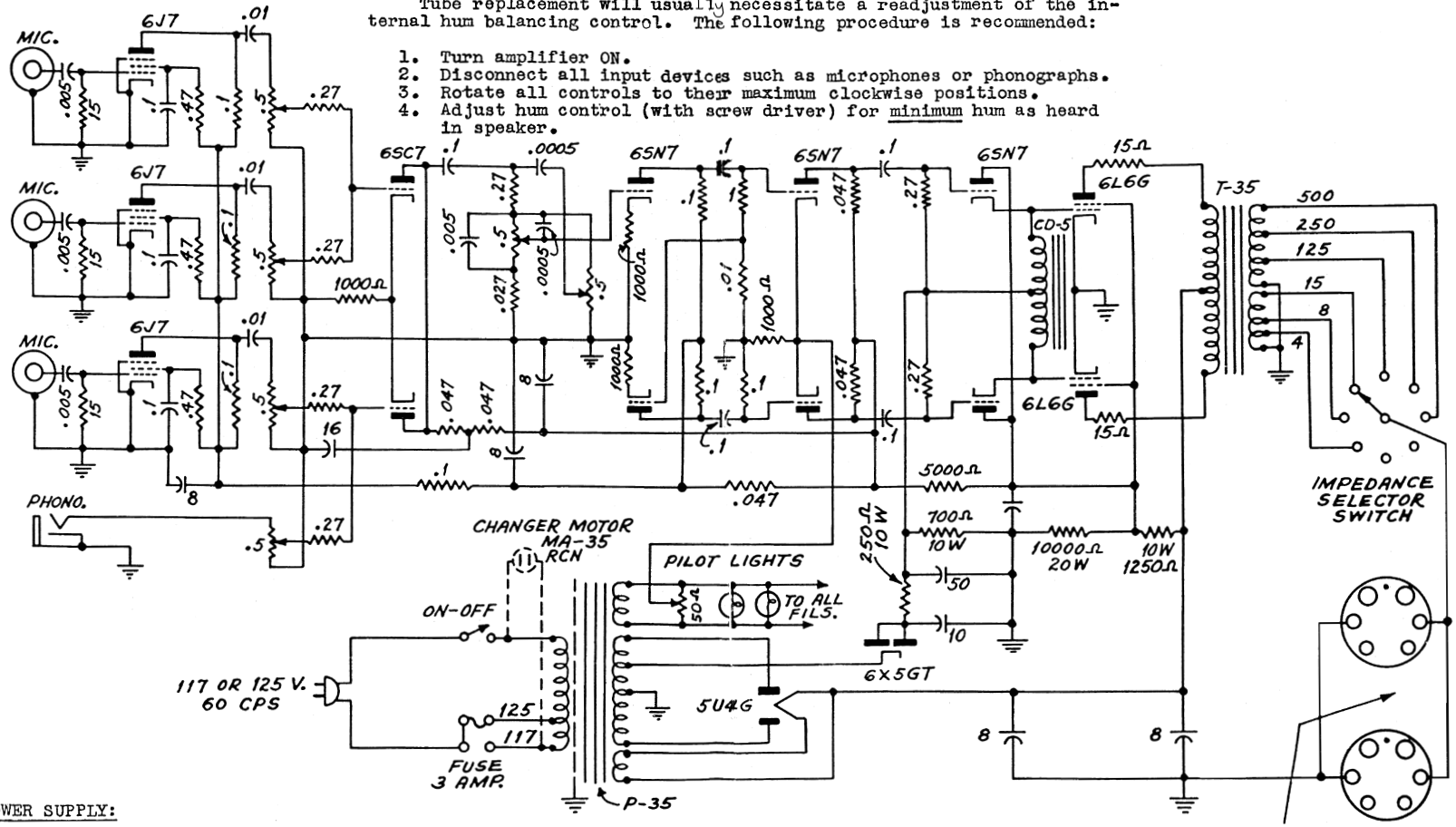

UNLESS OTHERWISE SPECIFIED:
ALL RESISTORS IN MEGOHMS (1/2 WATT).
ALL CAPACITORS IN MICROFARADS.

POWER SUPPLY:

The amplifier is designed to operate from 105 volts to 125 volts 60 cps. alternating current (AC).

The amplifier has internal provision to compensate for abnormal line voltage conditions. When the measured line voltage is 117 volts or less, the fuse box on the rear of the amplifier should be opened and the fuse transferred to the clips marked 117 V. For line voltages over 117 volts no change is necessary and the fuse is left in the 125 V. position. When the exact line voltage cannot be measured, leave the fuse in the 125 V. position.

NOTE: ALWAYS REMOVE THE LINE CORD PLUG FROM THE AC RECEPTACLE BEFORE OPENING THE FUSE BOX. DO NOT REPLACE THE PLUG UNTIL THE FUSE BOX IS CLOSED.

BOOGIE **MARK I**

Mesa/Boogie

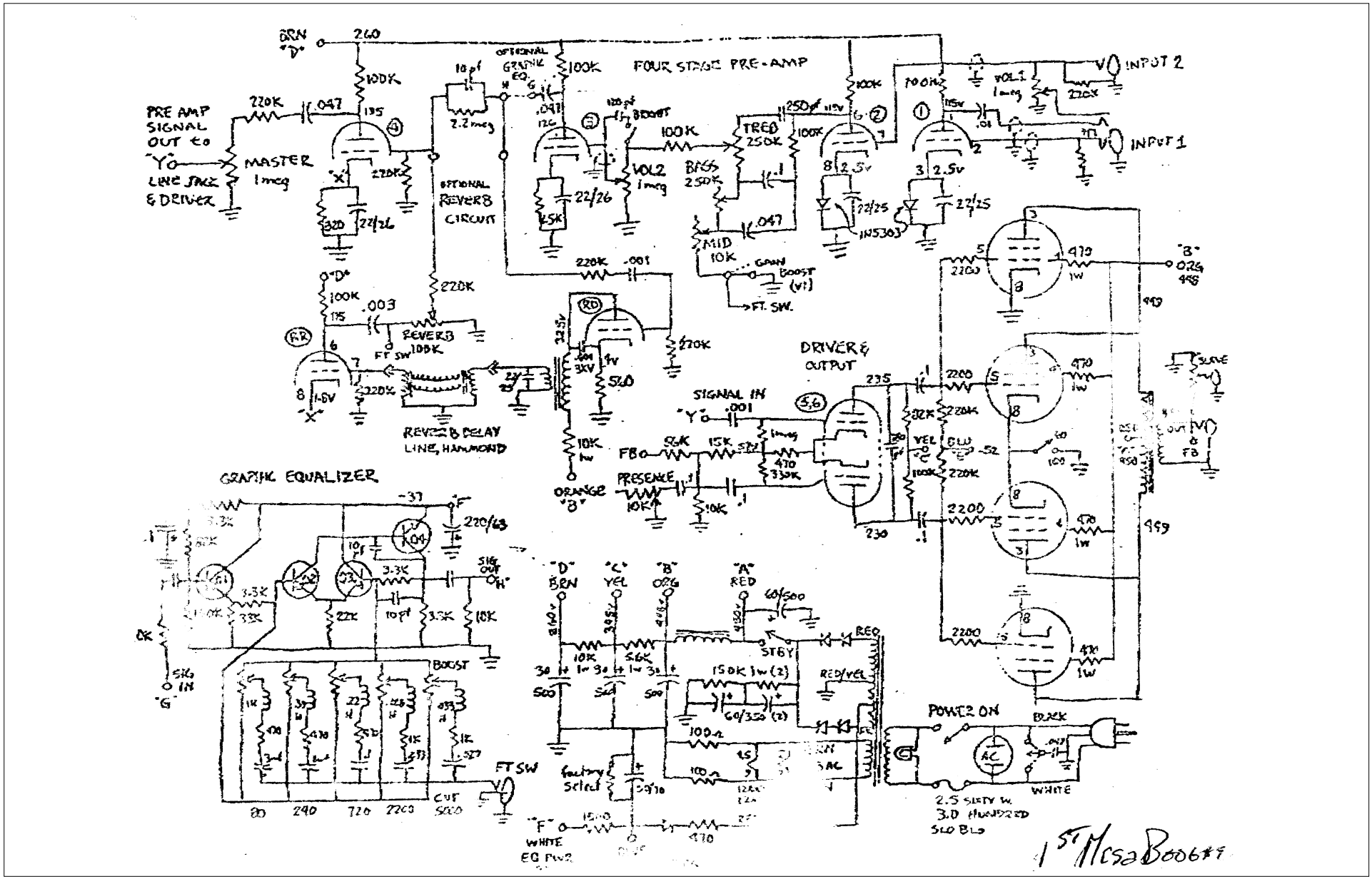

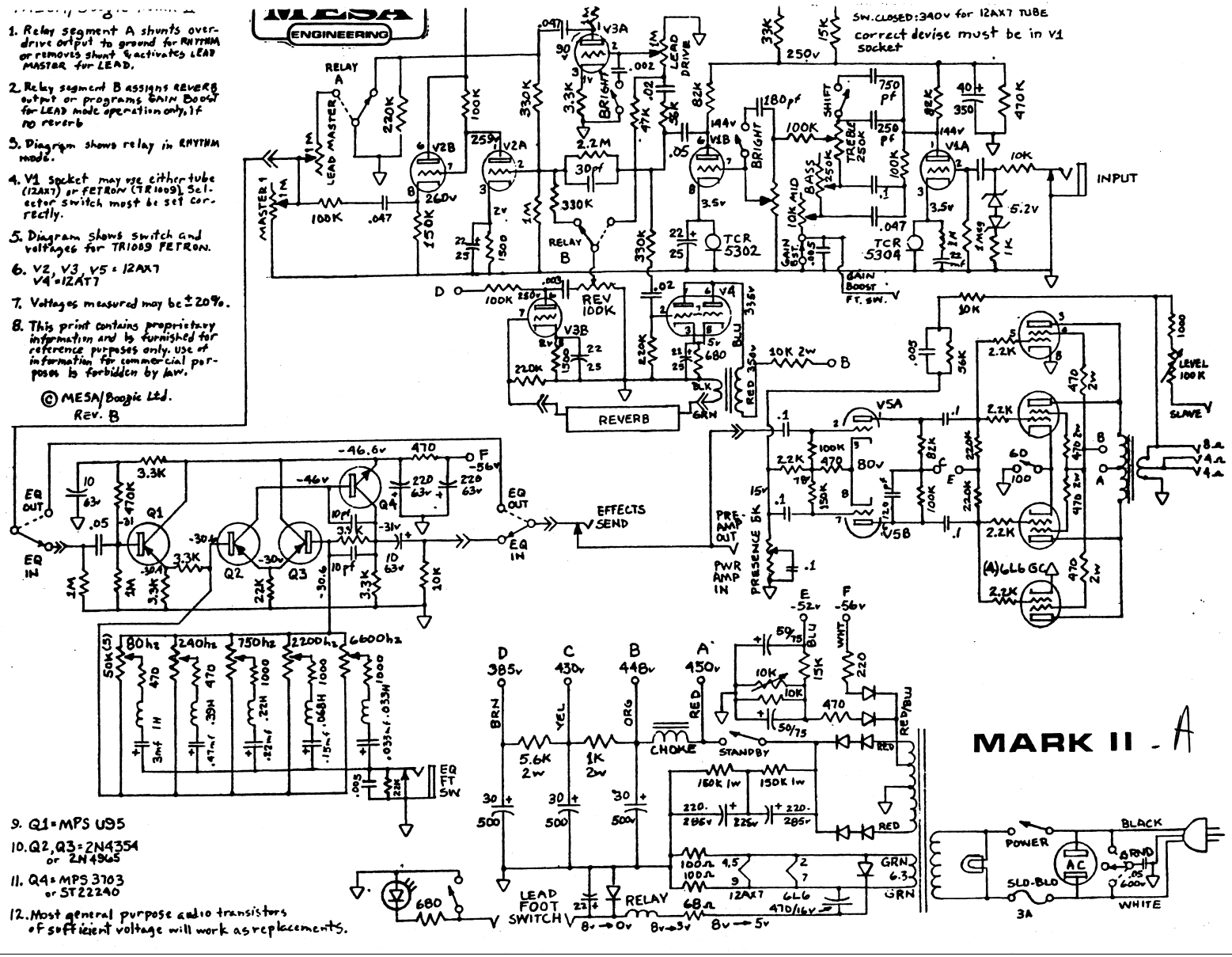
MESA ENGINEERING
1. Relay segment A shunts overdrive output to ground for RHYTHM or removes shunt & activates LEAD MASTER for LEAD.
2. Relay segment B assigns REVERB output or programs GAIN Boost for LEAD mode operation only, if no reverb
3. Diagram shows relay in RHYTHM mode.
4. V1 socket may use either tube (12AX7) or FETRON (TR1009). Selector switch must be set correctly.
5. Diagram shows switch and voltages for TR1009 FETRON.
6. V2, V3, V5 = 12AX7 V4 = 12AT7
7. Voltages measured may be ±20%.
8. This print contains proprietary information and is furnished for reference purposes only. Use of information for commercial purposes is forbidden by law.
© MESA/Boogie Ltd. Rev. B
SW. CLOSED: 340v for 12AX7 TUBE correct devise must be in V1 socket
INPUT
SLAVE
LEVEL 100K
REVERB
EFFECTS SEND
EQ OUT
EQ IN
EQ FT SW
LEAD FOOT SWITCH
RELAY
CHOKE
STANDBY
POWER
SLO-BLO
3A
BLACK
WHITE
MARK II - A
9. Q1 = MPS U95
10. Q2, Q3 = 2N4354 or 2N4965
11. Q4 = MPS 3703 or ST22240
12. Most general purpose audio transistors of sufficient voltage will work as replacements.

MESA/Boogie Mark II-B

1. Relay segment A shunts overdrive output to ground for Rhythm or removes shunt and activates Lead Master for Lead Mode.

2. Relay segment B assigns reverb output to V2A for Rhythm or to mix in Lead Drive stage, V3A for Lead.

3. Diagram shows relay in Rhythm mode position.

4. V1 through V5: all type 12AX7.

5. Q1: MPS U96. Q2,Q3: 2N4354 or 2N1965. Q4: MPS 3703 or 2N3568.

6. Most general purpose audio Q's of adequate voltage will work fine.

7. This print contains proprietary information and is furnished for reference only. Any use for commercial purposes is strictly forbidden by law.

8. This design Registered in US Patent Office, Number 4,211,893.

© MESA/Boogie Ltd 1978

3/24/81

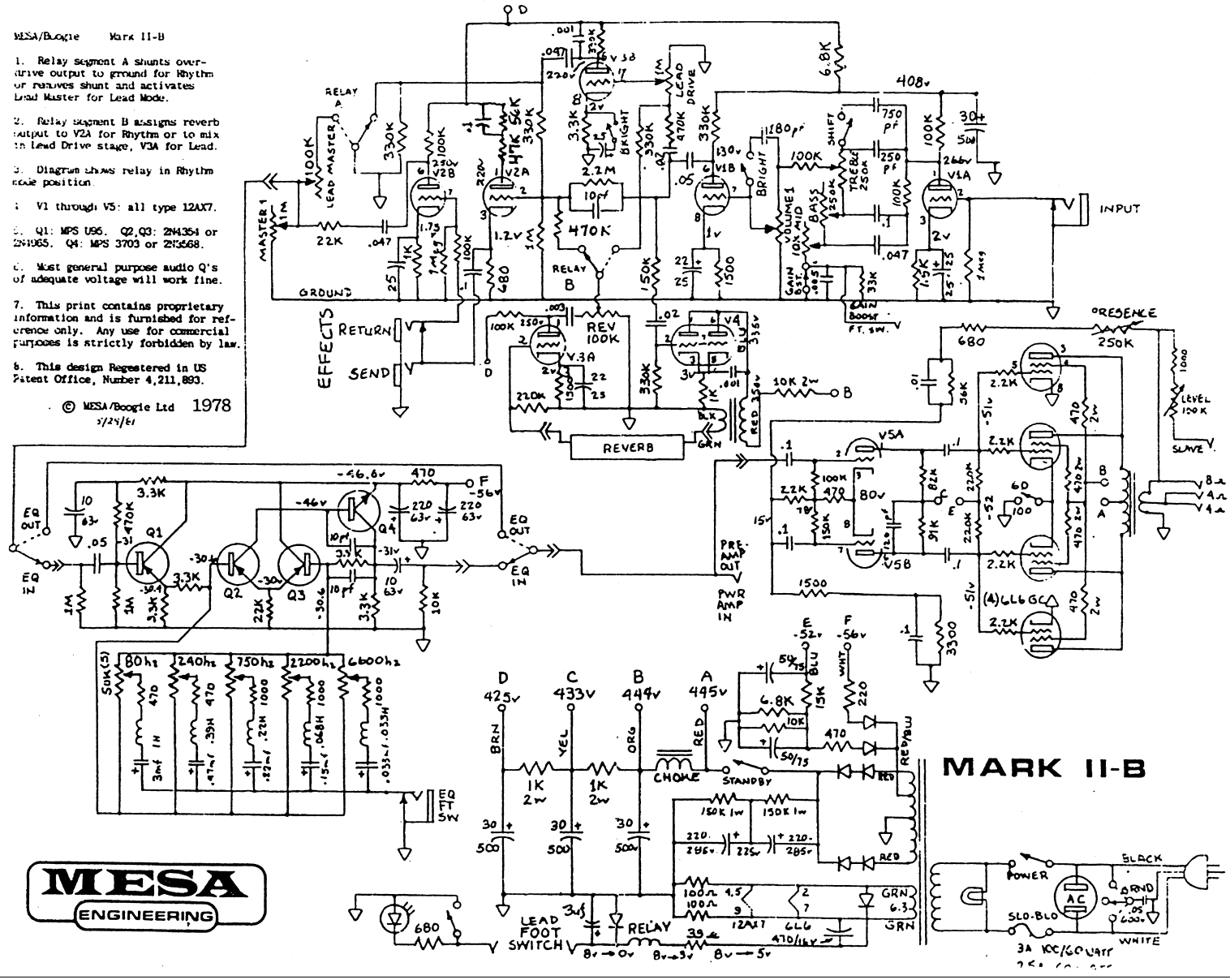

MESA/BOOGIE MARK IIC+ Guitar Preamplifier

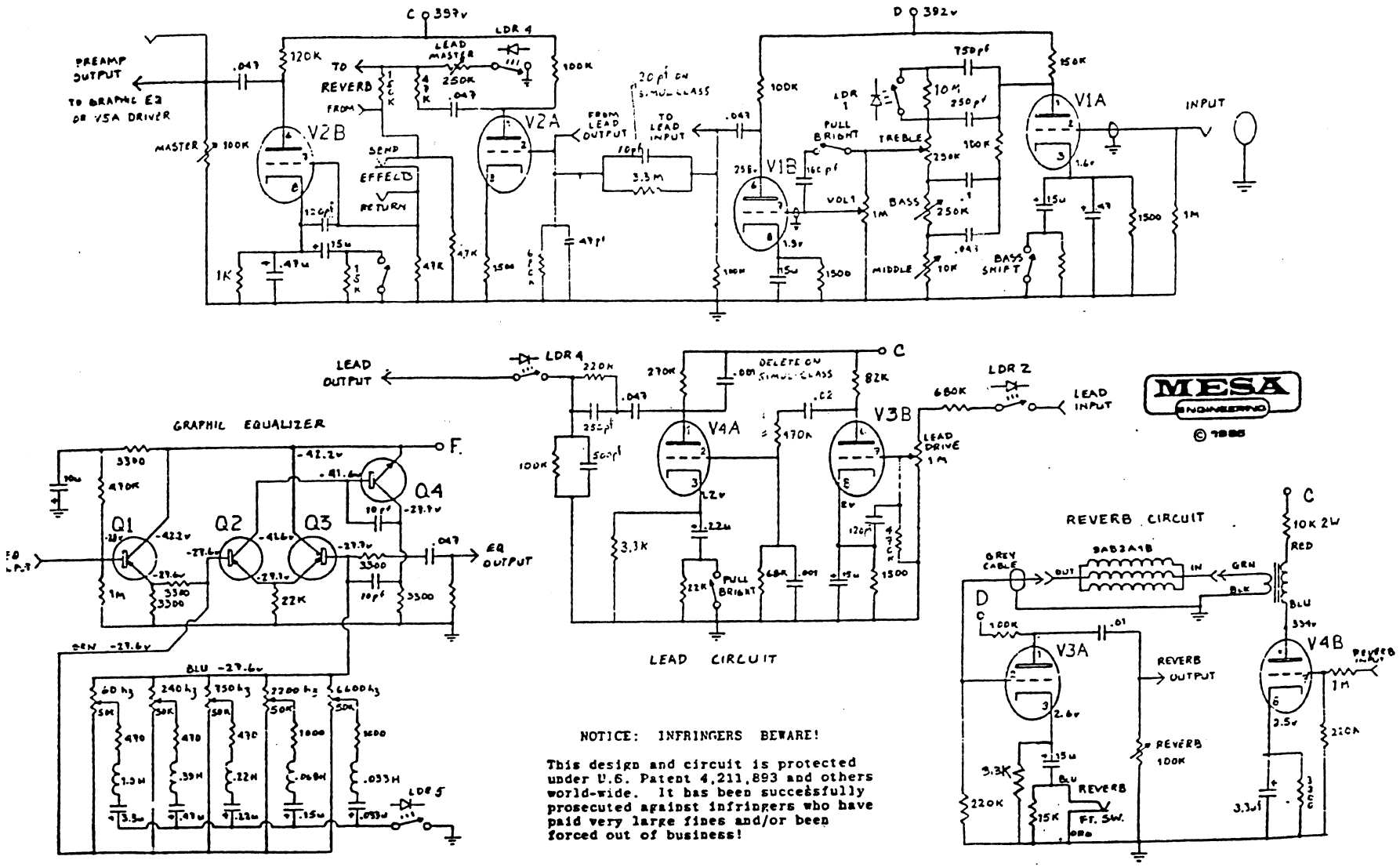

NOTICE: INFRINGERS BEWARE!

This design and circuit is protected under U.S. Patent 4,211,893 and others world-wide. It has been successfully prosecuted against infringers who have paid very large fines and/or been forced out of business!

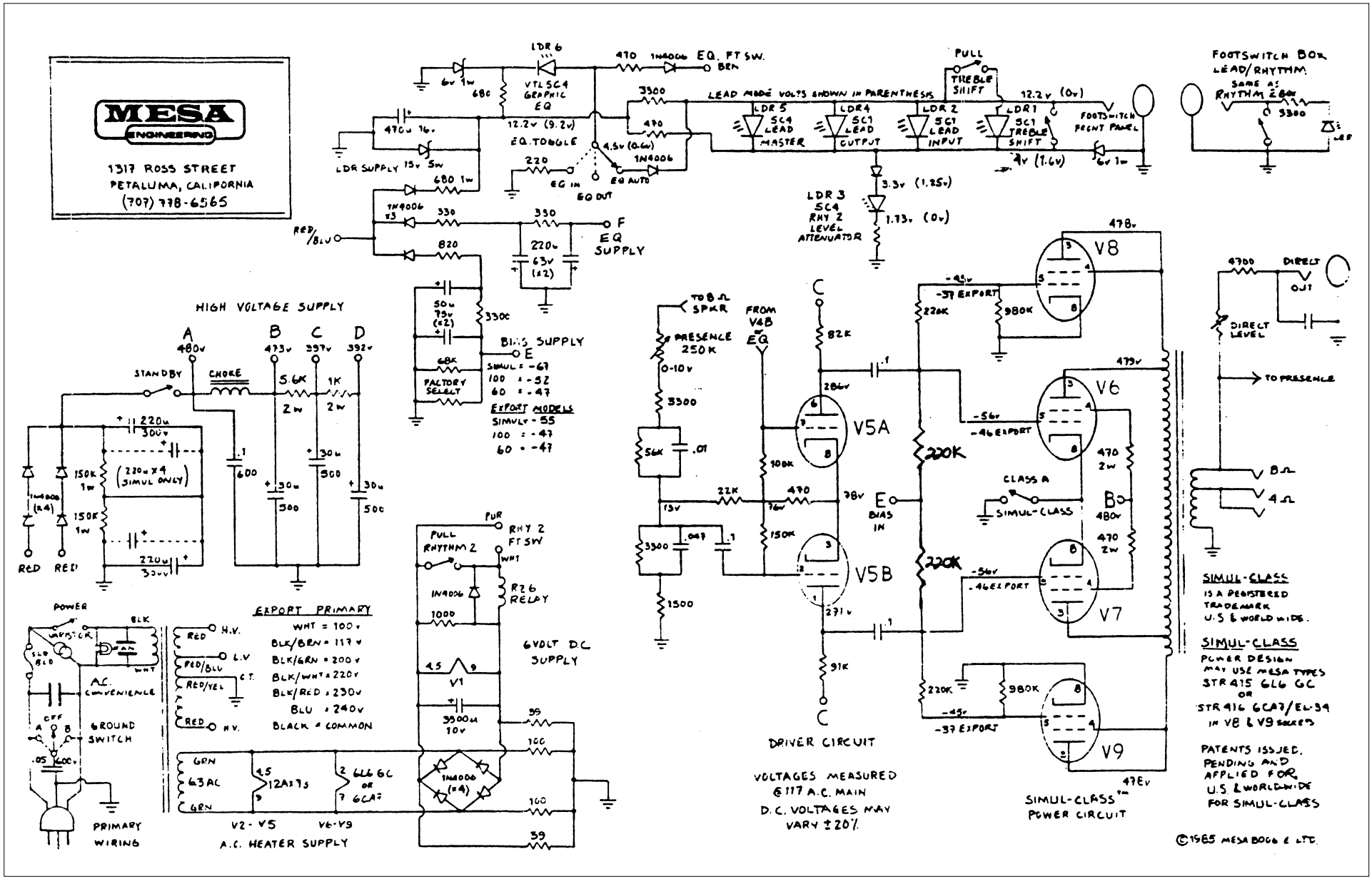
MESA ENGINEERING
1317 ROSS STREET
PETALUMA, CALIFORNIA
(707) 778-6565
HIGH VOLTAGE SUPPLY
STANDBY
CHOKE
BIAS SUPPLY
FACTORY SELECT
EXPORT MODELS
EXPORT PRIMARY
WHT = 100 v
BLK/BRN = 117 v
BLK/GRN = 200 v
BLK/WHT = 220 v
BLK/RED = 230 v
BLU = 240 v
BLACK = COMMON
POWER
A.C. CONVENIENCE
GROUND SWITCH
PRIMARY WIRING
A.C. HEATER SUPPLY
6VOLT D.C. SUPPLY
RY 2 FT SW
PULL RHYTHM 2
R26 RELAY
EQ. FT SW.
EQ. TOGGLE
EQ IN
EQ OUT
EQ AUTO
EQ SUPPLY
LDR SUPPLY
LEAD MODE VOLTS SHOWN IN PARENTHESIS
PULL TREBLE SHIFT
FOOTSWITCH FRONT PANEL
FOOTSWITCH BOX LEAD/RHYTHM
SAME AS RHYTHM 2
LDR 3 SC4 RHY 2 LEVEL ATTENUATOR
DRIVER CIRCUIT
VOLTAGES MEASURED @ 117 A.C. MAIN
D.C. VOLTAGES MAY VARY ±20%
SIMUL-CLASS POWER CIRCUIT
DIRECT OUT
DIRECT LEVEL
TO PRESENCE
SIMUL-CLASS
IS A REGISTERED TRADEMARK U.S. & WORLD WIDE.
SIMUL-CLASS
POWER DESIGN MAY USE MESA TYPES STR 415 6L6 GC OR STR 416 6CA7/EL-34 IN V8 & V9 SOCKETS
PATENTS ISSUED, PENDING AND APPLIED FOR, U.S. & WORLDWIDE FOR SIMUL-CLASS
©1985 MESA BOOGIE LTD.

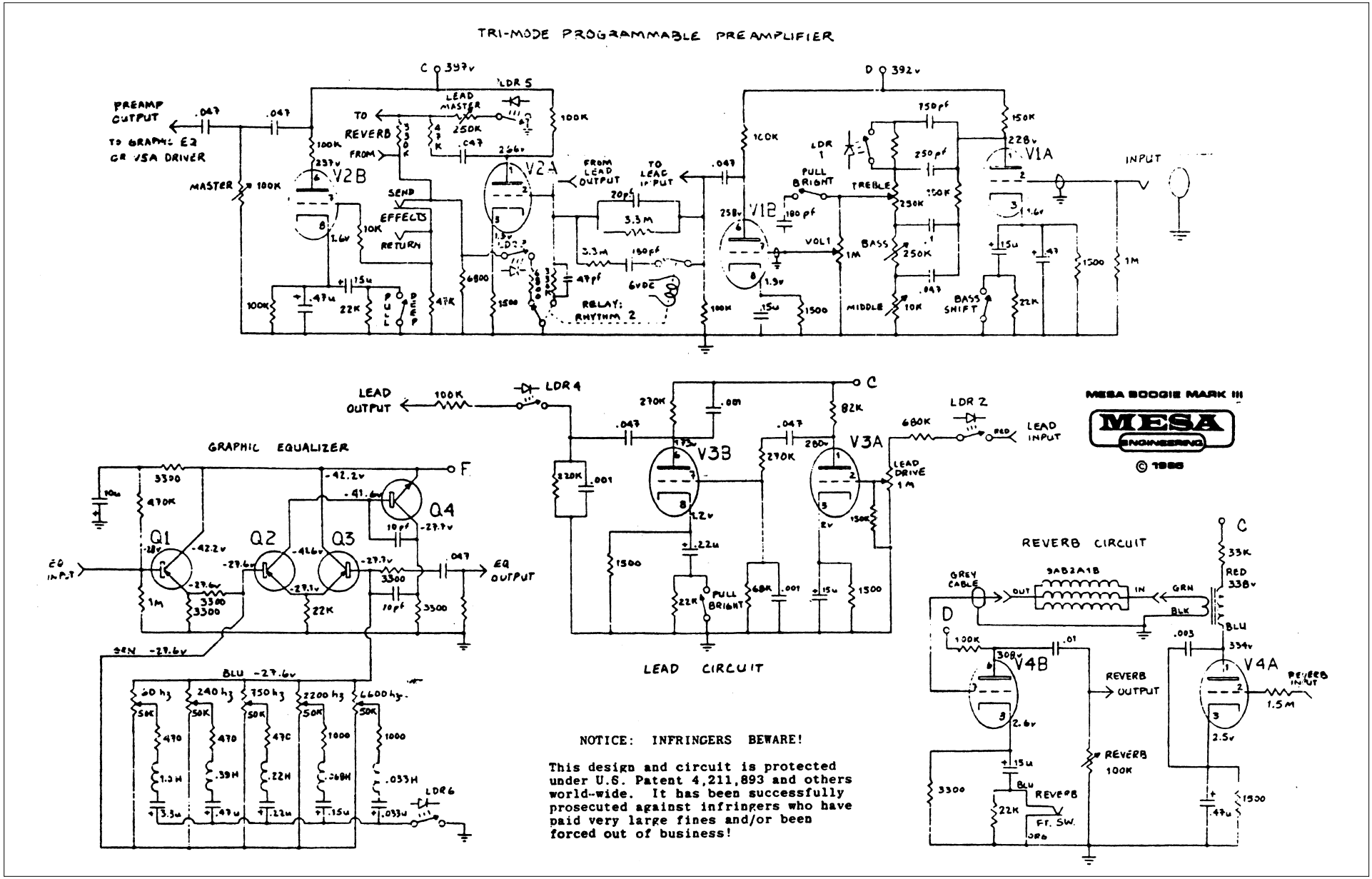

NOTICE: INFRINGERS BEWARE!

This design and circuit is protected under U.S. Patent 4,211,893 and others world-wide. It has been successfully prosecuted against infringers who have paid very large fines and/or been forced out of business!

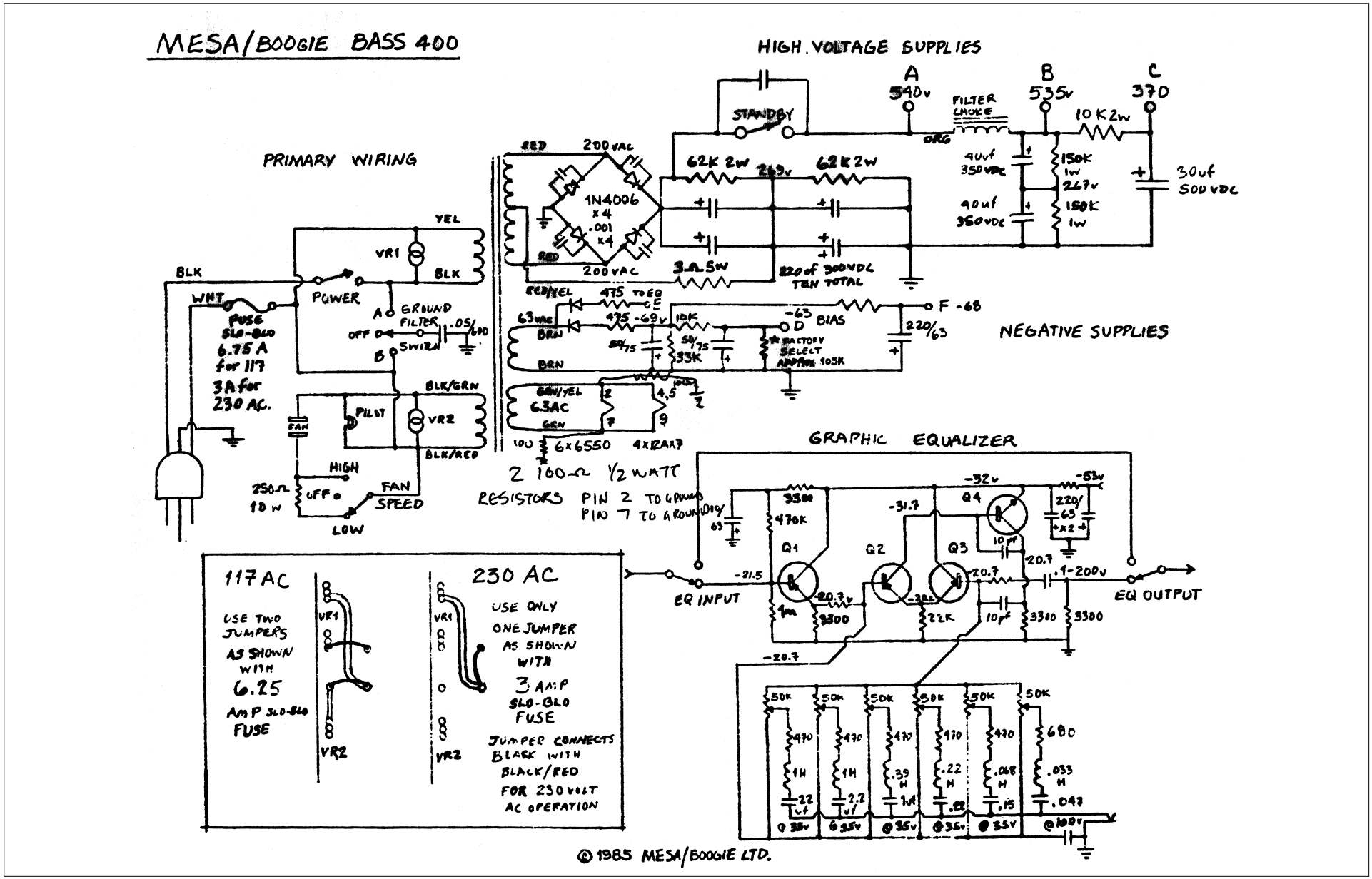
MESA/BOOGIE BASS 400
PRIMARY WIRING
HIGH VOLTAGE SUPPLIES
NEGATIVE SUPPLIES
GRAPHIC EQUALIZER
STANDBY
FILTER CHOKE
1N4006 x4
.001 x4
62K 2W
10K 2W
150K 1W
30uf 500VDC
40uf 350VDC
3.A.5W
220uf 300VDC TEN TOTAL
POWER
GROUND FILTER
SWITCH
PILOT
FAN SPEED
HIGH
LOW
OFF
FUSE SLO-BLO 6.75 A for 117 3A for 230 AC.
6.3AC
6x6550
4x12AX7
2 100Ω 1/2 WATT RESISTORS
PIN 2 TO GROUND
PIN 7 TO GROUND
BIAS
FACTORY SELECT APPROX 105K
EQ INPUT
EQ OUTPUT
117 AC
USE TWO JUMPERS AS SHOWN WITH 6.25 AMP SLO-BLO FUSE
230 AC
USE ONLY ONE JUMPER AS SHOWN WITH 3 AMP SLO-BLO FUSE
JUMPER CONNECTS BLACK WITH BLACK/RED FOR 230 VOLT AC OPERATION
© 1985 MESA/BOOGIE LTD.

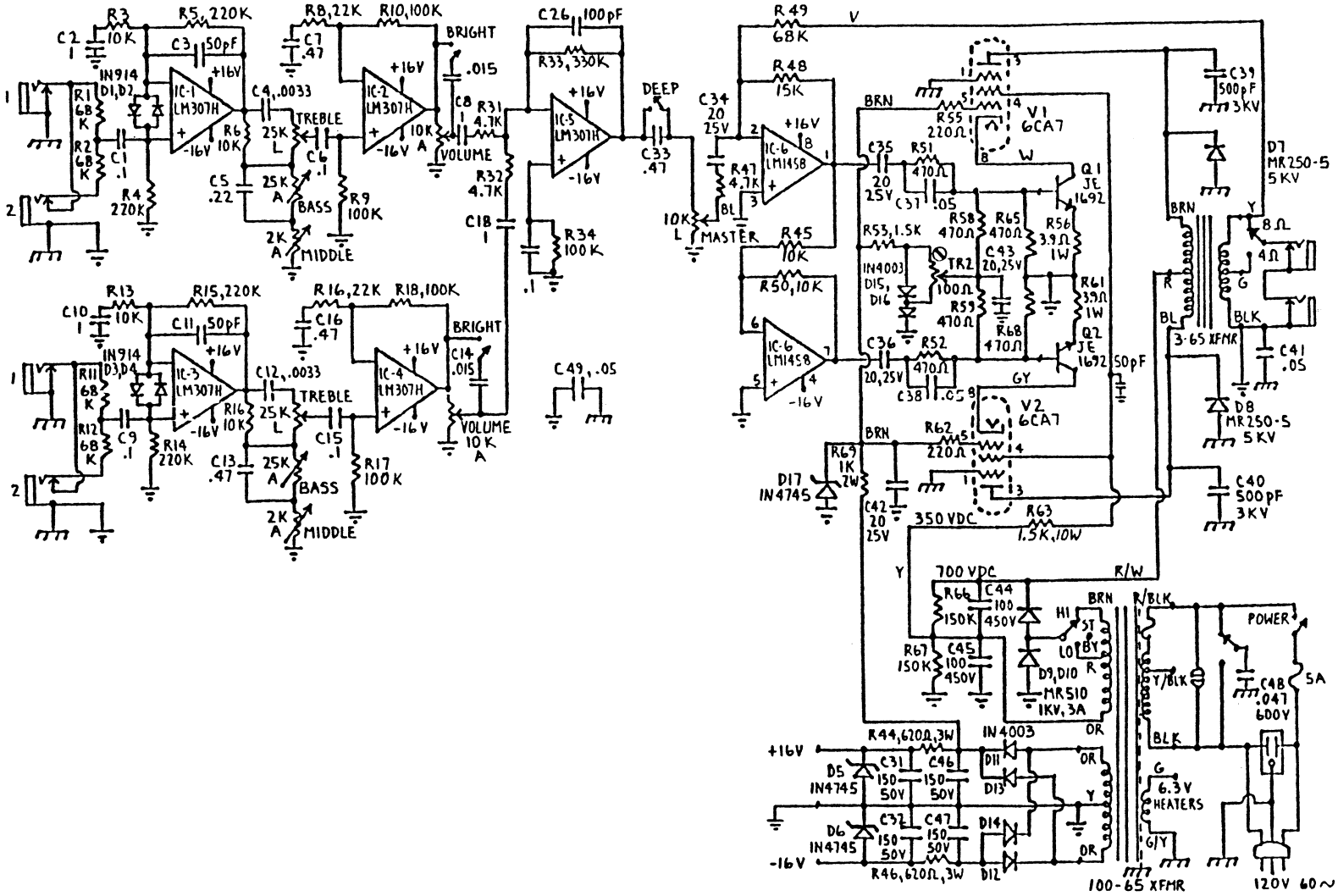

CHASSIS № 2100-65

MUSIC MAN INC.
ANAHEIM, CA.

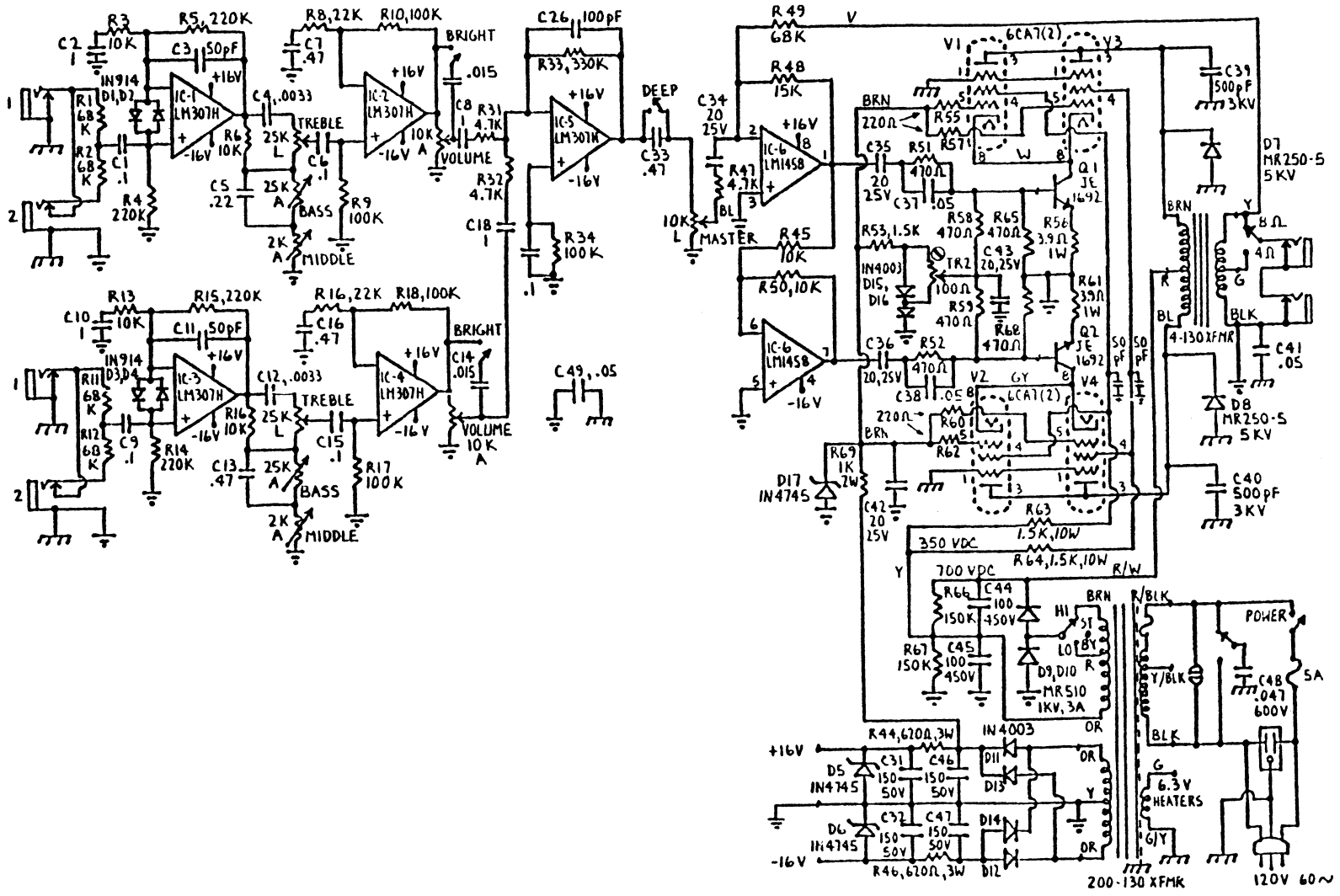

CHASSIS № 2100-130

MUSIC MAN INC.
ANAHEIM, CA.

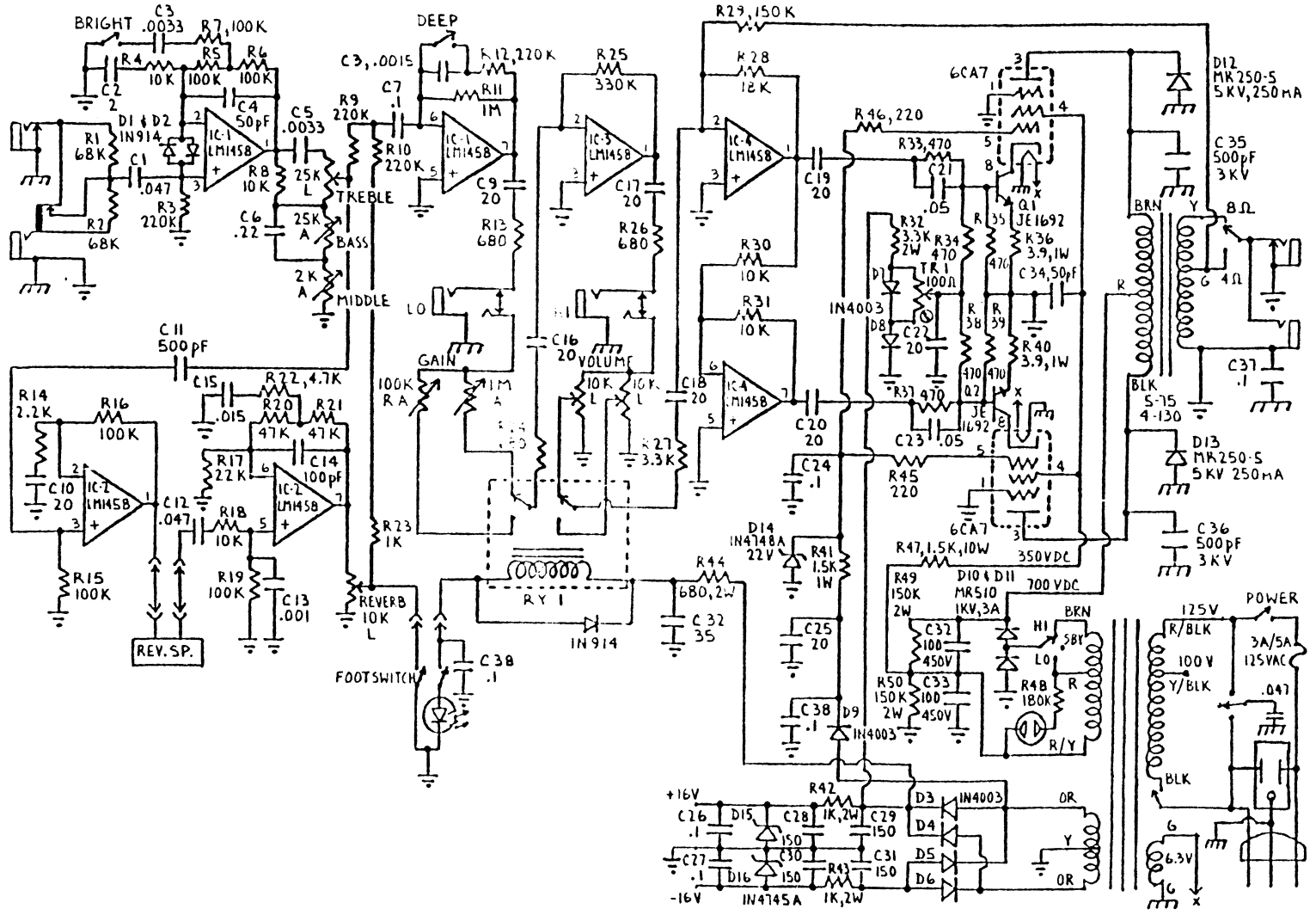

CHASSIS № 2165-RD & 2100-RD

MUSIC MAN INC.
ANAHEIM, CA.

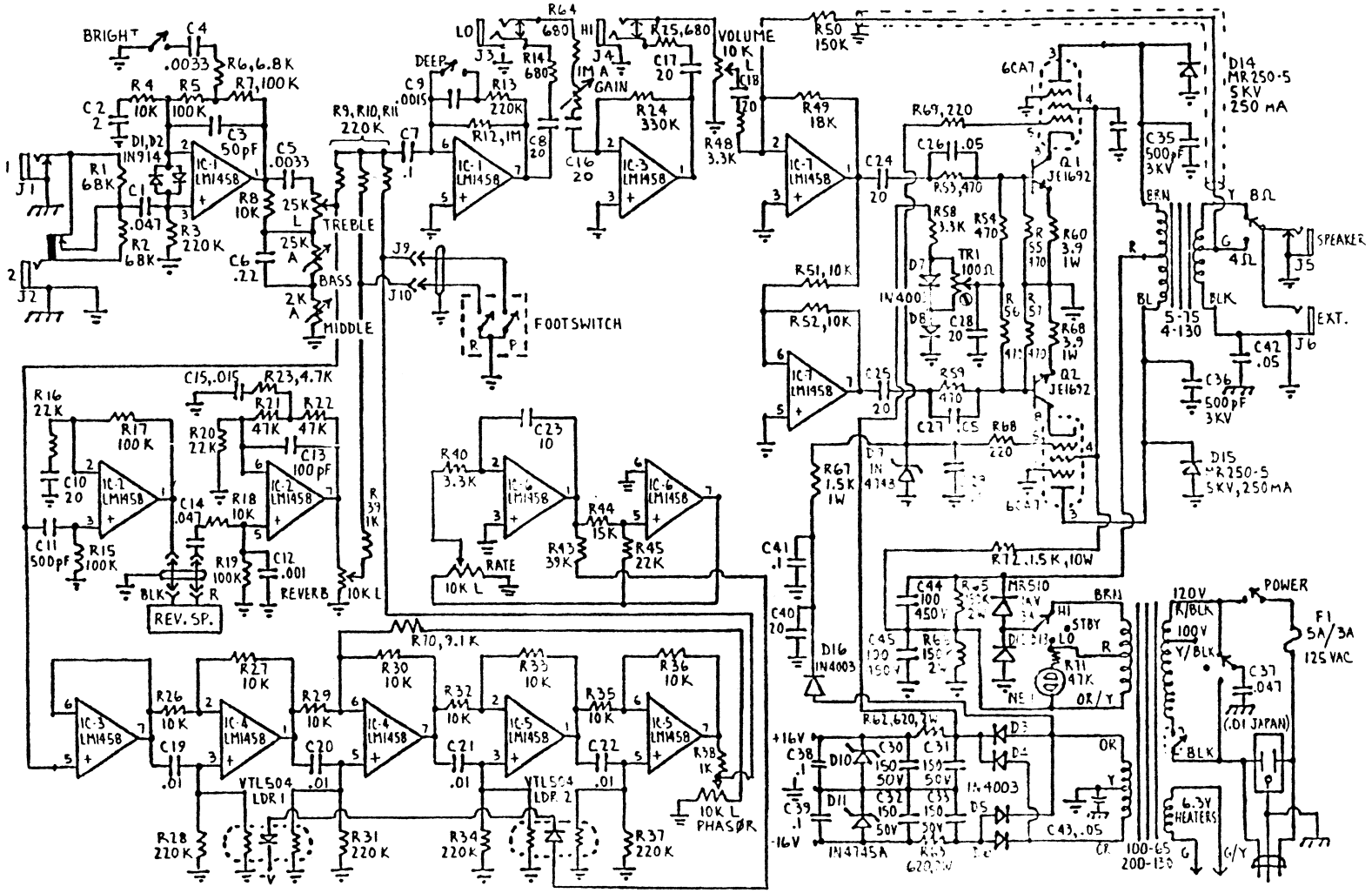

CHASSIS № 2165-RP & 2100-RP
(P.C. BOARD GP-2)

MUSIC MAN INC.
ANAHEIM, CA.

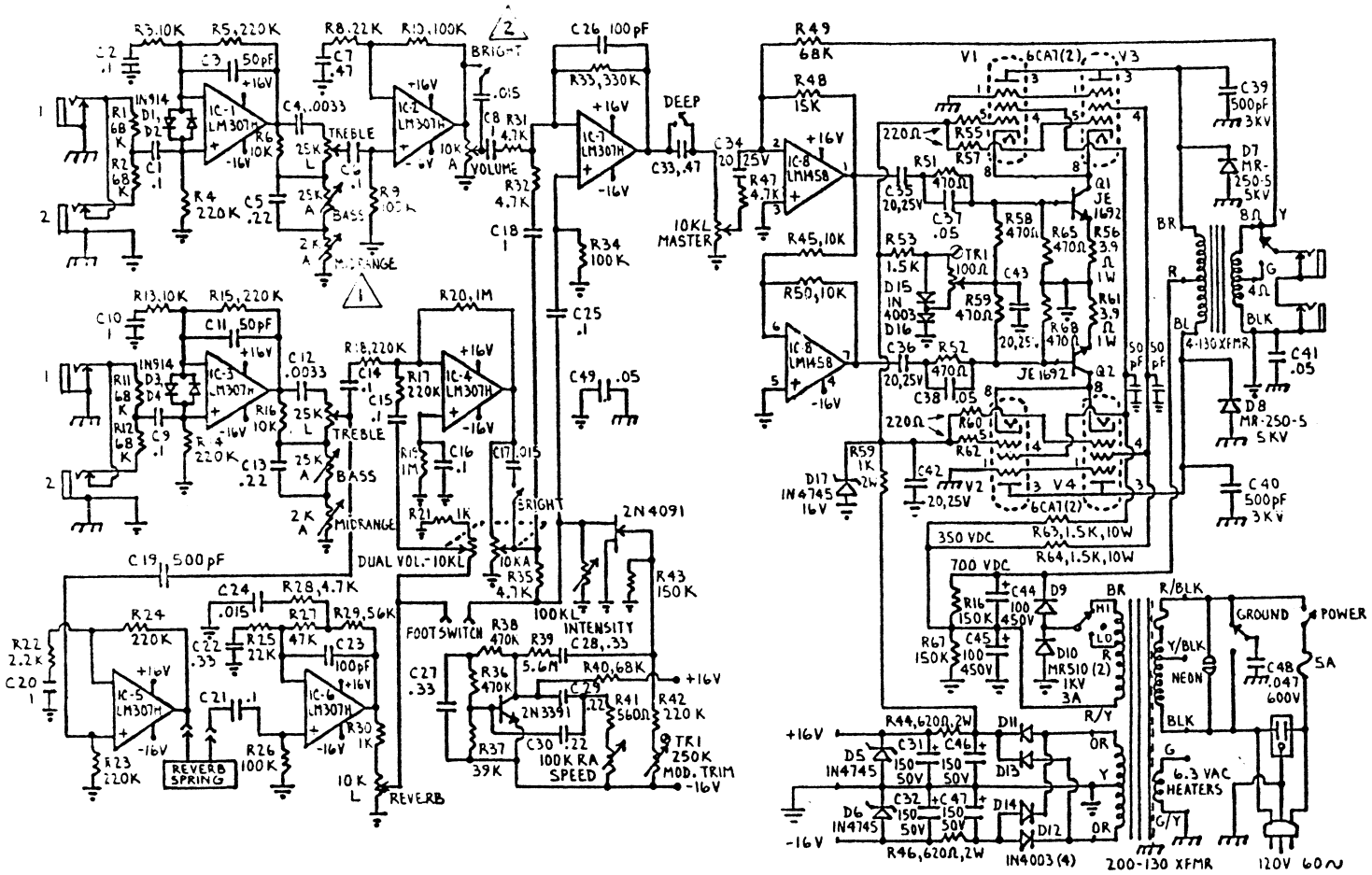

2 ON 2275 CHASSIS, BRIGHT SWITCH & .015 µF CAP. ARE ELIMINATED.

NOTE: 1 ON 2275 CHASSIS, MIDRANGE IS REPLACED BY 820Ω RESISTOR.

CHASSIS Nº 2475-130 & 2275-130

MUSIC MAN INC.
ANAHEIM, CA.

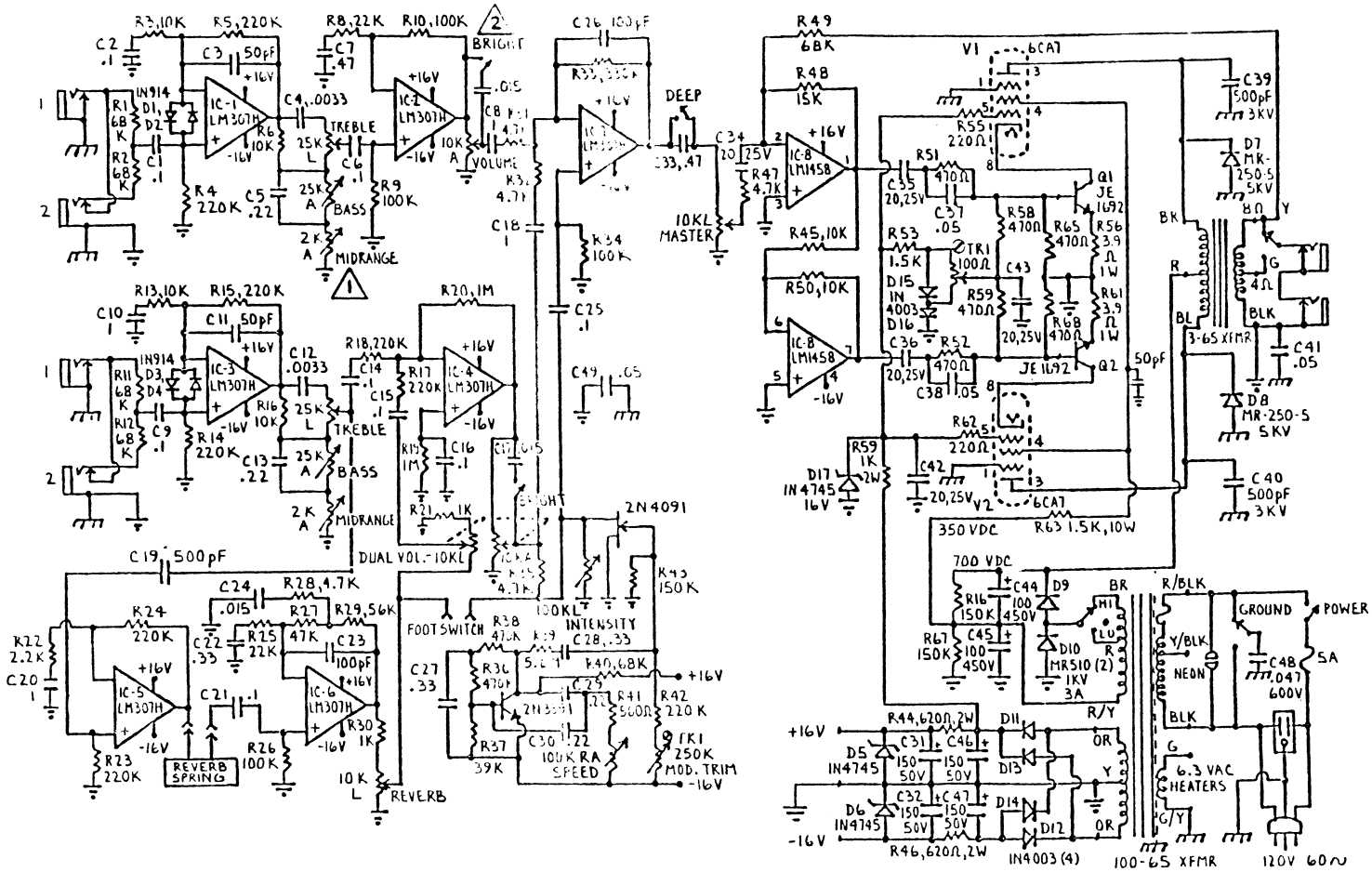

2 ON 2275 CHASSIS, BRIGHT SWITCH & .015 µF CAP. ARE ELIMINATED.

NOTE: 1 ON 2275 CHASSIS, MIDRANGE IS REPLACED BY 820Ω RESISTOR.

CHASSIS № 2475-65 & 2275-65

MUSIC MAN INC.
ANAHEIM, CA.

BB-3 **(75w)**

Music Man

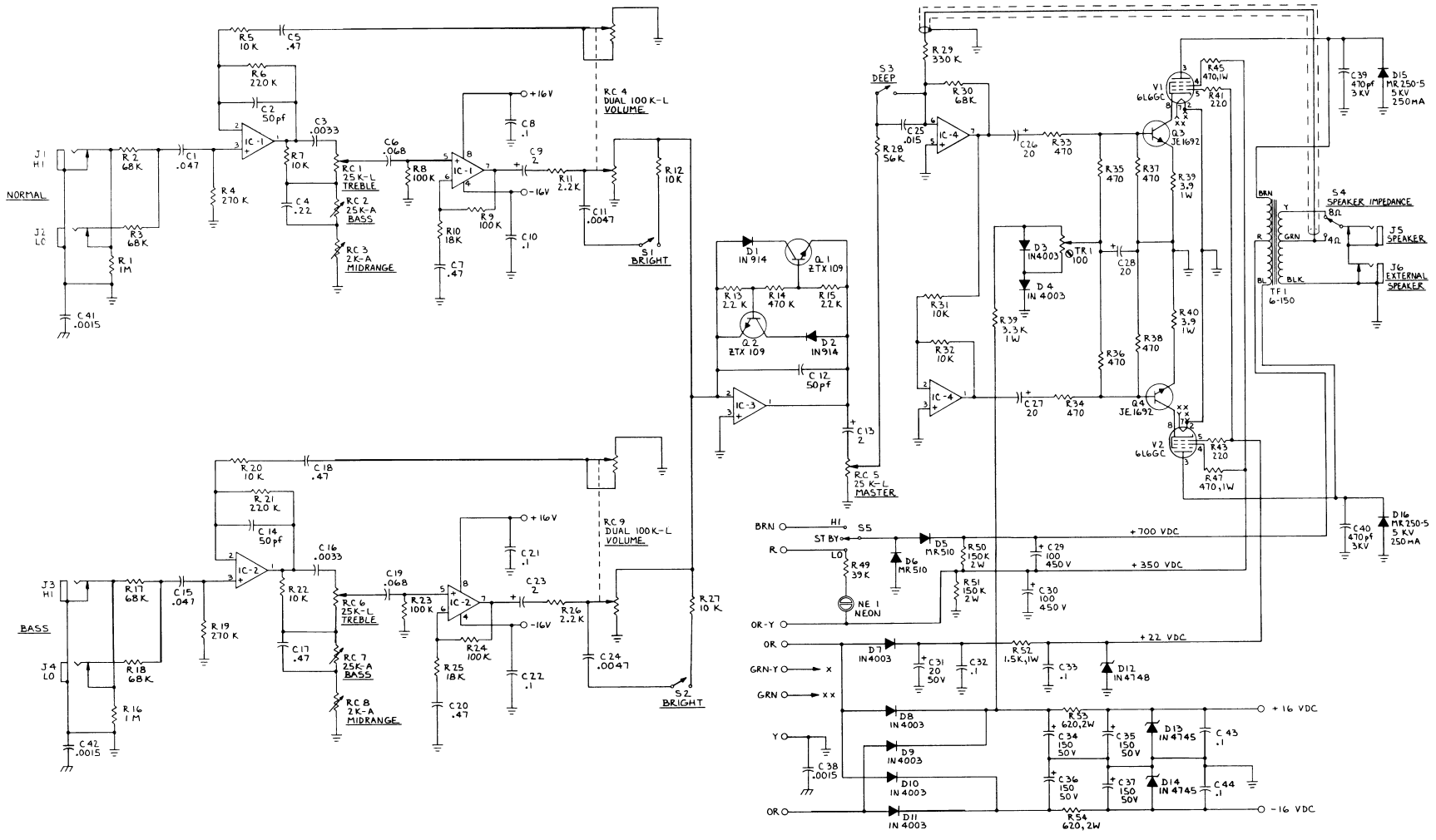

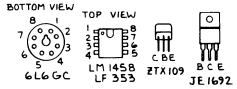

3. IC'S 1, 2, & 3 ARE LF 353 OR TL072; IC 4 IS LM 1458.

2. ALL CAPACITANCE VALUES ARE IN MICROFARADS (μF) EXCEPT WHERE NOTED.

NOTE: 1. ALL RESISTANCE VALUES ARE IN OHMS (Ω), 1/4 WATT, EXCEPT WHERE NOTED.

DRAWN J. McCarty 7-3-80	MUSIC MAN INC. ANAHEIM, CA.	
CHECKED	SCHEMATIC DIAGRAM - BB-3 AMPLIFIER, 75 W	
DESIGNED		
APPROVED	SCALE	DWG. NO 7002 REV.
APPROVED		SHEET 1 OF 1

BB-3 **(150w)**

Music Man

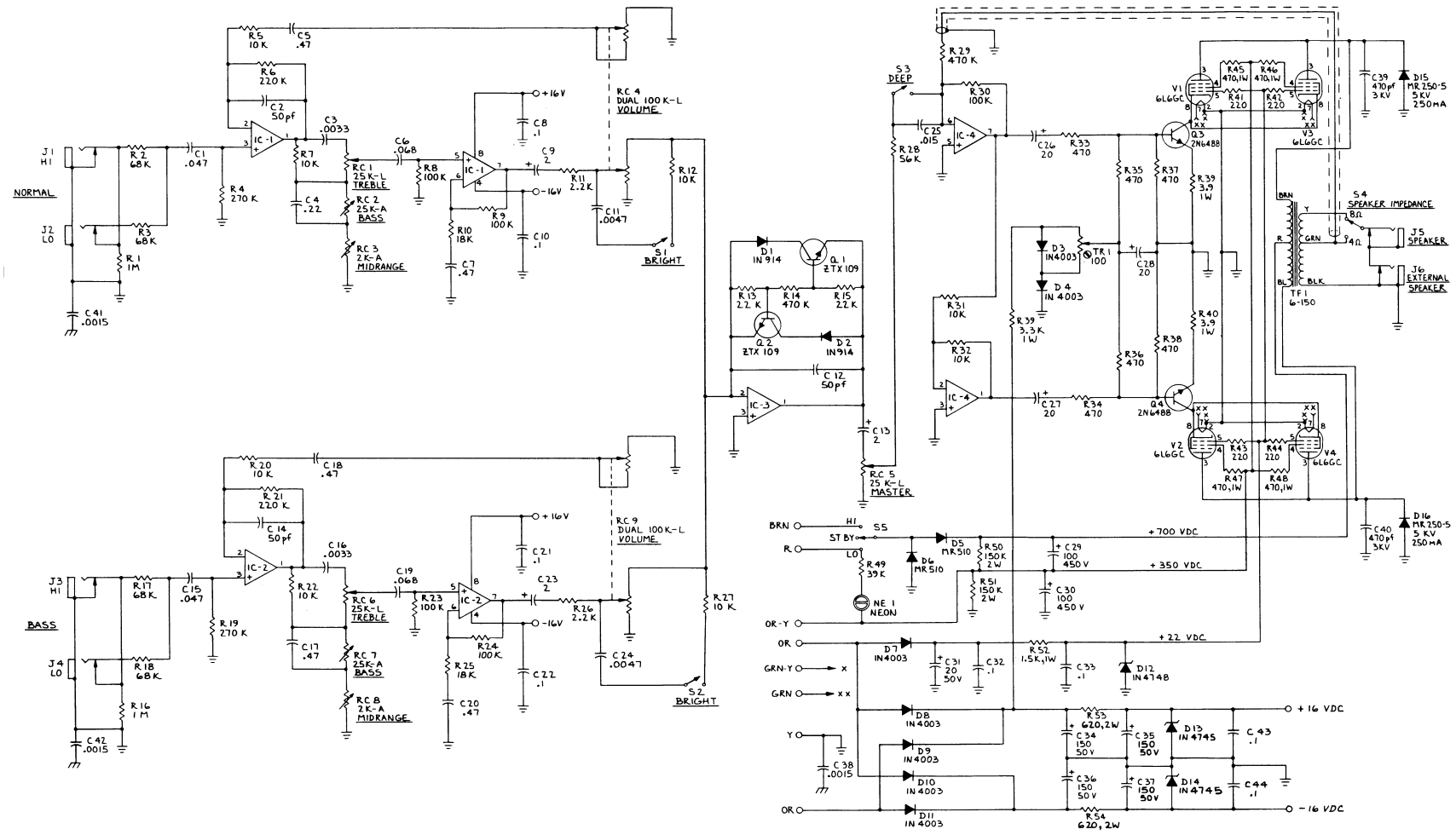

3. IC'S 1,2, & 3 ARE LF 353 OR TL072; IC 4 IS LM 1458.

2. ALL CAPACITANCE VALUES ARE IN MICROFARADS (μF) EXCEPT WHERE NOTED.

NOTE: 1. ALL RESISTANCE VALUES ARE IN OHMS (Ω), ¼ WATT, EXCEPT WHERE NOTED.

DRAWN	MUSIC MAN INC.	ANAHEIM, CA.
CHECKED	SCHEMATIC DIAGRAM - BB-3 AMPLIFIER, 150W	
DESIGNED		
APPROVED	SCALE	DWG. NO. 7001 REV.
APPROVED		SHEET 1 OF 1

GB-2 (2275 & 2475 CHASSIS)

Music Man

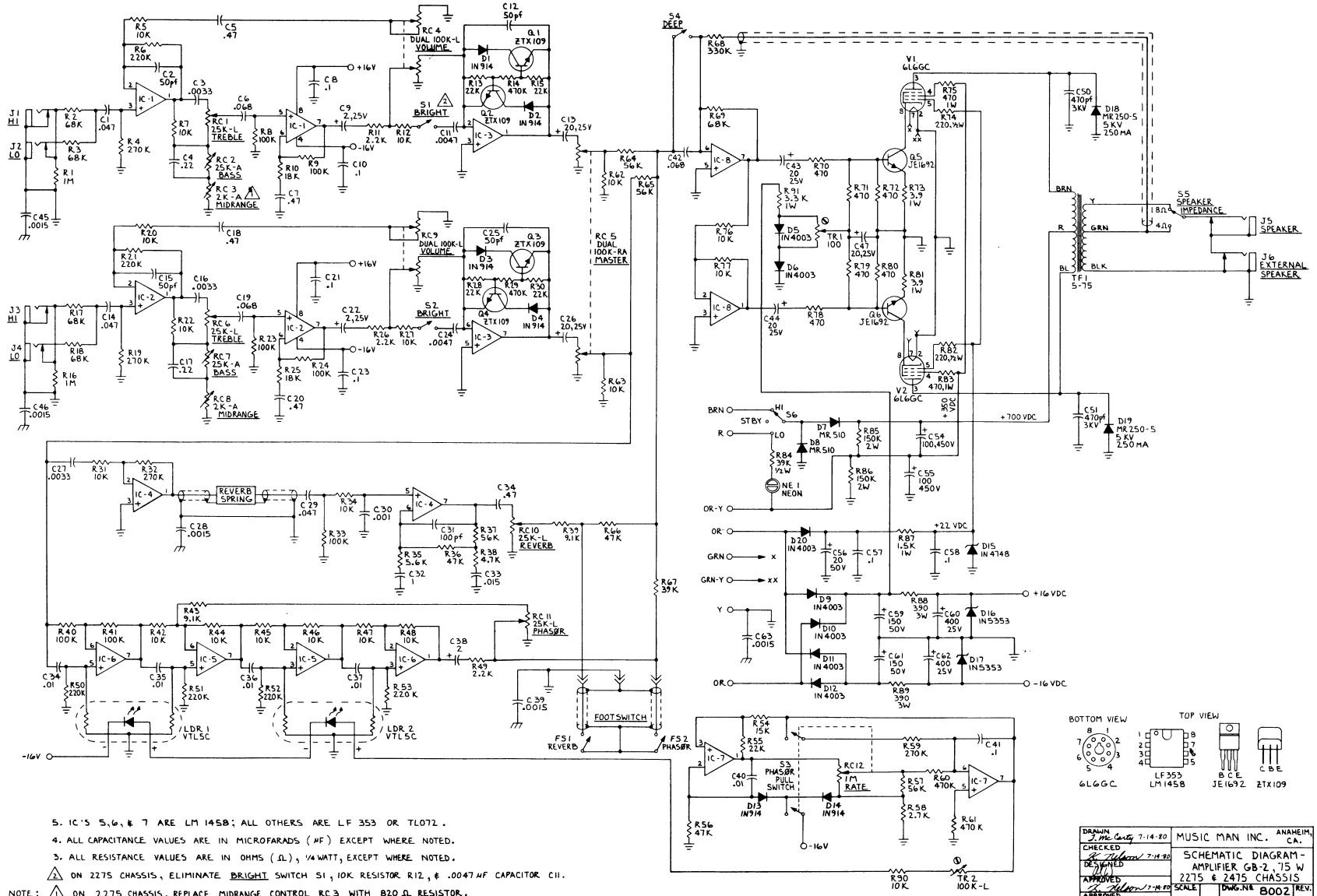

5. IC'S 5, 6, & 7 ARE LM 1458; ALL OTHERS ARE LF 353 OR TL072.
4. ALL CAPACITANCE VALUES ARE IN MICROFARADS (μF) EXCEPT WHERE NOTED.
3. ALL RESISTANCE VALUES ARE IN OHMS (Ω), 1/4 WATT, EXCEPT WHERE NOTED.
2. ON 2275 CHASSIS, ELIMINATE BRIGHT SWITCH S1, 10K RESISTOR R12, & .0047 μF CAPACITOR C11.

NOTE: 1. ON 2275 CHASSIS, REPLACE MIDRANGE CONTROL RC 3 WITH 820 Ω RESISTOR.

DRAWN J. McCarty 7-14-80	MUSIC MAN INC.	ANAHEIM, CA.
CHECKED 7-14-80	SCHEMATIC DIAGRAM - AMPLIFIER GB-2, 75 W 2275 & 2475 CHASSIS	
DESIGNED		
APPROVED 7-14-80	SCALE	DWG. NO. 8002 REV.
APPROVED 7-15-80		SHEET 1 OF 1

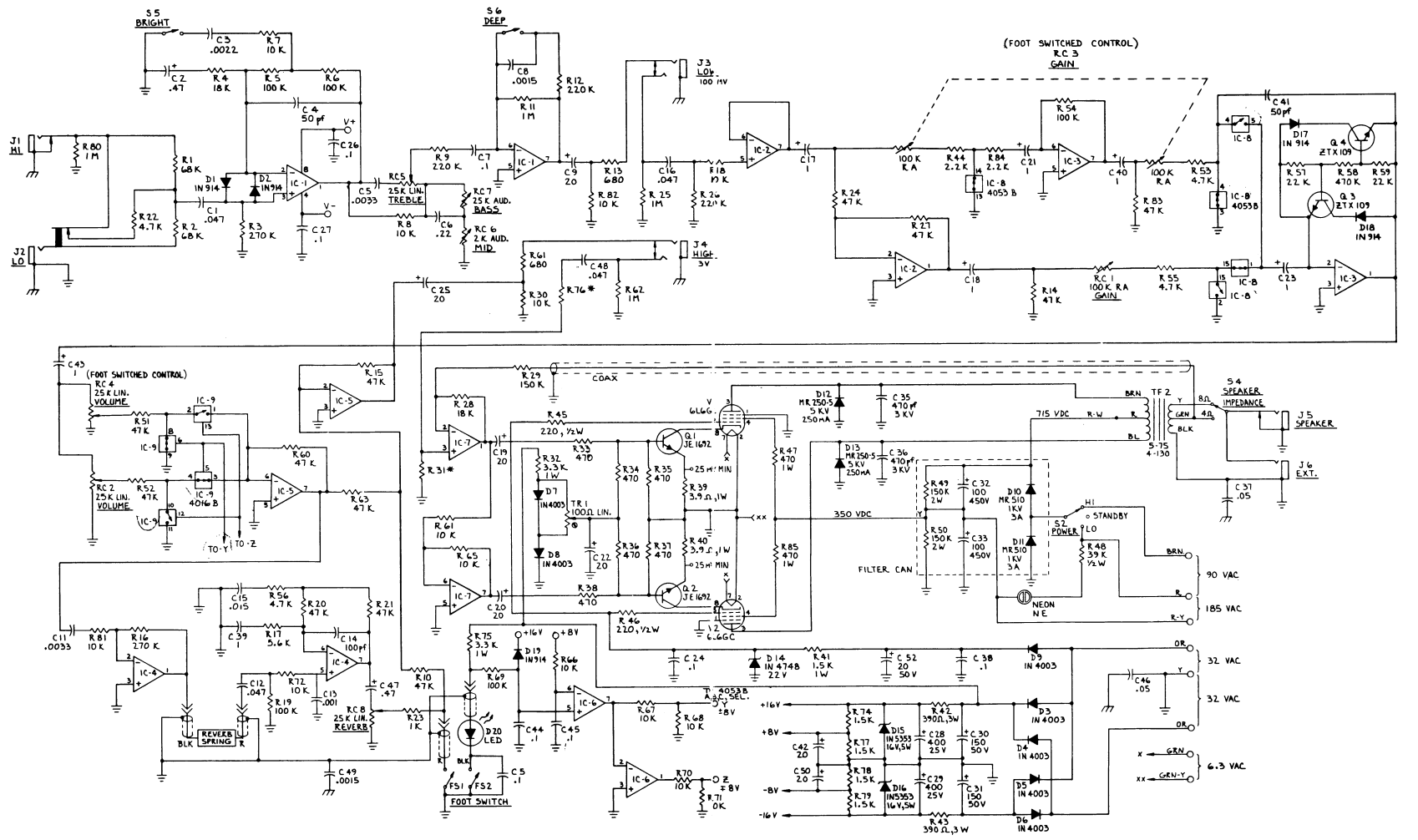

*COMPONENT	VALUES	
	65 W	100 W
R31	150 K	220 K
R76	56 K	22 K

4. IC-1, IC-3, IC-4 ARE LF 353 OR TL072 OP AMPS.
3. IC-2, IC-5, IC-6, IC-7 ARE LM 1458 OP AMPS.
2. ALL CAPACITANCE VALUES ARE IN MICROFARADS (μF) EXCEPT WHERE NOTED.
NOTE: 1. ALL RESISTANCE VALUES ARE IN OHMS (Ω) EXCEPT WHERE NOTED.

DRAWN J. McCarty 6-19-80	MUSIC MAN INC. ANAHEIM, CA.	
CHECKED M. Hogan 6-20-80	SCHEMATIC DIAGRAM - RD AMPLIFIER GD-2A	
DESIGNED		
APPROVED MW 6-30-80	SCALE	DWG. NO. 5001 REV.
APPROVED		SHEET 1 OF 1

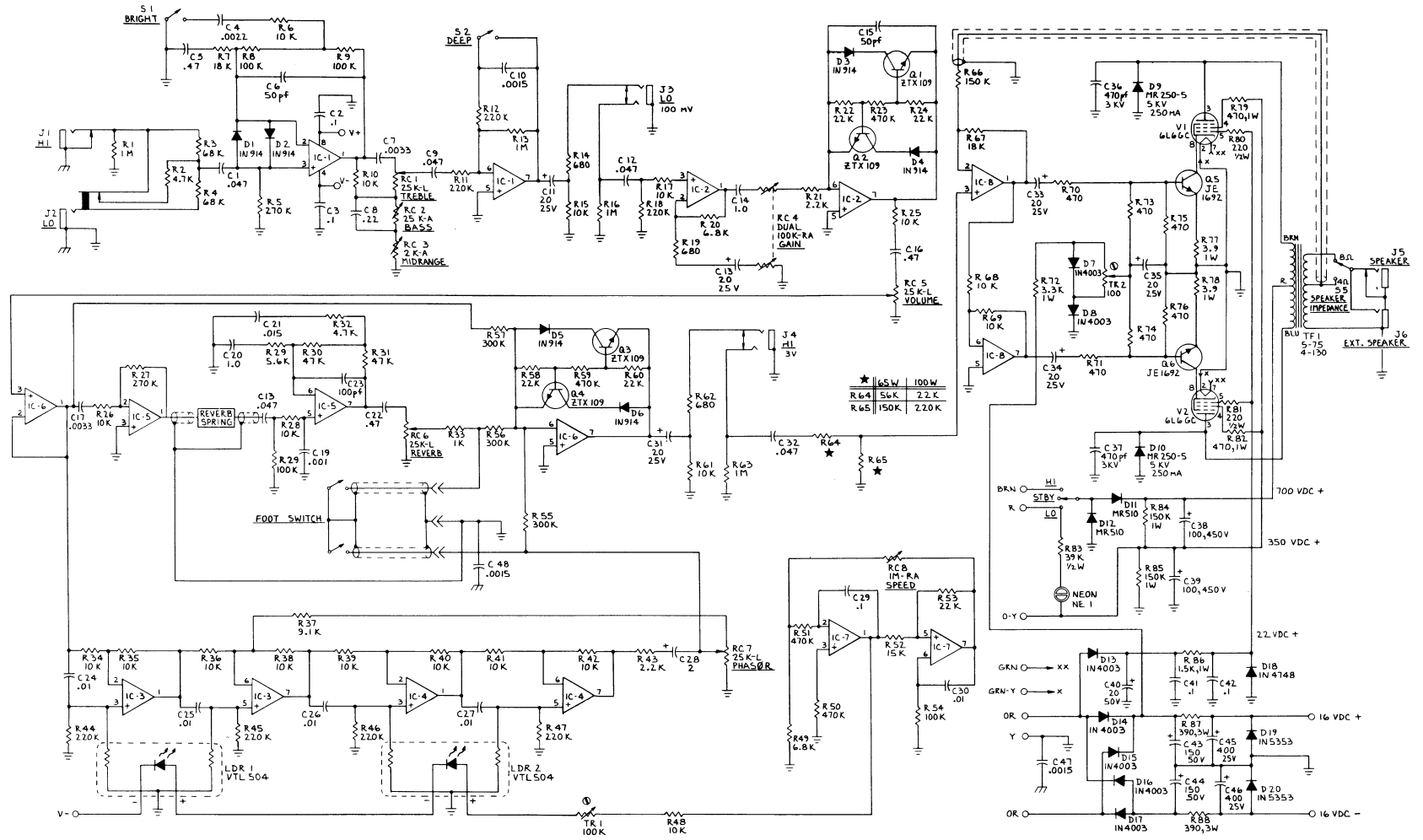

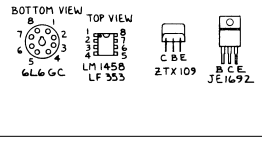

3. IC'S 1,2,5,&6 ARE LF 353. ALL OTHERS ARE LM 1458.

2. ALL CAPACITANCE VALUES ARE IN MICROFARADS (μF) EXCEPT WHERE NOTED.

NOTE: 1. ALL RESISTANCE VALUES ARE IN OHMS (Ω) EXCEPT WHERE NOTED.

DRAWN J. McCarty 6-27-80	MUSIC MAN INC. ANAHEIM, CA.	
CHECKED	SCHEMATIC DIAGRAM- RP AMPLIFIER GP-3A	
DESIGNED		
APPROVED	SCALE	DWG. NO 6001 REV.
APPROVED 7-8-80		SHEET 1 OF 1

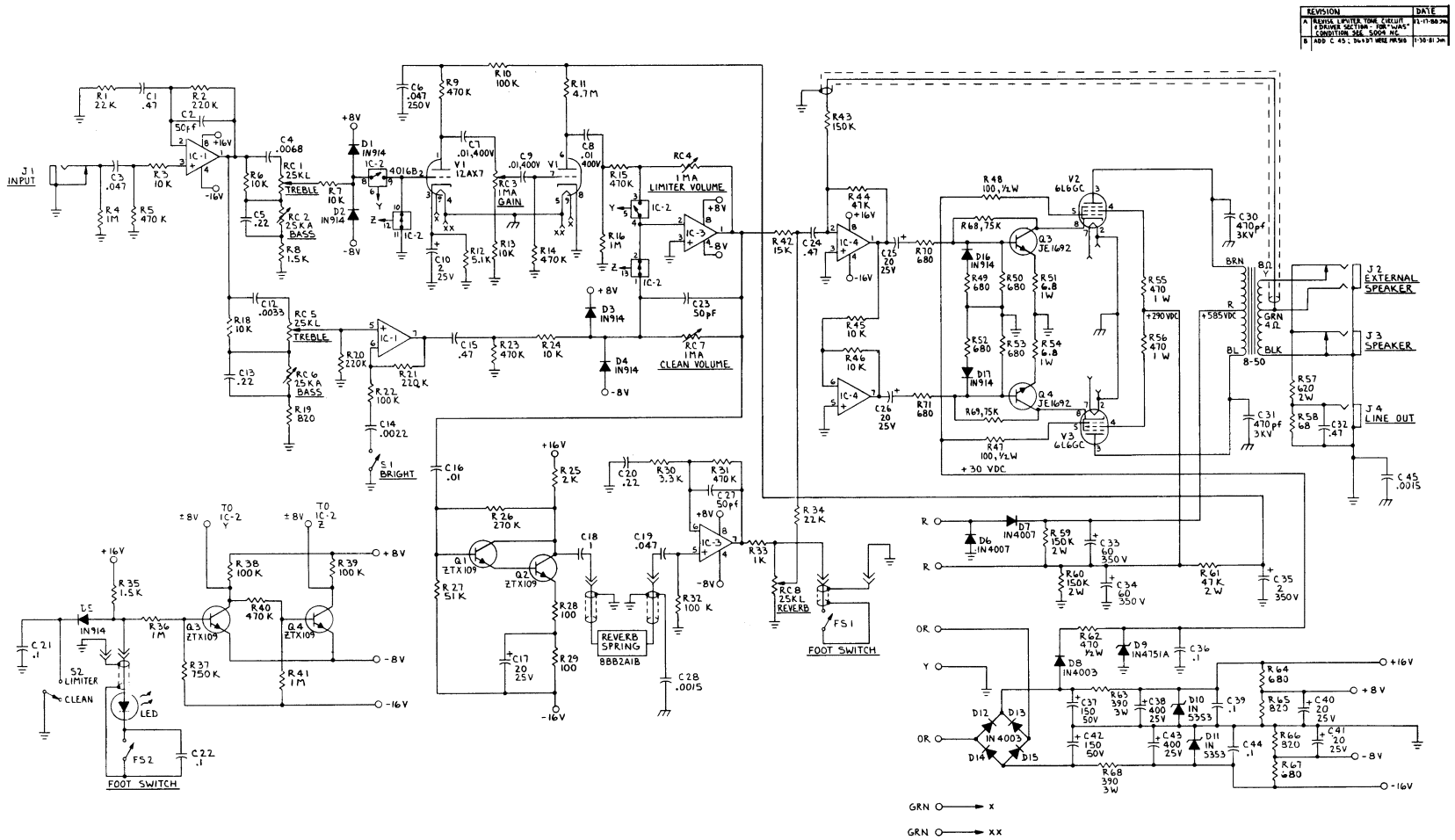

5. +8V & -8V ARE NOMINAL; ACTUAL VOLTAGE MAY VARY ± 1 VOLT.
4. IC-2 IS 4016B.
3. IC'S 1,3,& 4 ARE TL072.
2. ALL CAPACITANCE VALUES ARE IN MICROFARADS (μF) EXCEPT WHERE NOTED.
NOTE: 1. ALL RESISTANCE VALUES ARE IN OHMS (Ω), ¼ WATT, EXCEPT WHERE NOTED.

REVISION		DATE
A	REVISE LIMITER TONE CIRCUIT & DRIVER SECTION - FOR "WAS" CONDITION SEE 5004 NC	12-17-80 JM
B	ADD C 45; DELETE WIRE NR 5/8	1-30-81 JM

DRAWN J McCarty 9-3-80	MUSIC MAN INC. ANAHEIM, CA.
CHECKED 9-4-80	SCHEMATIC DIAGRAM- RD-50 AMPLIFIER
DESIGNED T. WALKER	
APPROVED	SCALE / DWG. NR 5004 / REV. B
APPROVED	SHEET 1 OF 1

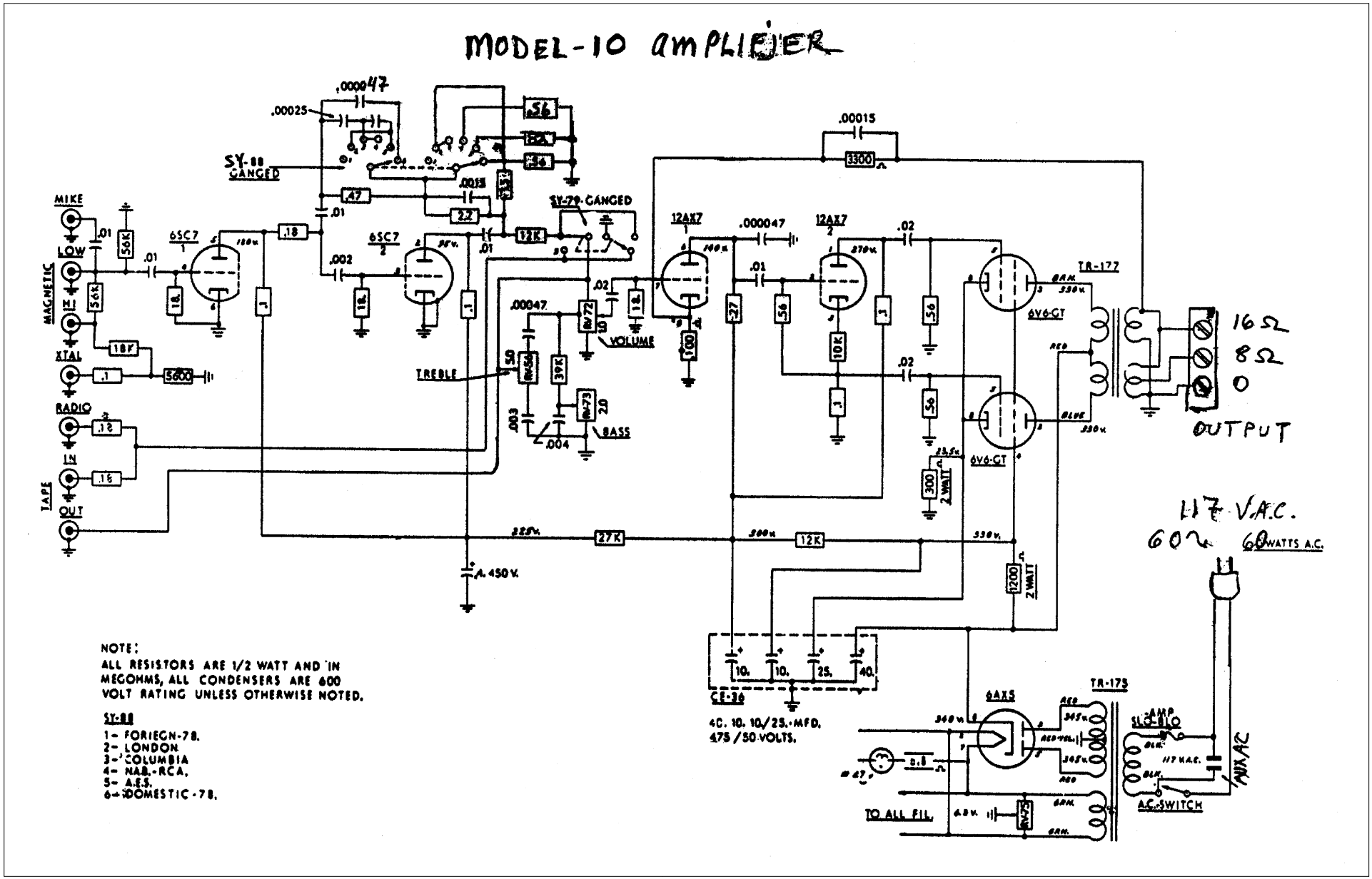
MODEL-10 AMPLIFIER
MIKE
LOW
MAGNETIC
HI
XTAL
RADIO
IN
TAPE
OUT
6SC7
6SC7
12AX7
12AX7
6V6-GT
6V6-GT
6AX5
TR-177
TR-175
SY-88 GANGED
SY-79 GANGED
TREBLE
VOLUME
BASS
CE-36
4C. 10. 10/25.-MFD. 475/50 VOLTS.
TO ALL FIL.
A.C. SWITCH
AMP
SLO-BLO
117 V.A.C.
AUX A.C.
16 Ω
8 Ω
0
OUTPUT
117 V.A.C.
60~ 60 WATTS A.C.
450 V.
NOTE:
ALL RESISTORS ARE 1/2 WATT AND IN MEGOHMS, ALL CONDENSERS ARE 600 VOLT RATING UNLESS OTHERWISE NOTED.
SY-88
1- FORIEGN-78.
2- LONDON
3- COLUMBIA
4- NAB.-RCA.
5- A.E.S.
6- DOMESTIC-78.

120w GRAPHIC MK II **(EARLY MODEL)**

Orange

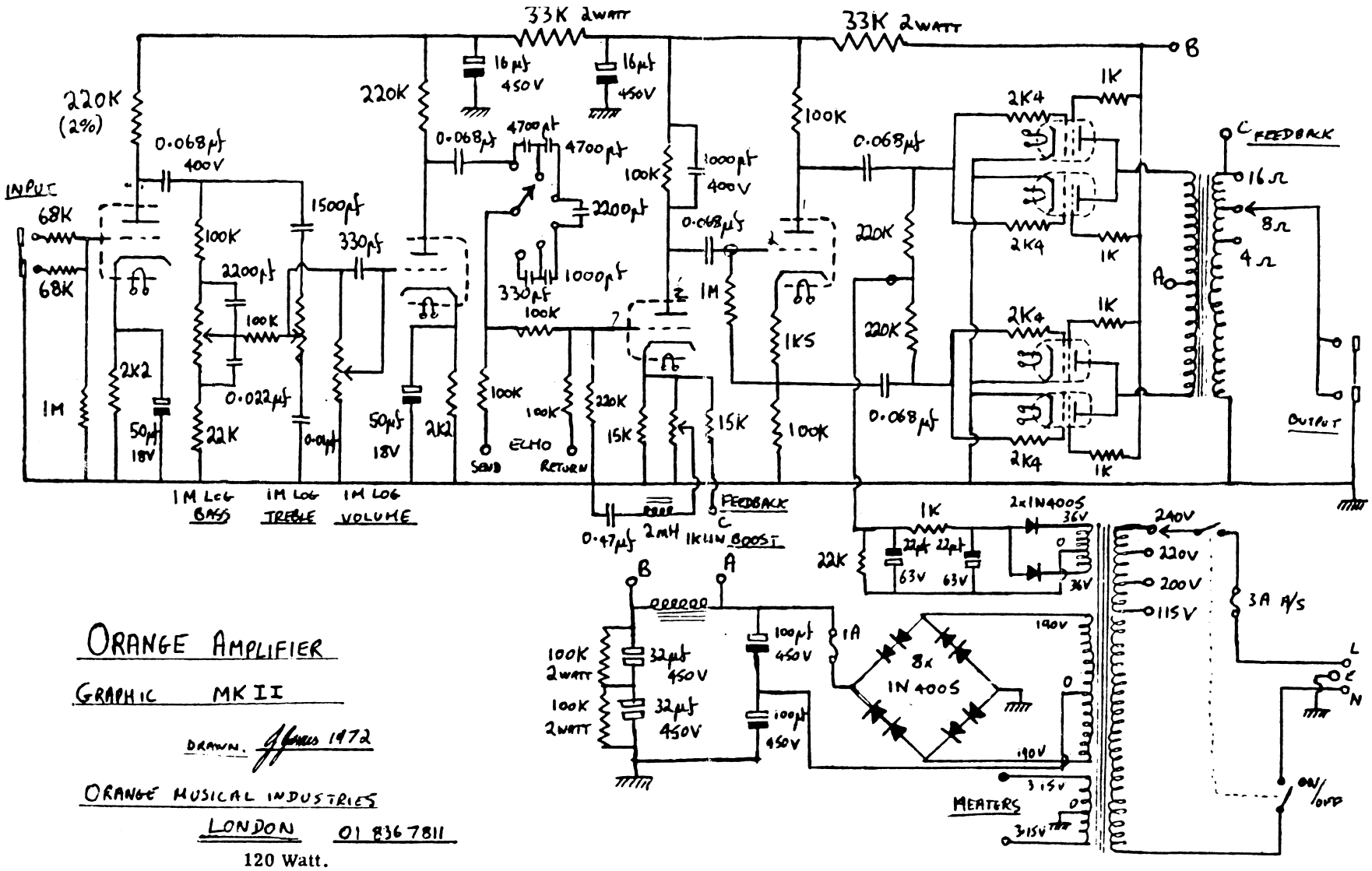

ORANGE AMPLIFIER

GRAPHIC MK II

DRAWN. 1972

ORANGE MUSICAL INDUSTRIES

LONDON 01 836 7811

120 Watt.

120w GRAPHIC MK II

Orange

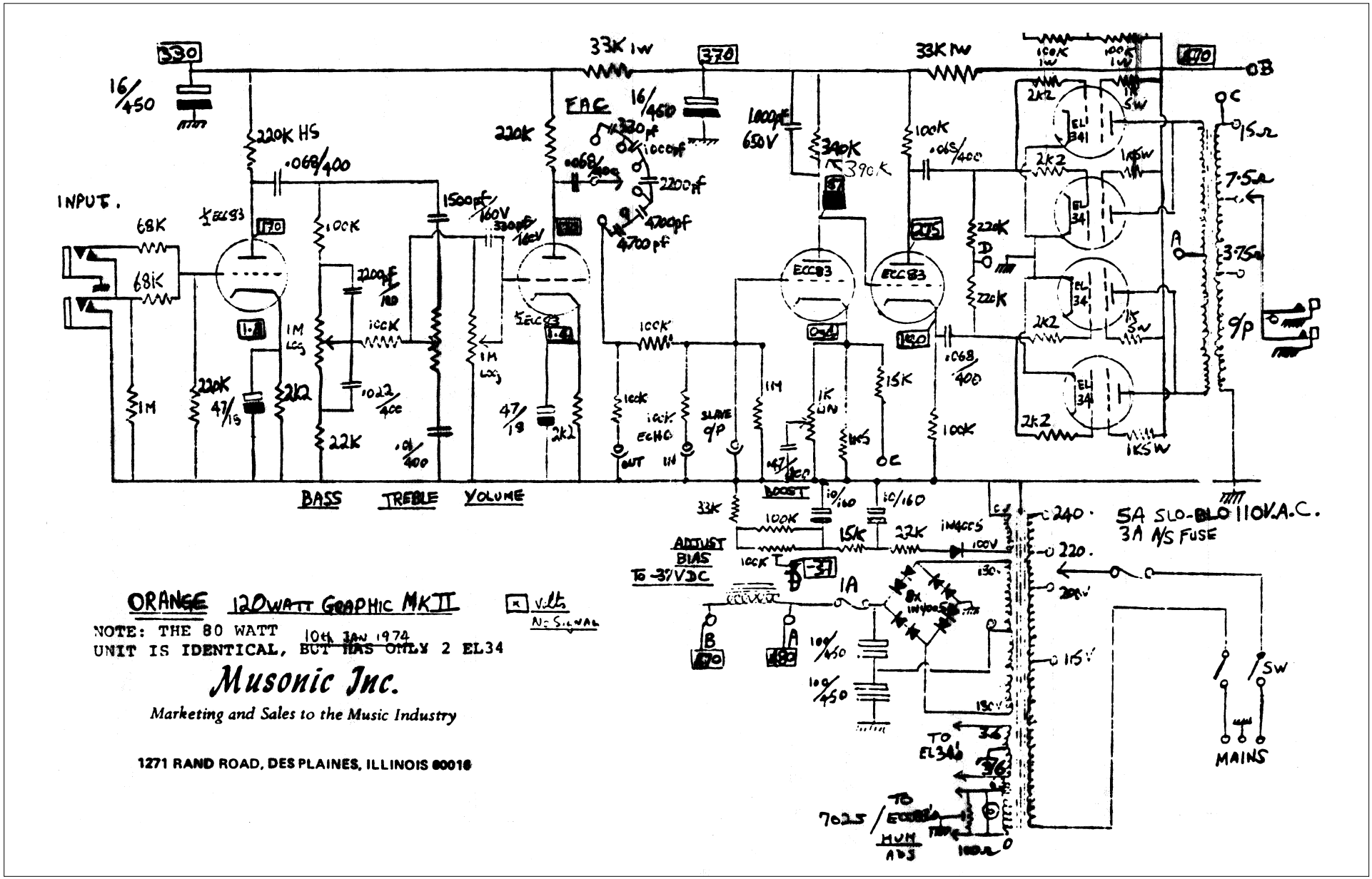

120w GRAPHIC MK II **(ALT. DIAGRAM)**

Orange

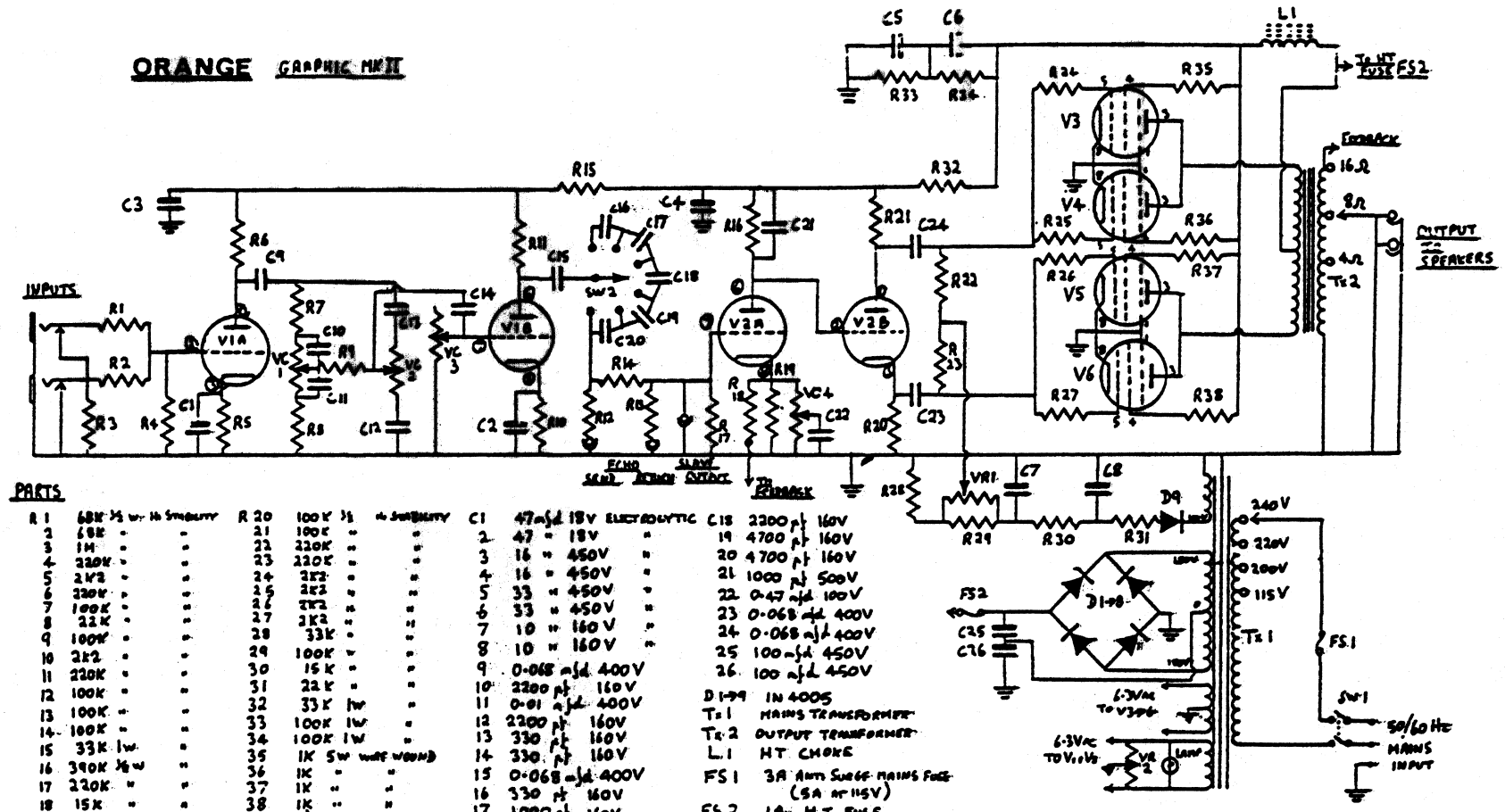

PARTS

R1	68K ½ w	1% Stability	R20	100K ½	1% Stability	C1	47 µfd 18V	Electrolytic	C18	2200 pf	160V
2	68K "	"	21	100K "	"	2	47 " 18V	"	19	4700 pf	160V
3	1M "	"	22	220K "	"	3	16 " 450V	"	20	4700 pf	160V
4	220K "	"	23	220K "	"	4	16 " 450V	"	21	1000 pf	500V
5	2K2 "	"	24	2K2 "	"	5	33 " 450V	"	22	0·47 µfd	100V
6	220K "	"	25	2K2 "	"	6	33 " 450V	"	23	0·068 µfd	400V
7	100K "	"	26	2K2 "	"	7	10 " 160V	"	24	0·068 µfd	400V
8	22K "	"	27	2K2 "	"	8	10 " 160V	"	25	100 µfd	450V
9	100K "	"	28	33K "	"	9	0·068 µfd	400V	26	100 µfd	450V
10	2K2 "	"	29	100K "	"	10	2200 pf	160V			
11	220K "	"	30	15K "	"	11	0·01 µfd	400V			
12	100K "	"	31	22K "	"	12	2200 pf	160V			
13	100K "	"	32	33K 1w	"	13	330 pf	160V			
14	100K "	"	33	100K 1W	"	14	330 pf	160V			
15	33K 1w	"	34	100K 1W	"	15	0·068 µfd	400V			
16	390K ½ w	"	35	1K 5W	wire wound	16	330 pf	160V			
17	220K "	"	36	1K "	"	17	1000 pf	160V			
18	15K "	"	37	1K "	"						
19	1K5 "	"	38	1K "	"						

D1-D4	IN 4005						
Tx1	Mains Transformer						
Tx2	Output Transformer						
L1	HT Choke						
FS1	3A Anti Surge Mains Fuse (5A at 115V)						
FS2	1A HT Fuse						

V1A-B	ECC 83	SW1	Double Pole Mains Switch	VC1	1MΩ Log	for Bass	VR1 100K Preset (Set Bias).
V2A-B	ECC 83	SW2	2 Pole 6 way F.A.C. Switch	VC2	1MΩ "	" Treble	VR2 100R " (Set min hum)
V3-V6	EL 34			VC3	1MΩ "	" Volume	
				VC4	1KΩ Lin	" Boost	

NB. 80 watt version identical but Tx2 different and V3 & 6 R 24, 27, 36, 38 omitted

ORANGE MUSICAL INDUSTRIES LIMITED

17 Upland Road, Bexleyheath, Kent. Telephone: 01-304 6717

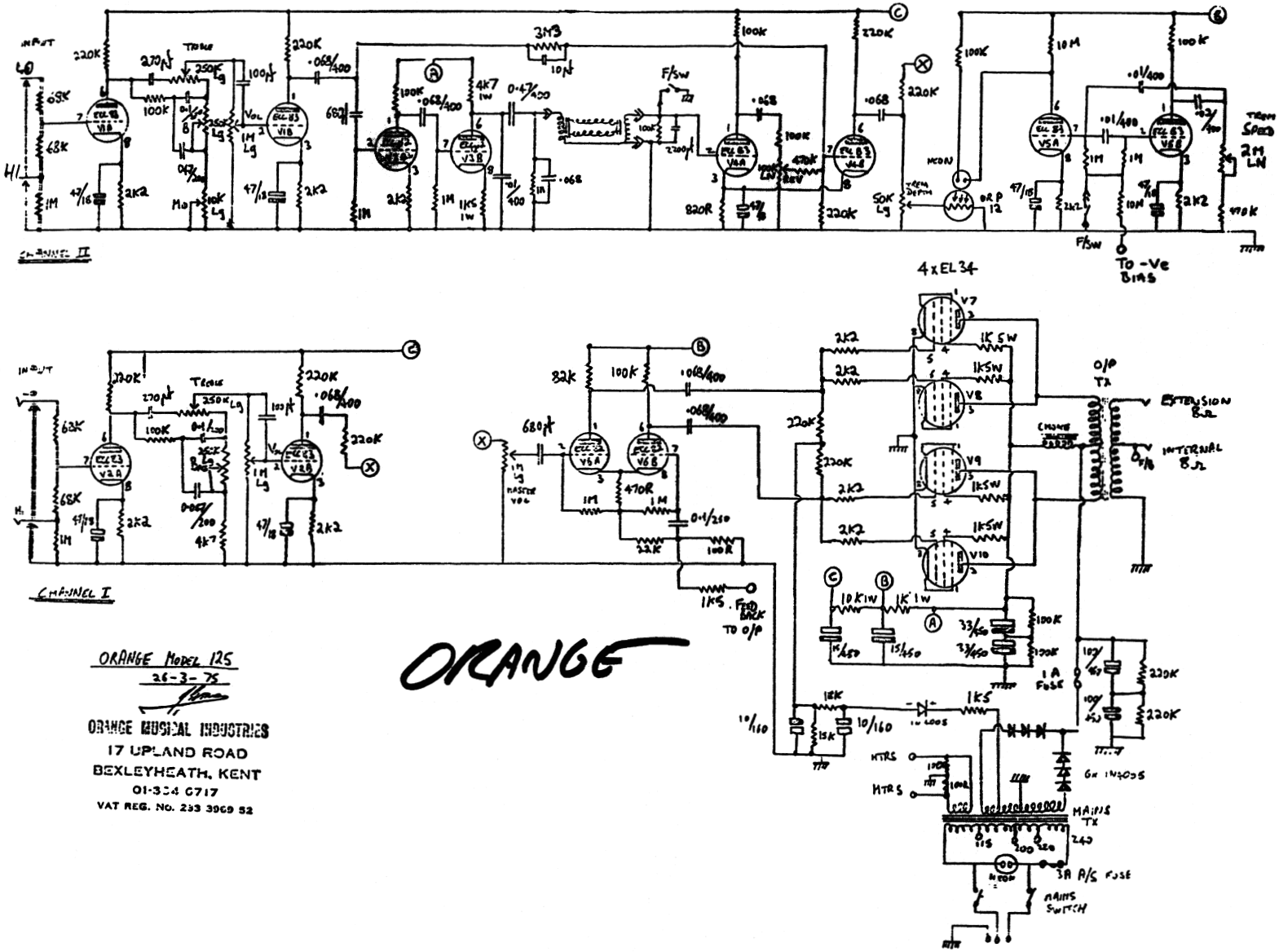
CHANNEL II
CHANNEL I
4xEL34
To -Ve BIAS
O/P TX
EXTENSION BOX
INTERNAL 8Ω
MAINS TX
3A A/S FUSE
MAINS SWITCH
1A FUSE
ORANGE
ORANGE MODEL 12S
26-3-75
ORANGE MUSICAL INDUSTRIES
17 UPLAND ROAD
BEXLEYHEATH, KENT
01-304 0717
VAT REG. No. 233 3969 52

ARTIST POWER AMP

Peavey

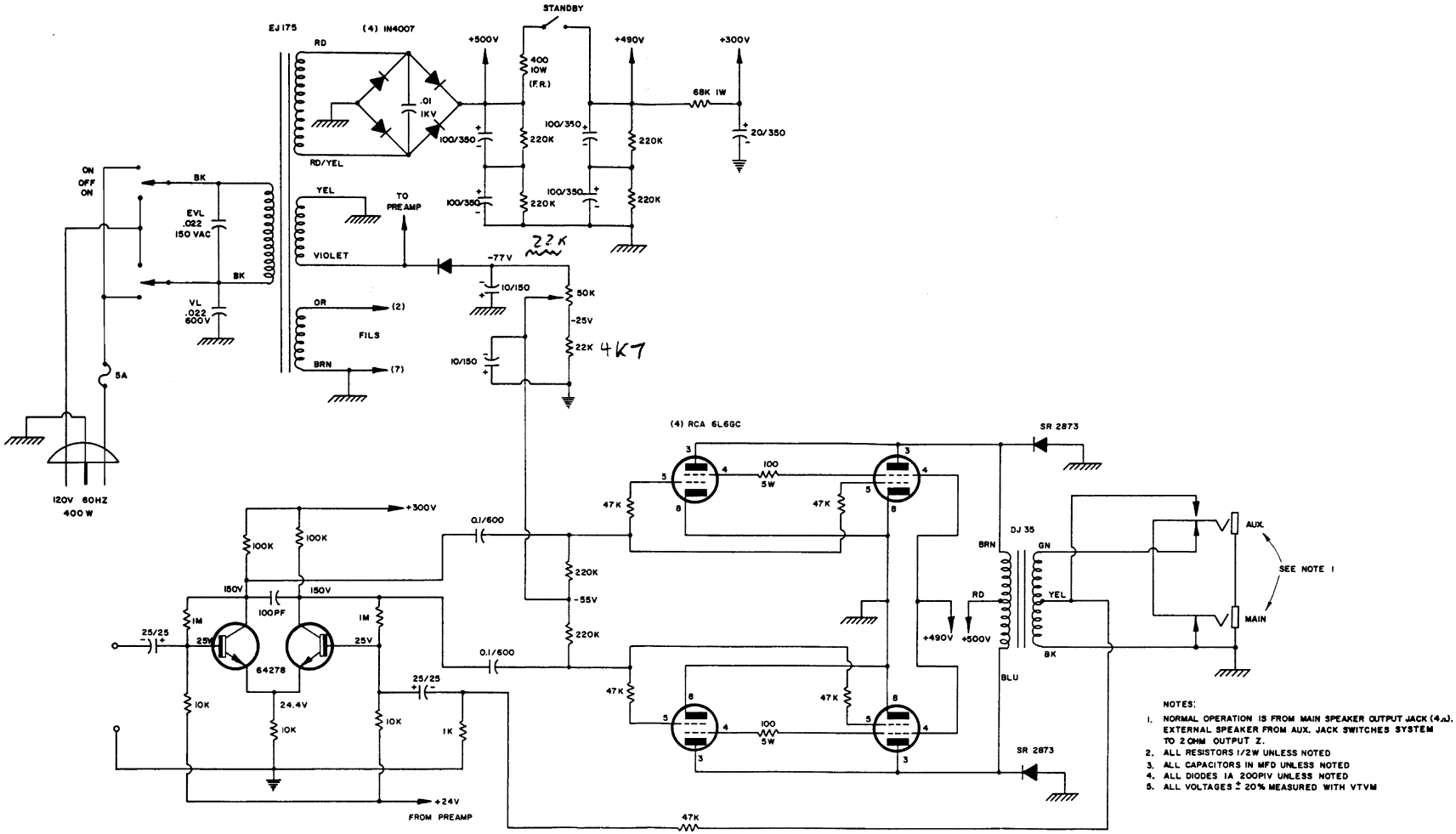

NOTES:

1. NORMAL OPERATION IS FROM MAIN SPEAKER OUTPUT JACK (4Ω). EXTERNAL SPEAKER FROM AUX. JACK SWITCHES SYSTEM TO 2 OHM OUTPUT Z.
2. ALL RESISTORS 1/2W UNLESS NOTED
3. ALL CAPACITORS IN MFD UNLESS NOTED
4. ALL DIODES 1A 200PIV UNLESS NOTED
5. ALL VOLTAGES ± 20% MEASURED WITH VTVM

ARTIST
(POWER AMP)

P/N 81501195

PEAVEY ELECTRONICS
MERIDIAN MISS

DRAWN BY: DATE: 8-1-75
CHECKED BY:
APPROVED BY:

ARTIST VT PRE-AMP

Peavey

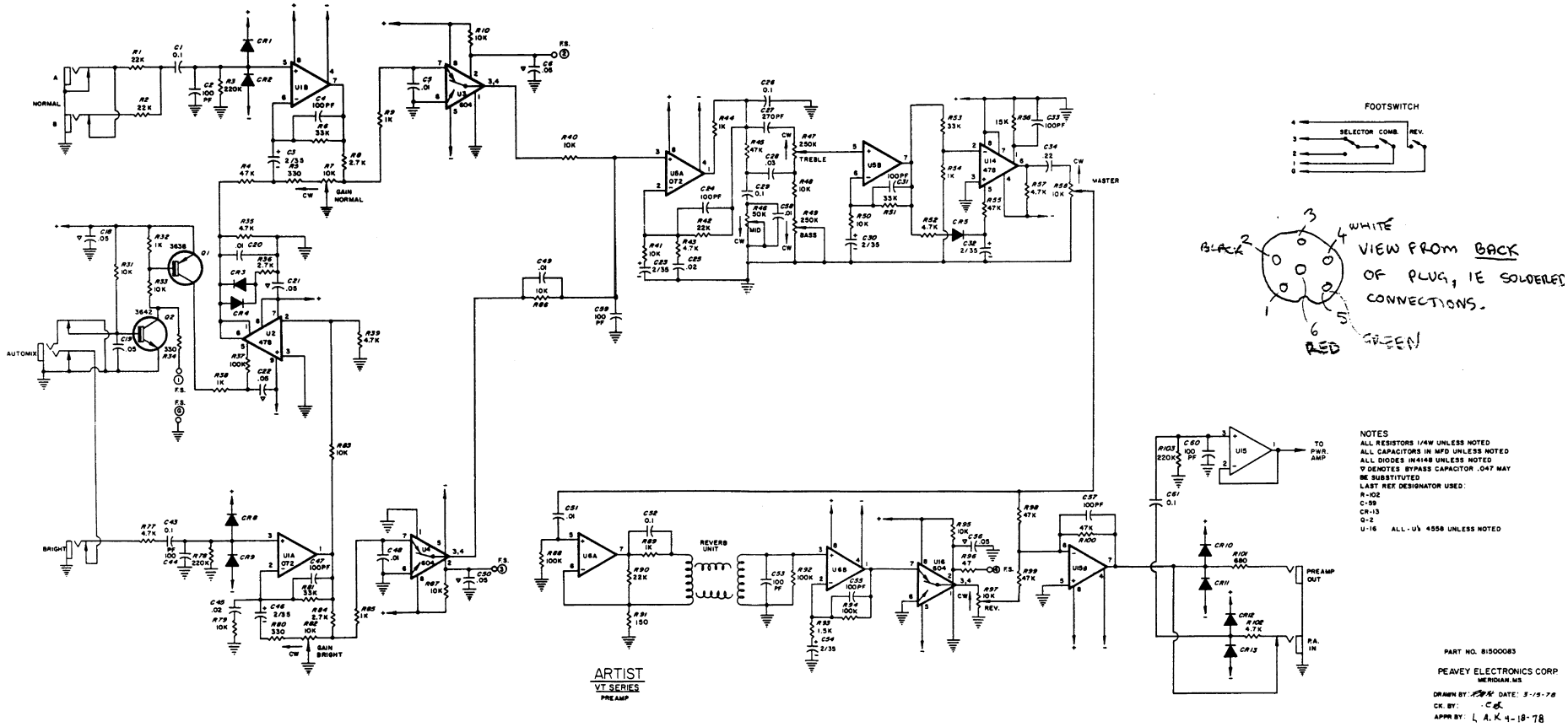

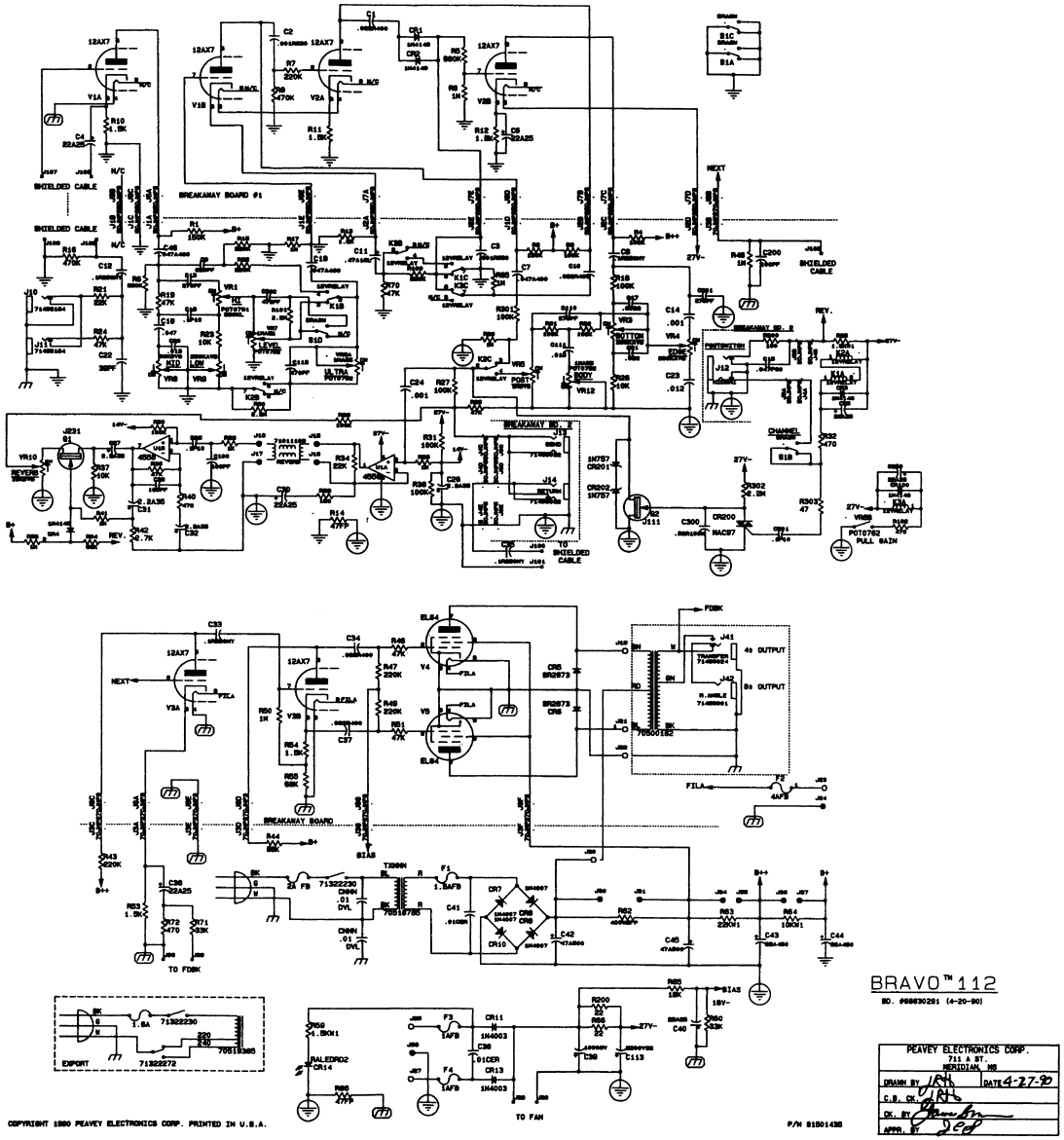
BRAVO™ 112
PEAVEY ELECTRONICS CORP.
711 A ST.
MERIDIAN, MS
COPYRIGHT 1990 PEAVEY ELECTRONICS CORP. PRINTED IN U.S.A.

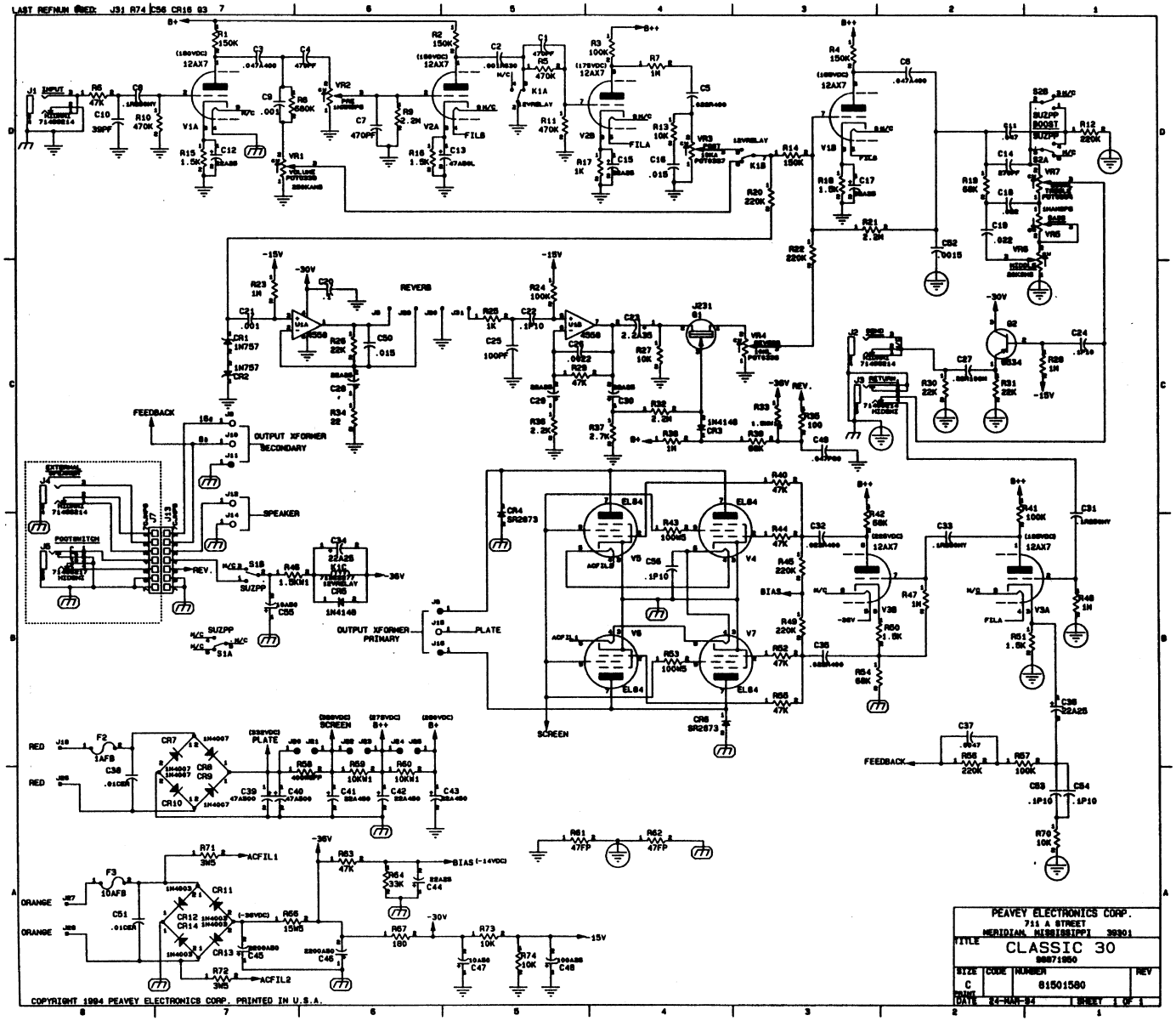
PEAVEY ELECTRONICS CORP.
711 A STREET
MERIDIAN, MISSISSIPPI 39301
TITLE
CLASSIC 30
SIZE C
CODE
NUMBER 81501580
REV
DATE 24-MAR-94
SHEET 1 OF 1
COPYRIGHT 1994 PEAVEY ELECTRONICS CORP. PRINTED IN U.S.A.
INPUT
REVERB
FEEDBACK
OUTPUT XFORMER SECONDARY
SPEAKER
FOOTSWITCH
OUTPUT XFORMER PRIMARY
PLATE
SCREEN
BIAS
RED
ORANGE
ACFIL1
ACFIL2

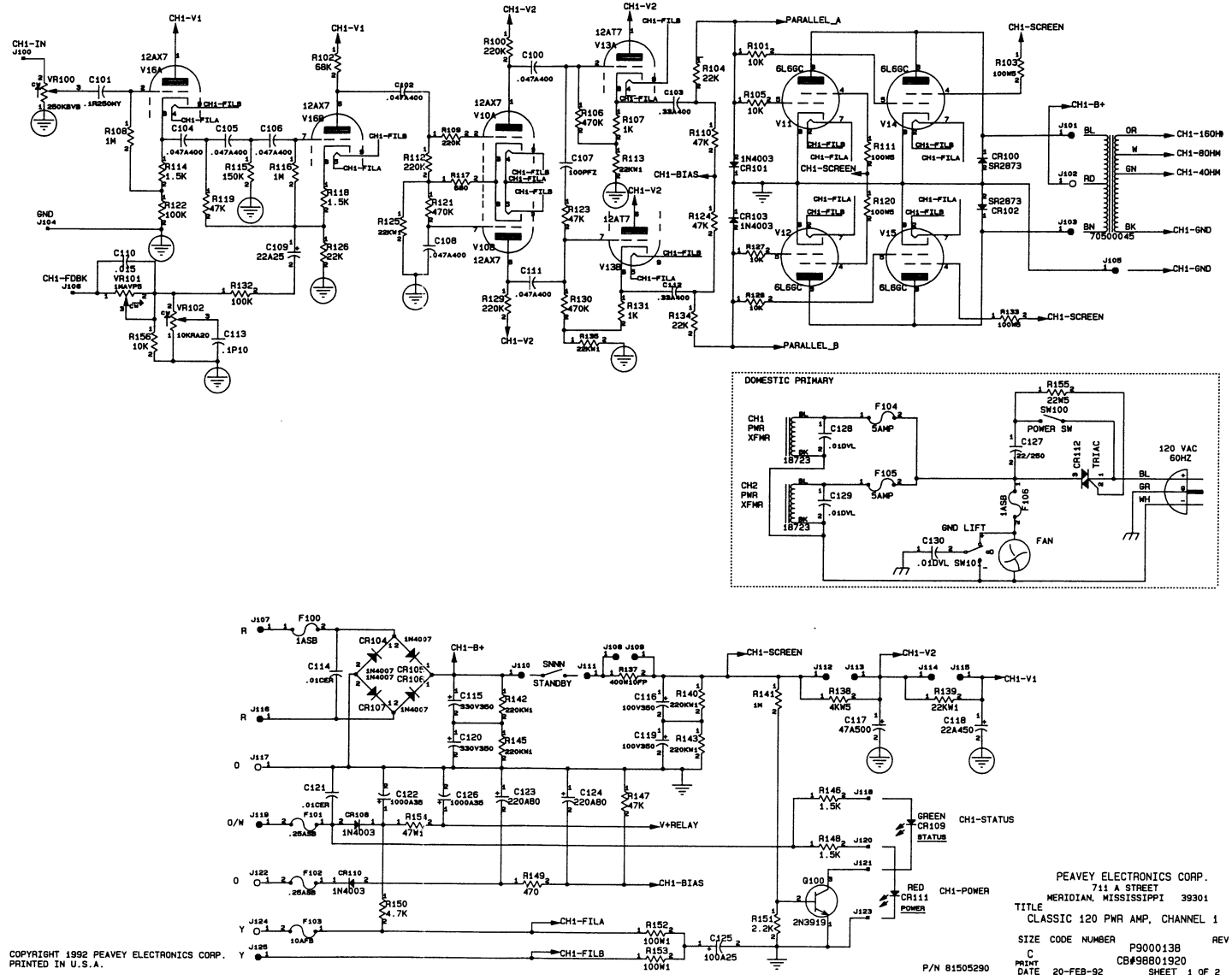
CH1-IN
CH1-V1
CH1-V2
CH1-FILA
CH1-FILB
CH1-BIAS
CH1-FDBK
GND
PARALLEL_A
PARALLEL_B
CH1-SCREEN
CH1-B+
CH1-160HM
CH1-80HM
CH1-40HM
CH1-GND
DOMESTIC PRIMARY
CH1 PWR XFMR
CH2 PWR XFMR
POWER SW
TRIAC
120 VAC 60HZ
GND LIFT
FAN
STANDBY
V+RELAY
CH1-STATUS
CH1-POWER
GREEN CR109 STATUS
RED CR111 POWER
PEAVEY ELECTRONICS CORP.
711 A STREET
MERIDIAN, MISSISSIPPI 39301
TITLE
CLASSIC 120 PWR AMP, CHANNEL 1
SIZE CODE NUMBER REV
C P9000138
CB#98801920
PRINT DATE 20-FEB-92 SHEET 1 OF 2
P/N 81505290
COPYRIGHT 1992 PEAVEY ELECTRONICS CORP.
PRINTED IN U.S.A.

LAST REF NUMBER USED: Q200 V26 F203 R256 J226 CR212 C226 VR202

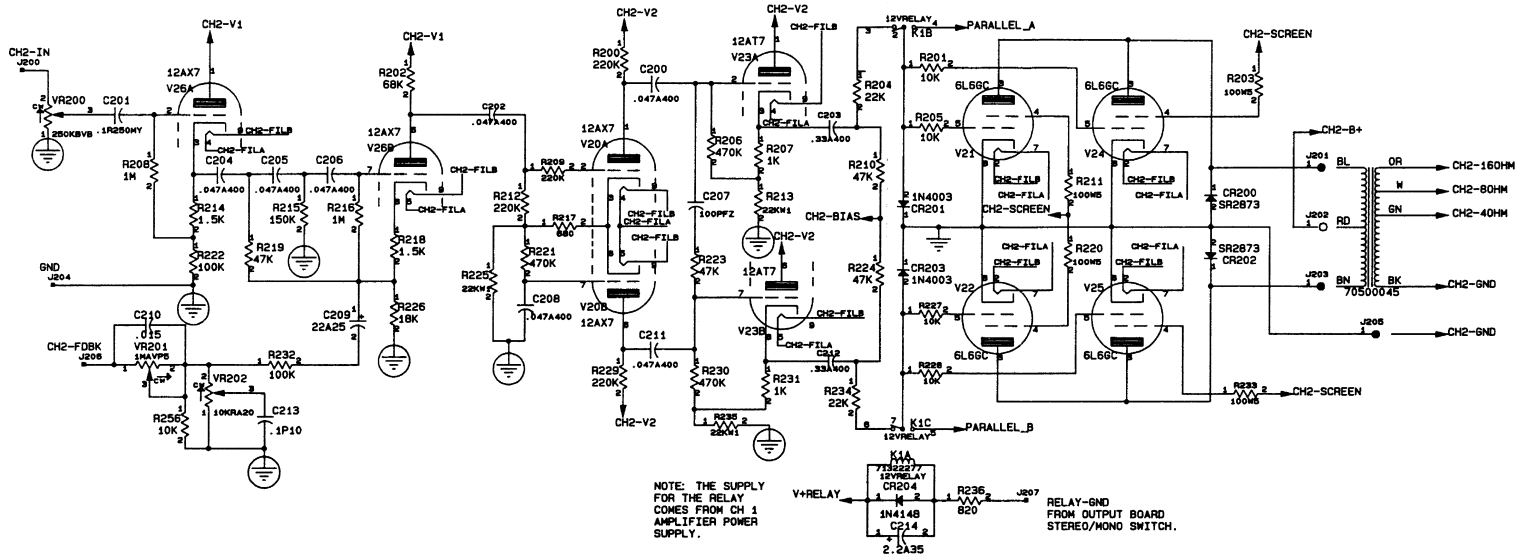

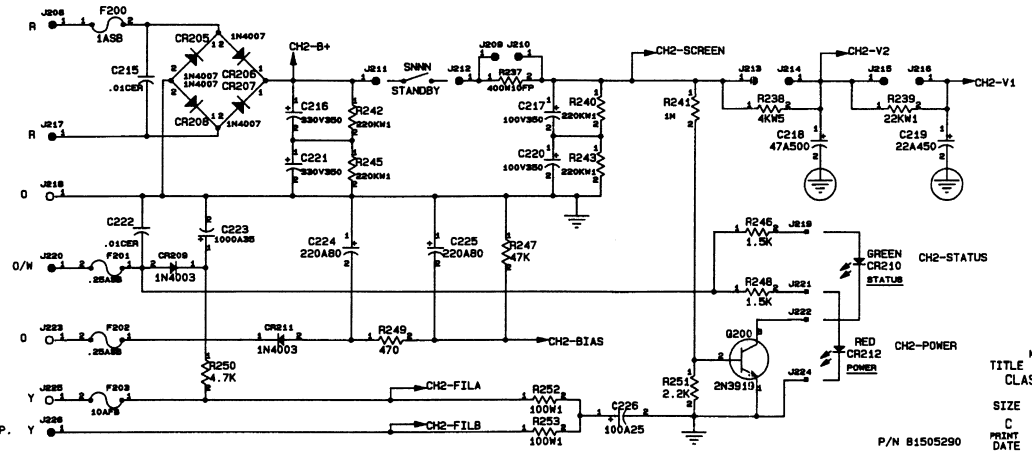

PEAVEY ELECTRONICS CORP.
711 A STREET
MERIDIAN, MISSISSIPPI 39301

TITLE
CLASSIC 120 PWR AMP, CHANNEL 2

SIZE C | CODE NUMBER P9000138 CB#98801920 | REV

PRINT DATE 20-FEB-92 | SHEET 2 OF 2

P/N 81505290

COPYRIGHT 1992 PEAVEY ELECTRONICS CORP.
PRINTED IN U.S.A.

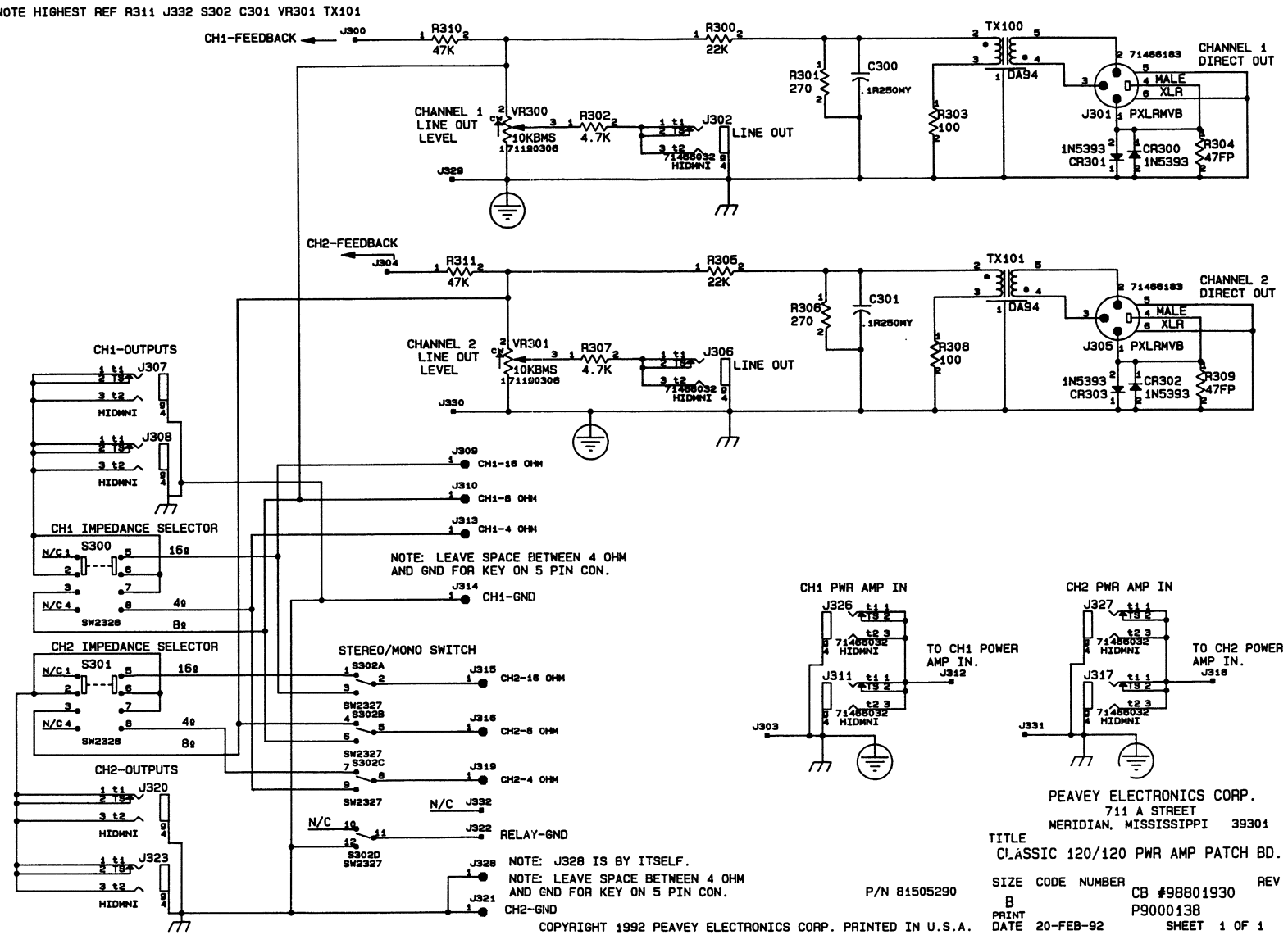
NOTE HIGHEST REF R311 J332 S302 C301 VR301 TX101
CH1-FEEDBACK
J300
R310
47K
R300
22K
TX100
CHANNEL 1
DIRECT OUT
R301
270
C300
.1R250MY
DA94
MALE
XLR
J301
PXLRMVB
CHANNEL 1
LINE OUT
LEVEL
VR300
10KBMS
171190306
R302
4.7K
J302
LINE OUT
R303
100
1N5393
CR301
CR300
1N5393
R304
47FP
J329
CH2-FEEDBACK
J304
R311
47K
R305
22K
TX101
CHANNEL 2
DIRECT OUT
R306
270
C301
.1R250MY
DA94
MALE
XLR
J305
PXLRMVB
CHANNEL 2
LINE OUT
LEVEL
VR301
10KBMS
171190306
R307
4.7K
J306
LINE OUT
R308
100
1N5393
CR303
CR302
1N5393
R309
47FP
J330
CH1-OUTPUTS
J307
HIDMNI
J308
HIDMNI
CH1 IMPEDANCE SELECTOR
S300
16Ω
4Ω
8Ω
SW2328
CH2 IMPEDANCE SELECTOR
S301
16Ω
4Ω
8Ω
SW2328
CH2-OUTPUTS
J320
HIDMNI
J323
HIDMNI
J309
CH1-16 OHM
J310
CH1-8 OHM
J313
CH1-4 OHM
NOTE: LEAVE SPACE BETWEEN 4 OHM
AND GND FOR KEY ON 5 PIN CON.
J314
CH1-GND
STEREO/MONO SWITCH
S302A
J315
CH2-16 OHM
SW2327
S302B
J316
CH2-8 OHM
SW2327
S302C
J319
CH2-4 OHM
SW2327
N/C
J332
N/C
J322
RELAY-GND
S302D
SW2327
J328
NOTE: J328 IS BY ITSELF.
NOTE: LEAVE SPACE BETWEEN 4 OHM
AND GND FOR KEY ON 5 PIN CON.
J321
CH2-GND
CH1 PWR AMP IN
J326
J311
TO CH1 POWER
AMP IN.
J312
J303
CH2 PWR AMP IN
J327
J317
TO CH2 POWER
AMP IN.
J318
J331
HIDMNI
PEAVEY ELECTRONICS CORP.
711 A STREET
MERIDIAN, MISSISSIPPI 39301
TITLE
CLASSIC 120/120 PWR AMP PATCH BD.
P/N 81505290
SIZE CODE NUMBER REV
B CB #98801930
P9000138
PRINT DATE 20-FEB-92
SHEET 1 OF 1
COPYRIGHT 1992 PEAVEY ELECTRONICS CORP. PRINTED IN U.S.A.

MACE DEUCE **PREAMP**

Peavey

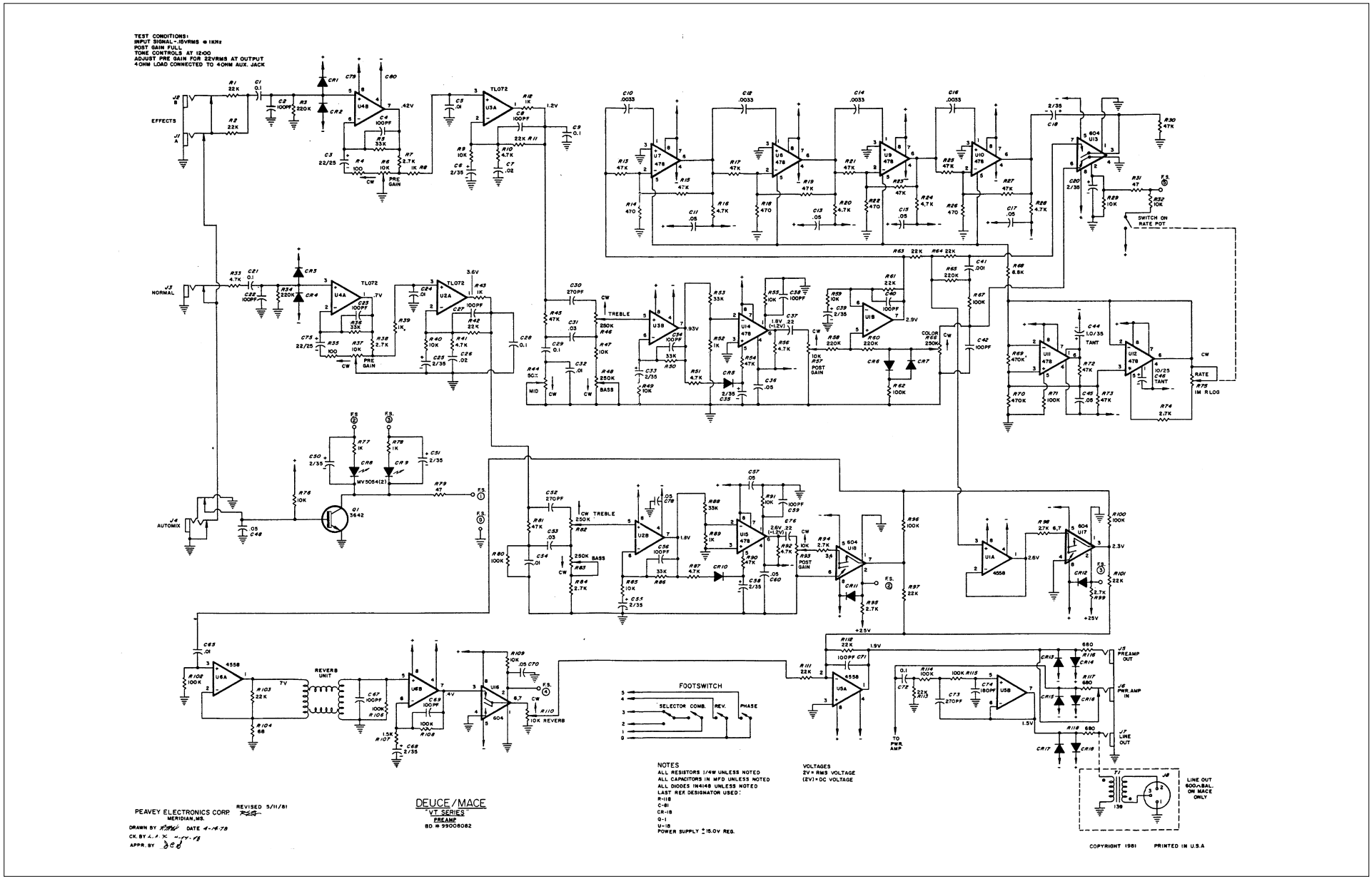

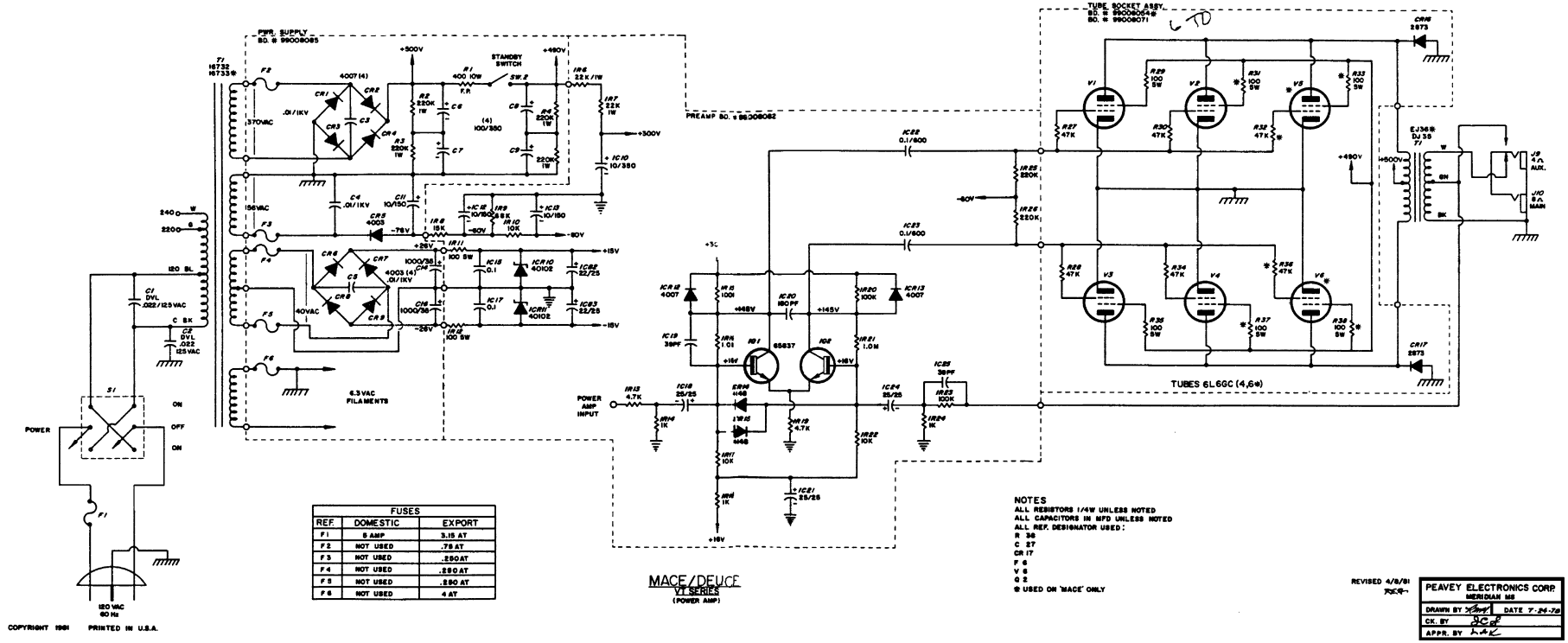

FUSES		
REF.	DOMESTIC	EXPORT
F1	5 AMP	3.15 AT
F2	NOT USED	.75 AT
F3	NOT USED	.250 AT
F4	NOT USED	.250 AT
F5	NOT USED	.250 AT
F6	NOT USED	4 AT

NOTES
ALL RESISTORS 1/4W UNLESS NOTED
ALL CAPACITORS IN MFD UNLESS NOTED
ALL REF. DESIGNATOR USED:
R 36
C 27
CR 17
F 6
V 6
G 2
* USED ON 'MACE' ONLY

COPYRIGHT 1981 PRINTED IN U.S.A.

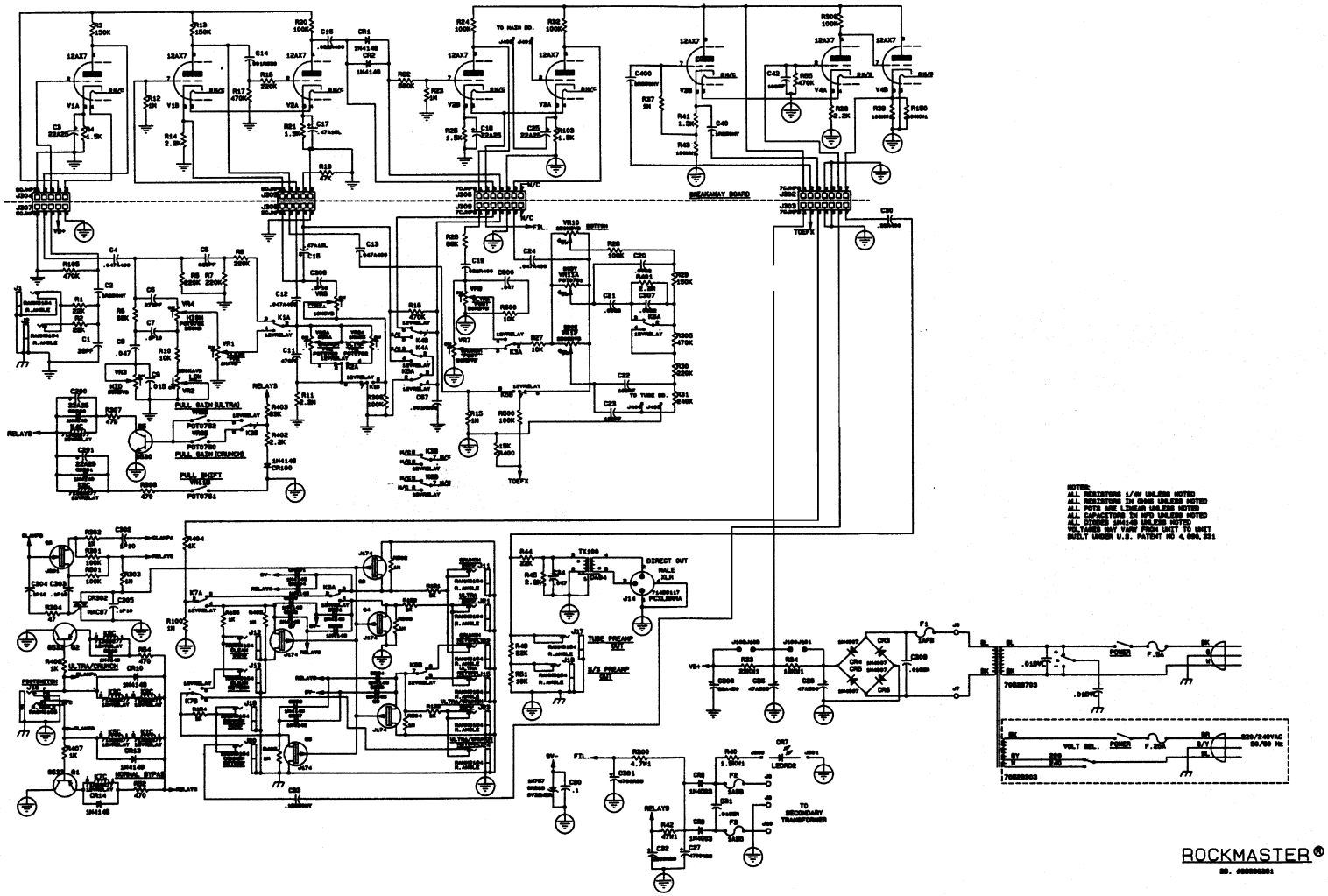

NOTES:
ALL RESISTORS 1/4W UNLESS NOTED
ALL RESISTORS IN OHMS UNLESS NOTED
ALL POTS ARE LINEAR UNLESS NOTED
ALL CAPACITORS IN MFD UNLESS NOTED
ALL DIODES 1N4148 UNLESS NOTED
VOLTAGES MAY VARY FROM UNIT TO UNIT
BUILT UNDER U.S. PATENT NO 4,888,531

PEAVEY ELECTRONICS CORP.
711 A ST.
MERIDIAN, MS

DRAWN BY JRH DATE 2-1-91
C.S. CK. JRH
CK. BY
APPR. BY

P/N 01201480

COPYRIGHT 1991 PEAVEY ELECTRONICS CORP. PRINTED IN U.S.A.

STANDARD **PA PREAMP**

Peavey

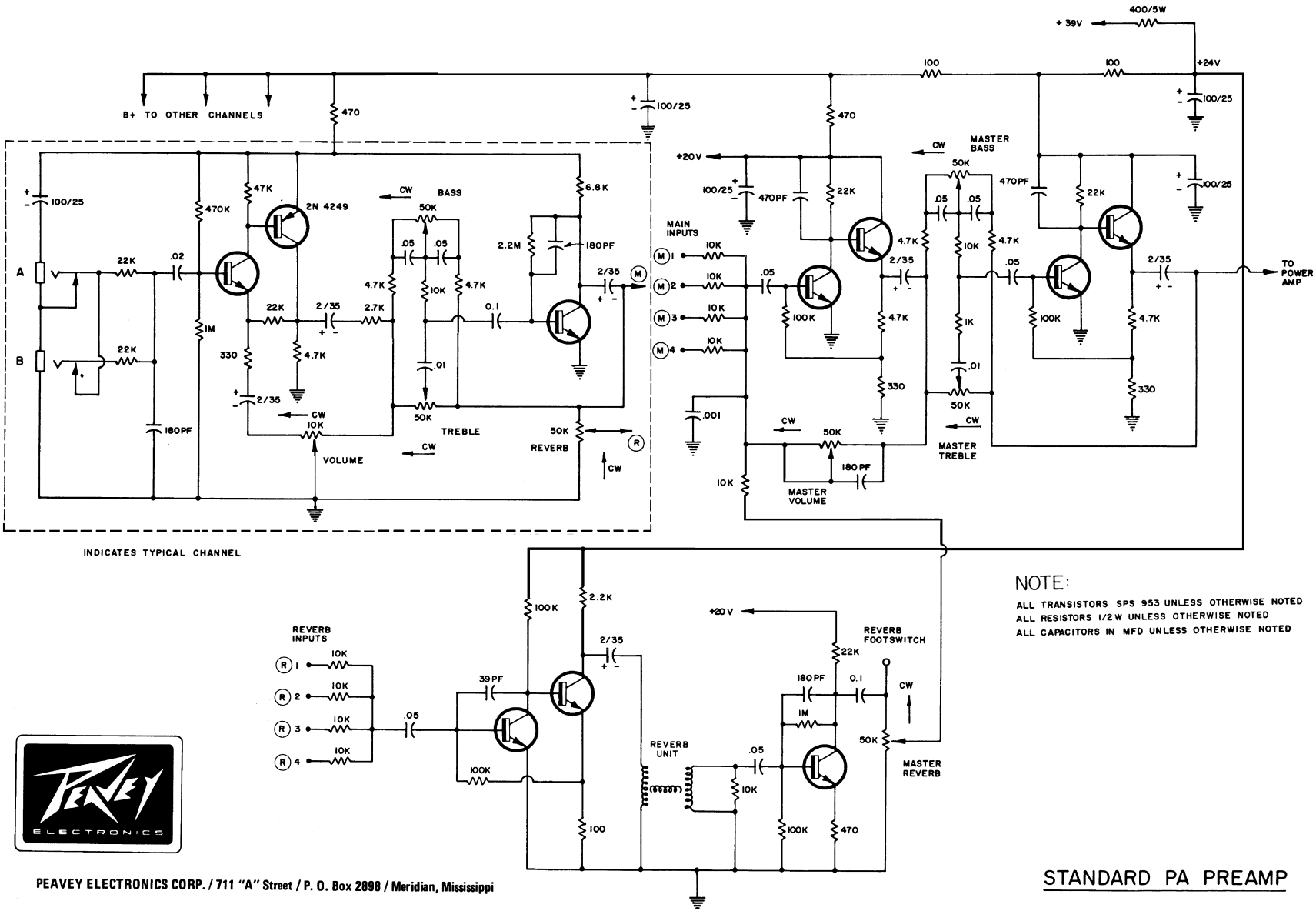

NOTE:

ALL TRANSISTORS SPS 953 UNLESS OTHERWISE NOTED
ALL RESISTORS 1/2W UNLESS OTHERWISE NOTED
ALL CAPACITORS IN MFD UNLESS OTHERWISE NOTED

PEAVEY ELECTRONICS CORP. / 711 "A" Street / P. O. Box 2898 / Meridian, Mississippi

STANDARD PA PREAMP

VAN HALEN 120 PREAMP **(DIAGRAM 1)**

Peavey

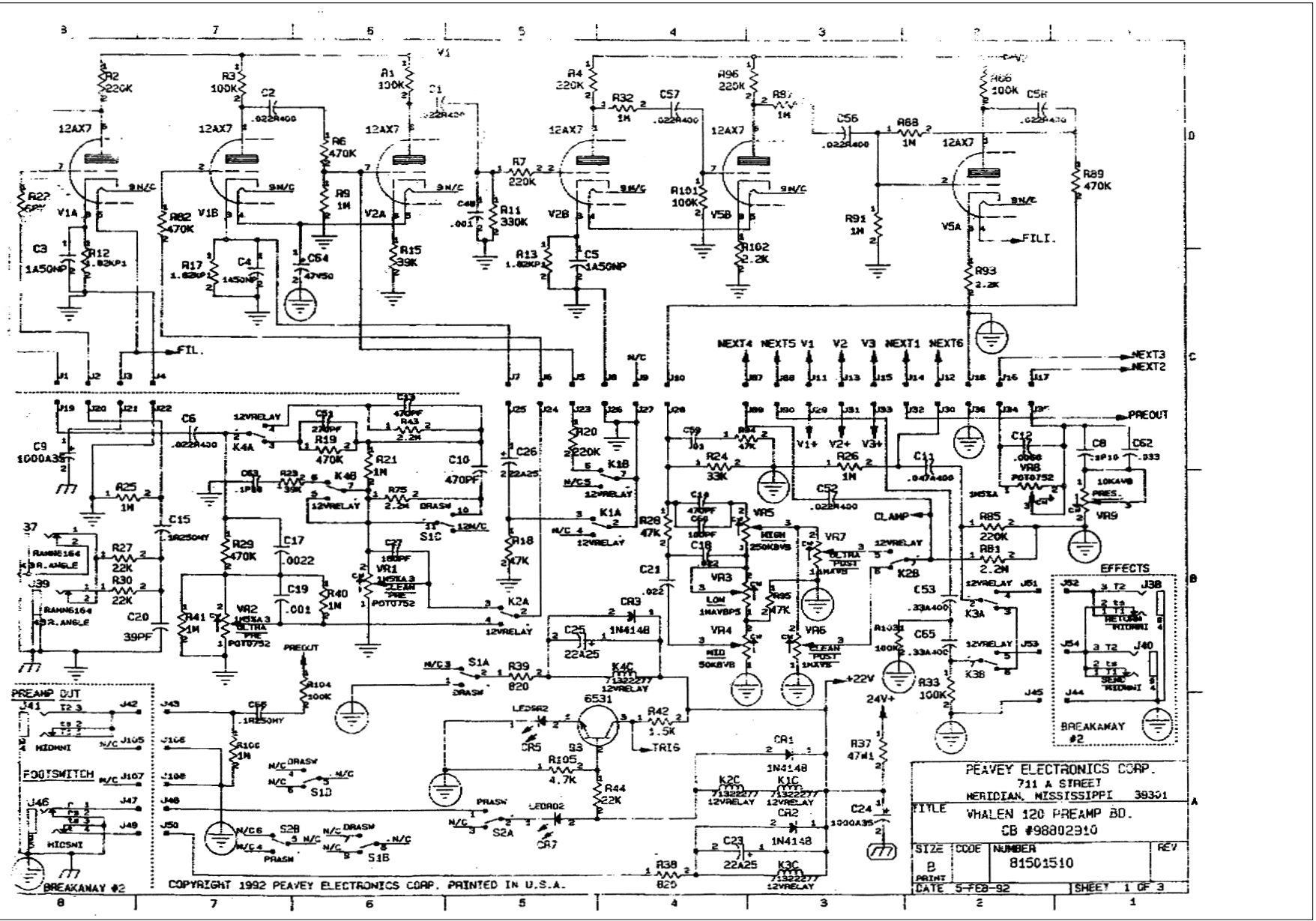

VAN HALEN 120 PREAMP **(DIAGRAM 2)**

Peavey

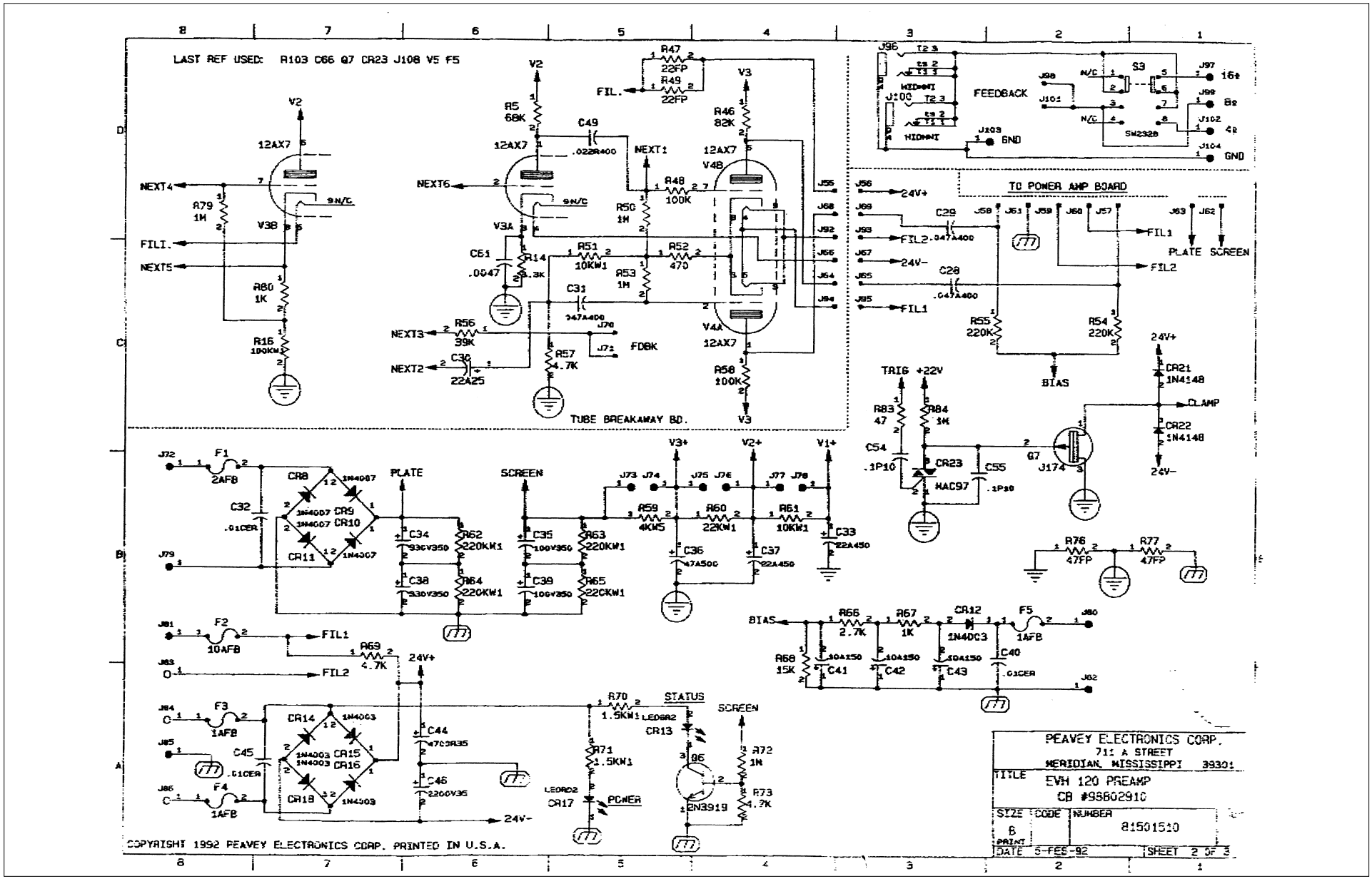

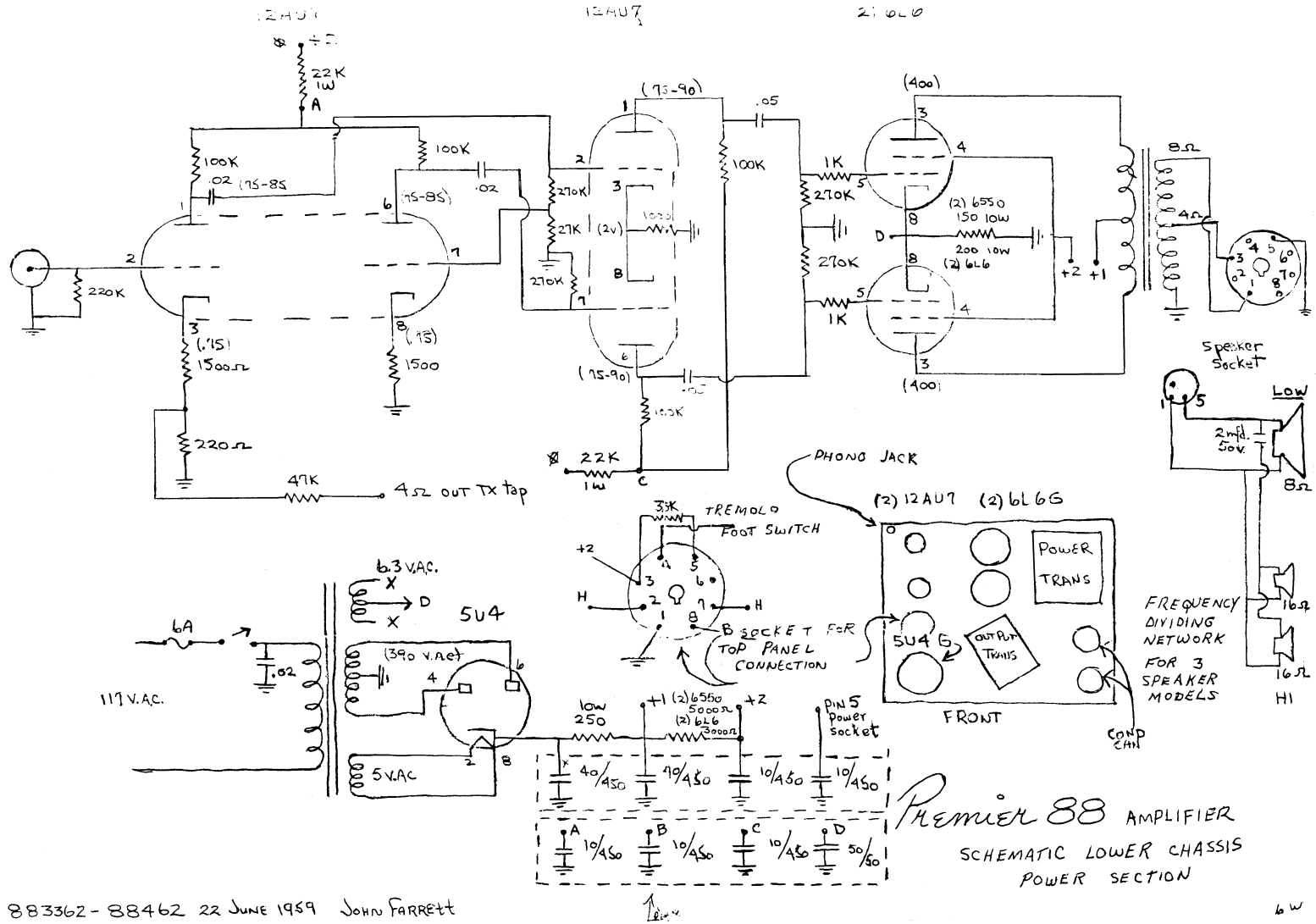
12AU7
12AU7
2) 6L6
22K 1W
A
100K
.02 (75-85)
100K
.02
(75-85)
220K
(.15) 1500Ω
(.15) 1500
220Ω
47K
4Ω OUT TX tap
(75-90)
.05
100K
270K
27K
(2v)
270K
(75-90)
100K
22K 1W
C
1K
270K
270K
1K
(400)
(400)
(2) 6550
150 10W
200 10W
(2) 6L6
+2
+1
8Ω
4Ω
Speaker Socket
Low
2mfd. 50v.
8Ω
PHONO JACK
(2) 12AU7 (2) 6L6
3K
TREMOLO FOOT SWITCH
B SOCKET FOR TOP PANEL CONNECTION
POWER TRANS
5U4 G
OUTPUT TRANS
FREQUENCY DIVIDING NETWORK FOR 3 SPEAKER MODELS
16Ω
16Ω
HI
FRONT
COND CHN
6.3 V.A.C.
5U4
6A
117 V.A.C.
.02
(390 V.A.C.)
5 V.AC
low 250
+1 (2) 6550 5000Ω
(2) 6L6 3000Ω
+2
PIN 5 power socket
40/450
20/450
10/450
10/450
10/450
10/450
10/450
50/50
Premier 88 AMPLIFIER
SCHEMATIC LOWER CHASSIS
POWER SECTION
883362 - 88462 22 JUNE 1959 JOHN FARRETT
6W

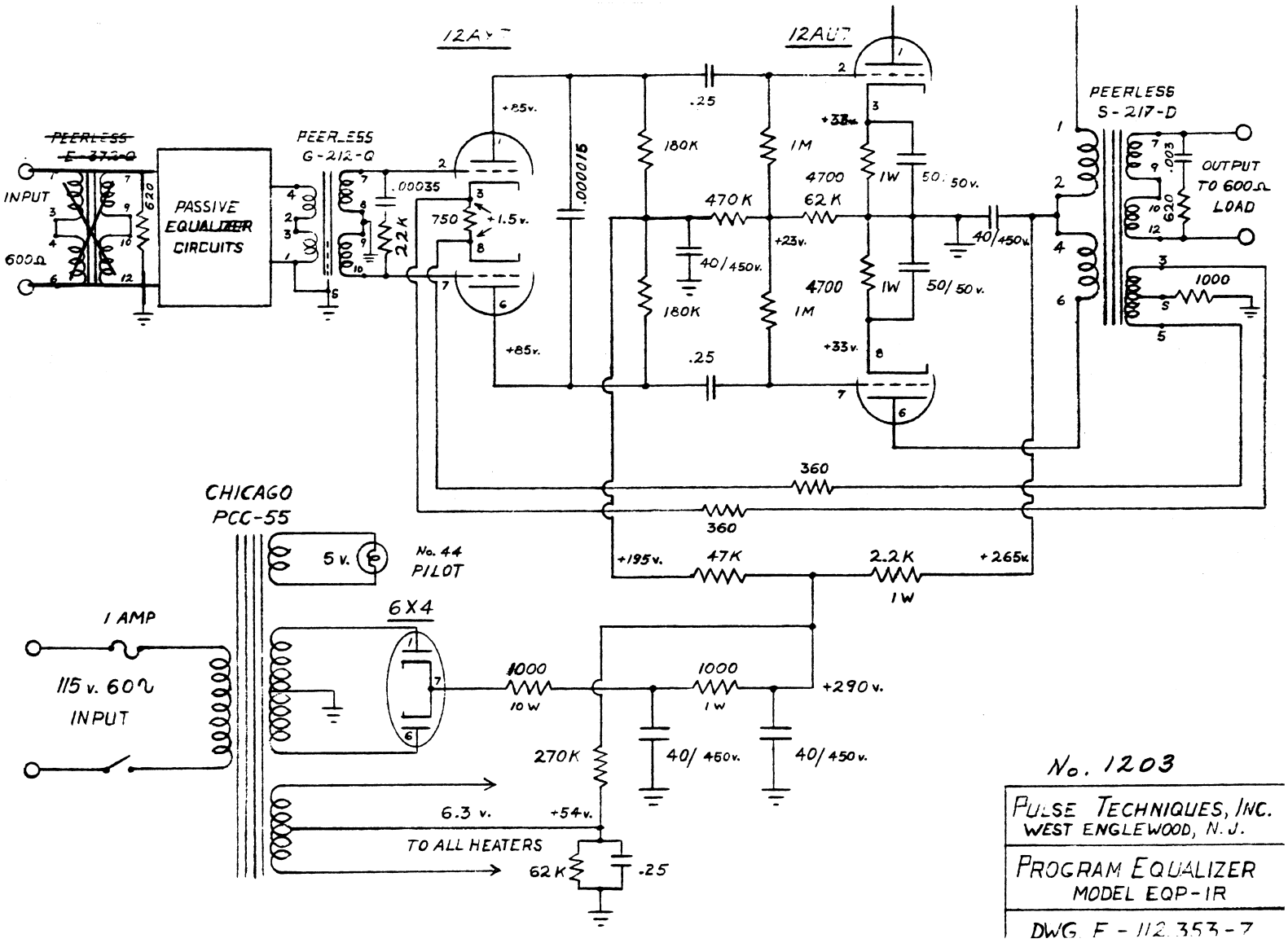
12AX7
12AU7
PEERLESS
E-372-Q
INPUT
600Ω
620
PASSIVE
EQUALIZER
CIRCUITS
PEERLESS
G-212-Q
.00035
750
+1.5v.
22K
+85v.
.000015
180K
1M
.25
470K
4700
62K
+23v.
40/450v.
1W
50/50v.
+33v.
PEERLESS
S-217-D
.003
OUTPUT
TO 600Ω
LOAD
1000
360
CHICAGO
PCC-55
5 v.
No. 44
PILOT
+195v.
47K
2.2K
1W
+265v.
1 AMP
115 v. 60~
INPUT
6X4
10W
+290v.
270K
6.3 v.
+54v.
TO ALL HEATERS
62K
No. 1203
PULSE TECHNIQUES, INC.
WEST ENGLEWOOD, N.J.
PROGRAM EQUALIZER
MODEL EQP-IR
DWG. F-112.353-7

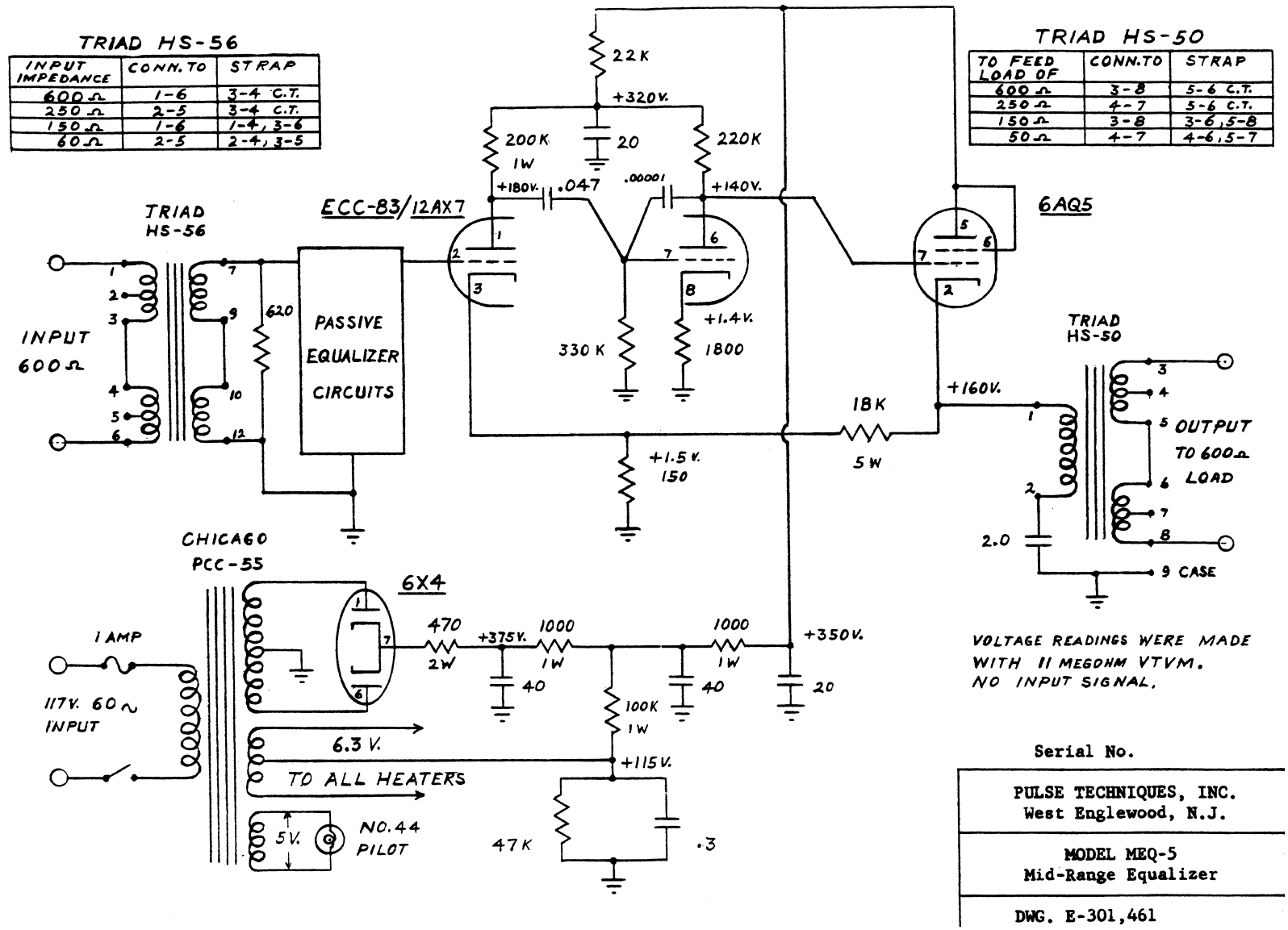
TRIAD HS-56
INPUT IMPEDANCE | CONN. TO | STRAP
600Ω | 1-6 | 3-4 C.T.
250Ω | 2-5 | 3-4 C.T.
150Ω | 1-6 | 1-4, 3-6
60Ω | 2-5 | 2-4, 3-5
TRIAD HS-50
TO FEED LOAD OF | CONN. TO | STRAP
600Ω | 3-8 | 5-6 C.T.
250Ω | 4-7 | 5-6 C.T.
150Ω | 3-8 | 3-6, 5-8
50Ω | 4-7 | 4-6, 5-7
22K
+320V.
200K 1W
20
220K
+180V.
.047
.00001
+140V.
ECC-83/12AX7
6AQ5
TRIAD HS-56
INPUT 600Ω
620
PASSIVE EQUALIZER CIRCUITS
330 K
+1.4V.
1800
TRIAD HS-50
+160V.
18K
5W
+1.5V.
150
OUTPUT TO 600Ω LOAD
2.0
9 CASE
CHICAGO PCC-55
6X4
1 AMP
117V. 60~ INPUT
470
2W
+375V.
1000
1W
40
100K
1W
1000
1W
40
+350V.
20
6.3 V.
TO ALL HEATERS
+115V.
5V.
NO.44 PILOT
47K
.3
VOLTAGE READINGS WERE MADE WITH 11 MEGOHM VTVM. NO INPUT SIGNAL.
Serial No.
PULSE TECHNIQUES, INC.
West Englewood, N.J.
MODEL MEQ-5
Mid-Range Equalizer
DWG. E-301,461

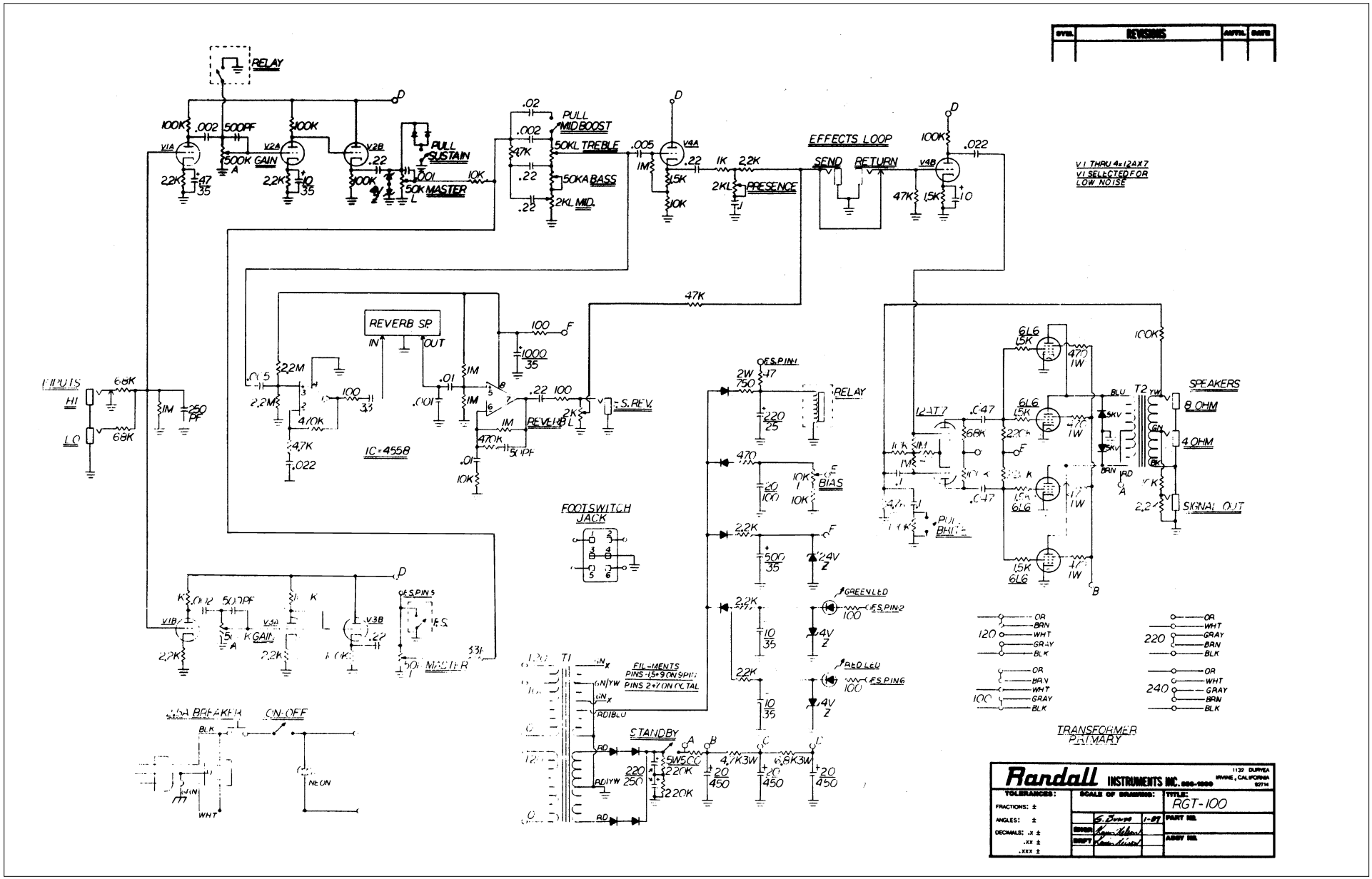
REVISIONS
RELAY
PULL MID BOOST
50KL TREBLE
50KA BASS
2KL MID.
PULL SUSTAIN
50K MASTER
GAIN
EFFECTS LOOP
SEND
RETURN
PRESENCE
V1 THRU 4=12AX7
V1 SELECTED FOR LOW NOISE
REVERB SP.
IN
OUT
IC=4558
REVERB
S.REV
INPUTS
HI
LO
FOOTSWITCH JACK
BIAS
PULL BRIT.
SPEAKERS
8 OHM
4 OHM
SIGNAL OUT
GREEN LED
RED LED
FILAMENTS
PINS 1-5+9 ON 9PIN
PINS 2+7 ON OCTAL
STANDBY
MASTER
1.5A BREAKER
ON-OFF
NEON
TRANSFORMER PRIMARY
Randall INSTRUMENTS INC.
1132 DURYEA
IRVINE, CALIFORNIA
TOLERANCES:
FRACTIONS: ±
ANGLES: ±
DECIMALS: .X ±
.XX ±
.XXX ±
SCALE OF DRAWING:
TITLE:
RGT-100
PART NO.
ASSY NO.

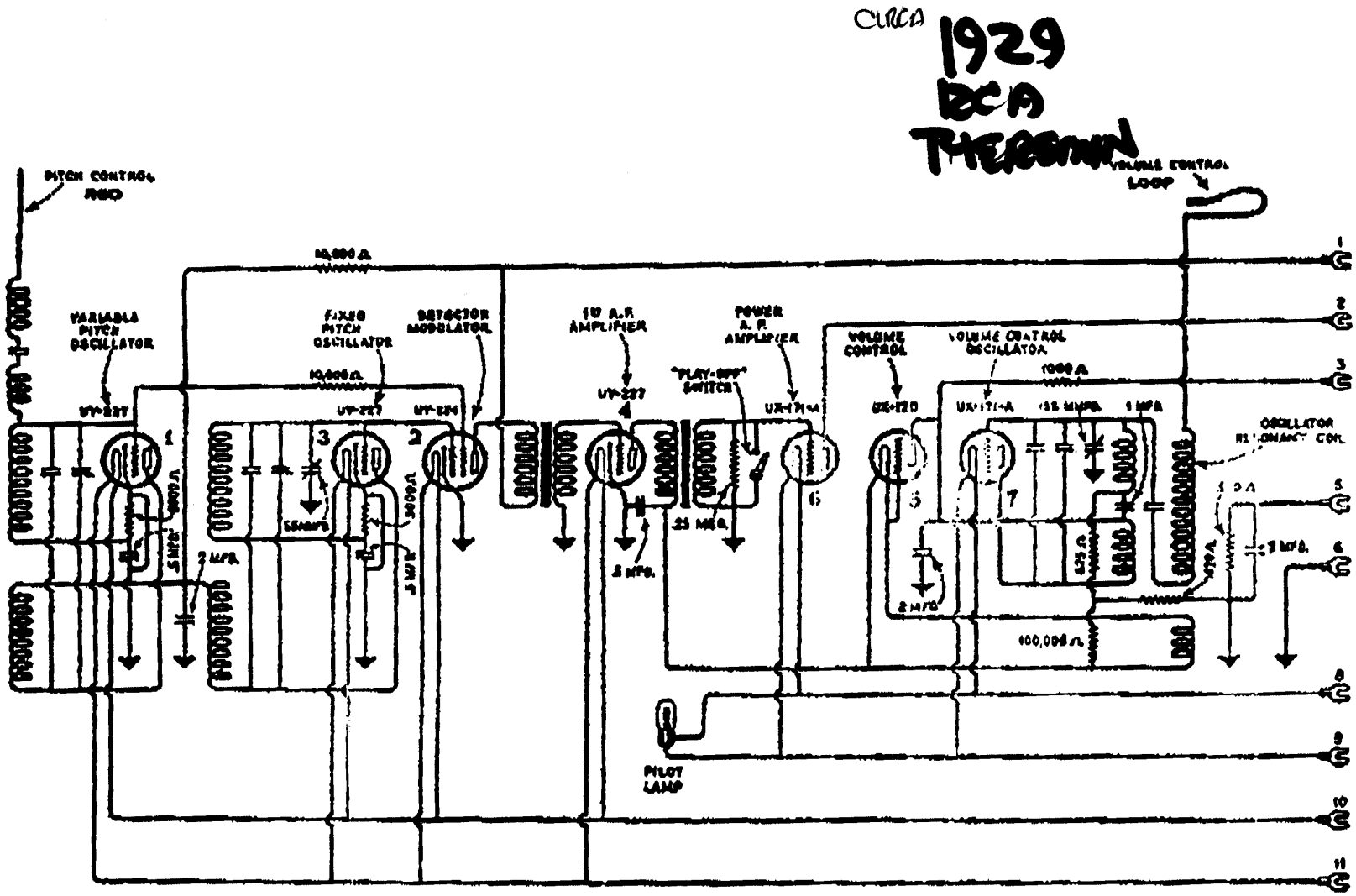

Figure 4—Schematic circuit diagram of the main assembly

Revox Stereo Tape Recorder

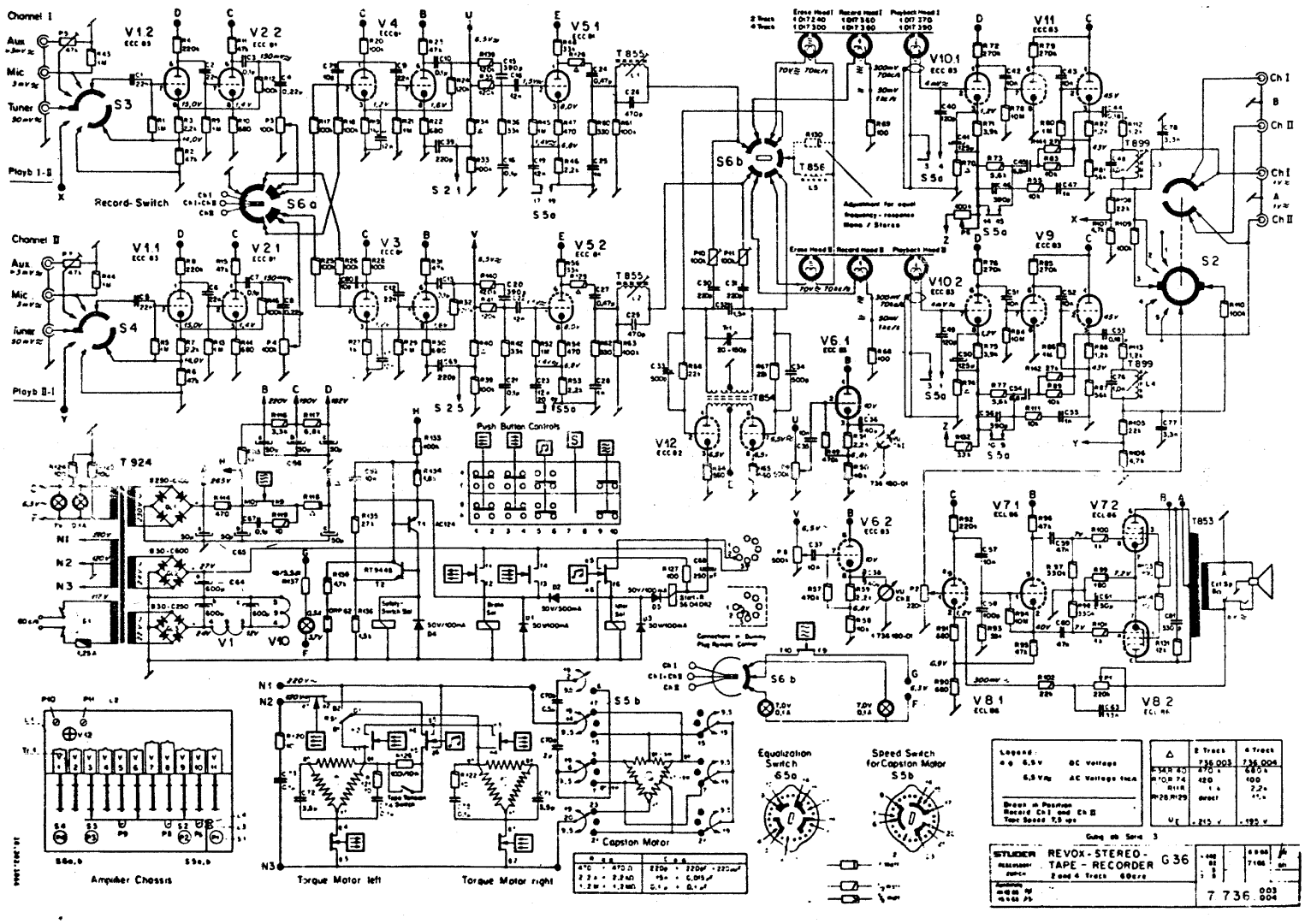

Courtesy of A. L. Henrichsen.

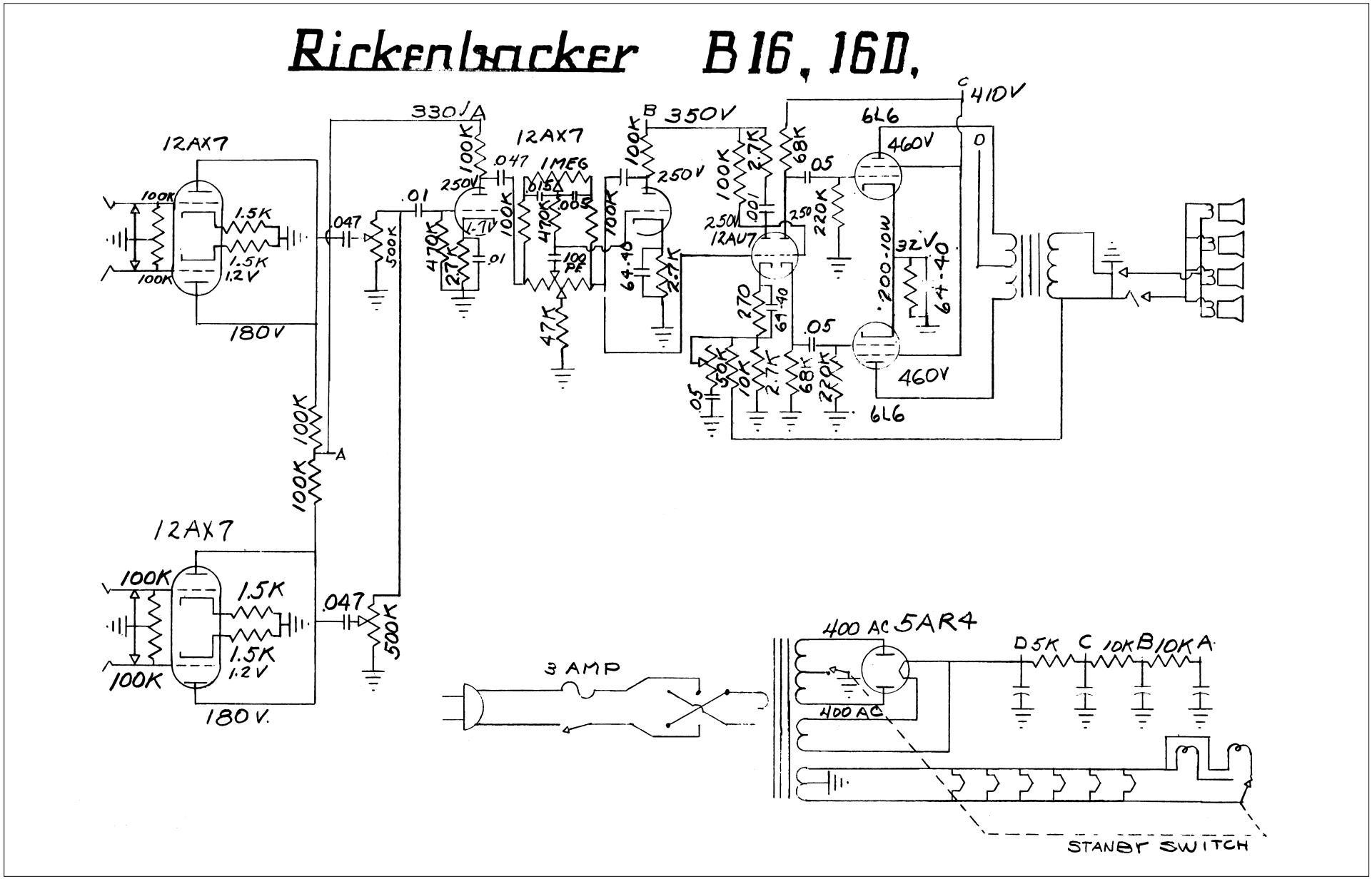
Rickenbacker B16, 16D.
12AX7
100K
1.5K
1.5K
1.2V
100K
180V
.047
500K
.01
330V
100K
250V
.047
1MEG
12AX7
.015
.005
470K
100K
1.7V
470K
27K
.01
100 PF
47K
B 350V
100K
250V
700K
64-40
2.7K
100K
2.7K
68K
.05
6L6
460V
C 410V
D
250V
12AU7
.001
250
220K
32V
.200-10W
64-40
270
64-40
.05
50K
10K
2.7K
68K
220K
.05
460V
6L6
100K
A
100K
12AX7
100K
1.5K
1.5K
1.2V
100K
180V.
.047
500K
3 AMP
400 AC
5AR4
400 AC
D 5K
C 10K
B 10K
A
STANBY SWITCH

B SERIES GUITAR

Rickenbacker

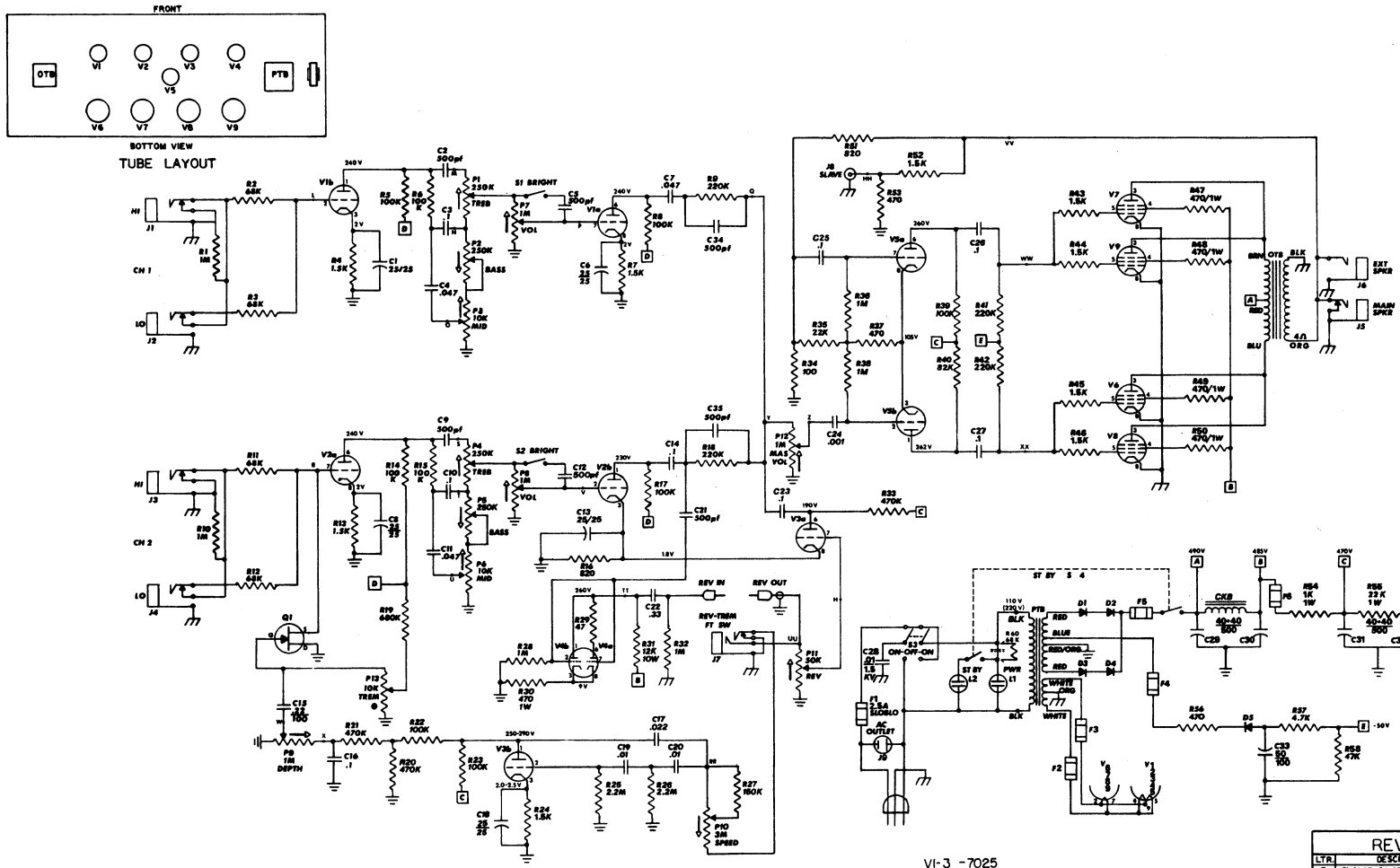

1. ALL RESISTORS 1/2W - 10% EXCEPT AS NOTED.
2. ALL CAPACITORS ARE 400V. EXCEPT AS NOTED, VALUES IN MFD.
3. 220V., R60 AND F2-6 USED ON C.E.E. VERSIONS ONLY.
   J9 IS OMITTED ON C.E.E. VERSION.
4. ALL VOLTAGES MEASURED TO GROUND WITH VTVM ±10%, NO INPUT.
5. P13 IS ADJUSTED FOR OPTIMUM TREMOLO.
6. POINTS C,D,E,L...XX INDICATE WIRES LEAVING P.C. BOARDS.
7. ARROW (⟵) INDICATES C.W. ROTATION

V1-3 - 7025
V4 - 12AU7A / ECC82
V5 - 12AT7 / ECC81
V6-9 - 6L6GC
D1-4 - 1N4007
D5 - 1N4001
Q1 - 2N5461

REVISIONS

LTR.	DESCRIPTION	DATE
B	CHANGE C2, C9, R55. ADD C34, C35.	
	CHANGE VOLTAGES.	6-20-74
C	CHANGE C4, C11, P3, P6, R58. ADD R60	9-20-74

Rickenbacker

SCALE — APPROVED BY — DRAWN BY
DATE JAN 15, '74 — REVISED

B SERIES GUITAR AMP

201 E. STEVENS, SANTA ANA, CA 92707 — B2S

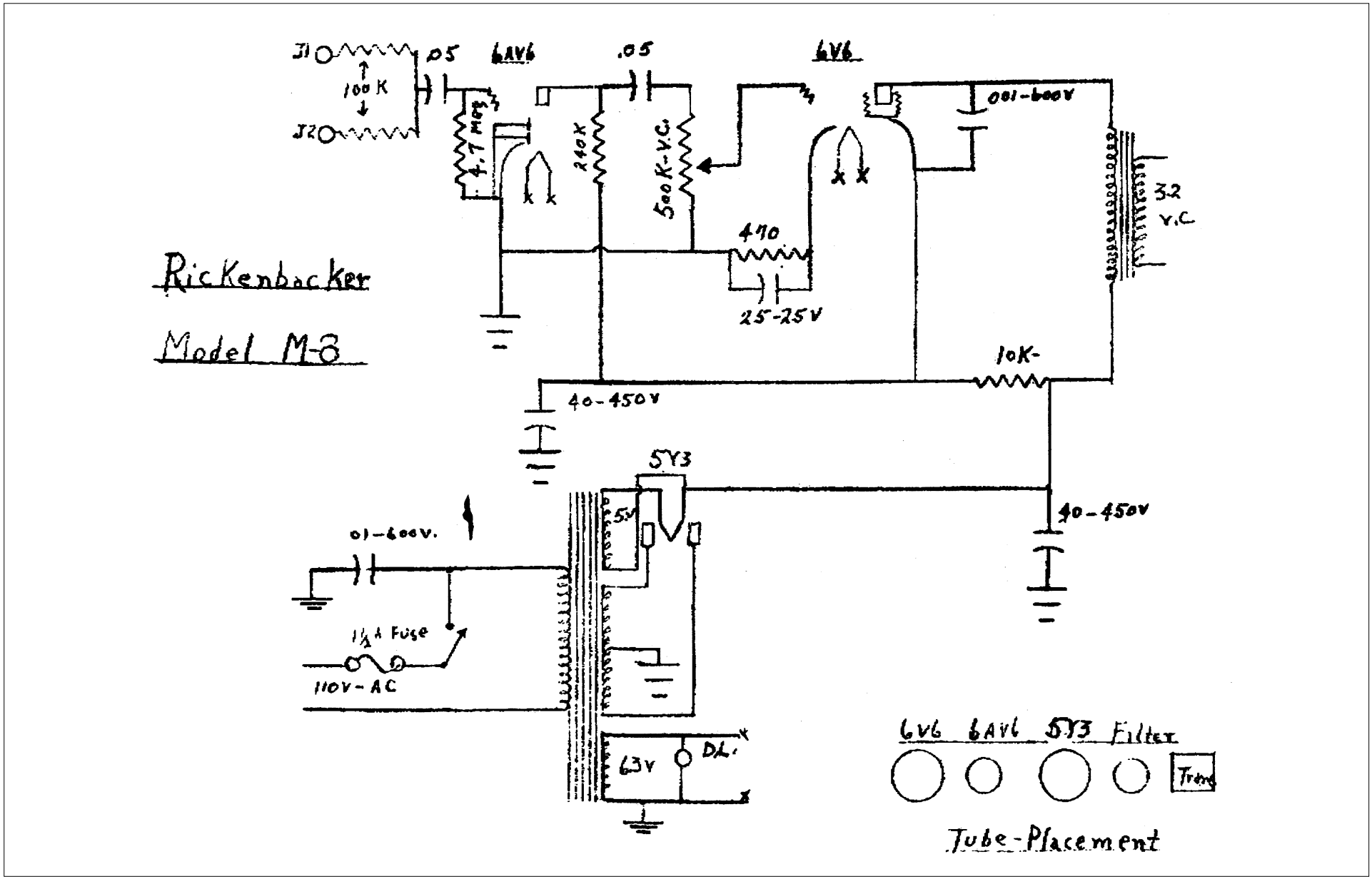
J1
100 K
J2
.05
6AV6
4.7 Meg
.05
240 K
500 K-V.C.
6V6
.001-600V
3.2 V.C
470
25-25V
Rickenbacker
Model M-8
10K-
40-450V
5Y3
5V
40-450V
01-600V.
1½A Fuse
110V-AC
63V
DL.
6V6 6AV6 5Y3 Filter
Trans
Tube-Placement

FEB.10,1980

BOLT-30

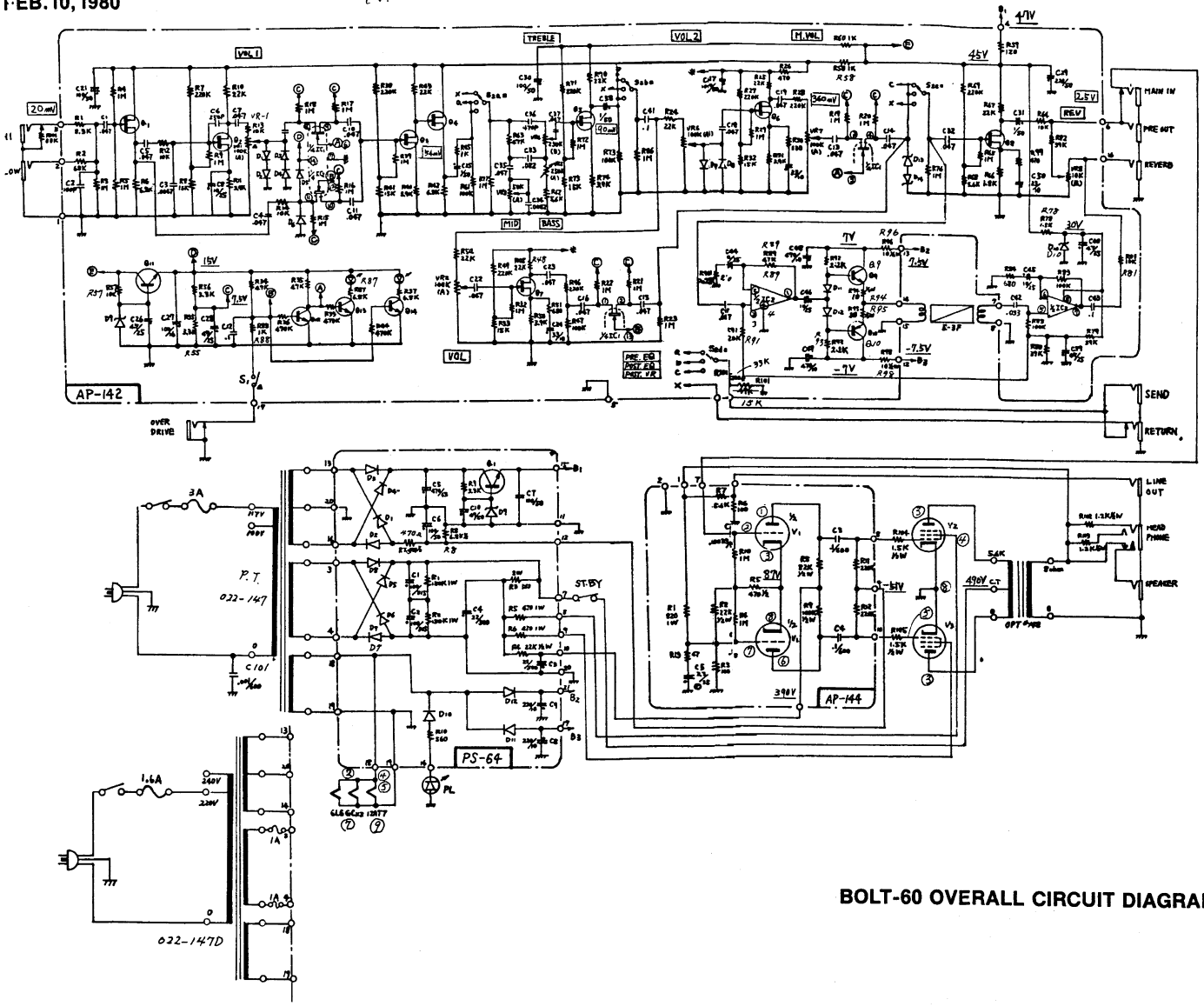

BOLT-60 OVERALL CIRCUIT DIAGRAM

AP-142

Q1-Q8	:	2SK223-F or-G
Q9, Q11	:	2SC1382-Y
Q10	:	2SA682-Y
Q12-Q14	:	2SC945-GR
IC1	:	TC-4016
IC2	:	μPC-4558C
D1-D4	:	1S188FM
D5-D8	:	1S2473
D9	:	RD-15EB
D10	:	RD-30EB4
D11-D12	:	1S2473
D13-D14	:	RD-6.8EB

AP-144

V1	:	12AT7
V2-V3	:	6L6GC

PS-64

Q1	:	2SC1624-Y
D1-D4	:	
D10-D12	:	1N4003
D5-D8	:	RA-1SF
D9	:	RD-47E

LEDs	:	SLP-135B
	:	Negative lead on electro ca

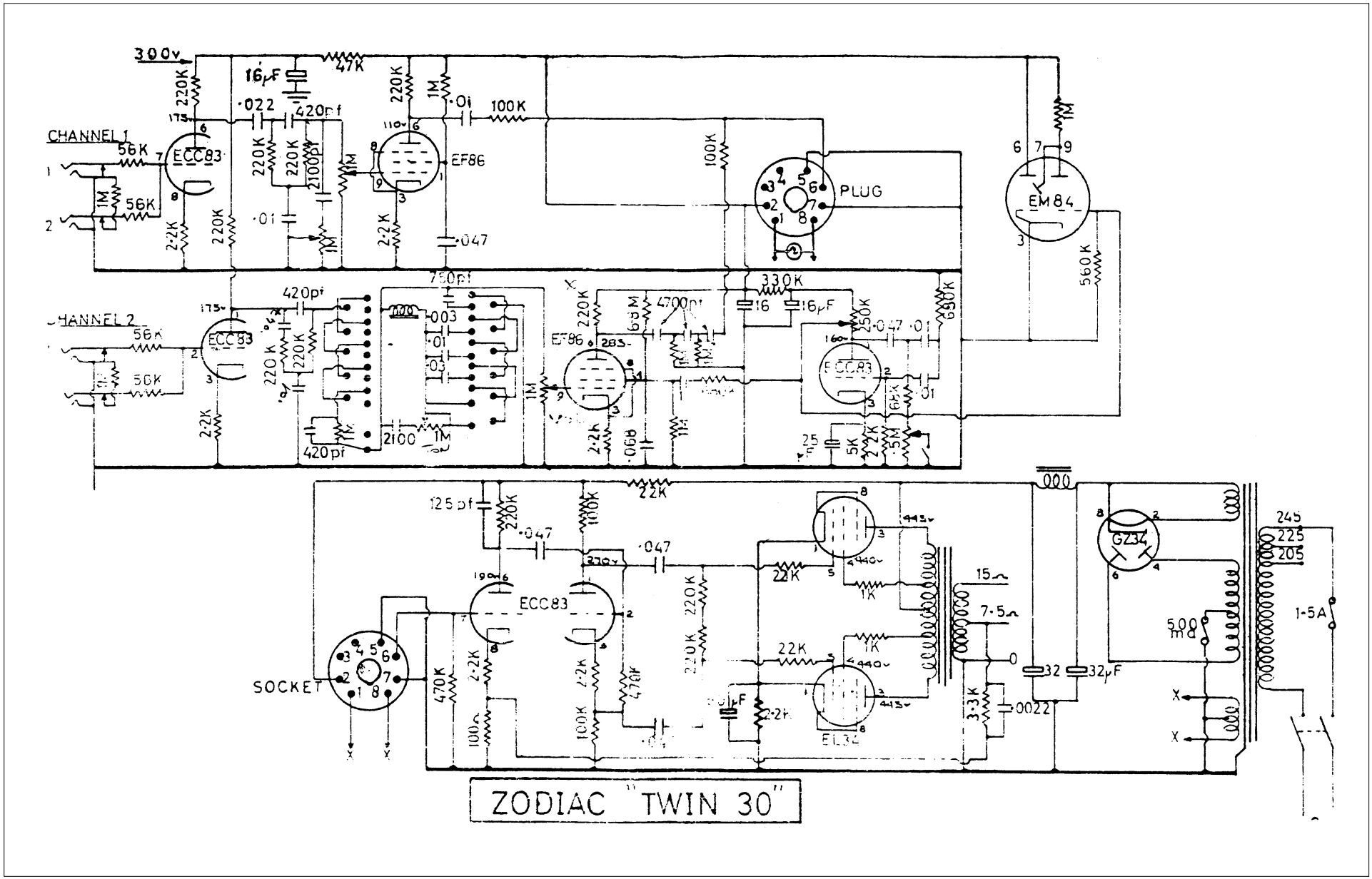
300v
CHANNEL 1
CHANNEL 2
ECC83
EF86
EM84
PLUG
GZ34
EL32
SOCKET
ZODIAC "TWIN 30"

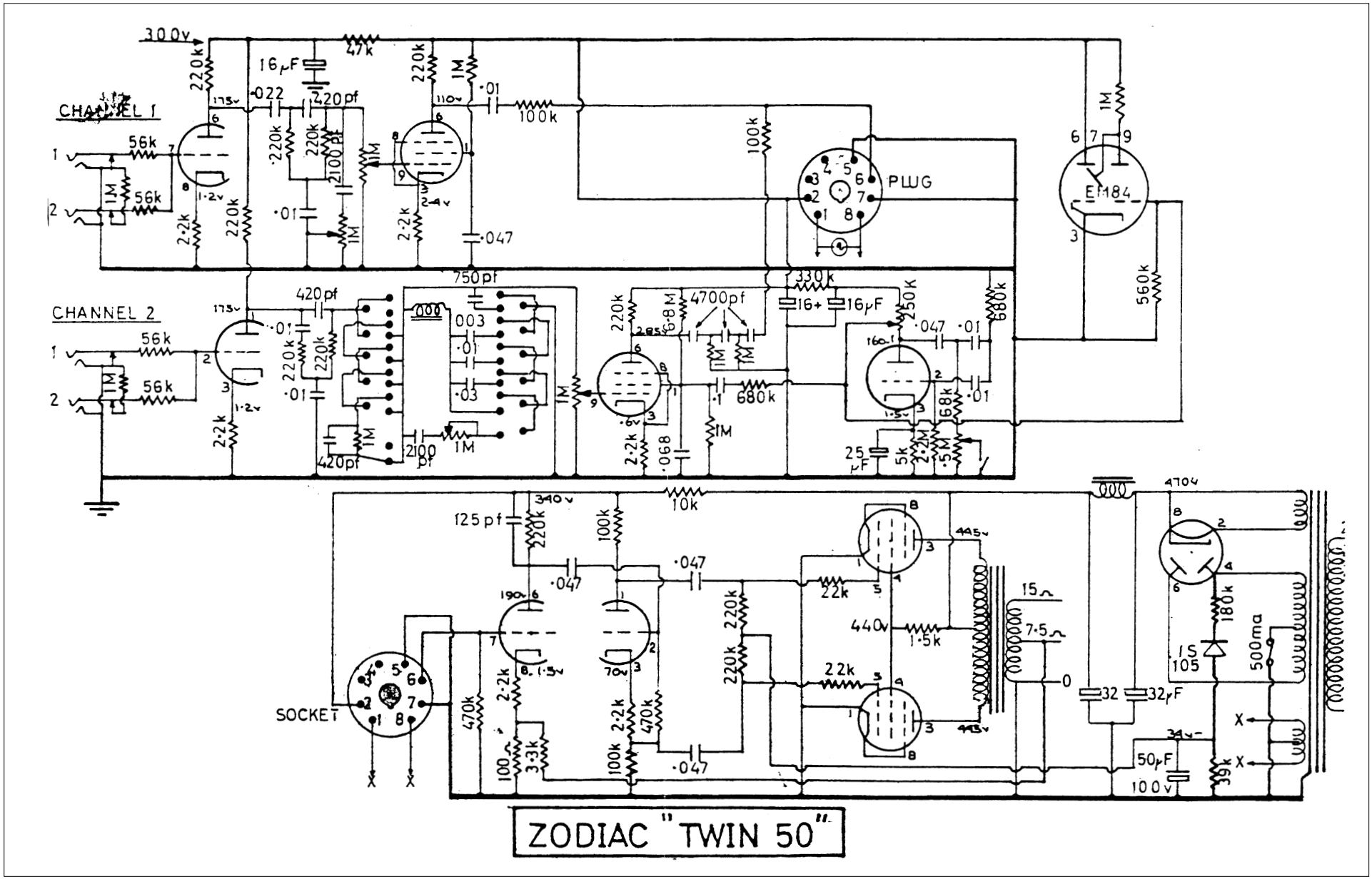
300v
CHANNEL 1
CHANNEL 2
PLUG
EF184
SOCKET
IS 105
500ma
ZODIAC "TWIN 50"

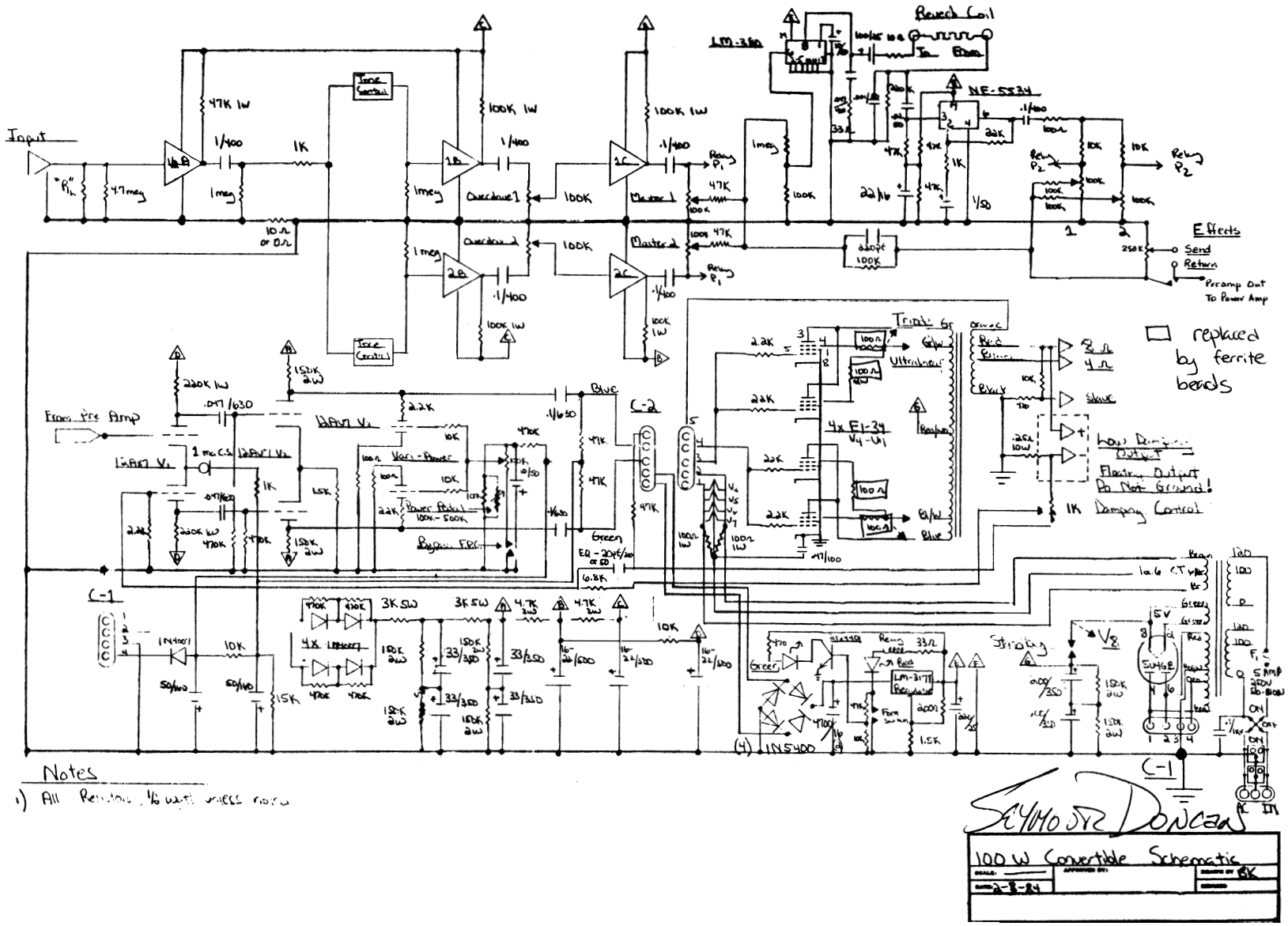
Input
Reverb Coil
LM-380
NE-5534
Effects
Send
Return
Preamp Out
To Power Amp
replaced by ferrite beads
Tone Control
Overdrive 1
Overdrive 2
Master 1
Master 2
Relay P1
Relay P2
From Pre Amp
Power Bias
Bias Adj
Tremolo
Ultrasonic
4x EL-34
V4-V1
Low Impedance Output
Speaker Output
Do Not Ground!
1K Damping Control
Blue
Green
Red
Black
C-1
C-2
(4) 1N5400
LM-317T Regulator
5U4GB
Notes
1) All Resistors 1/8 watt unless noted
Seymour Duncan
100 W Convertible Schematic
2-8-84
BK

2X6L6 TREMOLO AMP **(OLD)**

Silvertone

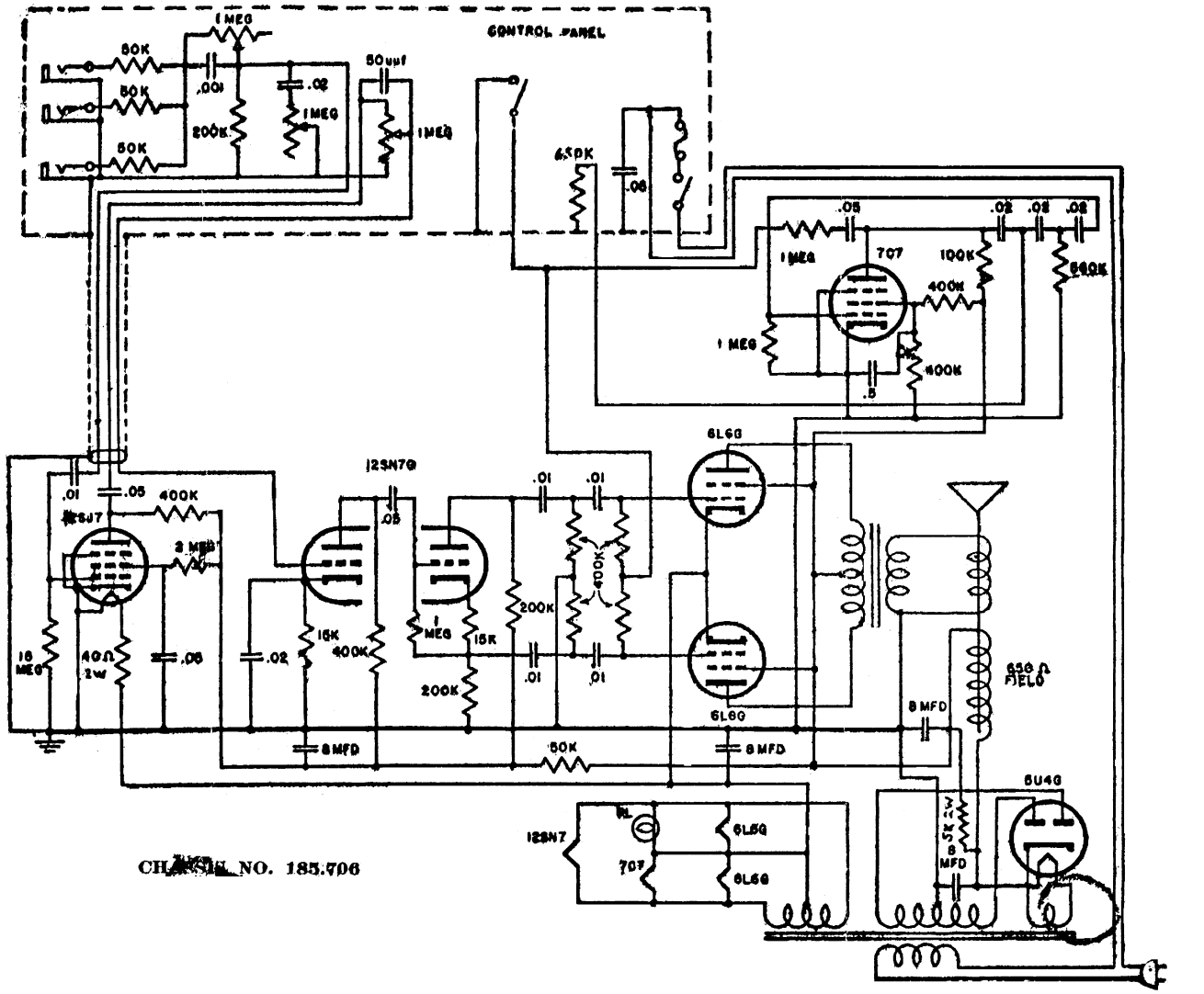

CHASSIS NO. 185.706

SEARS ROEBUCK AND COMPANY

2X6V6 AMP

Silvertone

NOTES:

1. VALUES OF CAPACITORS IN MFD.
2. ALL RESISTORS ARE ½ WATT UNLESS OTHERWISE NOTED.
3. VOLTAGES MEASURED FROM POINTS INDICATED TO CHASSIS WITH 20,000 OHM/VOLT METER.

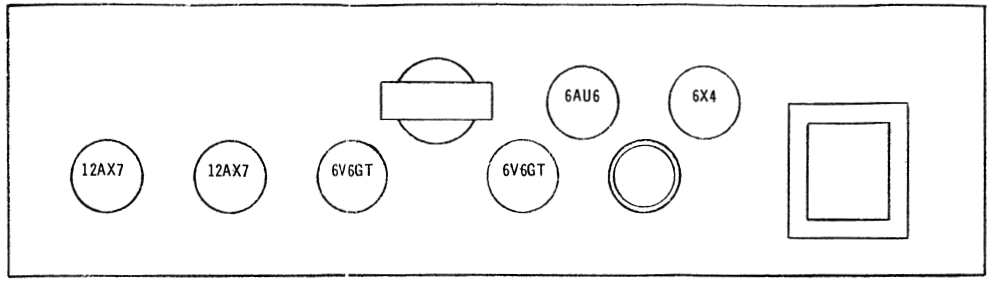

TUBE LAYOUT

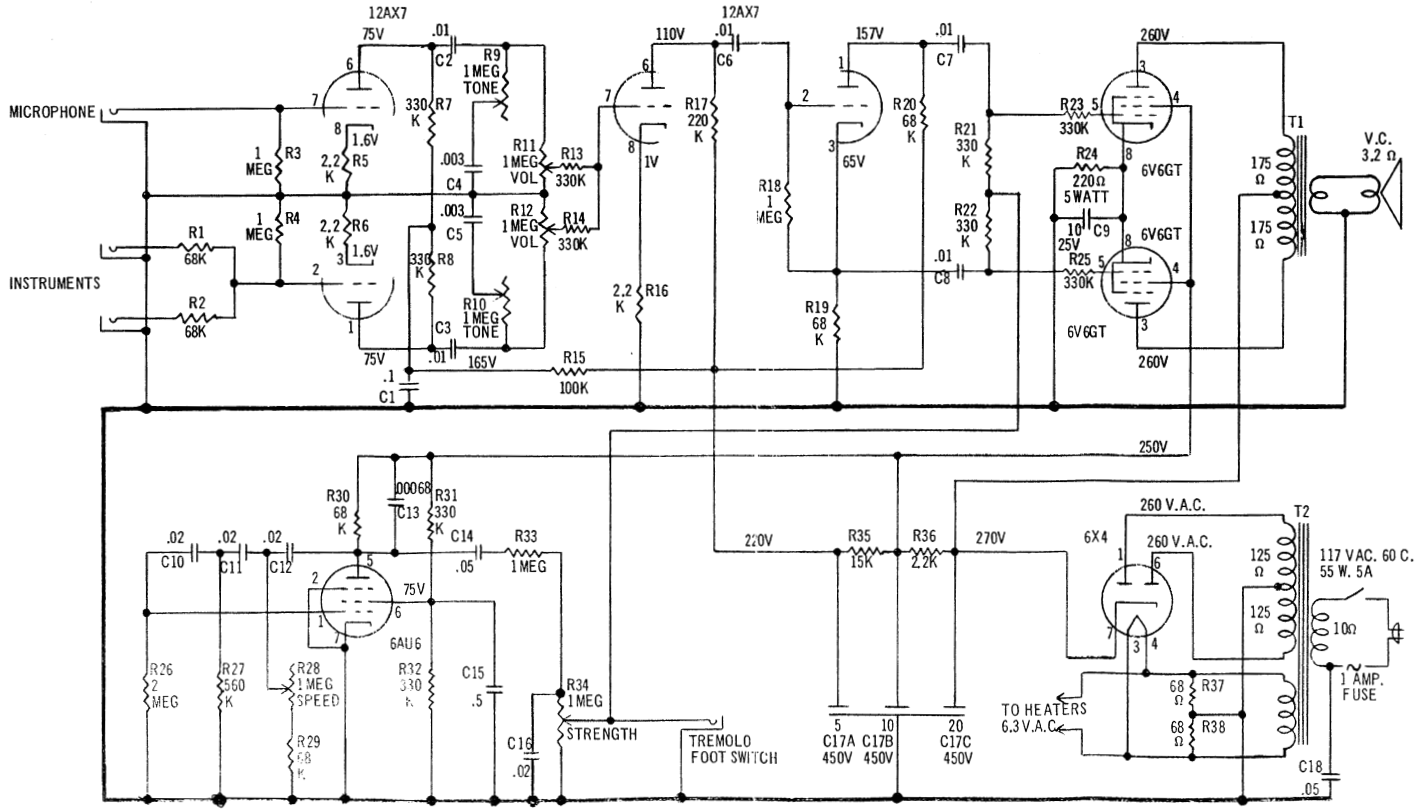

SCHEMATIC DIAGRAM OF SILVERTONE CHASSIS 185.10210

2X6V6 AMP **(REVISED)**

Silvertone

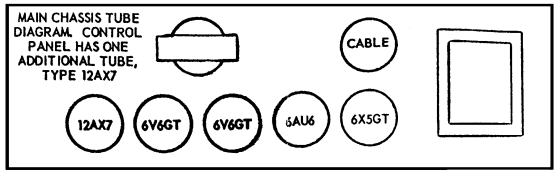

TUBE LAYOUT

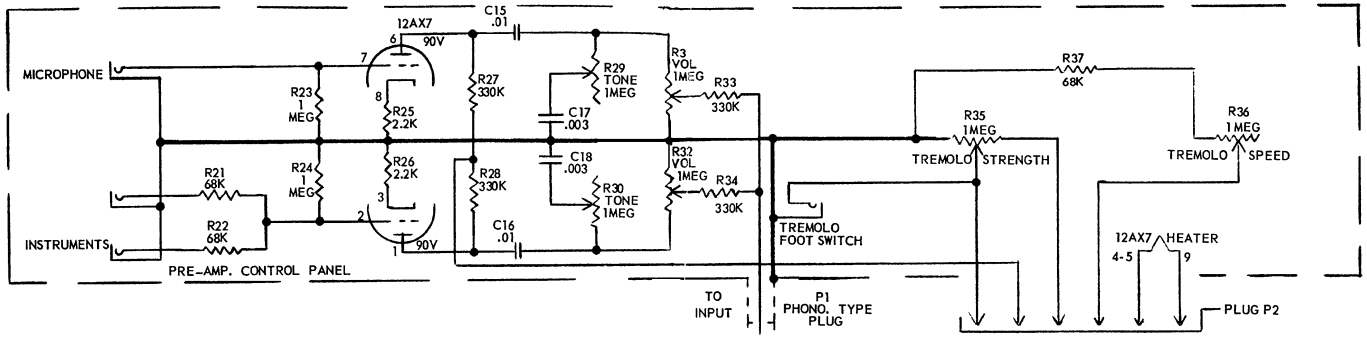

NOTES:

1. VALUES OF CAPACITORS IN MFD.
2. ALL RESISTORS ARE ½ WATT UNLESS OTHERWISE NOTED.
3. VOLTAGES MEASURED FROM POINTS INDICATED TO CHASSIS WITH 20,000 OHM/VOLT METER.

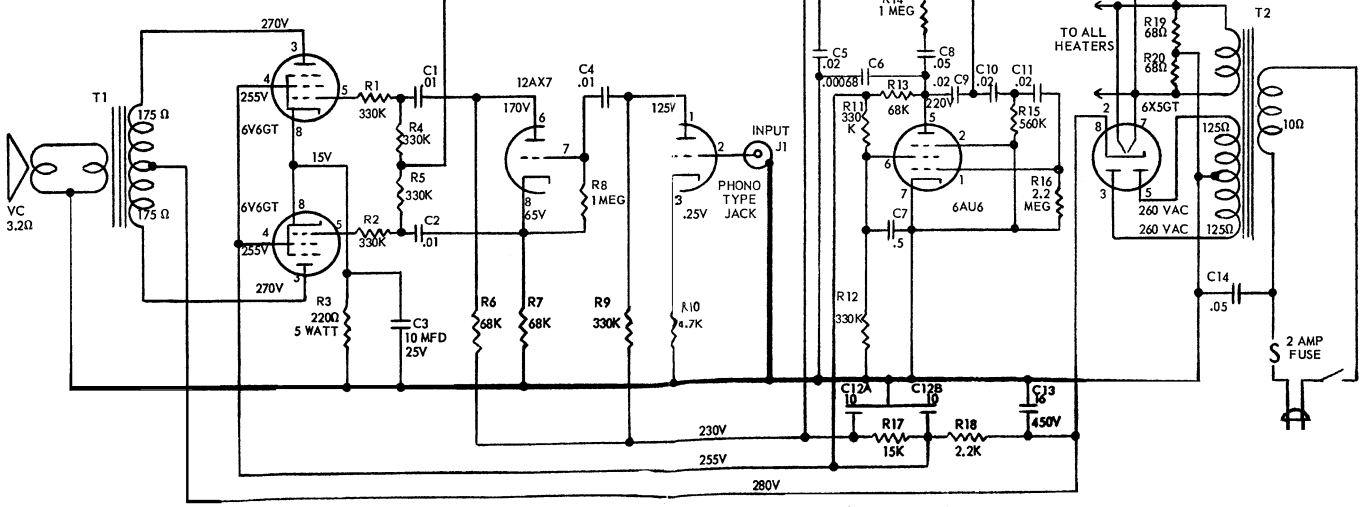

SCHEMATIC DIAGRAM OF SILVERTONE CHASSIS 185.10201

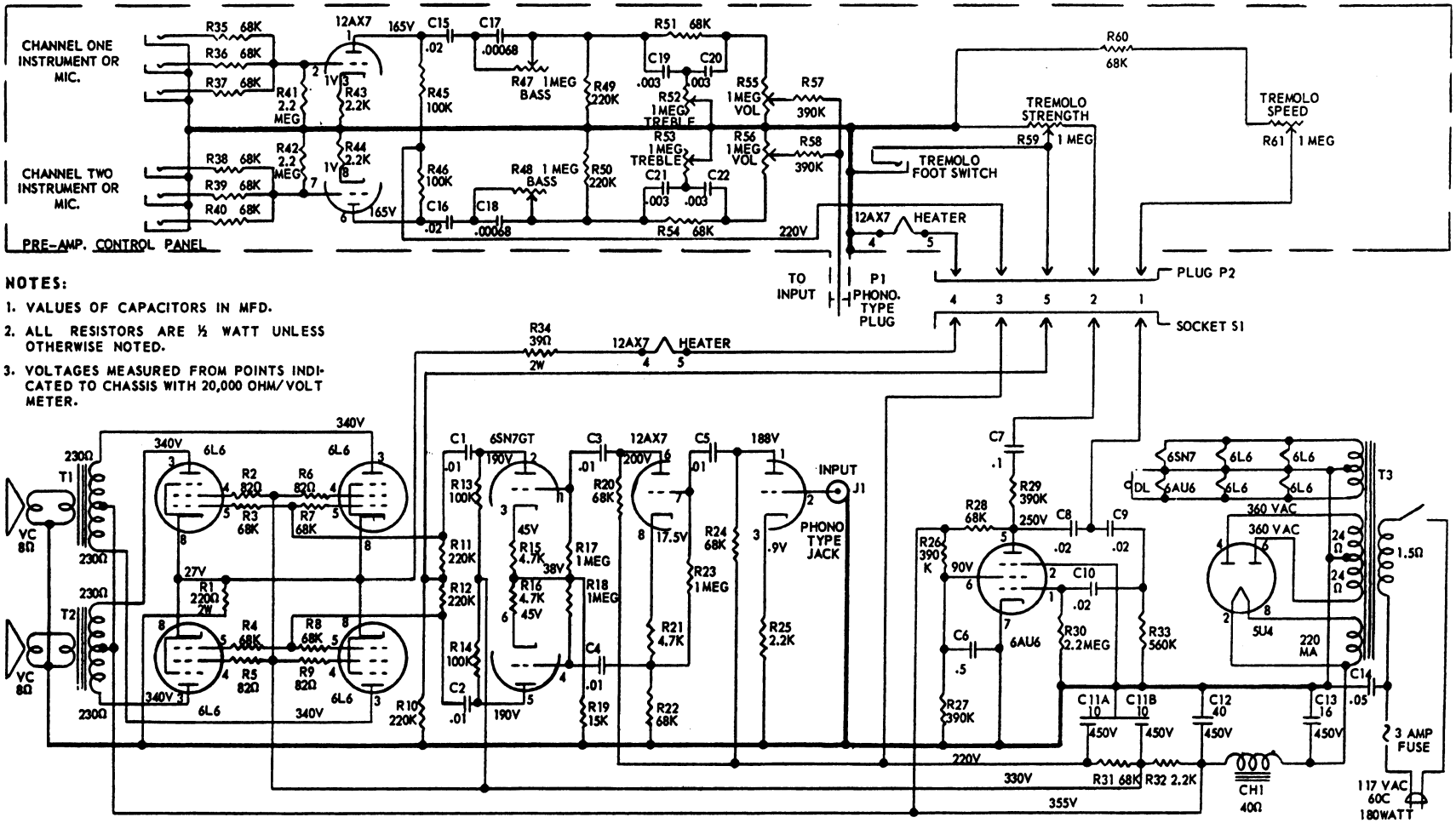

NOTES:

1. VALUES OF CAPACITORS IN MFD.
2. ALL RESISTORS ARE ½ WATT UNLESS OTHERWISE NOTED.
3. VOLTAGES MEASURED FROM POINTS INDICATED TO CHASSIS WITH 20,000 OHM/VOLT METER.

SILVERTONE MUSICAL INSTRUMENT AMPLIFIER MODEL 1396, Ch, 185.10500

SCHEMATIC DIAGRAM COURTESY SEARS, ROEBUCK & CO.

NOTES:

1. VALUES OF CAPACITORS IN MFD.
2. ALL RESISTORS ARE ½ WATT UNLESS OTHERWISE NOTED.
3. VOLTAGES MEASURED FROM POINTS INDICATED TO CHASSIS WITH 20,000 OHM/VOLT METER.

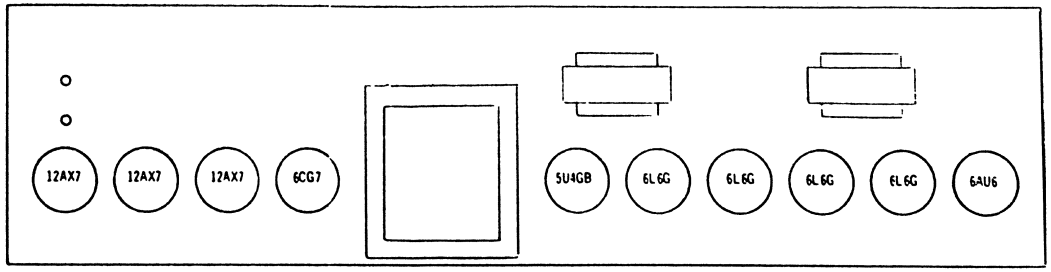

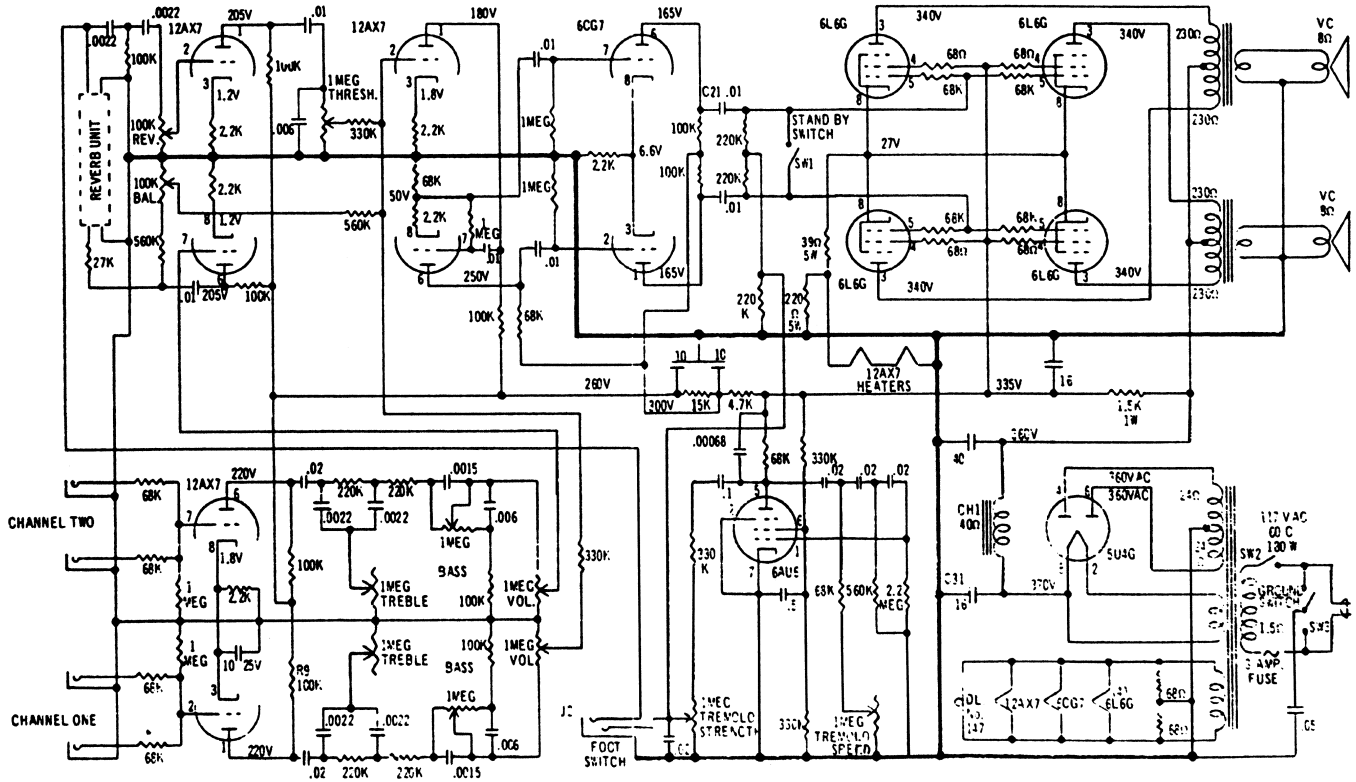

SILVERTONE MODEL 1474 (CH. 185.10410)

Schematic Diagram Courtesy of Sears. Ro

Silvertone Model 1482, page 1 of 2 1965

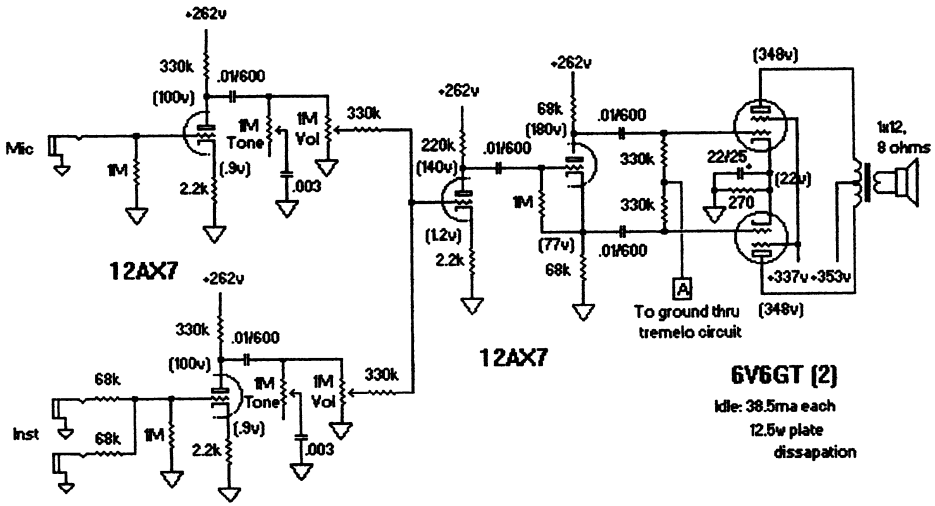

Silvertone Model 1482, page 2 of 2

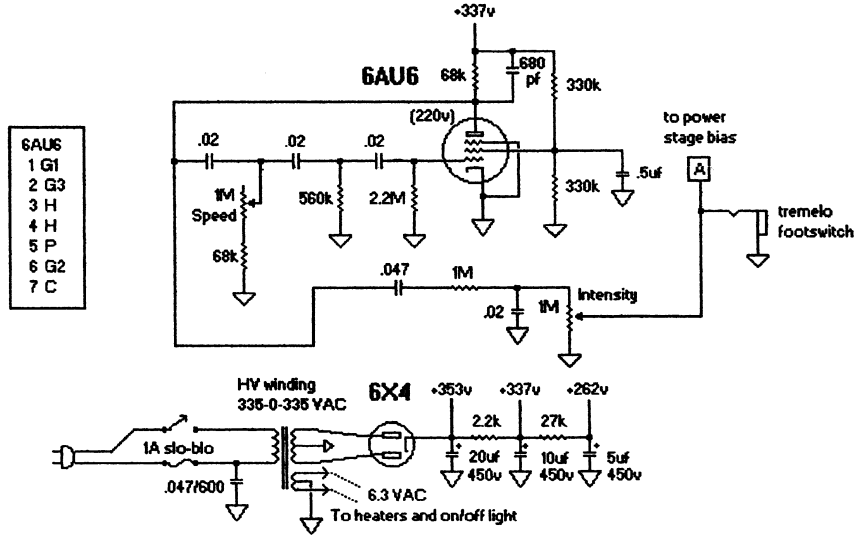

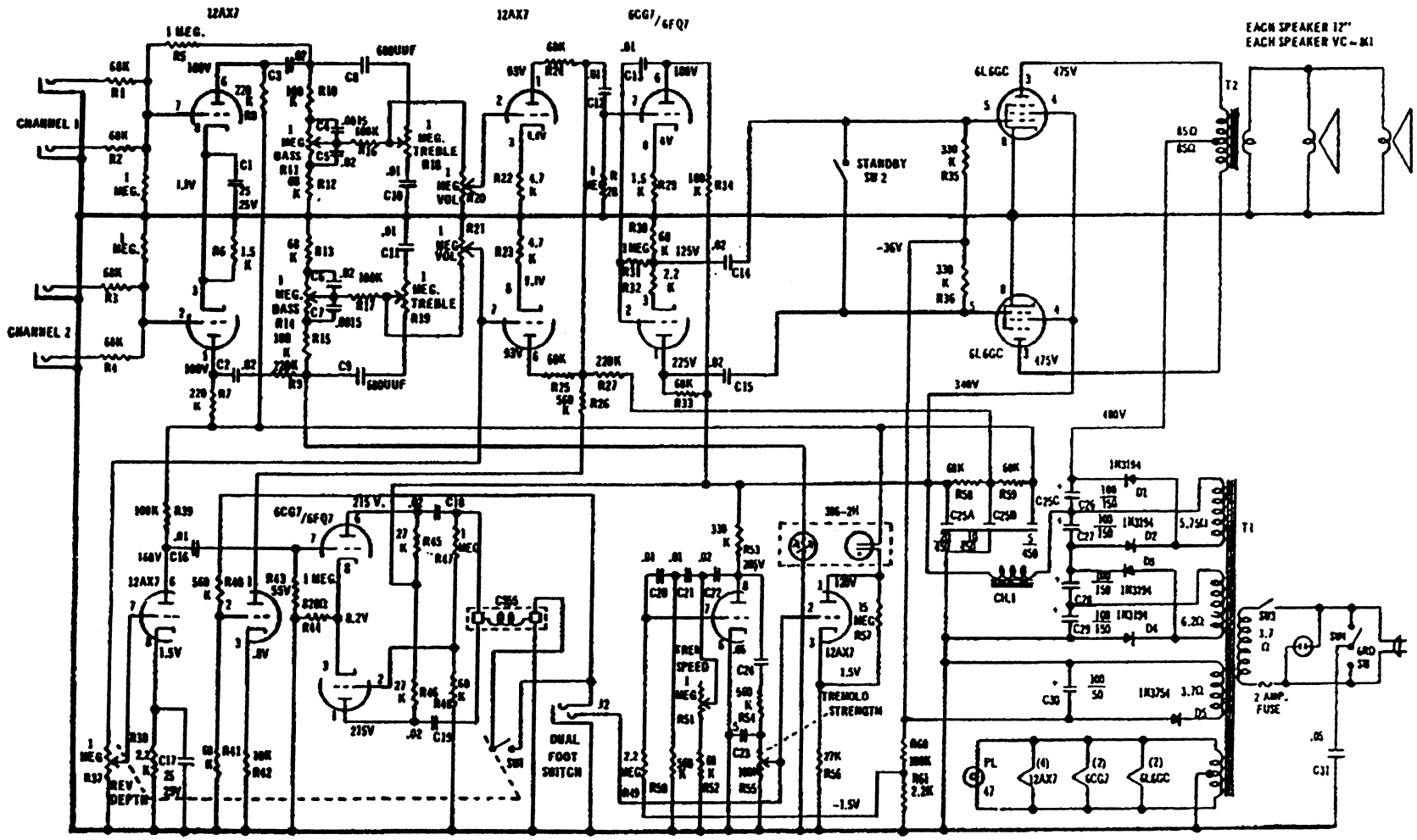

SCHEMATIC DIAGRAM OF SILVERTONE CHASSIS 185.11040

SILVERTONE MODEL
1484 (CH. 185.11040)

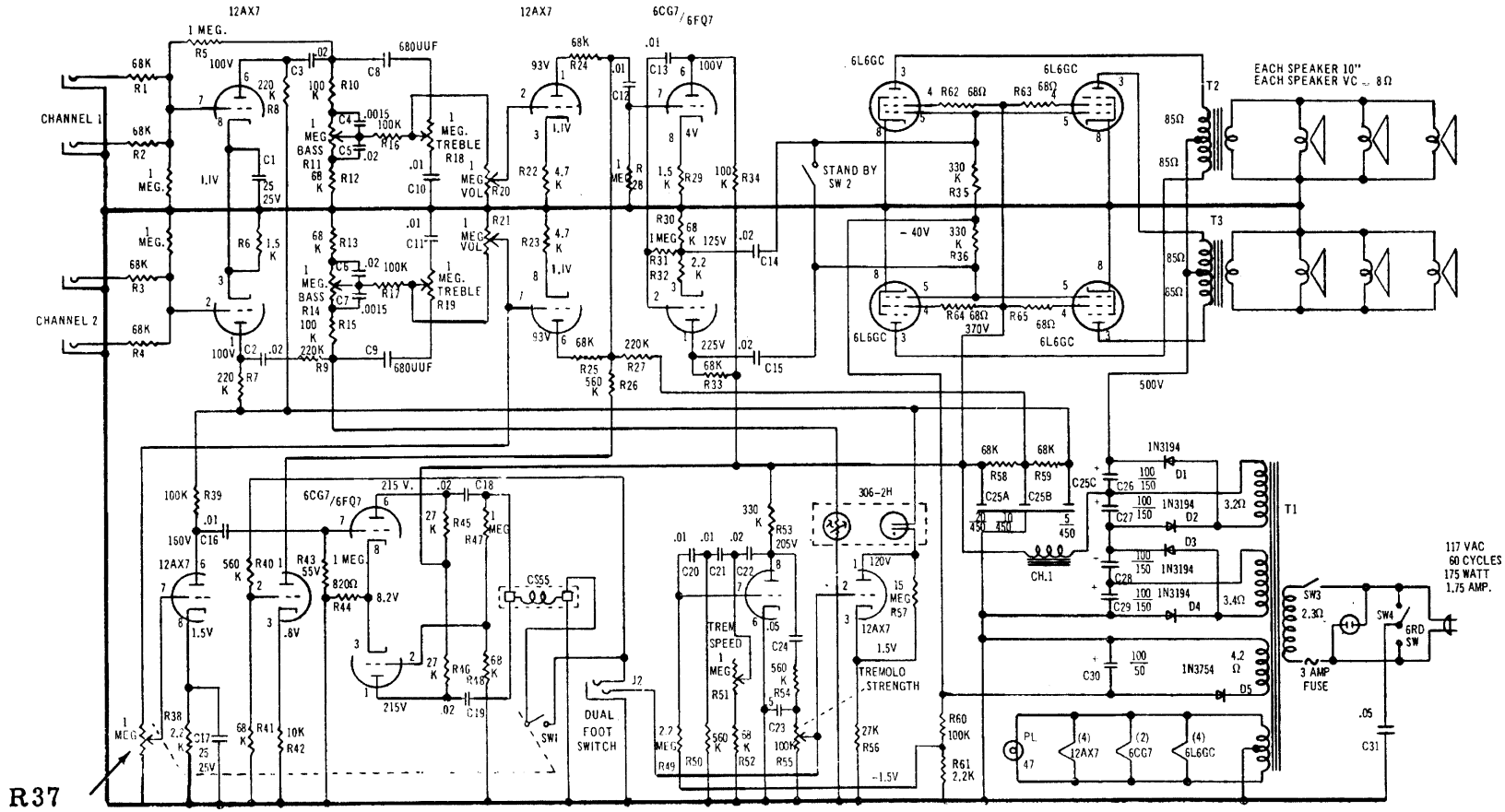

SCHEMATIC DIAGRAM COURTESY
OF SEARS ROEBUCK & CO. APRIL 1964

LESS TWO "6L6's"
SIMILAR MODEL 14

SILVERTONE MODEL 1485 (CH. 185.11050)

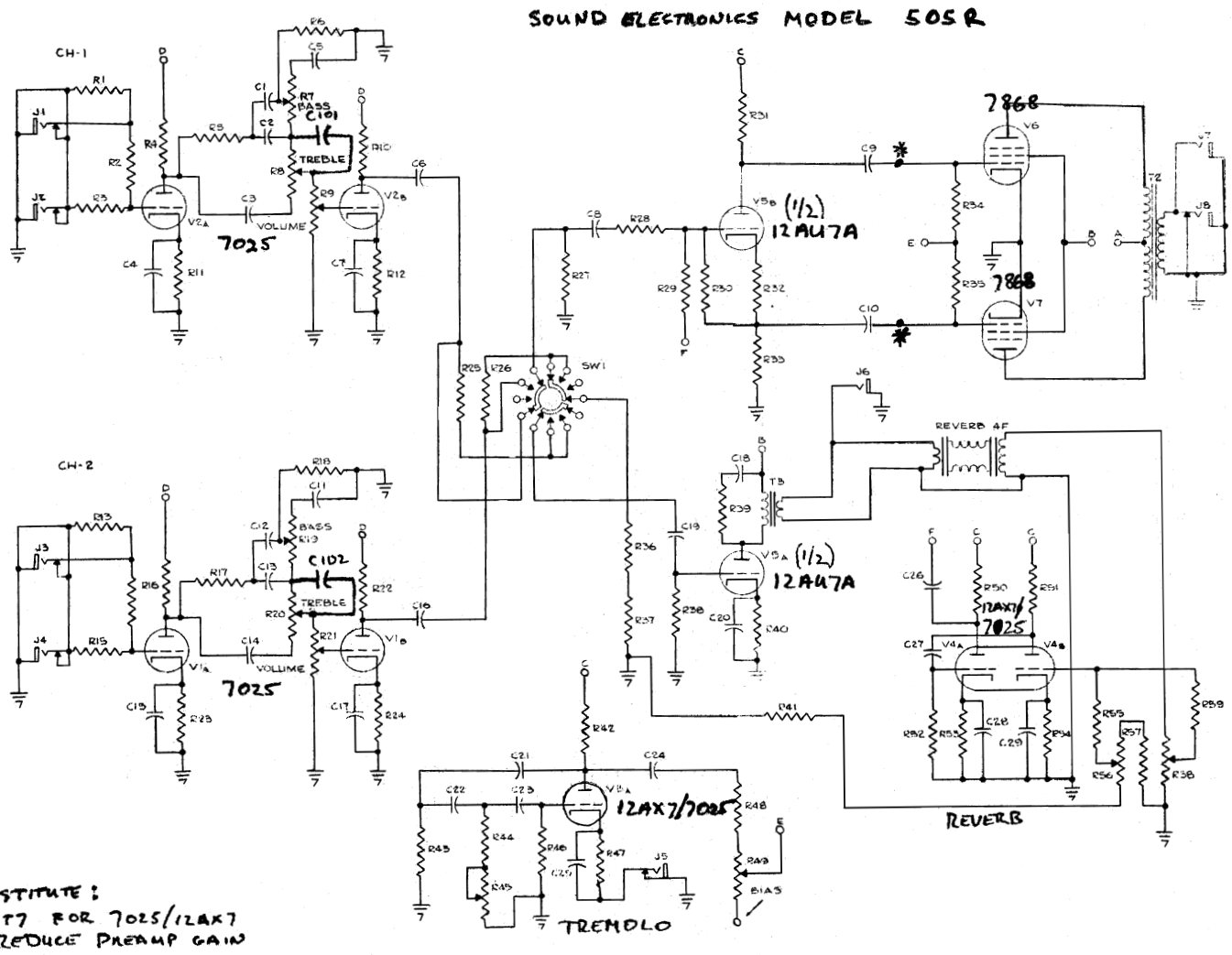

SUBSTITUTE:
12AT7 FOR 7025/12AX7
TO REDUCE PREAMP GAIN

CHANNEL 1 SUBSTITUTE 220pf ACROSS VOLUME CONTROL
FOR ORIGINAL 330pf (C101)
CHANNEL 2 ADD 47pf ACROSS VOLUME CONTROL (C102)

* MASTER VOLUME MODIFICATION ON
FOLLOWING PAGE
MASTER VOLUME CONTROL REPLACES J7 EXT. SPEAKER JACK

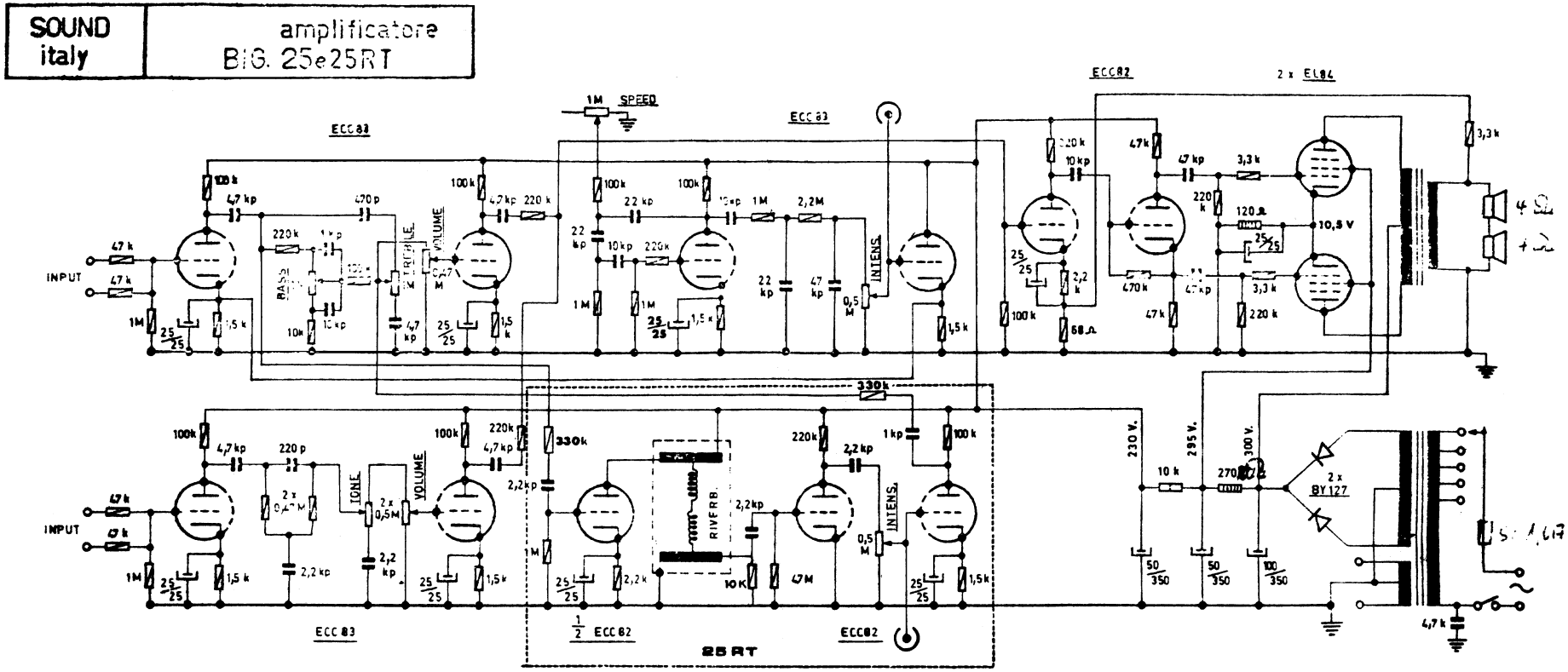
SOUND
italy
amplificatore
BIG. 25e25RT
ECC 83
ECC 82
2 x EL84
1M SPEED
INPUT
VOLUME
TONE
INTENS.
RIVERB.
330k
230 V.
295 V.
300 V.
2 x BY127
25 RT
1/2 ECC 82
4 Ω
8 Ω

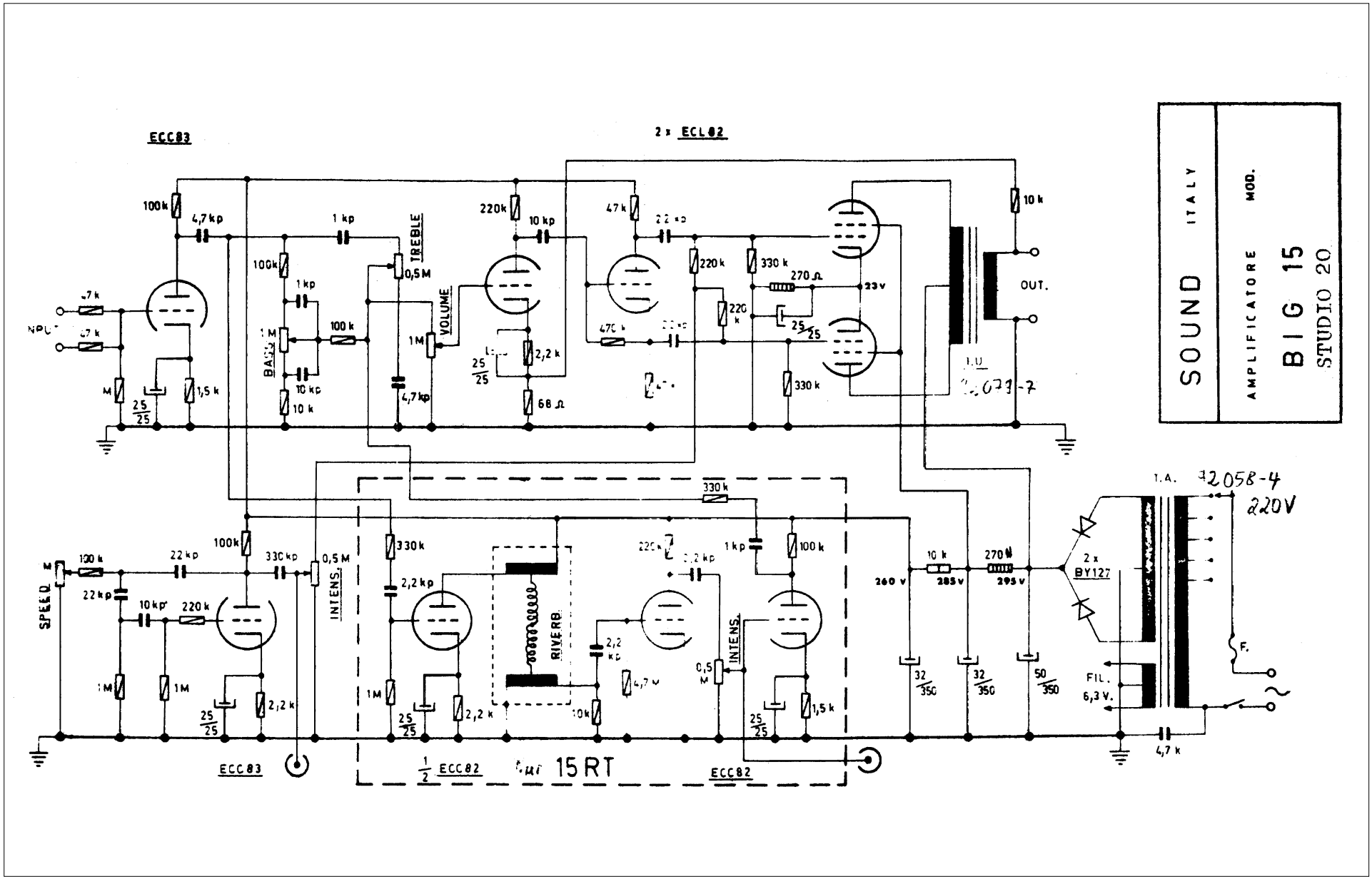
ECC83
2 x ECL82
SOUND
ITALY
AMPLIFICATORE
MOD.
BIG 15
STUDIO 20
TREBLE
VOLUME
BASS
INTENS.
SPEED
RIVERB.
OUT.
INPUT
2 x BY127
FIL. 6,3 V.
T.A.
220V
ECC83
1/2 ECC82
15 RT
ECC82

120w SLAVE

Sound City

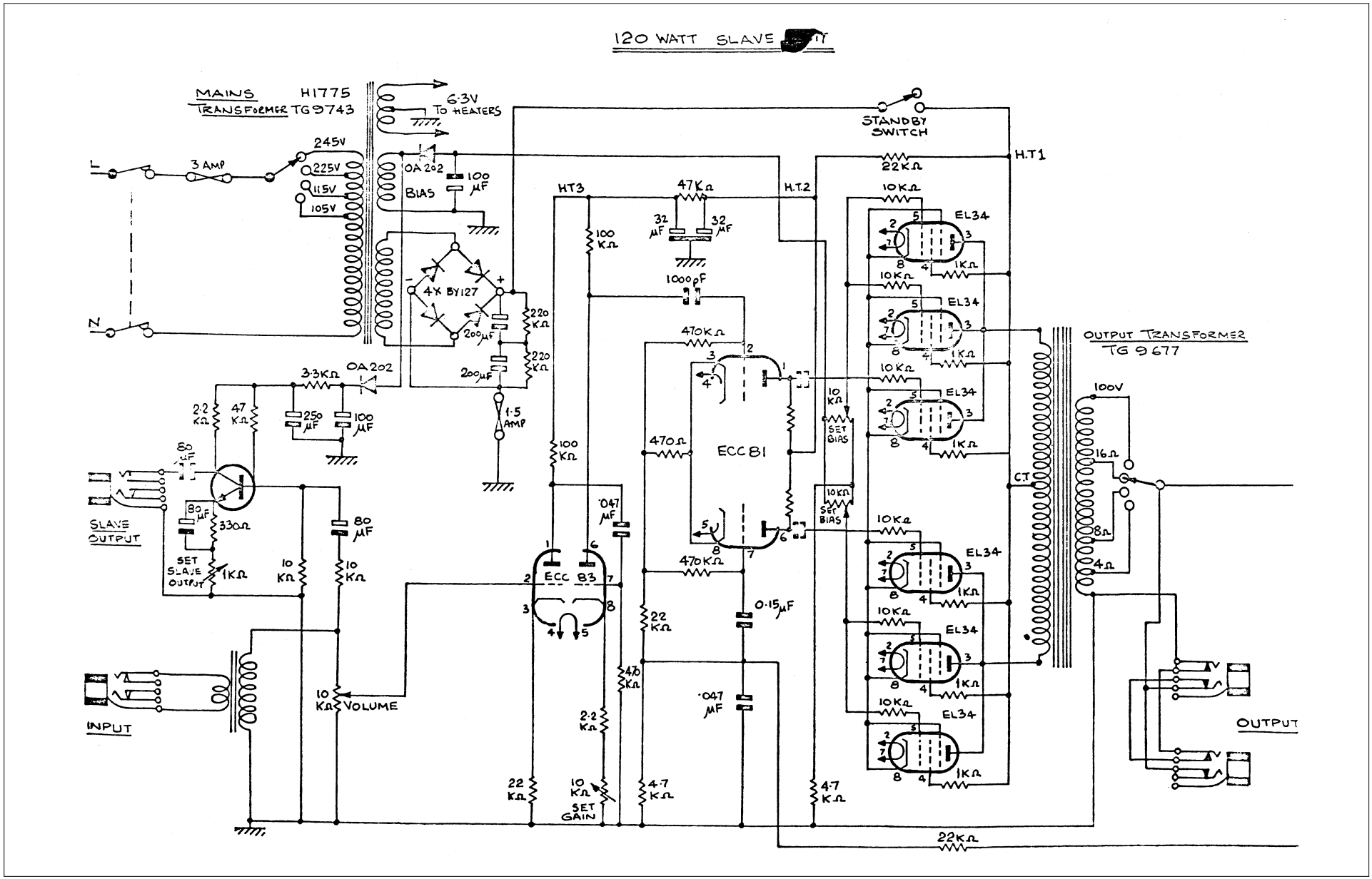

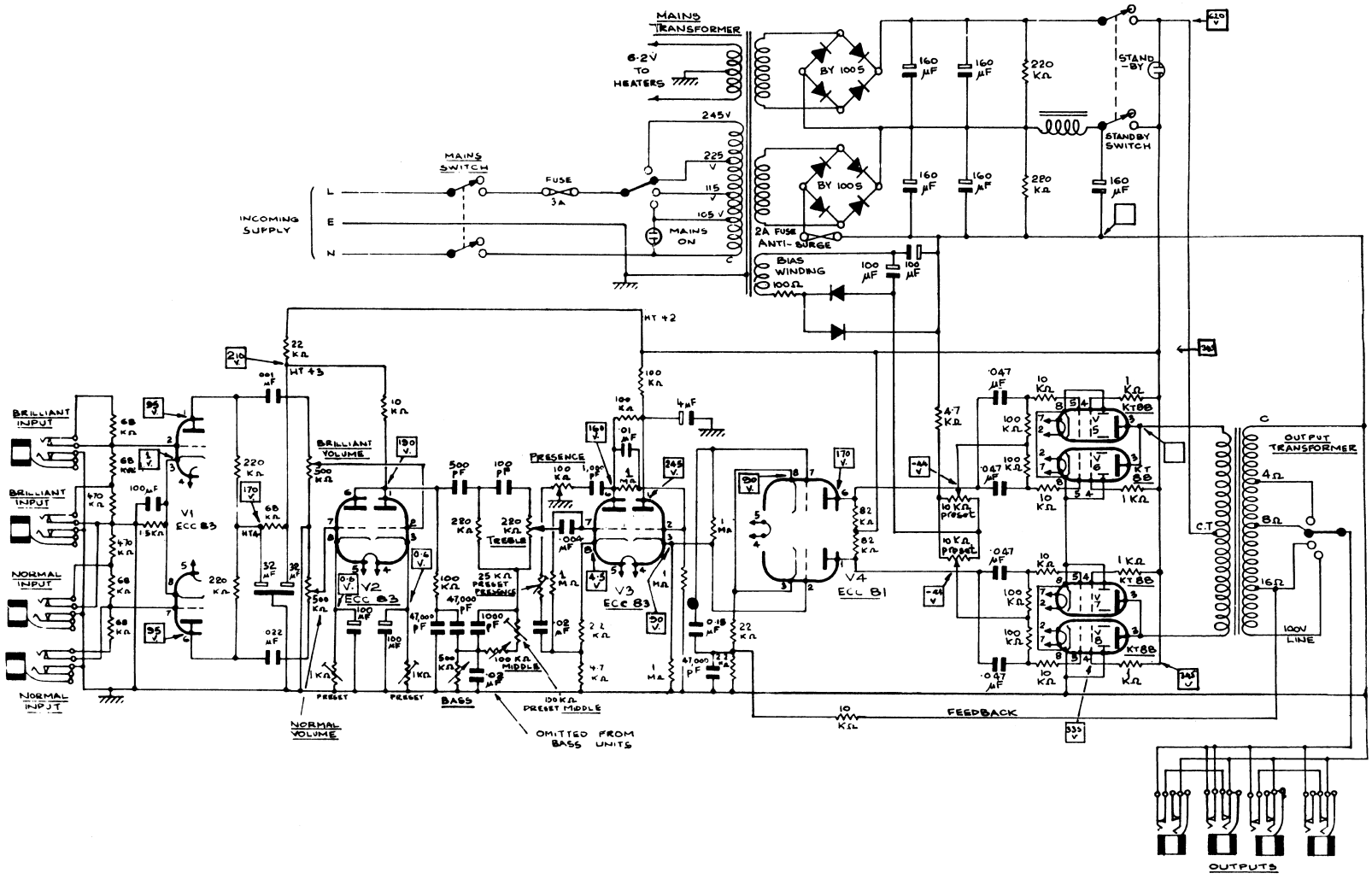

MADE IN ENGLAND BY DALLAS ARBITER LTD.

SOUND CITY AMPLIFIER TYPE 200W LE

B 150

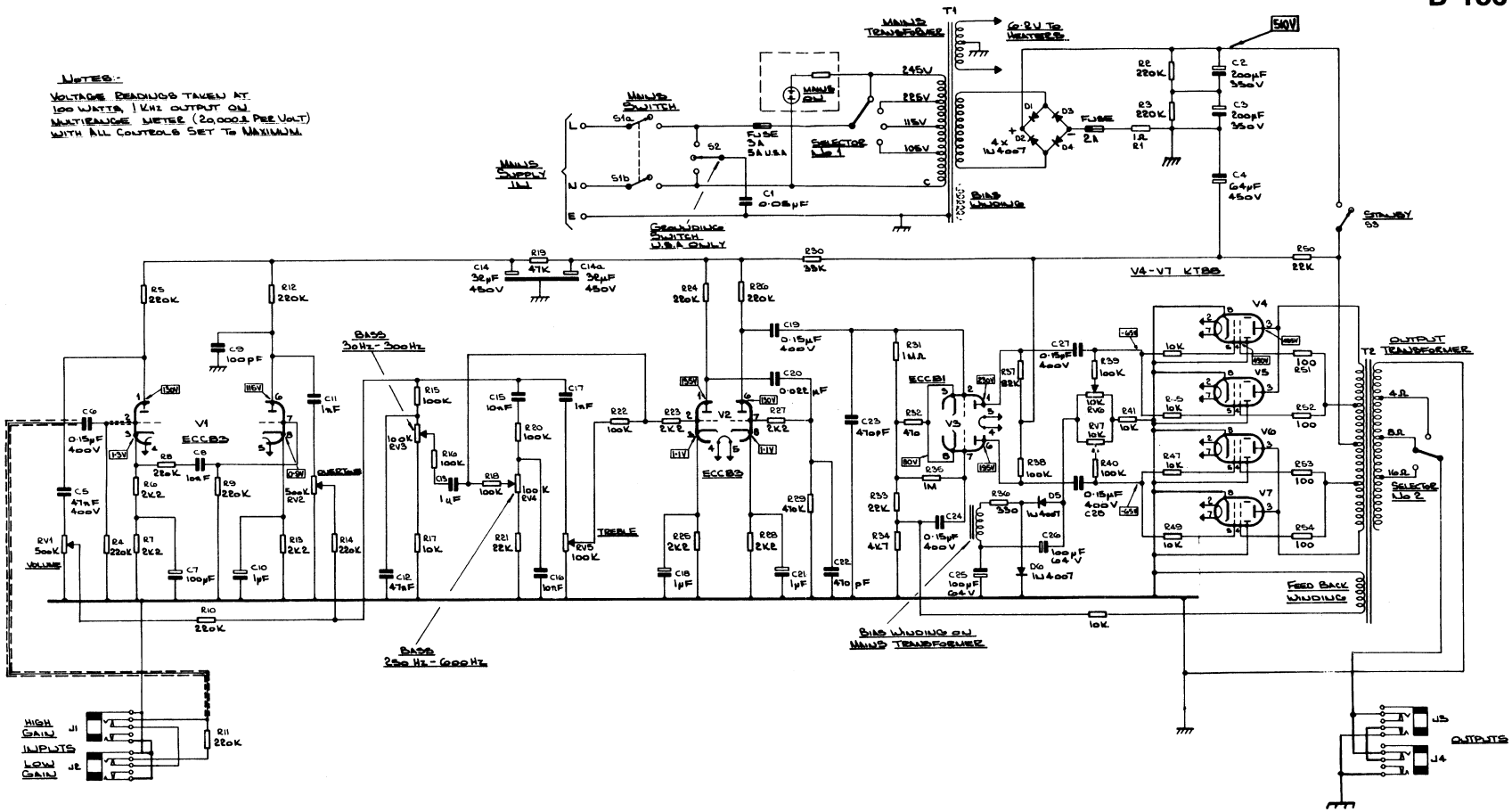

MADE IN ENGLAND BY DALLAS MUSIC INDUSTRIES LTD

SOUND CITY AMPLIFIER TYPE BASS 150

No	REVISION	DATE
C	C13 DID READ 1nF C16 DID READ 10nF COMPONENT REFS ADDED	19-12-73
B	VOLTAGE READINGS ADDED	6-12-73

DEG. No. SC 2601/10 1SS

DRW
DATE 27th OCT 73

CIRCUIT DIAGRAM FOR BASS 150 AMPLIFIER

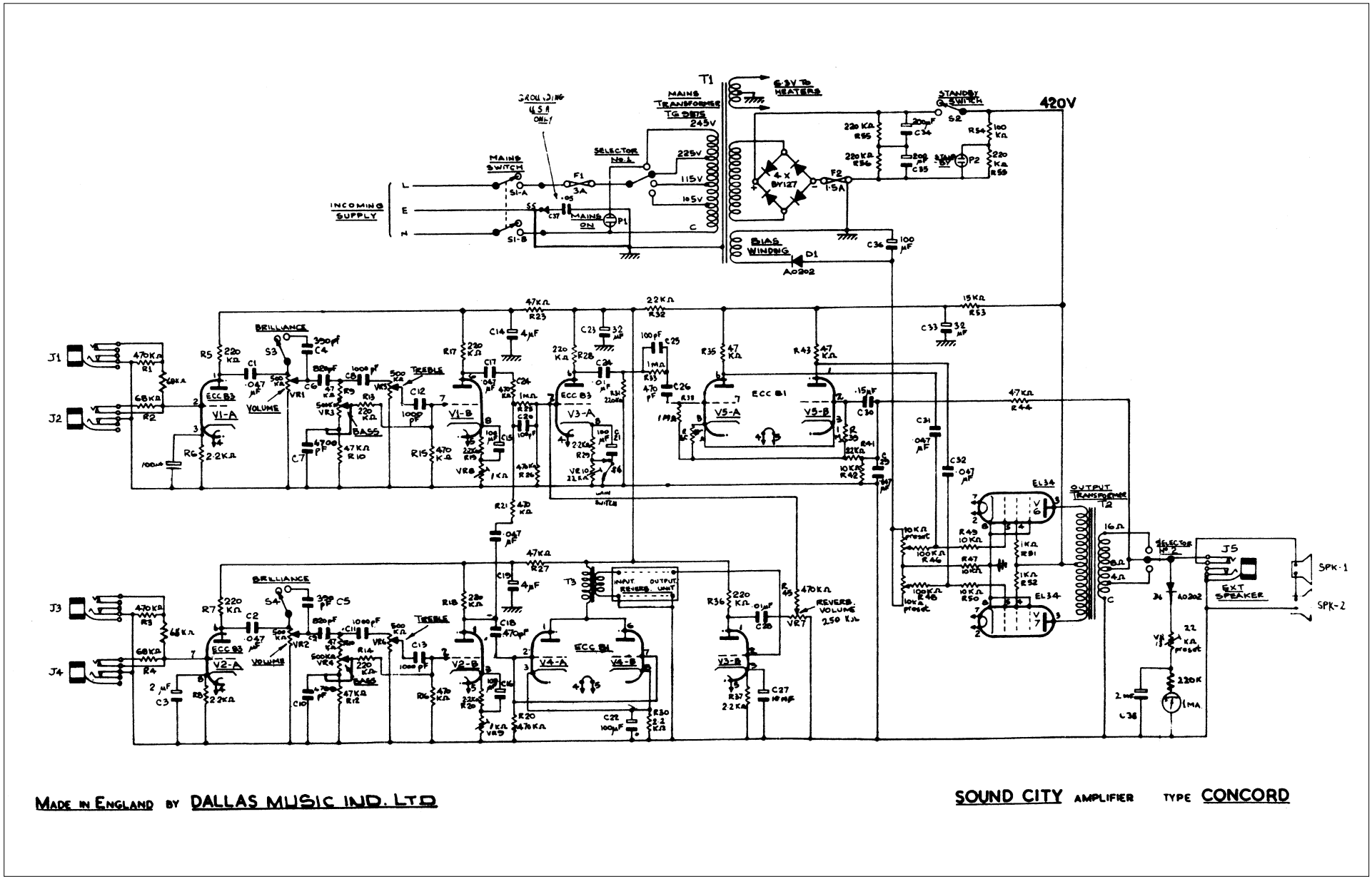

MADE IN ENGLAND BY DALLAS MUSIC IND. LTD

SOUND CITY AMPLIFIER TYPE CONCORD

L-B 120 **MARK IV**

Sound City

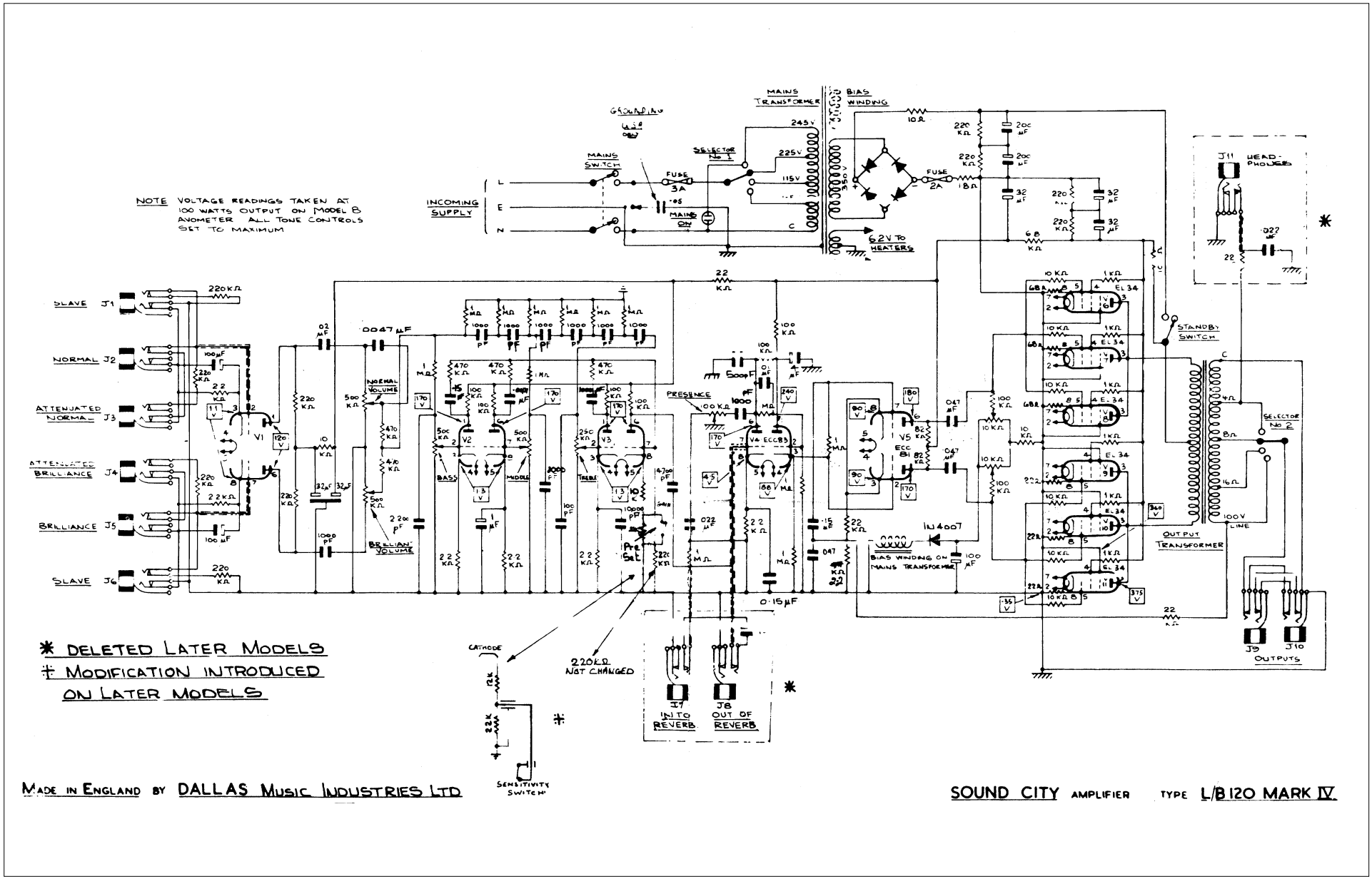

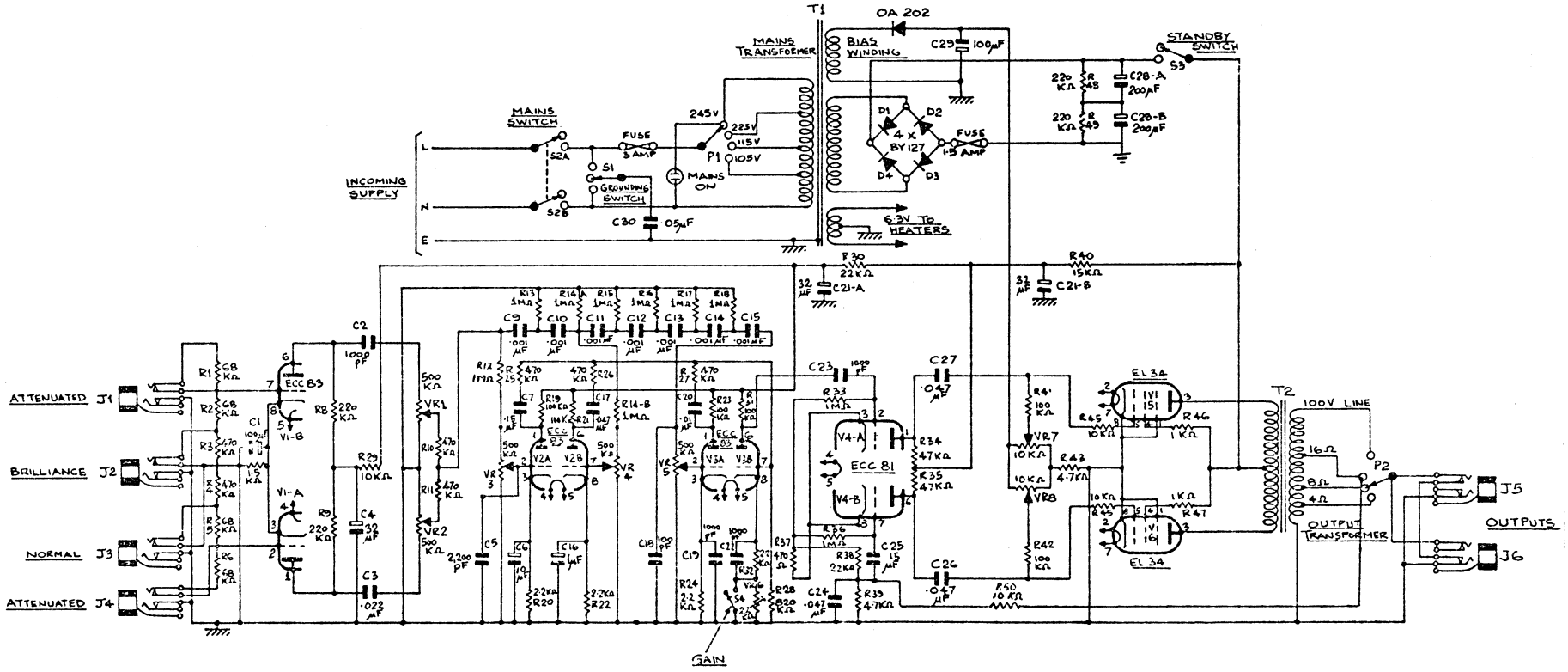

MADE IN ENGLAND BY DALLAS ARBITER LTD.

SOUND CITY AMPLIFIER TYPE L-B 50 PLUS

L-B 100w **M3234**

Sound City

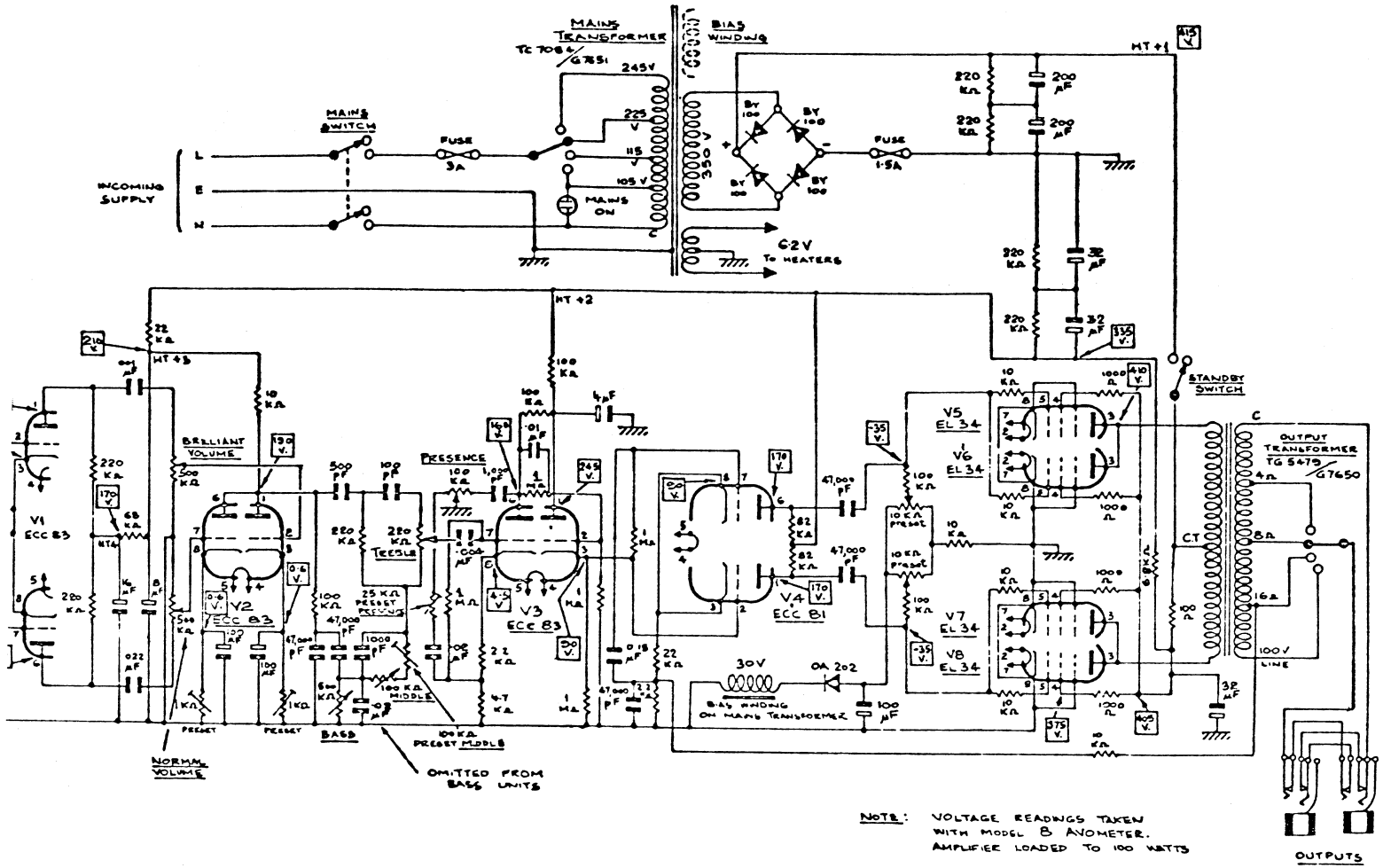

NOTE: VOLTAGE READINGS TAKEN WITH MODEL B AVOMETER. AMPLIFIER LOADED TO 100 WATTS

DALLAS ARBITER LTD.

SOUND CITY AMPLIFIER TYPE L/B 100W M3234

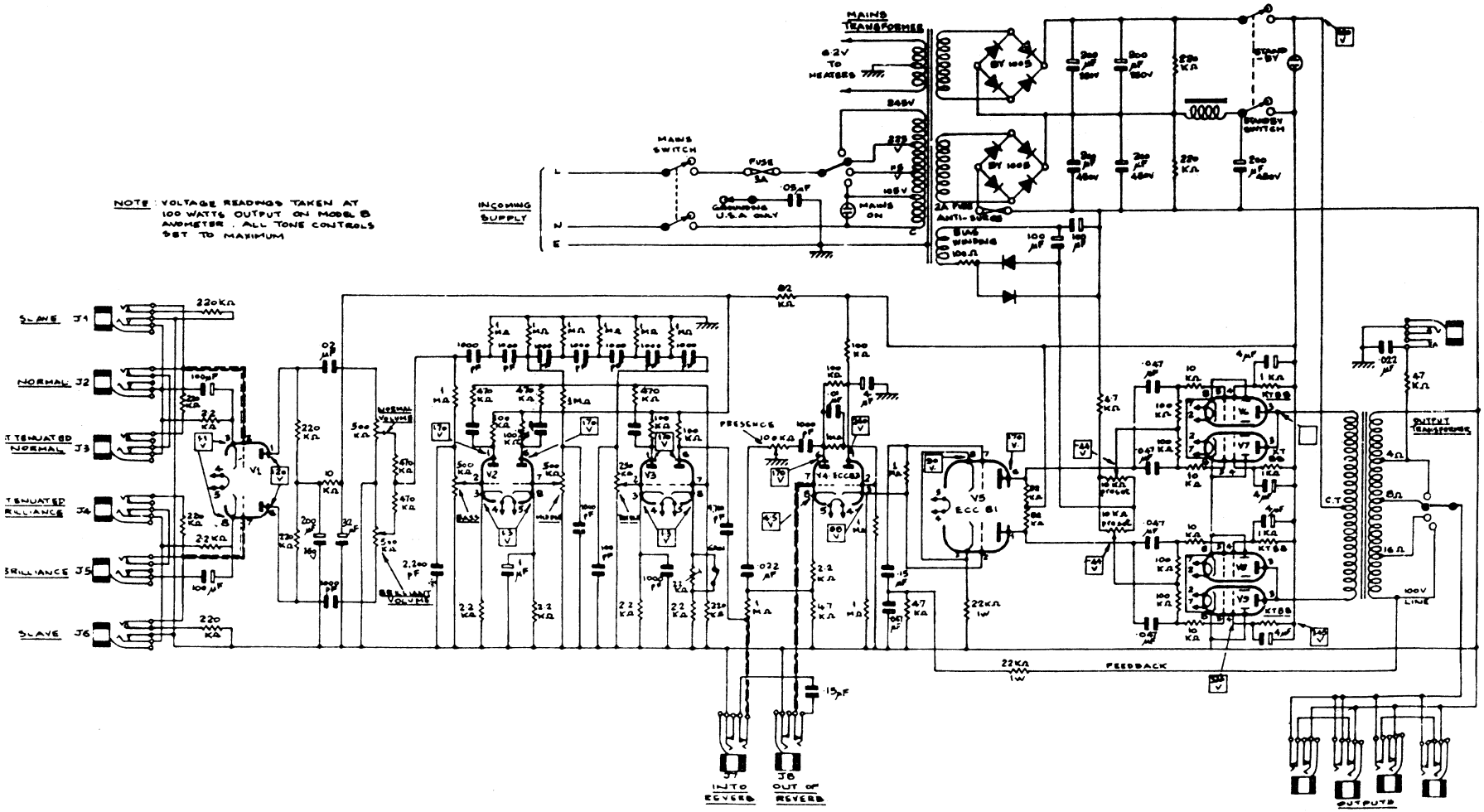

ENGLAND BY DALLAS ARBITER LTD.

SOUND CITY AMPLIFIER TYPE LB 200 PLUS

MIG 50 MASTER VOLUME

Sovtek

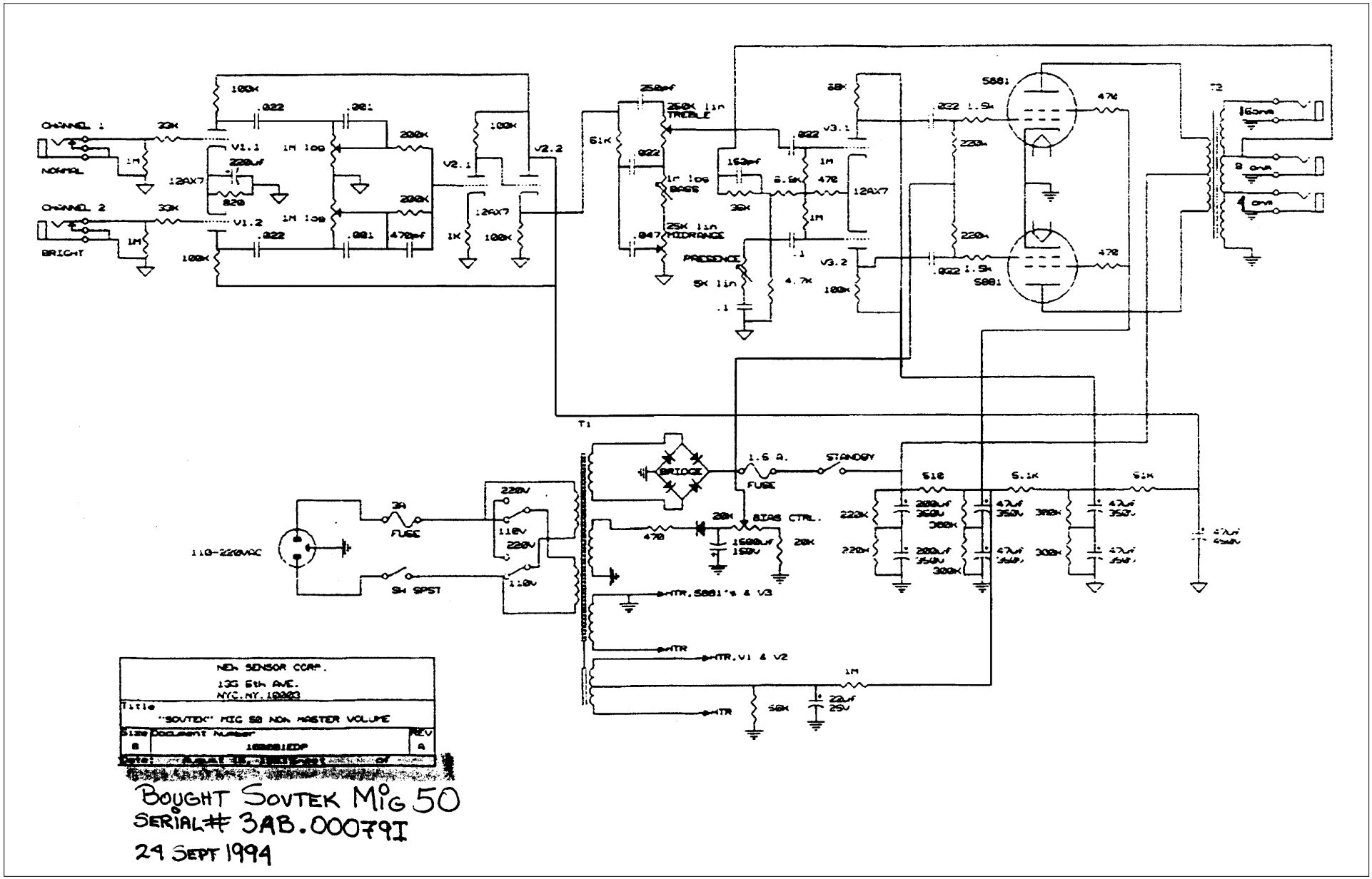

BOUGHT SOVTEK MIG 50
SERIAL# 3AB.00079I
24 SEPT 1994

MIG 60 LEAD
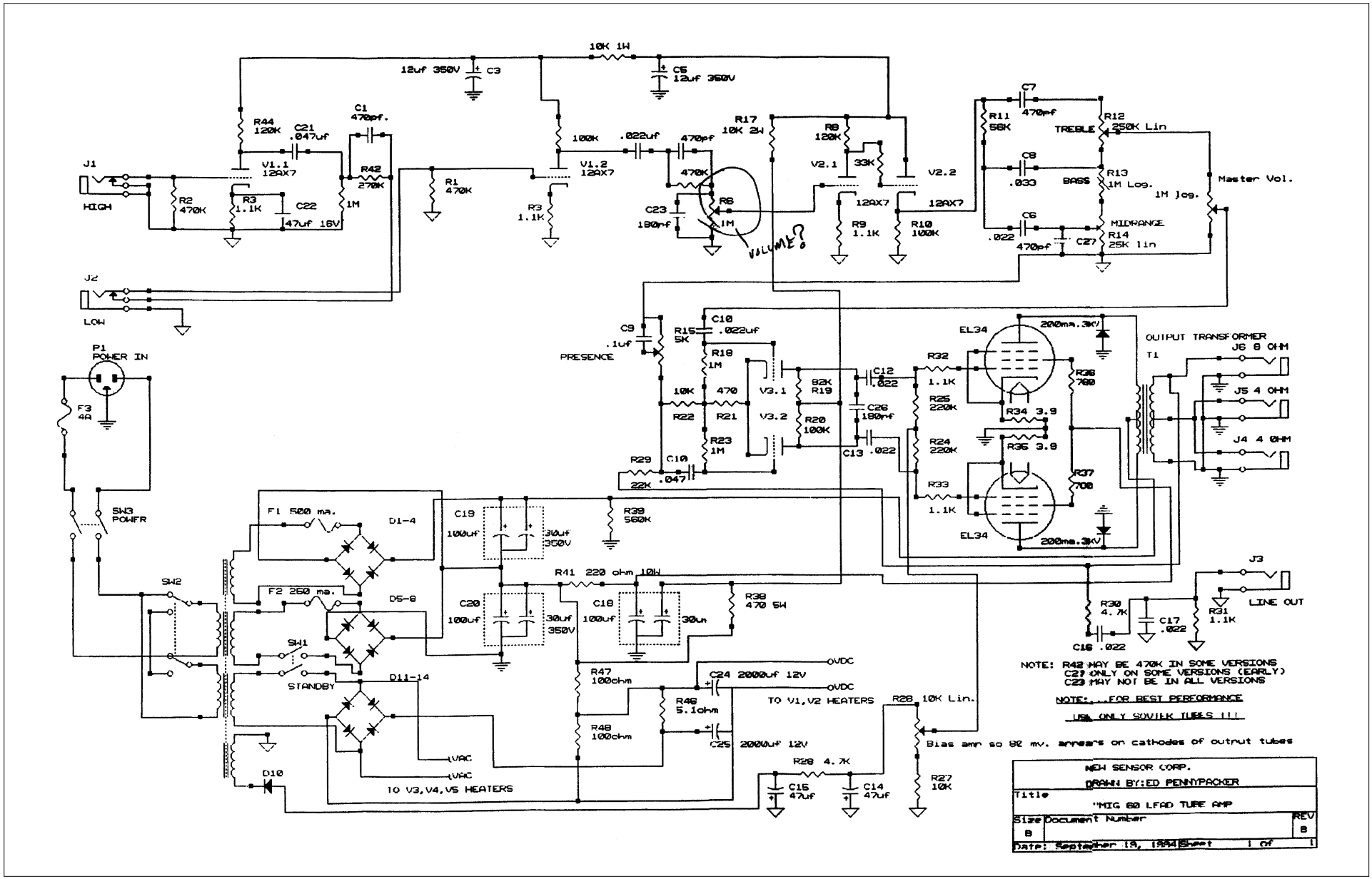
Sovtek