ASTOR

MODEL GF 061

"CONCERT MASTER"

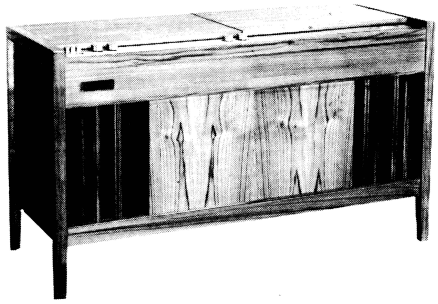

SERVICE DATA

SPECIFICATIONS

Tuning range	512–1635 kHz
Intermediate frequency	455 kHz
Supply	240 V 50 Hz 25 Watts (approx.)
Speaker Impedance	8 ohm
Power Output	2 Watts R.M.S. per channel

TO REMOVE ESCUTCHEON

Unplug mains lead at power point. Loosen three screws in the escutcheon and lift out. (Do not remove screws).

ADJUSTMENT OF QUIESCENT CURRENT

CONDITION: No input signal and volume control at minimum.

Connect D.C. mA meter in place of Link TP2. Switch set on and allow current to stabilise. Adjust preset control RV4 until meter reads 8 mA ± 2 mA. Replace Link TP2. Connect D.C. mA meter in place of Link TP3 and adjust RV5 for the same reading. Replace Link TP3.

AMPLIFIER GAIN TEST

CONDITION: Volume and Tone controls at maximum, and Balance control for maximum to the channel being measured.

Connect output meter to output of one channel. Set audio generator frequency to 1 kHz and connect to both inputs. With the generator output level at 12 mV the amplifier output should be no less than 50 mW. Transfer output meter to other channel and repeat above operation. The difference between the two channels should be within 2 dB.

I.F. ALIGNMENT

With controls set as above, tuning gang fully open and output meter connected, apply a 455 kHz signal to P3 on the circuit board. Adjust respectively T3,T2 and T1 for maximum output on meter, and repeat as necessary.

R.F. ALIGNMENT

Connect output of signal generator direct to aerial terminal. With controls as above, and output meter connected, proceed as follows:

With tuning gang fully closed, set dial indicator to low frequency limit mark on dial. Tune to 600 kHz spot on dial, and with generator at this frequency, adjust oscillator coil for maximum output on meter. Now tune to 1400 kHz spot on dial and with generator at this frequency, adjust oscillator trimmer for maximum output. Repeat until both frequencies are correct. Then again tune to 600 kHz spot and adjust peaking ring on rod aerial for maximum output, and at 1400 kHz adjust aerial trimmer for maximum. Repeat as necessary.

7135-992-01

RADIO CORPORATION PTY. LTD.
DIVISION OF
ELECTRONIC INDUSTRIES LTD.

OCTOBER 1972

PARTS LIST

CAPACITORS:

Circuit No.		Description	Tol. ±%	V.W.	Part Number
CV1		Tuning Capacitor)			
CV2		Aerial Trimmer)			4000-065-01
CV3		Oscillator Trimmer)			
C1	.01uF	Ceramic			4008-039-10
C2	.022uF	Ceramic		25	4008-010-06
C3	.01uF	Ceramic	10		4008-039-12
C4	220pF	Polystyrene	50	125	4004-005-11
C5	6.8pF	Ceramic			4008-001-06
C6	10uF	Electrolytic		16	4005-007-37
C7	.022uF	Ceramic		25	4008-010-06
C8	.022uF	Ceramic		25	4008-010-06
C9	220pF	Polystyrene	50	125	4004-005-11
C10	6.8pF	Ceramic			4008-001-06
C11	.1uF	Polyester	10	100	2002 351 00004
C12	.1uF	Polyester	10	100	2002 351 00004
C13	.022uF	Ceramic		25	4008-010-06
C14	.022uF	Ceramic		25	4008-010-06
C16	.022uF	Ceramic		25	4008-010-06
C17	100pF	Ceramic	20		4008-006-15
C18	47uF	Electrolytic		16	4005-040-09
C19	220pF	Polystyrene	50	125	4004-005-11
C21	100pF	Ceramic	20		4008-006-15
C22	100pF	Ceramic	20		4008-006-15
C23	.01uF	Ceramic			4008-039-10
C31	.001uF	Ceramic	10		4008-040-23
C32	.001uF	Ceramic	10		4008-040-23
C33,34	220pF	Ceramic	20		4008-009-06
C37,38	.01uF	Polyester		100	4009-014-38
C41,42	.47uF	Electrolytic		50	2020 002 46477
C43,44	10uF	Electrolytic		16	4005-007-37
C47,48	220uF	Electrolytic		16	4005-059-03
C51,52	150pF	Ceramic	10		4008-035-05
C53,54	.1uF	Polyester		100	2002 351 00004
C55	100uF	Electrolytic		25	4005-002-49
C57,58	470uF	Electrolytic		10	4005-062-02
C61	.01uF	Polyester		630	4009-014-40
C62	2200uF	Electrolytic		35	4005-060-02

RESISTORS:

Circuit No.	Ohm	Description	Tol. ±%	W.	Part Number
RV1	2M+2M	Volume control ganged with "Z5" curve tapped at 900K			4034-008-07
RV2	2M	Balance control with "Z6" curve			4032-009-15
RV3	50K+50K	Tone control ganged with "C" curve			4034-007-01
RV4,5	100	Preset potentiometer			4025-031-05
R2	10K	Carbon	10	½	4022-004-01
R3	47K	Carbon	10	½	4022-051-03
R4	2K7	Carbon	10	½	4022-043-01
R6	120K	Carbon	10	½	4022-031-01
R7	560	Carbon	10	½	4022-010-01
R8	1K	Carbon	10	½	4022-008-01
R9	100K	Carbon	10	½	4022-013-02
R11	1K	Carbon	10	½	4022-008-01
R12	10K	Carbon	10	½	4022-004-01
R13	2K2	Carbon	10	½	4022-021-02
R14	4K7	Carbon	10	½	4022-005-01
R16	33K	Carbon	10	½	4022-059-03
R17	68	Carbon	10	½	4022-024-01
R18	820	Carbon	10	½	4022-009-01
R19	1K	Carbon	10	½	4022-008-01
R21	330	Carbon	10	½	4022-010-01
R22	330K	Carbon	10	½	4022-047-01
R23	150K	Carbon	10	½	4022-038-01
R31,32	1M5	Carbon	10	½	4022-046-01
R33,34	33K	Carbon	10	½	4022-059-03
R37,38	47K	Carbon	10	½	4022-051-03
R41,42	3K3	Carbon	10	½	4022-006-01
R43,44	1M2	Carbon	10	½	4022-064-09
R47,48	2M2	Carbon	10	½	4022-036-14
R51,52	270K	Carbon	10	½	4022-019-01
R53,54	12K	Carbon	10	½	4022-029-01
R57,58	47	Carbon	5	½	4022-041-11
R59	120	Carbon	10	½	4022-039-01
R61,62	4K7	Carbon	10	½	4022-005-01
R63,64	50	NTC Thermistor			4021-069-03
R67,68	680	Carbon	10	½	4022-028-02
R71,72	1	W.W.	10	½	4024-008-02
R73,74	1	W.W.	10	½	4024-008-02
R81,82	470	Carbon	10	½	4022-016-01

MISCELLANEOUS:

Circuit No.	Description	Part Number
L1	Aerial loading coil	4036-051-01
L2	Aerial rod assembly	4074-214-01
L3	Oscillator coil	4043-094-01
T1	I.F. transformer	4044-031-01
T2	I.F. transformer	4044-031-02
T3	I.F. transformer	4044-031-03
S1,S2,S3	Push button switch assembly	4059-269-01
	Power transformer	4041-065-02
LP1,LP2	Pilot lamps	4068-024-01
	Record changer (B.S.R. C129-A1) includes Tetrad Cartridge 2C2 SA Stylus C2S (GOLDRING S464)	4060-026-01
LS1,LS2	Speaker (Plessey 96HX00/682/8)	4056-004-26

SEMI CONDUCTORS:

TR1	BF 194	Converter
TR2	BF 195	I.F. Amplifier
TR3	BF 195	I.F. Amplifier
TR4, TR5	BC 149	Audio Amplifier
TR6, TR7	BC 158	Audio Driver
TR8, TR9	AC 187	Audio Output
TR10, TR11	AC 188	Audio Output
D1, D2	OA 90	A.G.C.
D3	AA 119	Detector
D4, D5	BY 126/100	Rectifier

MECHANICAL:

	Part Number
Dial	7070-160-02
Drum, dial	7077-046-01
Pointer, dial	7173-099-01
Pulley, dial	7174-015-04
"C" Clip, pulley	7055-250-01
Tuning spindle	7224-007-06
Socket, pilot globe	7222-215-01
Escutcheon (control panel)	7179-372-01
Knob (4)	7124-546-01
Knob (3) Push-button	7124-545-01
Aerial Panel	7160-475-01
Headphone Socket	7122-003-02
Tape Socket	7222-201-01

STYLING:

CABINET	
Maple (Polyester)	7038-049-01
Walnut (Satin)	7038-049-12
Teak (Oiled)	7038-049-24

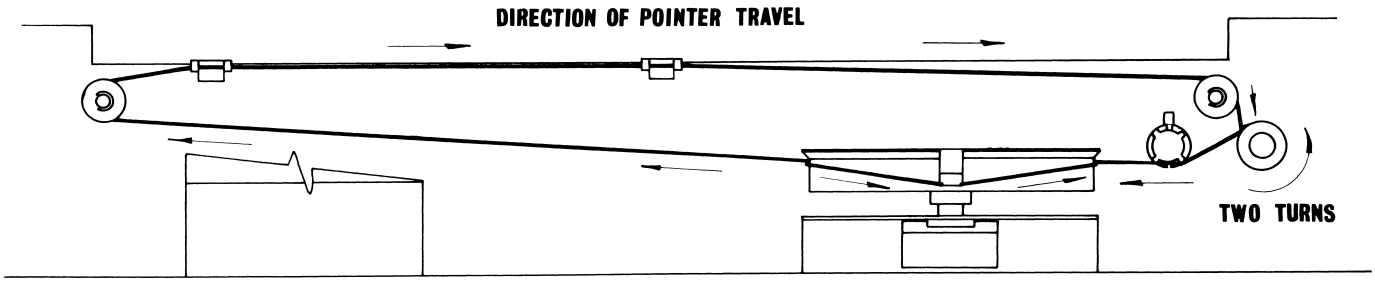

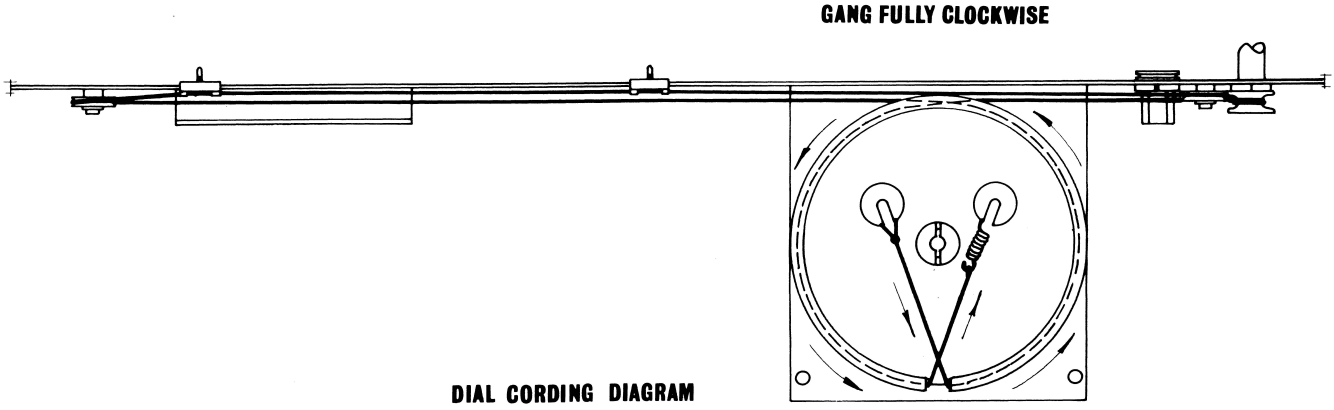

DIAL CORDING DIAGRAM

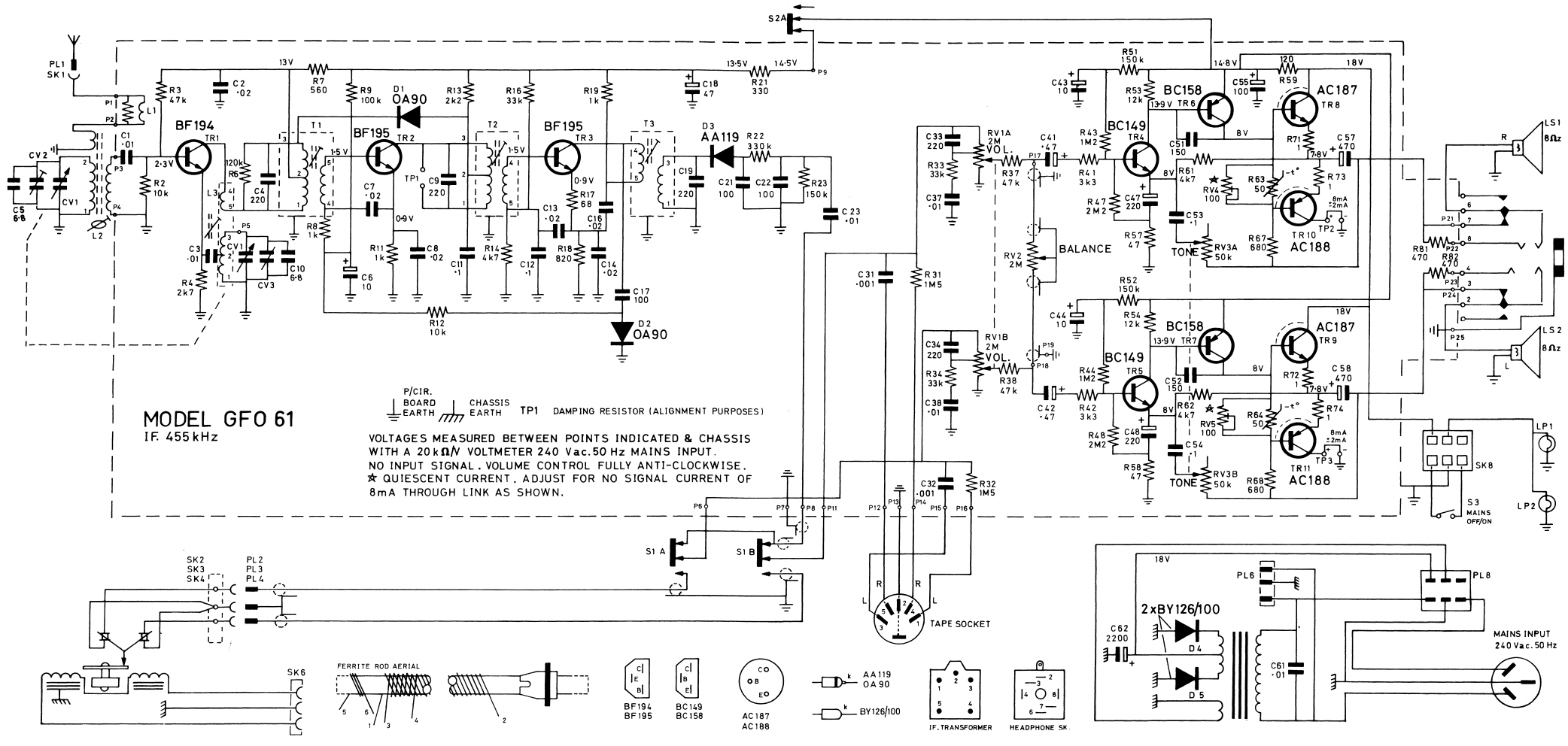
MODEL GFO 61
I.F. 455 kHz
P/CIR. BOARD EARTH
CHASSIS EARTH
TP1 DAMPING RESISTOR (ALIGNMENT PURPOSES)
VOLTAGES MEASURED BETWEEN POINTS INDICATED & CHASSIS
WITH A 20 kΩ/V VOLTMETER 240 Vac. 50 Hz MAINS INPUT.
NO INPUT SIGNAL. VOLUME CONTROL FULLY ANTI-CLOCKWISE.
☆ QUIESCENT CURRENT. ADJUST FOR NO SIGNAL CURRENT OF
8mA THROUGH LINK AS SHOWN.
BF194
BF195
OA90
AA119
BC158
BC149
AC187
AC188
BALANCE
TONE
TAPE SOCKET
2xBY126/100
MAINS INPUT
240 Vac. 50 Hz
FERRITE ROD AERIAL
IF. TRANSFORMER
HEADPHONE SK.
BF194 BF195
BC149 BC158
AC187 AC188
AA119 OA90
BY126/100
TO CHASSIS
TO AERIAL CONNECTOR
TO SWITCH FRAME
TAPE SOCKET REAR VIEW
HEADPHONE SOCKET STEREO
MAINS ON/OFF

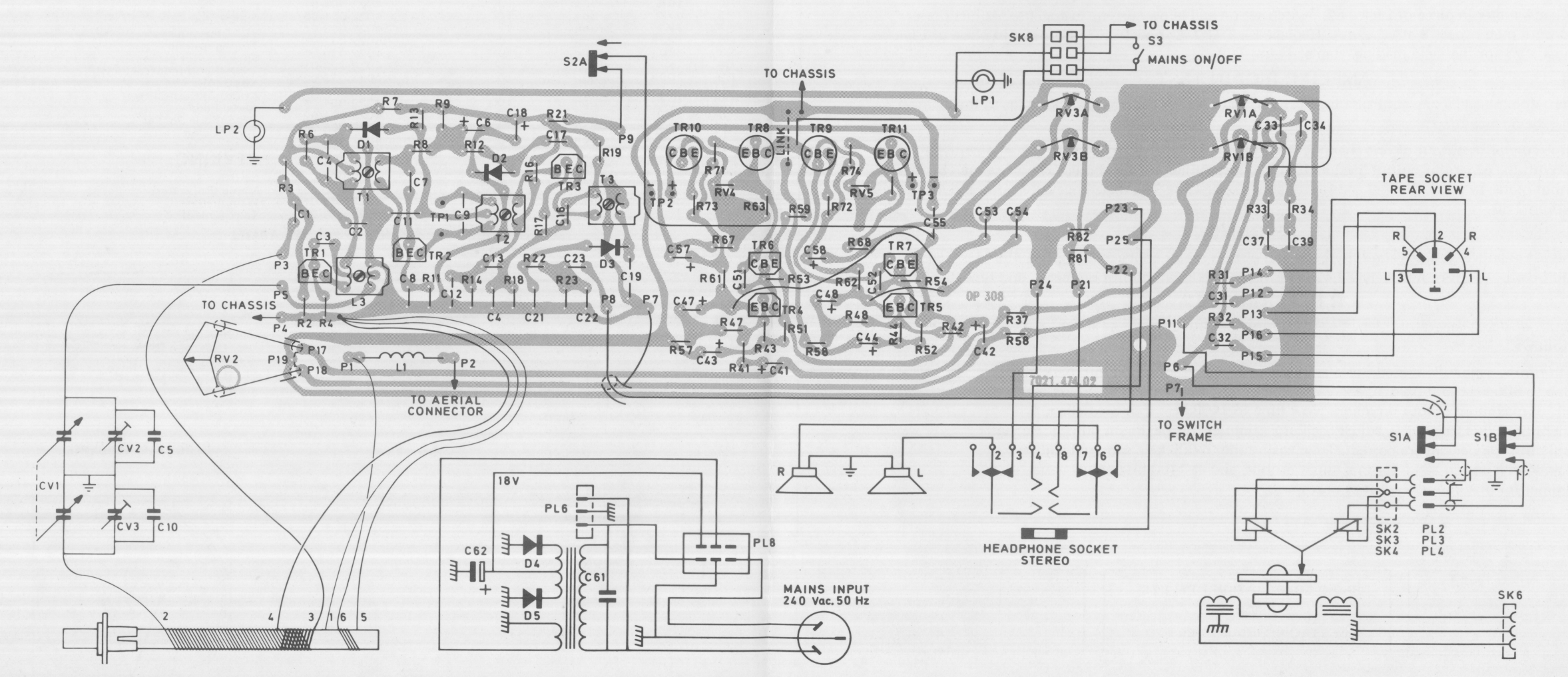
TO CHASSIS
S3
MAINS ON/OFF
SK8
LP1
S2A
LP2
TO CHASSIS
LINK
TR10
TR8
TR9
TR11
RV3A
RV3B
RV1A
RV1B
TAPE SOCKET
REAR VIEW
TR1
TR2
TR3
TR4
TR5
TR6
TR7
T1
T2
T3
L3
L1
RV2
CV1
CV2
CV3
TO CHASSIS
TO AERIAL
CONNECTOR
OP 308
7021.474.02
TO SWITCH
FRAME
S1A
S1B
R
L
HEADPHONE SOCKET
STEREO
SK2
SK3
SK4
PL2
PL3
PL4
SK6
18V
PL6
PL8
C62
D4
D5
C61
MAINS INPUT
240 Vac. 50 Hz