ASTOR

ASTOR ELECTRONICS PTY. LTD.

DIVISION OF ELECTRONIC INDUSTRIES LTD., BOX 183, P.O. SOUTH MELBOURN

Reg. Office: Astor House, 161-173 Sturt St., South Melbourne.

SERVICE DATA

MODEL "G18AE"

11 TRANSISTOR BROADCAST BAND RECEIVER AND A FOUR SPEED STEREO RECORD CHANGER

Tuning Range	525-1610 Kilocylces.
Intermediate frequency	455 Kilocycles.
Power Output	2 Watts each channel
Power Source	240 Volts 50 Cycle.
Power Consumption	12 Watts - Radio
	25 Watts - Gramo.

CAUTION: Disconnect receiver power lead plug from main socket before making adjustments inside the Cabinet.

CHASSIS SERIAL NUMBER

The number is stamped into the rear wall of the chassis and is visible when the cabinet back is removed.

Information contained herein must not be reproduced without prior written permission from Astor Electronics Pty.Ltd.

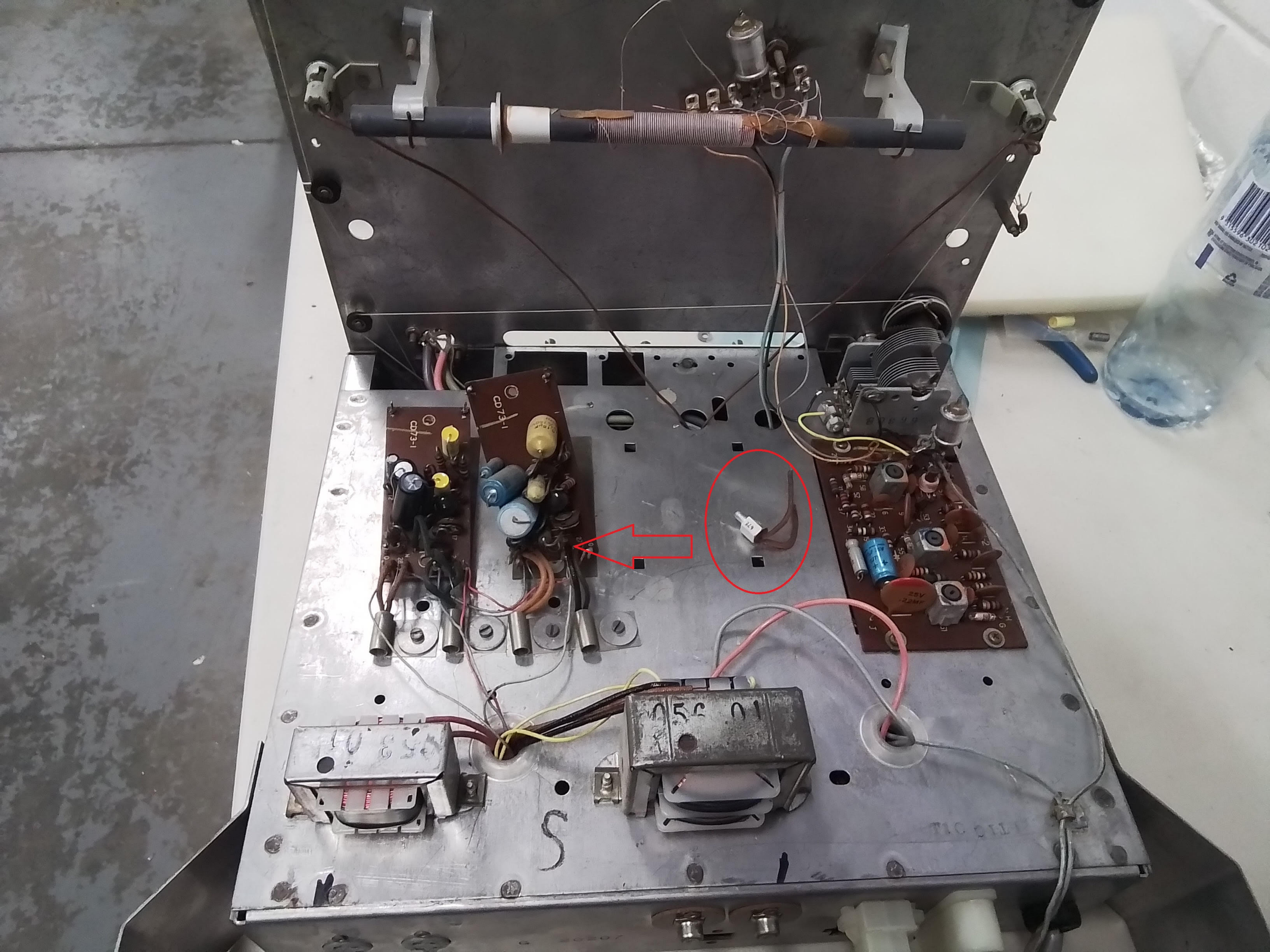
CD73-1
CD73-1
25V
22MF

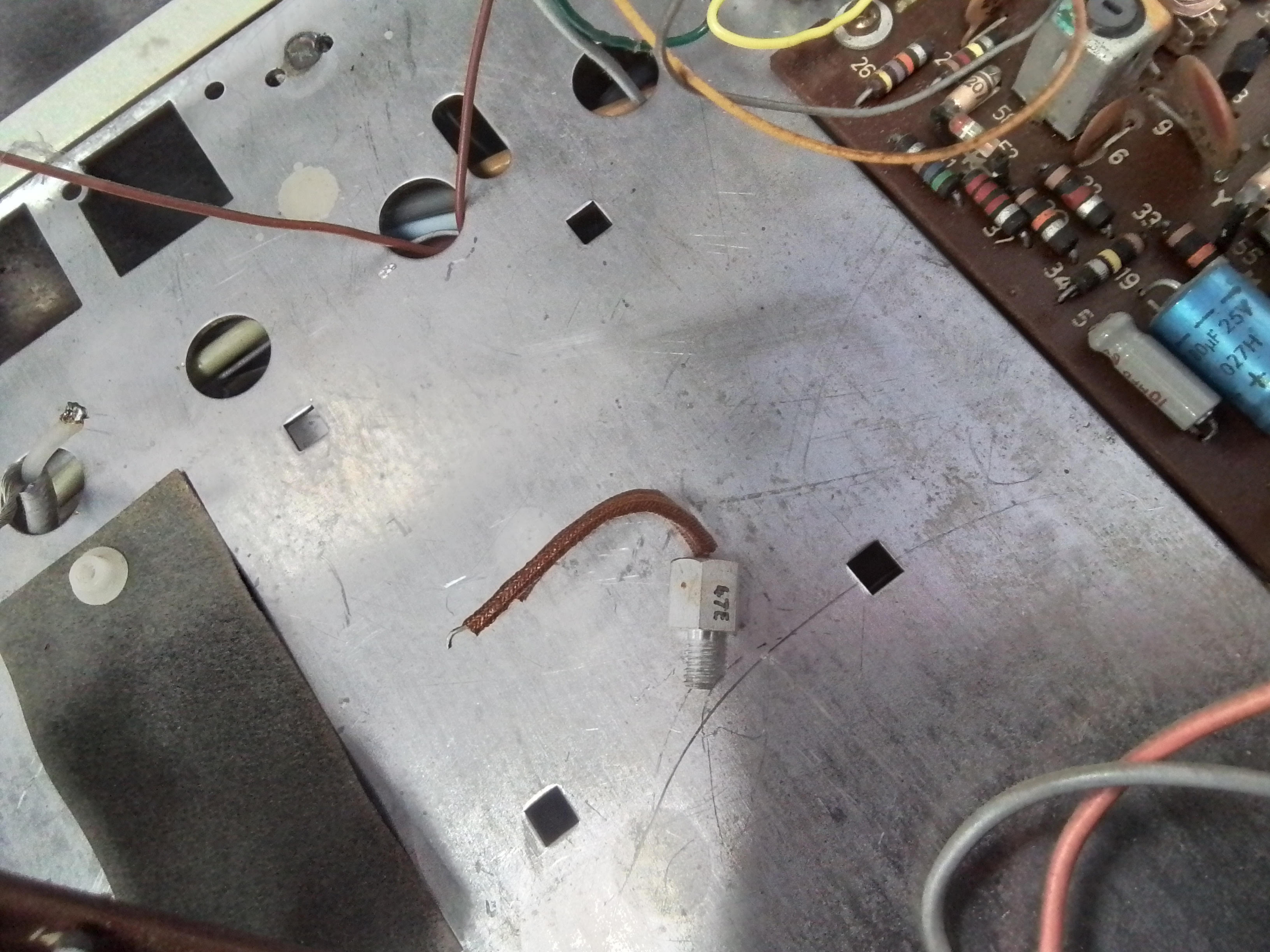
10µF 25V
027H
374

G 20207

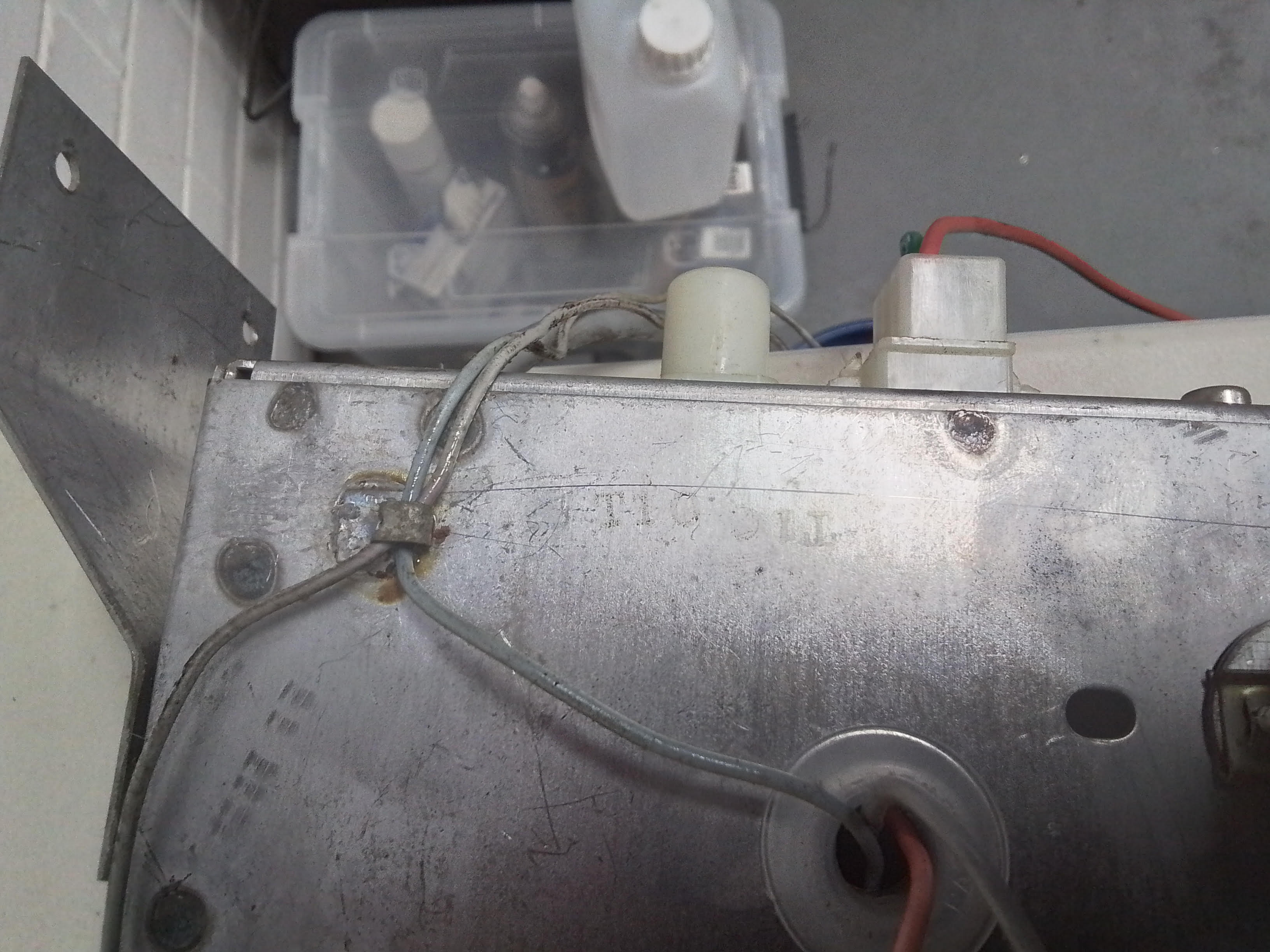

ASTOR

KILOCYCLES
1600 1500 1400 1300 1200 1100 1000 900 800 700 600 550
KILOCYCLES
STH. AUST. 5
VICTORIA 3
N. S. WALES 2
QUEENSLD 4
WEST. AUST. 6
TASMANIA 7
N. S. WALES 2
N.T. & N.G. 8 9
POWER INDICATOR
TAPE OR AUX. INPUT
RADIO
GRAM
OFF
TAPE
VOLUME
TONE
FUNCTION
BALANCE
TUNE
ASTOR SOLID STATE

KILOCYCLES
KILOCYCLES
STH AUST 8
VICTORIA 3
N.S.WALES 2
QUEENSLD 4
WEST AUST 6
TASMANIA 7
N.S.WALES 3
N.T. & N.G. 8 9
POWER INDICATOR
TAPE OR AUX. INPUT
VOLUME
TONE
RADIO
OFF
GRAM
TAPE
FUNCTION
BALANCE
TUNE
ASTOR SOLID STATE

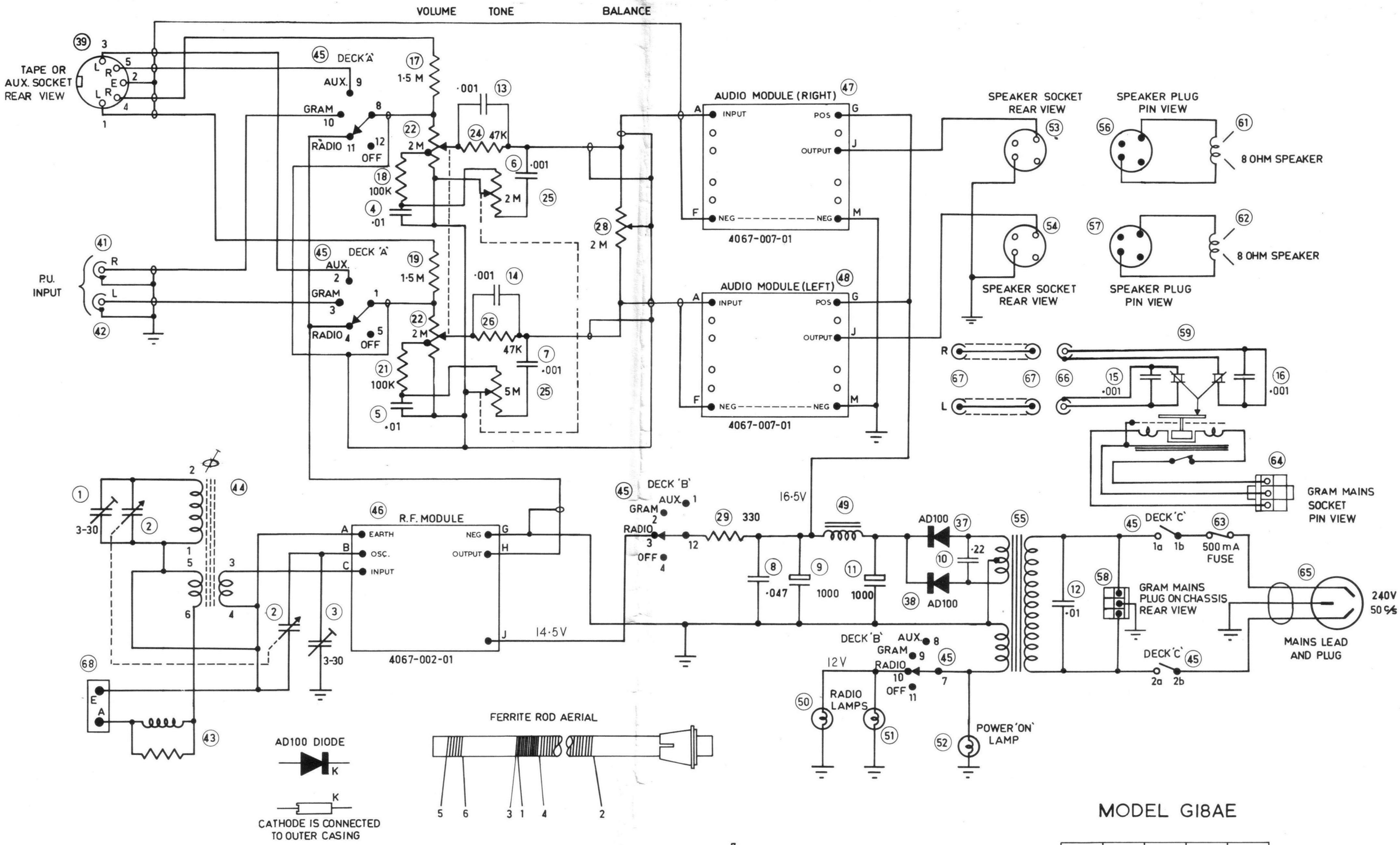

MODEL GI8AE

DRAWN	DATE	CH'ED.	APP'D.	DATE
K.J.D.	24.5.67.	G.L.		11.10.67

ALL VOLTAGES MEASURED BETWEEN POINTS INDICATED AND EARTH WITH A D.C. VACUUM TUBE VOLTMETER. (NO INPUT SIGNAL)

NUMBERS ASSIGNED TO TERMINALS OF COILS AND TRANSFORMERS ARE TO FACILITATE CIRCUIT TRACING AND COMPONENT REPLACEMENT AND MAY NOT BE FOUND ON THE UNIT.

PB 1548.

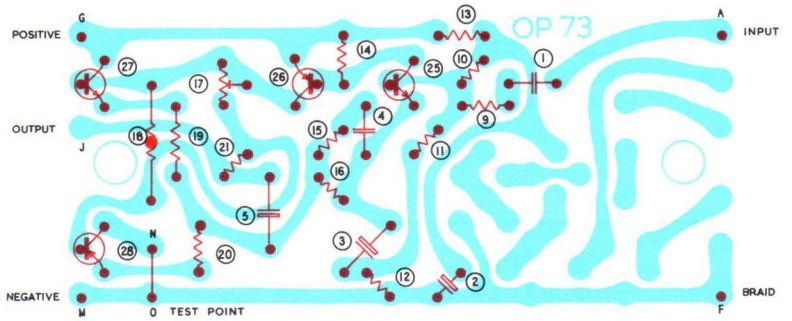

DRAWN	DATE	CHE'D.	APP'D.	DATE
A.J.W.	15·6·67	G.L.	A.A.	10·10·67

PB 1546 A 3

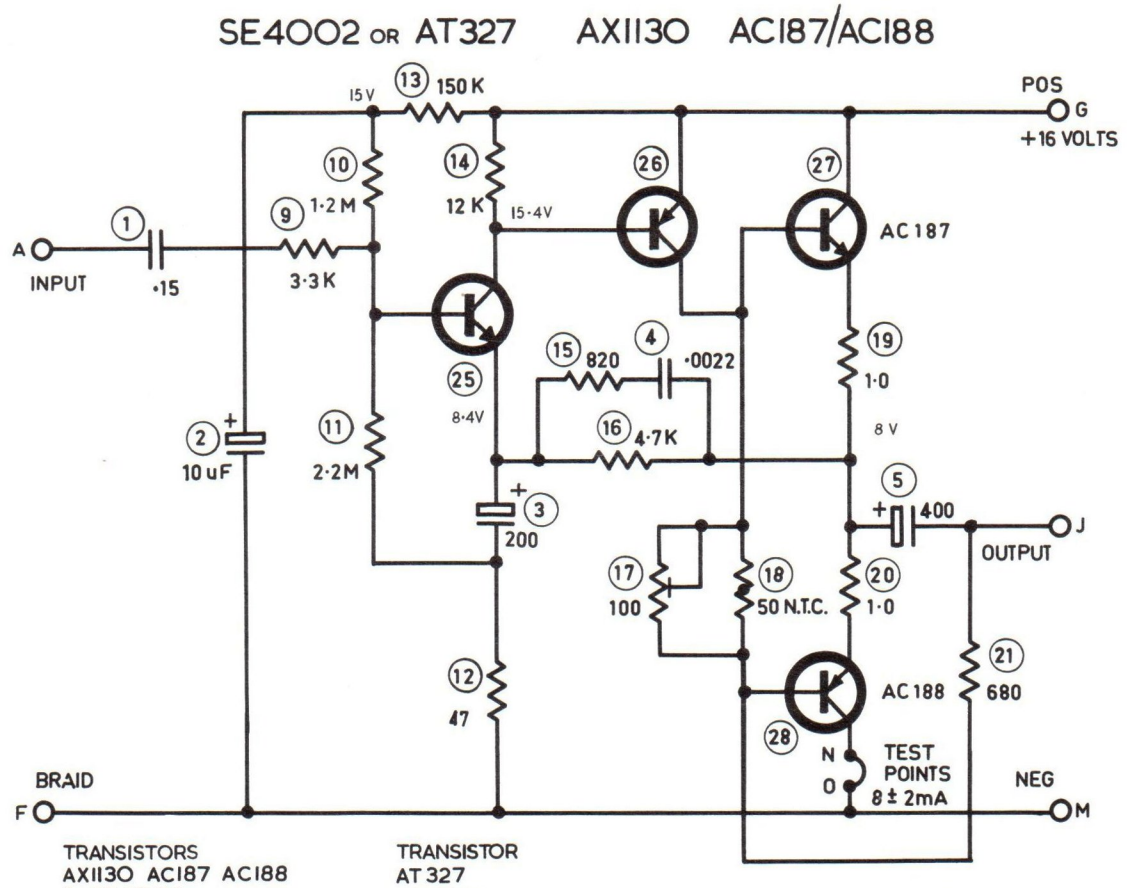

AUDIO MODULE

PART Nº 4067·007-01

DRAWN	DATE	CH'ED.	APP'D.	DATE
K.J.D.	16.5.67.	G.L.	A.A.	13·9·67

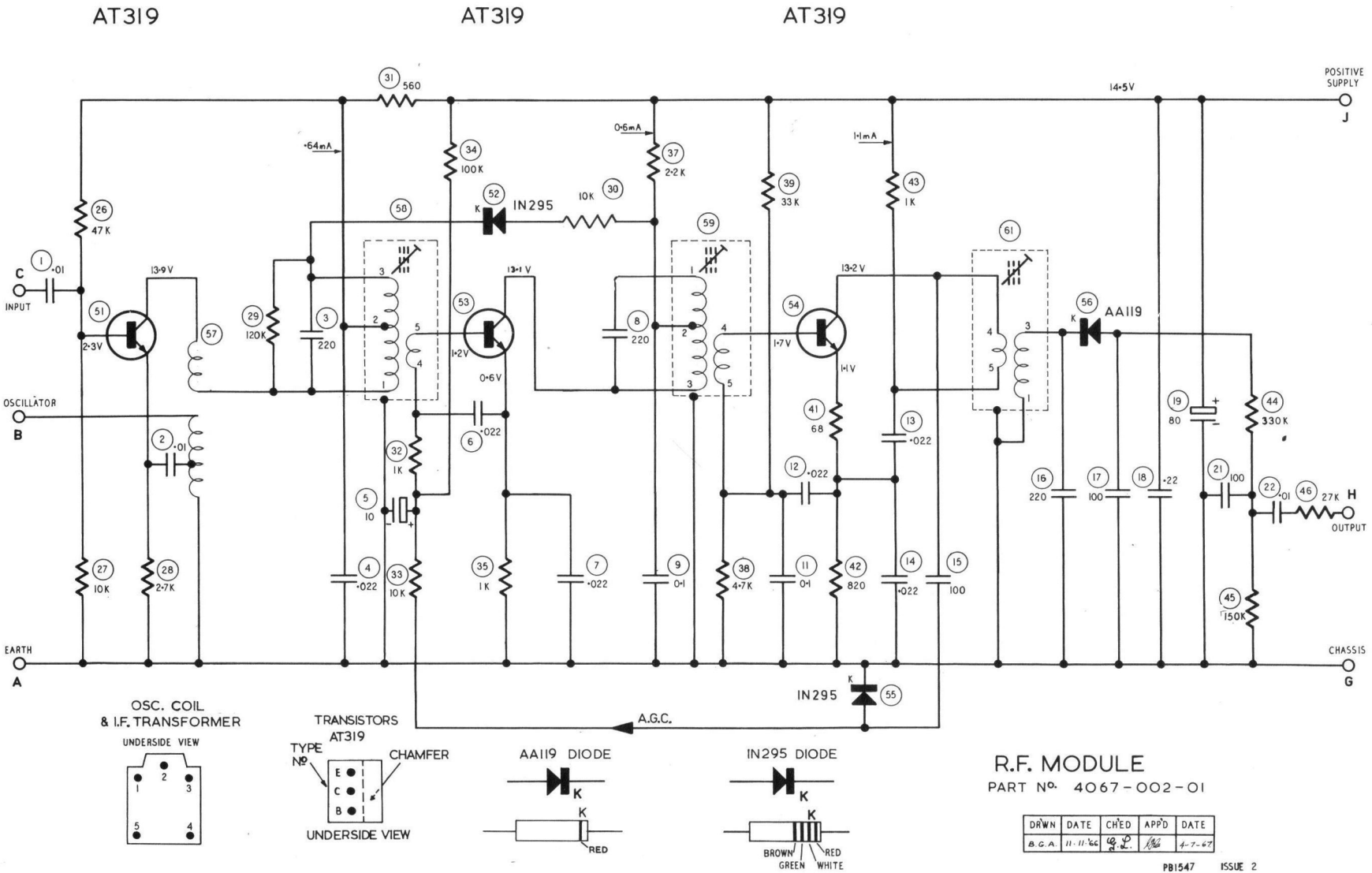
AT319
AT319
AT319
POSITIVE SUPPLY
J
14·5V
31 560
·64mA
0·6mA
1·1mA
34 100K
37 2·2K
39 33K
43 1K
26 47K
52 IN295
10K 30
50
59
61
C
INPUT
1 ·01
13·9V
51
57
29 120K
3 220
53
13·1V
8 220
54
13·2V
56 AA119
2·3V
1·2V
0·6V
1·7V
1·1V
OSCILLATOR
B
2 ·01
6 ·022
32 1K
41 68
13 ·022
12 ·022
19 80
44 330K
16 220
17 100
18 ·22
21 100
22 ·01
46 27K
H
OUTPUT
5 10
27 10K
28 2·7K
4 ·022
33 10K
35 1K
7 ·022
9 0·1
38 4·7K
11 0·1
42 820
14 ·022
15 100
45 150K
EARTH
A
CHASSIS
G
IN295
55
A.G.C.
OSC. COIL
& I.F. TRANSFORMER
UNDERSIDE VIEW
TRANSISTORS
AT319
TYPE Nº
CHAMFER
E
C
B
UNDERSIDE VIEW
AA119 DIODE
K
RED
IN295 DIODE
BROWN
GREEN
RED
WHITE
R.F. MODULE
PART Nº 4067-002-01
DRWN DATE CH'ED APP'D DATE
B.G.A. 11·11·66 4-7-67
PB1547 ISSUE 2

ALIGNMENT EQUIPMENT

Signal Generator	- Modulated 400 cps
Output Meter	- 8 ohms impedance
Generator Series Capacitor	- .1uF Part No.4006-005-03
Alignment Tools	

(a) Flat metal blade end - Part No.4121-001-01 for I.F.T. and Osc. coil iron core adjustment.

(b) Hexagonal socket type - Part No.4121-028-02 for trimmer capacitor adjustment.

ALIGNMENT CONDITIONS

Volume Control	- Maximum, clockwise
Tone Control	- Maximum, clockwise
Balance Control	- Clockwise position.
Function Switch	- "Radio" position.
Output Level	- 50 milliwatts.
Output Meter Connection	- To right channel speaker socket (speaker disconnected).
Supply Voltage	- 240 volt 50 cycle.

INTERMEDIATE FREQUENCY TRANSFORMER ALIGNMENT

Set tuning control to high frequency end of travel.
Insert .1uF capacitor in series with generator "hot" lead.

Oper. No.	Generator Connection	Generator Frequency	Instructions
1.	To pin "C" on "RF" circuit board (term 3 of rod aerial)	455 Kc/s	Adjust iron core of 3rd IF trans. for max.output.
2.	As oper. 1.	455 Kc/s	Adjust iron core of 2nd IF trans. for max. output.
3.	As oper.1.	455 Kc/s	Adjust iron core of 1st IF trans. for max. output.

SETTING THE DIAL POINTER

Turn tuning spindle until tuning capacitor plates are fully in mesh.

Slide pointer along cord until the pointer aligns with the end of travel spot on dial reading.

BROADCAST ALIGNMENT

A. To inject a signal into the receiver connect 2 ft. of aerial wire to the "hot" terminal of signal generator. Fashion wire into a vertical position.

B. Place receiver so that ferrite aerial is uppermost and horizontal.

Tuning end of receiver is to be toward but not less than one foot from generator aerial wire.

Oper. No.	Generator Connection	Generator Frequency	Instructions
1.	Refer Para. A. & B.	525 Kc/s	Tuning capacitor plates fully meshed against end of travel stop. Adjust oscillator coil iron core and rod aerial adjusting ring for maximum output.
2.	As per oper.1	1610 Kc/s	Set tuning pointer to 1610Kc spot on dial. Adjust oscillator and aerial trimmer capacitors for maximum output.
3.	As oper. 1	600 Kc/s	Tune receiver to generator signal and adjust rod aerial adjusting ring for maximum output.
4.	As oper. 1	1400 Kc/s	Tune receiver to generator signal and adjust aerial trimmer capacitor for maximum output.

ADJUSTMENT OF COLLECTOR CURRENT

This should be performed after an audio module or output transistors or associated componentry have been replaced.

EQUIPMENT Current Meter - 0-50mA.DC. terminated with lead and socket assy. Part No.4078-018-01, positive terminal to red sleeve.

CONDITIONS Volume Control set at minimum. No input signal.
Connect an 8 ohm impedance speaker to receiver socket.
Remove link from pins "O" and "N" on Audio Module board.
Place meter lead socket on to test pins "O" and "N". Connector with red sleeving is to be connected to pin "N".

Adjust 100 ohm potentiometer circuit No.17 until a meter reading of 8mA.± 2mA. is indicated.

Remove meter lead plug and reconnect link to test pins.

AUDIO AMPLIFIER GAIN AND BALANCE TEST

Audio Frequency Generator	- 1000 cps. - 600 ohms impedance.
Output Meter	- 8 ohms.
Volume Control	- Maximum, clockwise
Tone Control	- Maximum, clockwise
Balance Control	- Clockwise position
Function Switch	- GRAM position

Disconnect pick-up leads from input sockets.
Connect audio generator output leads to an input socket.
Connect an 8 ohm speaker to one output socket and the output meter to the other output socket.
Set the output of audio generator to 16 millivolts.
With equipment connected as above, the output meter should read a minimum of 50 milliwatts.
Exchange output meter and speaker connections to opposite channels. Turn Balance Control to anticlockwise position.
Difference in output between the two readings must not exceed 2dB.

SPEAKER PHASING

It is essential that the speakers be phased correctly.

If a speaker has to be removed for service, note the lead connections to ensure correct phasing when reconnecting.

A method used for checking the phasing of the speakers is detailed in the following paragraphs.

1. Play a monophonic record.

2. To conduct the following test the listener should be located at a position four feet away in front of the centre of the cabinet.

3. If the phasing is correct the reproduced sound will appear to be radiated from a point near the centre of cabinet front.

4. With incorrect phasing the quality of reproduction will be poor, it will appear to be lacking in bass response and will appear to be radiated from both ends of the Cabinet.

5. If the speakers are incorrectly phased, reverse the leads connected to the voice coil terminals of one of the speakers then repeat the test detailed above.

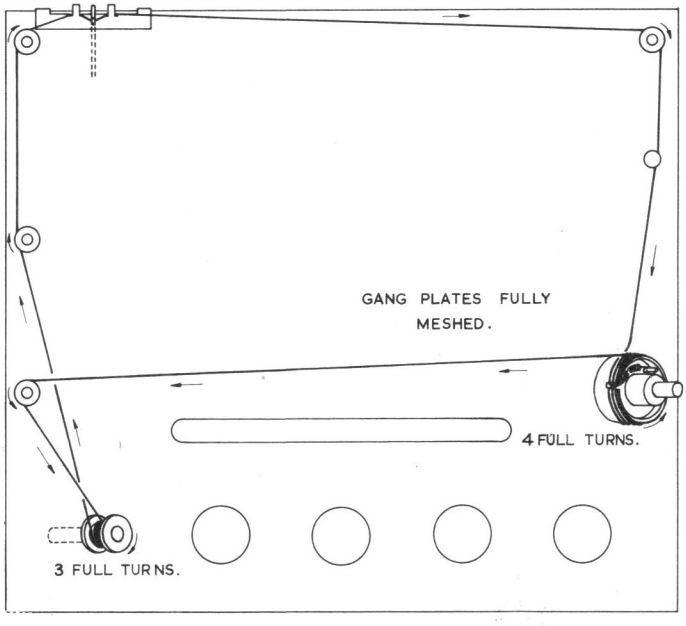

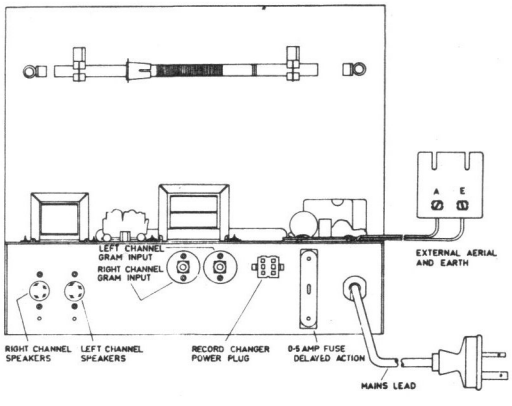

CIRC. NO.	VALUE	CAPACITORS DESCRIPTION	TOL ±	RATING V.DCW.	PART NUMBER
1.	3-30pF	Trimmer - air			4000-025-02
2		Two gang-tuning			4000-042-01
3	3-30pF	Trimmer - air			4000-025-02
4	.01uF	Polyester	10%	160	4009-014-17
5	.01uF	Polyester	10%	160	4009-014-17
6	.001uF	Polyester	10%	400	4009-010-07
7	.001uF	Polyester	10%	400	4009-010-07
8	.047uF	Disc Ceramic		25	4008-057-04
9	1000uF	Electrolytic		25	4005-025-06
10	.22uF	Polyester	10%	160	4009-007-14
11	1000uF	Electrolytic		25	4005-025-06
12	.01uF	Polyester	10%	630	4009-014-19
13	.001uF	Polyester	10%	400	4009-010-07
14	.001uF	Polyester	10%	400	4009-010-07
15	.001uF	Polyester	10%	400	4009-010-07
16	.001uF	Polyester	10%	400	4009-010-07

CIRC. NO.	VALUE OHMS	RESISTORS DESCRIPTION	TOL ±	RATING WATTS	PART NUMBER
17	1.5M	Carbon	10%	.5	4022-046-01
18	100K	Carbon	10%	.5	4022-013-02
19	1.5M	Carbon	10%	.5	4022-046-01
20					
21	100K	Carbon	10%	.5	4022-013-02
22	2M	Volume Control tapped at 900K ohm			4034-008-02
23					
24	47K	Carbon	10%	.5	4022-051-03
25	5M	Tone Control			4034-009-02
26	47K	Carbon	10%	.5	4022-051-03
27					
28	2M	Balance Control			4032-009-09
29	330	Carbon	10%	.5	4022-011-01
30					
31					
32					
33					
34					
35					
36					

CIRC. NO.	MISCELLANEOUS	PART NUMBER
37	Diode - type AD100	4127-042-01
38	Diode - type AD100	4127-042-01
39	Socket - "DIN" tape and aux. input and output.	7222-141-01
40		
41	Socket - pick-up input	7222-140-01
42	Socket - pick-up input	7222-140-01
43	Loading Coil	4036-051-01
44	Rod Aerial	4074-064-01
45	Switch - function	4059-203-01
46	R.F. Module - refer separate list	4067-002-01
47	Audio Module - refer separate list	4067-007-01
48	Audio Module - refer separate list	4067-007-01
49	Filter Choke	4048-053-01
50	Lamp - 12V. 1.2W - dial illum.	4068-003-06
51	Lamp - 12V. 1.2W - dial illum.	4068-003-06
52	Lamp - 12V. 1.2W - Power "ON"	4068-003-06
53	Socket - 4 pin, speaker	7222-052-01
54	Socket - 4 pin, speaker	7222-052-01
55	Power Transformer	4041-056-01
56	Plug - 4 pin speaker	7171-024-01
57	Plug - 4 pin speaker	7171-024-01
58	Plug - 3 pin, less contacts - motor unit	7171-114-01
59	Record Changer 4 speed, 200-250 volt 50 cps, Garrard Model 1000 Sonotone 9TA ceramic cartridge Stylus - " stereo" diamond "78" sapphire	4060-004-01
60	Speaker - 9"x 6" 8 ohm impedance Type C96LX00/68/8	4056-004-22
62	Speaker - 9"x 6" 8 ohm impedance Type C96LX00/68/8	4056-004-22
63	Fuse - 500mA delayed action	4071-002-01
64	Socket - 3 pin less contacts -motor unit	7222-144-01
65	Mains Lead and Plug Assy	4077-120-04
66	Socket Assy - pick-up outlet -motor unit	7222-140-02
67	Plug (4) interconnecting leads, pick-up	7171-110-01
68	Terminal Board - external aerial and earth requires: Plate Terminal (2) Screw (2) special	 7169-426-01 7244-009-01 7198-909-01

PART NUMBER	MECHANICAL
7166-007-01	Pillar (2) rod aerial mount
7225-078-01	Clip (2) rod aerial mount
7279-005-02	Nut Plate (2) rod aerial mount pillar
7222-115-01	Socket (3) lamps
7055-291-51	Clip (3) lamp sockets
7106-032-01	Grommet (4) gang mount
7031-017-01	Bush (4) gang mount
7196-067-03	Screw (4) 5/16"x 4BA C/SK Hd.gang mount
7077-034-01	Dial Drum
7198-801-02	Grub screw (2) 3/16" x ⅛" Whit. dial drum
7225-129-01	Spring (2) dial cord and pointer guide
7174-015-01	Pulley (4) dial cord
7055-250-01	Clip (4) dial cord pulley
7262-024-01	Washer (5) ⅜" Int.S/P. - controls
7150-057-01	Nut (5) ⅜" U.N.F. - controls
7293-100-01	Spacer (2) "DIN" socket
7065-203-01	Cover (1) mains switch
7173-070-01	Dial Pointer
7215-098-01	Shield (1) controls
7120-029-02	Grommet (3) leads
7169-558-01	Fuse Holder
7065-206-01	Cover-fuse holder
7345-006-01	Anchor-mains cord
7231-122-01	Terminal strip (1) 8 lug - 1E4E1
7231-203-01	Terminal strip (1) 5 lug - 2E2
7231-083-01	Terminal strip (1) 10 lug - E7E1
7231-105-01	Terminal strip (1) 6 lug - 1E4
7060-073-11	Contact (6) Gram power plug
7055-539-01	Clip (2) lead anchor
	Audio Module Mounting - 1st production runs
7293-012-02	Spacer (4) brass
7198-076-12	Screw (4) ⅜" x ⅛" Whit. rd.hd.
7148-302-11	Nut (4) ⅛" Whit.
7262-008-02	Washer (4) shakeproof, ⅛" int.
7120-201-01	Insulator (2) base
	Audio Module Mounting - current production runs
7294-110-01	Spacer (4) moulded
7201-576-06	Screw (4) ½" x No.4 Phillips hd.
7120-201-11	Insulator (2) base.

CABINET STYLING

COLOUR	CABINET PART NUMBER	LEG (4) REQUIRED PART NUMBER
MAPLE	7038-020-01	7130-052-01
WALNUT	7038-020-02	7130-052-02
MAHOGANY	7038-020-03	7130-052-03
TEAK	7038-020-04	7130-052-04

PART NUMBER	MECHANICAL (CABINET ASSEMBLY)
7179-230-05	Rail (1) top of dial
7179-236-02	Rail (1) base of dial
7185-025-02	Retainer (2) base rail
7185-025-03	Retainer (1) base rail
7198-178-22	Screw (3) 5/8"x 3/16" rd.hd., rail retainers
7032-022-01	Light Button (1) power "ON" indicator
7329-006-02	Retainer (1) light button
7150-862-02	Barrel Nut (3)
7261-484-03	Washer (3) chrome
7261-484-03	Washer (3) chrome
7008-340-20	Badge (1) ASTOR
7310-014-01	Nut (2) badge retainer
1033-001-26	Fabric - speaker baffles, 6 sq.ft.
7148-852-01	Dot Tee Nut (4) leg mounting
7112-003-01	Hinge (2) record compartment lid
7201-177-18	Screw (8) 5/8" x No.6 rd.hd. hinges
7159-003-01	Felt Pad (2) lid stop.
	Lid Stay Assembly. - not available complete requires:
7227-002-01	Stay Assy.
7028-183-02	Bracket Housing
7261-001-01	Plastic Washer (2)
7261-230-02	Steel Washer (2)
7225-002-01	Spring
7198-328-02	Screw - tension adjustment
7148-856-02	Dot Tee Nut - lid stay tension adj.
7208-156-21	Screw (2) ¾" x No.4 rd.hd. lid stay to cab.
7208-056-26	Screw (2) ½" x No.4 csk.hd. lid stay to lid.
7265-007-03	Cup Washer (4) motor board
7201-627-25	Screw (4) 7/8" x No.6 Phillips hd, motor board
7070-123-01	Dial
7027-659-02	Bracket (2) chassis rear support.

CHASSIS REMOVAL

1. Disconnect mains lead plug from supply socket then remove rear panel of cabinet.

2. Identify connections then remove plugs from receiver sockets. Remove ext.aerial and earth terminal plate.

3. Remove rotary control knobs and the three barrel nuts.

4. Remove the four screws fastening support brackets to cabinet.

5. Chassis may be lowered and removed from cabinet.

6. Reverse procedure when refitting.

RECORD CHANGER REMOVAL

1. Disconnect mains lead plug from supply socket then remove rear panel of cabinet.

2. Identify connections then remove pick-up lead plugs and the motor mains lead plug from the changer sockets.

3. Screw down the changer transport screws then turn the retainer clips to the vertical position.

4. Changer may be lifted off the cabinet motor board and out of cabinet.

5. Reverse procedure when refitting.

PICK-UP STYLUS PRESSURE ADJUSTMENT

The stylus pressure is to be 4 grammes. A pressure gauge Part No.4121-013-01 is available from the Spare Parts Division.

To check the pressure ensure the unit is level with no record on the turntable. Place pressure gauge on the turntable then lower pick-up arm so that stylus locates into the hollow provided on gauge. Adjust for balance and note reading.

To adjust the pressure move the slider on top of pick-up arm frontwards to decrease and backwards to increase. Recheck with gauge.

AUDIO MODULE PART NO.4067-007-01

CIRCUIT NO.	VALUE	CAPACITORS DESCRIPTION	TOL ±	RATING V.DCW.	PART NUMBER
1	.15uF	Polyester	10	160	4009-020-04
2	10uF	Electrolytic		16	4005-007-19
3	200uF	Electrolytic		10	4005-006-14
4	.0022uF	Polyester	10	400	4009-002-06
5	400uF	Electrolytic		10	4005-042-07
6					
7					
8					

CIRCUIT NO	VALUE	RESISTORS DESCRIPTION	TOL ±	RATING WATTS	PART NUMBER
9	3.3K	Carbon	10%	.5	4022-006-01
10	1.2M	Carbon	5%	.5	4022-064-08
11	2.2M	Carbon	5%	.5	4022-036-02
12	47	Carbon	5%	.5	4022-041-11
13	150K	Carbon	10%	.5	4022-038-01
14	12K	Carbon	10%	.5	4022-029-01
15	820	Carbon	10%	.5	4022-009-01
16	4.7K	Carbon	5%	.5	4022-005-01
17	100	Potentiometer,Quiescent Current Adj.			4025-031-03
18	50	N.T.C.			4021-040-02
19	1	Wire Wound	10%	.5	4024-008-02
20	1	Wire Wound	10%	.5	4024-008-02
21	680	Carbon	10%	.5	4022-028-02
22					
23					
24					

CIRCUIT NO	MISCELLANEOUS	PART NUMBER
25	Transistor - type AT327	4128-125-01
	or Transistor - type SE4002	4128-066-01
26	Transistor - type AX1130	4128-102-02
27	Transistor - type AC187)matched	4128-107-01
28	Transistor - type AC188) pair	

PART NUMBER	MECHANICAL
7111-007-01	Heat Sink (2) output transistors
7167-058-01	Pin (7) board terminations
7120-026-01	Insulator (5) glass, transistor mount
7310-023-11	Nut (1) N.T.C. resistor mount.

R.F. MODULE. Part No. 4067-002-01

Circuit No.	Value	Capacitors Description	Tol. ±	Rating V.DCW	Part Number
1	.01uF	Disc Ceramic		25	4008-039-06
2	.01uF	Disc Ceramic		25	4008-039-06
3	220pF	Polystyrene	5%	100	4004-005-03
4	.022uF	Disc Ceramic		25	4008-010-05
5	10uF	Electrolytic		6	4005-007-12
6	.022uF	Disc Ceramic		25	4008-010-05
7	.022uF	Disc Ceramic		25	4008-010-05
8	220pF	Polystyrene	5%	100	4004-005-03
9	.1uF	Disc Ceramic		25	4008-004-04
10					
11	.1uF	Disc Ceramic		25	4008-004-04
12	.022uF	Disc Ceramic		25	4008-010-05
13	.022uF	Disc Ceramic		25	4008-010-05
14	.022uF	Disc Ceramic		25	4008-010-05
15	100pF	Ceramic	5%	500	4008-006-11
16	220pF	Polystyrene	5%	100	4004-005-03
17	100pF	Ceramic	5%	500	4008-006-11
18	.22uF	Disc Ceramic		25	4008-053-01
19	80uF	Electrolytic		25	4005-030-03
20					
21	100pF	Ceramic		25	4008-006-11
22	.01uF	Disc Ceramic		25	4008-039-06
23					
24					

Circuit No.	Value Ohms	Resistors Description	Tol. ±	Rating Watts	Part Number
25					
26	47K	Carbon	10%	½	4022-051-03
27	10K	Carbon	10%	½	4022-004-01
28	2.7K	Carbon	10%	½	4022-043-01
29	120K	Carbon	10%	½	4022-031-01
30	10K	Carbon	10%	½	4022-004-01
31	560	Carbon	10%	½	4022-010-01
32	1K	Carbon	10%	½	4022-008-01
33	10K	Carbon	10%	½	4022-004-01
34	100K	Carbon	10%	½	4022-013-02
35	1K	Carbon	10%	½	4022-008-01
36					
37	2.2K	Carbon	10%	½	4022-021-02
38	4.7K	Carbon	10%	½	4022-005-01
39	33K	Carbon	10%	½	4022-059-03
40					
41	68	Carbon	10%	½	4022-024-01
42	820	Carbon	10%	½	4022-009-01
43	1K	Carbon	10%	½	4022-008-01
44	330K	Carbon	10%	½	4022-047-01
45	150K	Carbon	10%	½	4022-038-01
46	27K	Carbon	10%	½	4022-073-01
47					
48					
49					

Circuit No.	Miscellaneous	Part Number
50		
51	Transistor - type AT319 - Mixer/osc.	4128-118-01
52	Diode-type 1N295 - overload	4127-001-01
53	Transistor - type AT319 - I.F.Amp.	4128-118-01
54	Transistor - type AT319 - I.F.Amp.	4128-118-01
55	Diode - type 1N295 - A.G.C.	4127-001-01
56	Diode - type AA119 - Detector	4127-037-01
57	Osc. Coil	4043-064-01
58	No.1 I.F. Transformer, orange/green,455 Kc/s	4044-031-01
59	No.2 I.F. Transformer, orange/blue, 455 Kc/s	4044-031-02
60		
61	No.3 I.F. Transformer, orange/violet,455 Kc/s	4044-031-03

Mechanical

Part Number	Description
7167-058-01	Pin (6) Circuit Board Terminations
7120-026-01	Insulator (12) glass, transistor mount

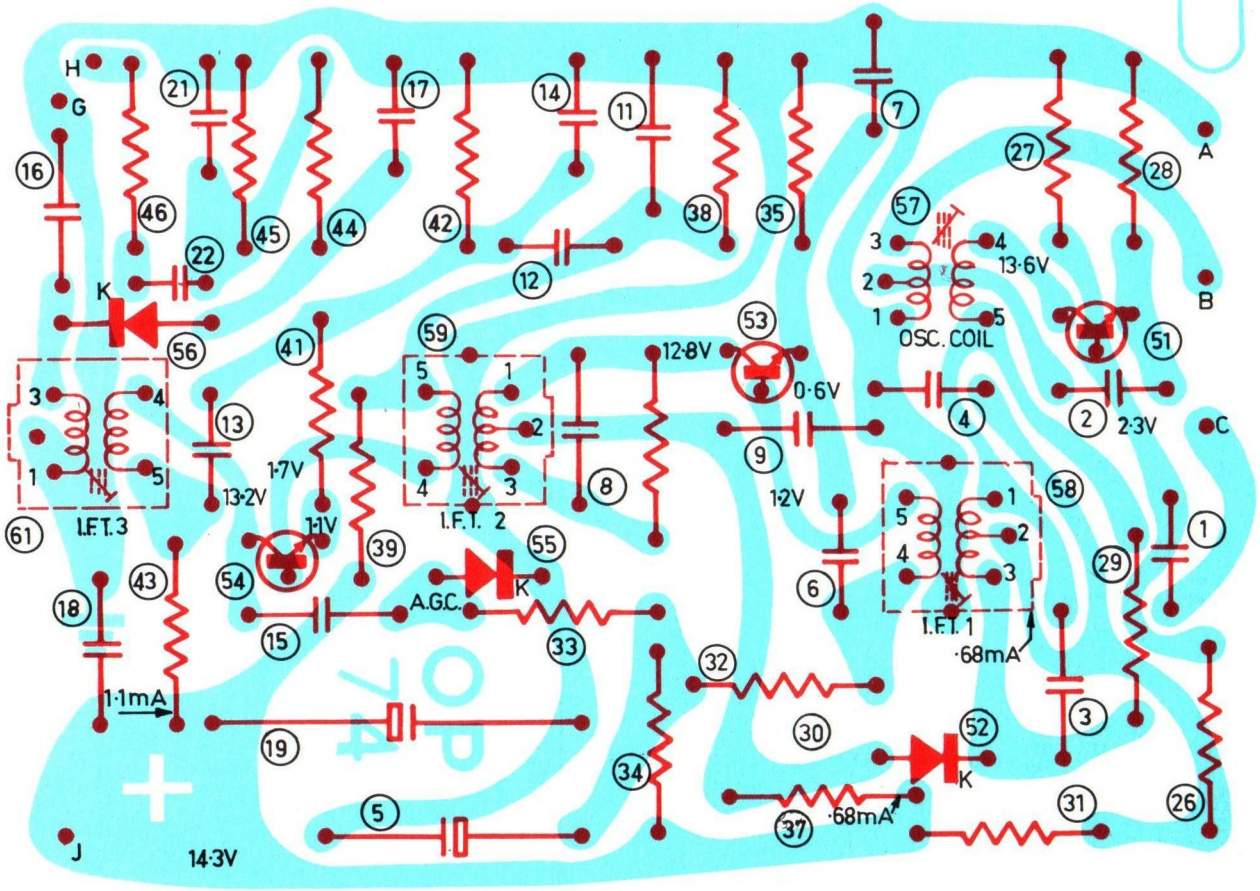

DRAWN	DATE	CH'ED.	APP'D.	DATE
K.J.D.	3.7.67.	G.L.	W.M.	15-7-67

ISSUE 2

PB1546A