PHILIPS Service notes

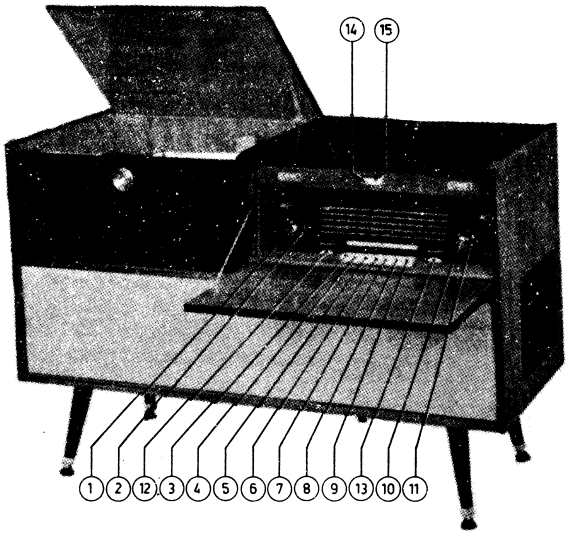

MODEL F7X95A

SPECIFICATIONS

Power Supply		90,110,127,145,190,240V,50c/s
PPower Consumption		Approximately 105W
Tuning Ranges		See "Knob Functions"
Intermediate Frequency		452 kc/s
Record Changer		AG 1024
Loudspeakers	(800)	AD3700AM (2)
	(800)	AD3690A (2)
Extension Speaker	(800)	AD3500AMS (2) (Optional extra)

KNOB FUNCTIONS

Refer annotated photograph above

1. Volume control
2. Balance control
3. Mains switch
4. P/U switch
5. 1622 kc/s - 517 kc/s B/C
6. 5.1 Mc/s - 1.6 Mc/s SW4
7. 12 Mc/s - 5 Mc/s SW3
8. 17.9 Mc/s - 11.7 Mc/s SW2
9. 26.2 Mc/s - 17.7 Mc/s SW1
10. Tuning control
11. Bandspread tuning control
12. Bass control
13. Treble control
14. Stereo position
15. Mono. position

VALVE EQUIPMENT AND FUNCTIONS

Circuit No.	Type	Function
B1	EF89(6DA6)	R.F. Amplifier
B2	ECH81(6AJ8)	Frequency Converter
B3	EBF89(6DC8)	I.F. Amplifier, Demodulator and A.V.C.
B4	ECC83(12AX7)	Audio Amplifiers
B5	EL84(6BQ5)	Power Amplifier
B6	EM84(6FG6)	Tuning Indicator
B7	ECC83(12AX7)	Audio Amplifiers
B8	EL84(6BQ5)	Power Amplifier
B9	EZ81(6CA4)	Rectifier
L1 - 4	8024N	6.3V, 0.3A tubular B/C lamp

MAY 1962 — PUBLISHED BY PHILIPS ELECTRICAL INDUSTRIES PTY. LTD.
SYDNEY — MELBOURNE — BRISBANE — ADELAIDE — PERTH — HOBART — CANBERRA
NEWCASTLE — WOLLONGONG

ALIGNMENT

Three trimming marks are indicated on the dial scale as small triangles. They are numbered 1 to 3 starting from the H.F. end.

The various trimming point locations are shown on the layout drawing below.

If the trimming point entry in the table below carries an asterisk, it indicates that the signal is applied to the signal grid of B1 (R.F. amp) through a 0.03 F capacitor. If no asterisk is shown, the signal is applied to the aerial input.

The core of the short wave bandspread coil should be adjusted according to the drawing below, i.e., 1.5m.m. out, when the bandspread knob 11 is turned clockwise against the stop.

When trimming short wave ranges SW1, 2 and 3, the bandspread core should be put into the centre position by means of its control knob 11.

BAND	PUSH BUTTON DOWN	CURSOR TO TRIMMING MARK	FREQUENCY	TRIM FOR MAXIMUM OUTPUT
I.F.	5	1	452 kc/s	S28, S27, S25, S26
B/C	5	3 1	550 kc/s 1630 kc/s	S24*, S15/15a*, S10/10a C36*, C24*, C14
SW4	6	3 1	1.72 Mc/s 5.15 Mc/s	S22*, S14/14a*, S9 C35*, C23*, C12
SW3	7	3 1	5.26 Mc/s 12.1 Mc/s	S20b*, S13*, S7 C62*, C51*, C7
SW2	8	3 1	11.75 Mc/s 18.0 Mc/s	S19*, S12/12a*, S5 C40*, C21*, C66
SW1	9	3 1	17.8 Mc/s 26.4 Mc/s	S17*, S11/11a*, S6 C39*, C20*, C8

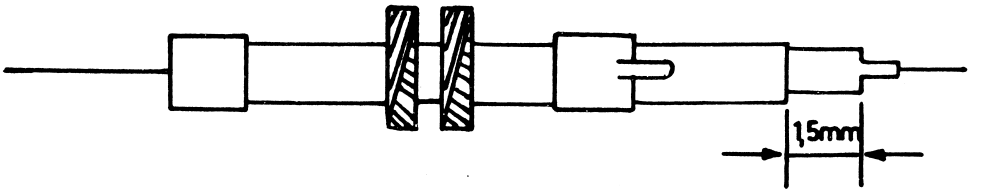

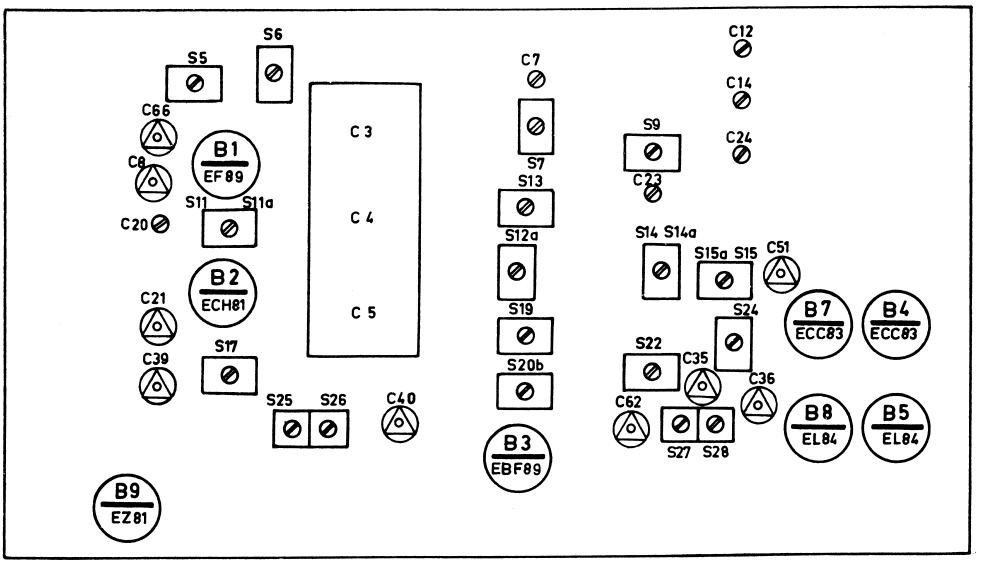

CAPACITORS

C No.	DESCRIPTION	VOLTS W	TOL. ± %	CODE NO.
1)	2x50 µF dual	300		912/L50+50
1a)	electrolytic			
2)	2x50 µF dual	300		912/L50+50
2a)	electrolytic			
3,4,5	Tuning capacitor			49.001.97
7	22pF ceramic trimmer			908/22E
8	30pF air trimmer			908/30E
9	27pF ceramic		2	904/27E
10	10pF polystyrene foil		2½	905/D10E
11	47pF ceramic		2	904/47E
12	22pF ceramic trimmer			908/22E
13	3nF mica	500	1	905/3K
14	22pF ceramic trimmer			908/22E
15	100pF ceramic		2	904/100E
16	10nF ceramic		-20+50	904/10K
17	106pF polystyrene foil		2½	905/D106E
18	150pF ceramic		2	904/150E
19	0.01 µF Polyester	125	10	C.296.AA/A10K
20	22pF ceramic trimmer			908/22E
21	30pF air trimmer			908/30E
22	3nF mica		1	905/3K
23	22pF ceramic trimmer			908/22E
24	22pF ceramic trimmer			908/22E
25	47pF ceramic		2	904/47E
26	106pF polystyrene foil		2½	905/D106E
27	100pF ceramic		2	904/100E
28	390pF ceramic		2	904/390E
29	68pF ceramic		2	904/68E
30	120pF mica		1	905/120E
31	0.01 µF Polyester	400	10	C.296.AC/A10K
32	82pF ceramic		2	904/82E
33	455pF mica		1	905/455E
34	39pF mica		1pF	905/39E
35	30pF air trimmer			908/30E
36	30pF air trimmer			908/30E
37)	Part of 1st I.F.T.			
38)				
39	30pF air trimmer			908/30E
40	30pF air trimmer			908/30E
42	1.5nF ceramic		-20+50	905/1K5
43 }	Part of 2nd I.F.T.			
44 }				
45	100pF ceramic		2	904/100E
46	3.3nF ceramic		-20+50	904/3K3
49	2.7pF ceramic		5	904/2E7
50	5.6nF Polyester	400	10	C.296.AC/A5K6
51	30pF air trimmer			908/30E
52	15pF ceramic		5	904/15E
60	12pF ceramic		.5pF	904/12E
61	4.7pF ceramic		.5pF	904/4E7
62	30pF air trimmer			908/30E
63	2.1nF polystyrene foil		2½	905/D2K1
66	30pF air trimmer			908/30E
67	10pF ceramic		.5pF	904/10E
72	0.01 µF Polyester	400	10	C.296.AC/A10K
73	0.01 µF Polyester	400	10	C.296.AC/A10K
74	220pF ceramic		2	904/220E
75	0.033 µF Polyester	400	10	C.296.AC/A33K
76	0.033 µF Polyester	400	10	C.296.AC/A33k
80	0.022 µF Polyester	125	10	C.296.AA/A22K
81	100 µF electrolytic	4		C.425.AL/B100
82	0.01 µF Polyester	400	10	C.296.AC/A10K
83	1nF Polyester	400	10	C.296.AC/A1K
84	2.2nF Polyester	400	10	C.296.AC/A2K2
85	1.8nF Polyester	400	10	C.296.AC/A1K8
86	1.2nF Polyester	400	10	C.296.AC/A1K2
87	0.022 µF Polyester	400	10	C.296.AC/A22K
88	4.7nF Polyester	400	10	C.296.AC/A4K7
89	0.082 µF Polyester	125	10	C.296.AA/A82K
90	100 µF electrolytic	16		C.426.AE/E100
91	1nF paper	1000		906/V1K
93	47pF ceramic		2	904/47E
94	47pF ceramic		2	904/47E
100	0.022 µF Polyester	125	10	C.296.AA/A22K
101	100 µF electrolytic	4		C.425.AL/B100
102	0.01 µF Polyester	400	10	C.296.AC/A10K
103	1nF Polyester	400	10	C.296.AC/A1K
104	2.2nF Polyester	400	10	C.296.AC/A2K2

CAPACITORS

C No.	DESCRIPTION	VOLTS W	TOL. ± %	CODE NO.
105	1.8nF Polyester	400	10	C.296.AC/A1K8
106	1.2nF Polyester	400	10	C.296.AC/A1K2
107	0.022 µF Polyester	400	10	C.296.AC/A22K
108	4.7nF Polyester	400	10	C.296.AC/A4K7
109	0.082 µF Polyester	125	10	C.296.AA/A82K
110	100 µF electrolytic	16		C.426.AE/E100
111	1nF paper	1000		906/V1K
112	47pF ceramic		2	904/47E
113	47pF ceramic		2	904/47E
114	220pF ceramic		2	904/220E
115	220pF ceramic		2	904/220E
120	0.022 µF ceramic		-20+50	904/22K

NOTE: nF = nanofarad i.e. 10^{-9} farad

RESISTORS

R No.	DESCRIPTION	WATTS	TOL. ± %	CODE NO.
1	390Ω w/w (3 in parl.)	2	10	E.001.AK/A390E
2	120Ω w/w	2	10	E.001.AK/A120E
3	1 MΩ cracked carbon	1	10	B8.305.07A/1M
4	100kΩ cracked carbon	1	10	B8.305.07A/100K
5	22KΩ cracked carbon	1	10	B8.305.07A/22K
6	150Ω cracked carbon	1	10	B8.305.07A/150E
7	1 MΩ cracked carbon	1	10	B8.305.07A.1M
8	39kΩ cracked carbon	2	10	B8.305.08A/39K
9	47kΩ cracked carbon	1	10	B8.305.07A/47K
10	33kΩ cracked carbon	1	10	B8.305.07A/33K
11	15MΩ carbon	1	10	900/15M
12	390kΩ cracked carbon	1	10	B8.305.07A/390K
13	270kΩ cracked carbon	½	10	B8.305.06A/270K
14	1,500Ω w/w	2	10	E.001.AK/A1K5
15	1,500Ω w/w	2	10	E.001.AK/A1K5
16	3,300Ω cracked carbon	½	10	B8.305.06A/3K3
18	100kΩ cracked carbon	1	10	B8.305.07A/100K
19	82kΩ cracked carbon	1	10	B8.305.07A/82K
20	470kΩ cracked carbon	1	10	B8.305.07A/470K
21	10Ω cracked carbon	1	10	B8.305.07A/10E
22	2.7MΩ cracked carbon	1	10	B8.305.07A/2M7
23	1.5MΩ cracked carbon	1	10	B8.305.07A/1M5
24)	1MΩ carbon potentiometer			
25)	dual ganged (balance)			B1.638.26
26	47kΩ cracked carbon	½	10	B8.305.06A/47K
27	330kΩ cracked carbon	½	10	B8.305.06A/330K
28	330kΩ cracked carbon	½	10	B8.305.06A/330K
29	47kΩ cracked carbon	½	10	B8.305.06A/47K
30	27kΩ cracked carbon	1	10	B8.305.07A/27K
31	68kΩ cracked carbon	1	10	B8.305.07A/68K
32	330kΩ cracked carbon	1	10	B8.305.07A/330K
33	1,500Ω cracked carbon	1	10	B8.305.07A/1K5
34	18Ω cracked carbon	1	10	B8.305.07A/18E
35	1,500kΩ w/w	½	10	E.001.AD/A1K5
50	100Ω cracked carbon	½	10	B8.305.06A/100E
80	22kΩ cracked carbon	½	10	B8.305.06A/22K
81)	1MΩ carbon potentiometer,			
82)	tapped 200k , dual			
111)	ganged (volume)			E.091.AG/00B17
112)				
83	100kΩ cracked carbon	½	10	B8.305.06A/100K
84	100kΩ cracked carbon	½	10	B8.305.06A/100K
85	560kΩ cracked carbon	½	10	B8.305.06A/560K
86	1,000Ω cracked carbon	½	10	B8.305.06A/1K
87	470kΩ cracked carbon	½	10	B8.305.06A/470K
88	470kΩ cracked carbon	½	10	B8.305.06A/470K
89)	2MΩ carbon potentiometer			
119)	dual ganged (bass)			E.091.AG/00B19
90	680kΩ cracked carbon	½	10	B8.305.06A/680K
91	270kΩ cracked carbon	½	10	B8.305.06A/270K
92	220kΩ cracked carbon	½	10	B8.305.06A/220K
93	10kΩ cracked carbon	½	10	B8.305.06A/10K
94	47kΩ cracked carbon	½	10	B8.305.06A/47K
95)	1MΩ carbon potentiometer,			
96)	tapped 200k dual			
125)	ganged (treble)			E.091.AG/00B17
126)				

RESISTORS

R No.	DESCRIPTION	WATTS	TOL. ± %	CODE NO.
97	680kΩ cracked carbon	½	10	B8.305.06A/680K
98	1,000Ω cracked carbon	½	10	B8.305.06A/1K
99	680kΩ Cracked carbon	½	10	B8.305.06A/680K
100	180Ω w/w	1	10	E.001.AG/A180E
101	2,200Ω w/w	1	10	E.001AG/A2K2
102	10kΩ cracked carbon	1	10	B8.305.07A/10K
103	2.2MΩ cracked carbon	½	10	B8.305.06A/2M2
104	100kΩ cracked carbon	½	10	B8.305.06A/100K
105	470kΩ cracked carbon	½	10	B8.305.06A/470K
110	22kΩ cracked carbon	½	10	B8.305.06A/22K
111)	see R81 - 82			
112)				
113	100kΩ cracked carbon	½	10	B8.305.06A/100K
114	100kΩ cracked carbon	½	10	B8.305.06A/100K
115	560kΩ cracked carbon	½	10	B8.305.06A/560K
116	1,000Ω cracked carbon	½	10	B8.305.06A/1K
117	470kΩ cracked carbon	½	10	B8.305.06A/470K
118	470kΩ cracked carbon	½	10	B8.305.06A/470K
119	see R89			
120	680kΩ cracked carbon	½	10	B8.305.06A/680K
121	270kΩ cracked carbon	½	10	B8.305.06A/270K
122	220kΩ cracked carbon	½	10	B8.305.06A/220K
123	10kΩ cracked carbon	½	10	B8.305.06A/10K
124	47kΩ cracked carbon	½	10	B8.305.06A/47k
125)	See R95 - 96			
126)				
127	680kΩ cracked carbon	½	10	B8.305.06A/680K
128	1,000Ω cracked carbon	½	10	B8.305.06A/1K
129	680kΩ cracked carbon	½	10	B8.305.06A/680K
130	180Ω w/w	1	10	E.001.AG/A180E
131	2,200Ω w/w	1	10	E.001.AG/A2K2
132	10kΩ cracked carbon	1	10	B8.305.07A/10K
133	2.2MΩ cracked carbon	½	10	B8.305.06A/2M2
134	100kΩ cracked carbon	½	10	B8.305.06A/100K
135	470kΩ cracked carbon	½	10	B8.305.06A/470K
136	3.3MΩ cracked carbon	½	10	B8.305.06A/3M3
137	39kΩ cracked carbon	½	10	B8.305.06A/39K
138	39kΩ cracked carbon	½	10	B8.305.06A/39K
139	10kΩ cracked carbon	1	10	B8.305.07A/10K
140	10kΩ cracked carbon	1	10	B8.305.07A/10K

INDUCTORS

S No.	DESCRIPTION	CODE NO.
1,2,3,) 3a,Z1)	Power Transformer	A3.143.36
5	Aerial Coil SW2	A3.119.41
6	Aerial Coil SW1	924/0.85
7	Aerial Coil SW3	921/10-17M
9	Aerial Coil SW4	924/20
10,10a	Aerial Coil B/C	922/01
11,11a	R.F. Coil SW1	924/0.5
12,12a	R.F. Coil SW2	924/1.25
13	R.F. Coil SW3	924/1.25
14,14a	R.F. Coil SW4	924/20
15,15a	R.F. Coil B/C	A3.125.48
16,17	Oscillator Coil SW1	A3.119.77
18,19	Oscillator Coil SW2	A3.119.51
20	Oscillator Coil SW3	A3.118.45
20a,20b	Oscillator Coil SW3	923/32-60
21,22	Oscillator Coil SW4	923/60-187
23,24	Oscillator Coil B/C	923U/185-590M
25,26,C37,C38	1st I.F.T.	925/452
27,28,C43,C44	2nd I.F.T.	925/452-2
40,41	Bandspread Oscillator Coil	A3.803.27
60	Loading Coil	A3.803.61
51,52,53,54	Output Transformer	A3.154.13
61,62,63,64	Output Transformer	A3.154.13

MECHANICAL PARTS LIST

Description	Code No.
Ball catch for drop flap	A3.411.98
Cabinet handle - fixed ring	A3.687.05
Cabinet handle - hinged ring	A3.686.57
Nut for cabinet handle	A3.715.27
Speaker grille (side of cabinet)	P5.350.55/423/ME
Speaker switch plate	A3.776.43
Mains switch	A3.182.78
Voltage adaptor	A3.228.85
Control knob (1 and 10)	A3.752.19
Control knob (2 and 11)	A3.769.87
Control knob (12 and 13)	P4.077.65/417/VW
Push Button (3 - 9)	A3.417.70
Push button (14)	A3.291.03
Push button (15)	A3.291.04
Plug - extension speaker	978/3x7
Socket - extension speaker	A3.410.65
Cover - mains switch	P5.280.25/287/HA
Pick-up switch	A3.187.62
Gear wheel - balance control	P5.450.07/148
Dial scale	A3.939.83

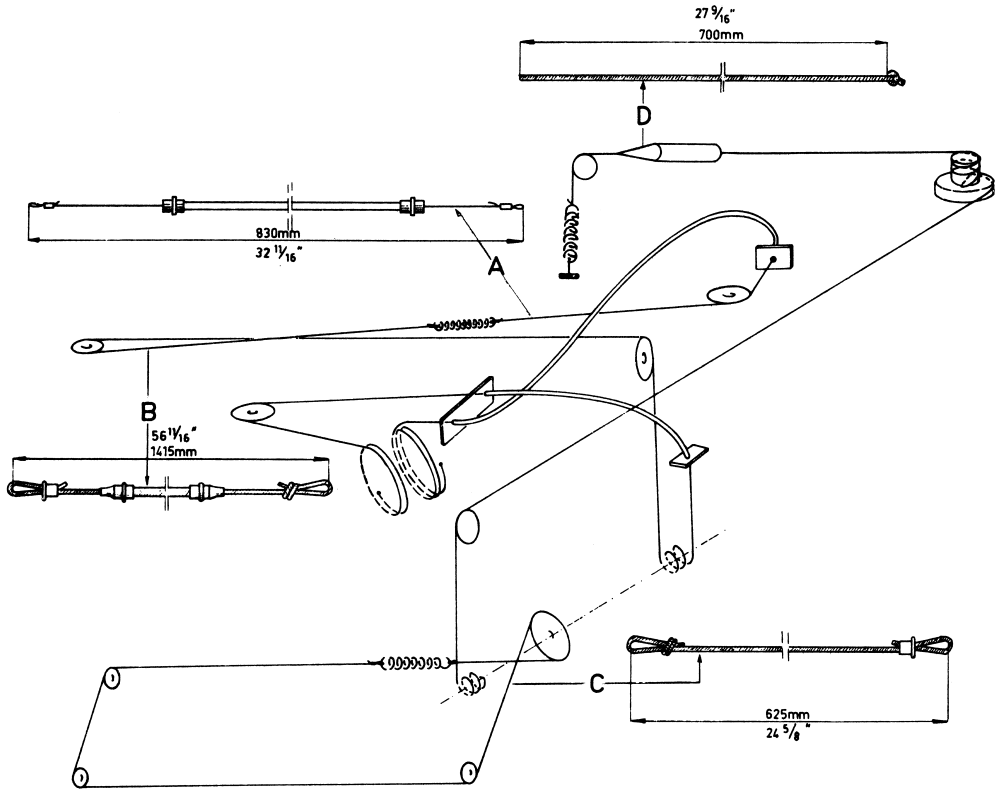

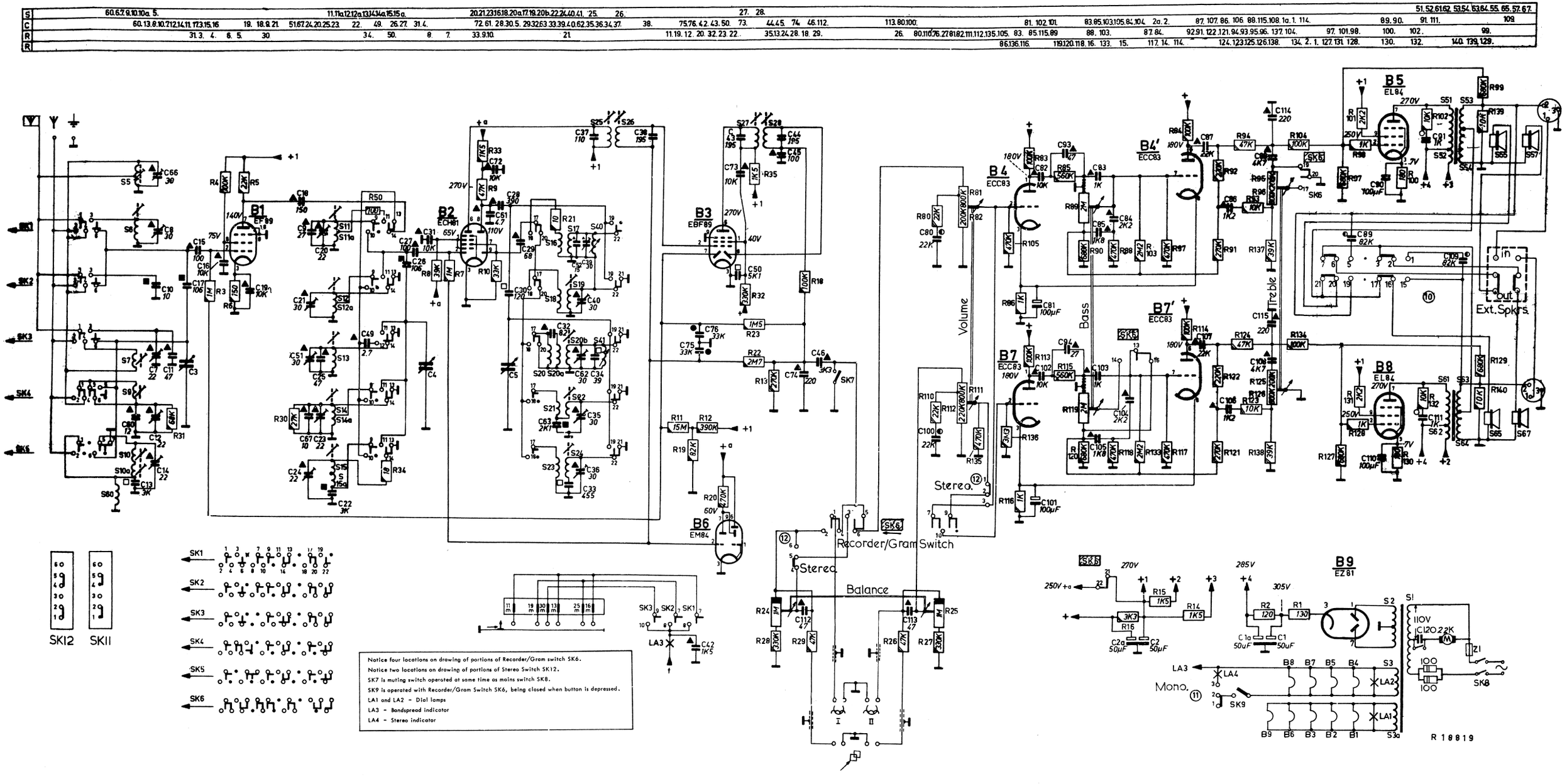
B1 EF89
B2 ECH81
B3 EBF89
B4 ECC83
B4' ECC83
B5 EL84
B6 EM84
B7 ECC83
B7' ECC83
B8 EL84
B9 EZ81
Volume
Bass
Treble
Stereo
Balance
Recorder/Gram Switch
Ext. Spkrs.
in
out
Mono.
SK12
SK11
Notice four locations on drawing of portions of Recorder/Gram switch SK6.
Notice two locations on drawing of portions of Stereo Switch SK12.
SK7 is muting switch operated at same time as mains switch SK8.
SK9 is operated with Recorder/Gram Switch SK6, being closed when button is depressed.
LA1 and LA2 - Dial lamps
LA3 - Bandspread indicator
LA4 - Stereo indicator
R 18819