SANYO

7-Transistor car radio

MODEL F-8220H

SERVICE MANUAL

SANYO ELECTRIC CO., LTD.

INTERNATIONAL DIVISION. : SANYO ELECTRIC TRADING CO., LTD.
OSAKA, JAPAN.

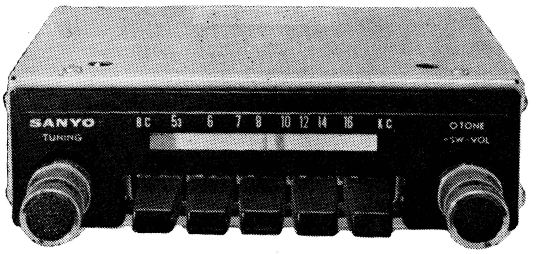

SPECIFICATIONS

CIRCUIT SYSTEM ·····7 transistors plus 2 diodes. Superheterodyne with an RF amplification. Manual tuning and push button tuning.
FREQUENCY RANGE ·····MW 530-1,605 kc
INTERMEDIATE FREQUENCY···455 kc
SENSITIVITY·····10 μV (at 500 mW output)
SIGNAL TO NOISE RATIO···27 dB (at 50 μV signal input)
OUTPUT POWER ·····Undistorted 1.7 W
Maximum 2.8 W
POWER SUPPLY·····12 V
CURRENT DRAIN ·····No signal 150 mA
Maximum 400 mA
LOUDSPEAKER ·····5″×7″ permanent dynamic speaker
Voice coil impedance 8 ohms

TRANSISTORS ·····SE1010 × 1·····RF amp.
2SC573 × 1·····Converter
2SC573 × 1·····IF amp.
2SB186 × 1·····AF amp.
2SB186 × 1·····AF driver
2SB273 × 2·····Power amp.
DIODES·····1S188 × 1·····Detector
1S188 × 1·····AGC
THERMISTOR ·····SDT-02 × 2·····Temp. compensator
DIMENSIONS ·····Width ·····160 mm
Height ····· 50 mm
Depth ·····120 mm
SHAFT SPACING ·····124 mm (Distance between control shafts)
WEIGHT ·····1.2 kg.

ACCESSORIES

Refference Number	Item	Rating	Q'ty
1	Noise suppressor capacitor	R-C4012	1
2	Noise suppressor capacitor	R-C4013	1
3	Spare fuse	R-S1044 (1.2A)	1
4	Mounting bracket	R-113278	1
5	Hex. bolt	5×8 mm	1
6	〃	6×30 mm	1
7	Hex. nut	5 mm	2
8	Spring washer	6 mm	1
9	Spring washer	5 mm	3
10	Plate washer	6 mm	1
11	〃	5 mm	3
12	Speaker	5″×7″ oval type	1

PARTS LIST

Symbol No.	Stock No.	Description	Q'ty
	R-113138b	Chassis-metal case	1
	R-113139a	Escutcheon panel	1
	R-113141b	Cover-metal cover	1
	R-38064a	Dial plate	1
	R-32734	Knob	2
	R-S81501	Knob-assembly	2
	R-113140a	Pointer	1
	R-471556	Specification sheet	1
	R-21031	Heat sink-for power transistor	2
	R-113014	Lead clamp-for antenna lead	1
	R-113142a	Lead clamp-for S.P. and power supply leads	1
	R-423813a	Back screen	1
	R-S6411 (1)	Speaker, 5″×7″ P.D.S. 8 ohms	1
L-2, 3, 4, 5	R-S81505	Tuner	1
L-1	R-W1015b	Choke coil 6μH	1
L-6	R-W1064	Choke coil 5μH	1
T-1	R-W8150	Oscillator coil	1
T-2	R-W5T218	IF transformer primary of 1st stage	1
T-3	R-W5T219	IF transformer secondary of 1st stage	1
T-4	R-W5T259	IF transformer primary of 2nd stage	1
T-5	R-W5T260	IF transformer secondary of 2nd stage	1
CT1	R-C0047a	Trimmer	1
CT3	R-C0028d	Trimmer	1
CT2	R-C0029d	Trimmer	1
L7	R-W6195 (2)	Choke coil	1
T6	R-W6276a	Input transformer	1
C2, 28, 30	R-C7003	Spark capacitor	1
R16, 17	R-R124176	Volume & tone control with Switch	2
R10	R-R11018	Semifixed resistor 250 K ohm	1
	R-S3138a	Speaker lead	1
	R-S3139b	Speaker lead	1
	R-S2156	Antenna receptacle	1
	R-S1194	Pilot lamp	1
	R-S2127b	Pilot lamp socket	1
	R-S1327	Fuse holder	1
	R-S3006	Lug plate	
	R-S3201	Plug with lead-for Magnet antenna power supply	1
Transistor			
Tr-1	SE1010	"Red" or "Blue"	1
Tr-2, 3	2SC537	"D"	2
Tr-4, 5	2SC537	"C"	2
Tr-6, 7	2SB273	"GRN" or "BLUE" for OTL	2
Diode			
D-1, 2	1S188		2
Thermistor			
Th-1, 2	SDT-02		2
Electrolytic capacitor			
C-18, 19	R-C9170	or R-C9060, 10μF 10WV	2
C-27	R-C9171	or R-C9146 200μF 10WV	1
C-23	R-C9145	or R-C9172 100μF 10WV	1
C-22	R-C9162	500μF 10WV	1
C-24	R-C9127a	500μF 15WV	1
C-17	R-C9126	0.1μF 10WV	1

Symbol No.	Description					Q'ty
Fixed resistor						
R-1	Carbon film	10K	ohm	±10%	¼W	1
R-3	〃	56K	〃	〃	〃	1
R-4	〃	1K	〃	〃	〃	1
R-5	〃	5.6K	〃	〃	〃	1
R-6	〃	27K	〃	〃	〃	1
R-7	〃	1.5K	〃	〃	〃	1
R-8	〃	18K	〃	〃	〃	1
R-9	〃	12K	〃	〃	〃	1
R-11	〃	1K	〃	〃	〃	1
R-12	〃	15K	〃	〃	〃	1
R-13	〃	10K	〃	〃	〃	1
R-14	〃	330	〃	〃	〃	1
R-15	Carbon film	220	ohm	±10%	¼W	1
R-21	〃	3.3	〃	〃	〃	1
R-22	〃	56K	〃	〃	〃	1
R-23	〃	1.5K	〃	〃	〃	1
R-24	〃	3.3K	〃	〃	〃	1
R-25	〃	330	〃	〃	〃	1
R-26	〃	10K	〃	〃	〃	1
R-27	〃	470	〃	〃	〃	1
R-29	〃	390	〃	± 5%	〃	1
R-30	〃	390	〃	〃	〃	1
R-31	〃	20	〃	〃	〃	1
R-32	〃	20	〃	〃	〃	1
R-33	Solid	1.5	〃	〃	½W	1
R-34	〃	1.5	〃	〃	〃	1
R-35	Carbon film	560	〃	±10%	¼W	1
Fixed capacitors						
C-1	Mylar	0.01μF	+30−20%	50WV	Square	1
C-3	Ceramic	120pF	±10%	〃	Insulated	1
C-4	Mylar	0.002μF	+30−20%	〃	Square	1
C-5	Mylar	0.01μF	〃	〃	〃	1
C-6	Mylar	0.004μF	〃	〃	〃	1
C-7	Ceramic	60pF	±10%	〃	Disc	1
C-8	Styrol	160pF	〃	125WV	Tubular	1
C-9	Ceramic	4pF	±0.5pF	25WV	Disc	1
C-10	Ceramic	0.04μF	+80−20%	50WV	Disc	1
C-11	〃	〃	〃	〃	〃	1
C-12	〃	2pF	± 0.5pF	〃	〃	1
C-13	〃	100pF	±10%	〃	Insulated	1
C-14	〃	7pF	±0.5pF	25WV	Disc	1
C-15	〃	0.04μF	+80−20%	50WV	Disc	1
C-16	Mylar	0.04μF	+30−20%	50WV	Square	1
C-25	〃	0.01μF	〃	〃	〃	1
C-26	〃	〃	〃	〃	〃	1
C-29	M.P.	0.5μF	±20%	150WV	Tubular	1
C-33	Ceramic	200pF	±10%	250WV	Insulated	1
C-34	〃	30pF	〃	50WV	Disc	1
C-35	〃	500pF	±20%	〃	Disc	1
C-36	Mylar	0.04μF	+30−20%	〃	Square	1

7-20153 Printed in Japan

ANTENNA TRIMMER ADJUSTMENT

With radio installed in car and antenna fully extended, tune in a weak station near 1400 kc and adjust CT-1 for maximum output.

ALIGNMENT PROCEDURES

Check power supply voltage (13.2 V) and ground polarity. Volume control should be at maximum position.

Signal generator output : Modulatin forequency 400 c/s
Percentage modulation 30 %
Signal level just high enough to provide meter deflection.

Signal supply inlet : Antenna receptacle through the dummy.

Output meter connection: Through extention outlet.

STEP	SIGNAL GENERATOR COUPLING	SIGNAL GENERATOR FREQUENCY	RADIO DIAL SETTING	ADJUST FOR MAXIMUM OUTPUT
** IF ALIGNMENT*				
1.	Thru dummy to antenna receptacle.	455 Kc	Low frequency end stop	IF transformer T2, T3, T4, T5
** RF ALIGNMENT*				
2.	Thru dummy to antenna receptacle.	600 Kc	600 Kc	Oscillator coil T1
3.		1400 Kc	1400 Kc	Oscillator trimmer CT3
4.		1400 Kc	1400 Kc	RF Trimmer CT2 Antenna trimmer CT1
5.	Repeat steps 2, 3 and 4.			

NOTE: 1. It is unnecessary to adjust tuner assembly at the points of 600 Kc and 1400 Kc because the assembly is completely line-uped.
2. Alignment is usually to be taken at points of 600 Kc and 1400 Kc, but it may be possible to obtain 530 Kc to 1605 Kc tuning range by adjusting at both lower and upper end of receiving band.

DUMMY ANTENNA ALIGNMENT CONNECTION

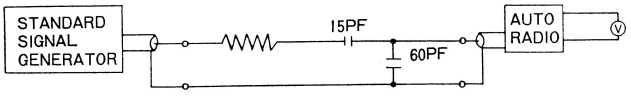

SPEAKER MOUNTING TO VEHICLE FRAME SKETCH

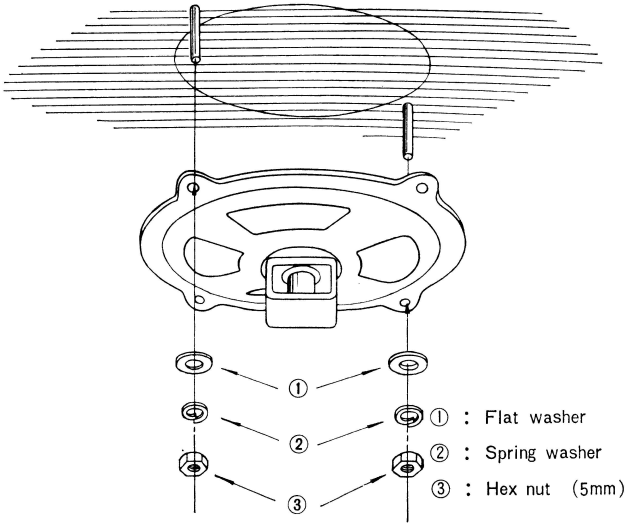

MOUNTING SKETCH

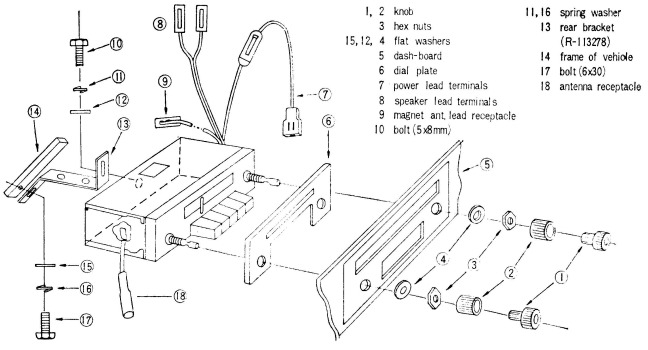

MAIN PARTS LOCATION

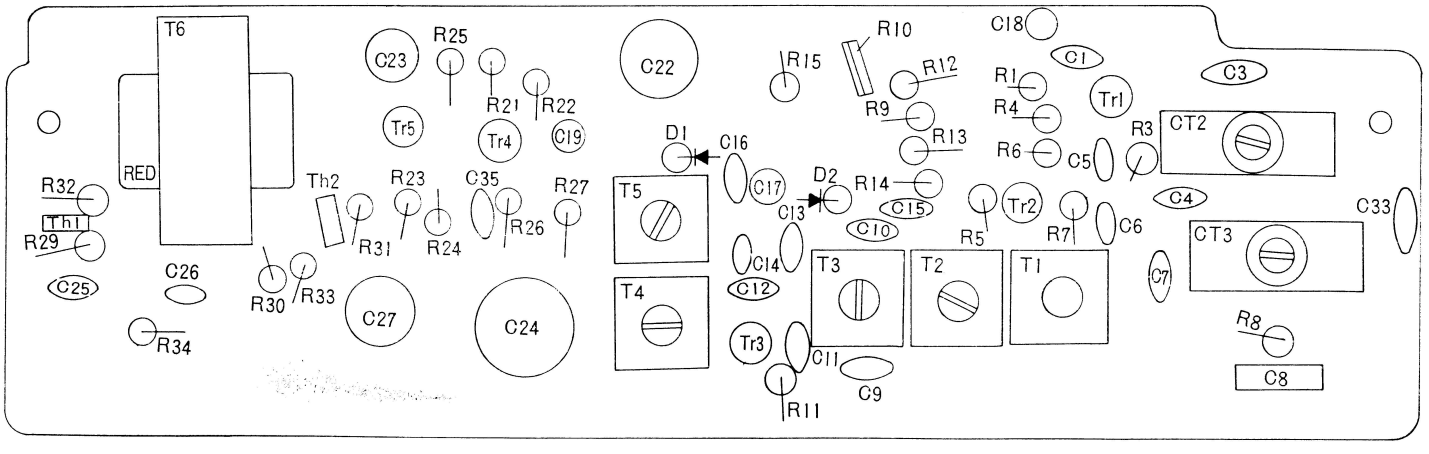

MAIN PARTS IDENTIFICATION

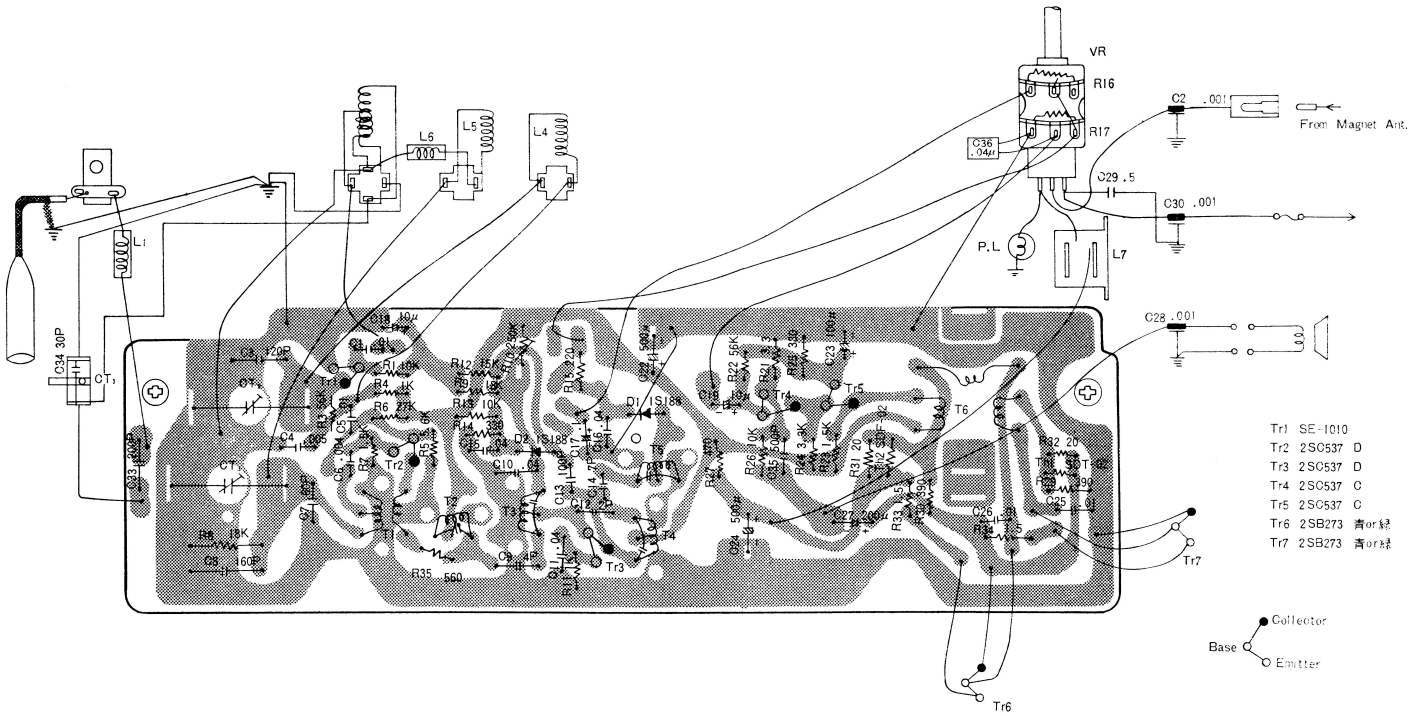
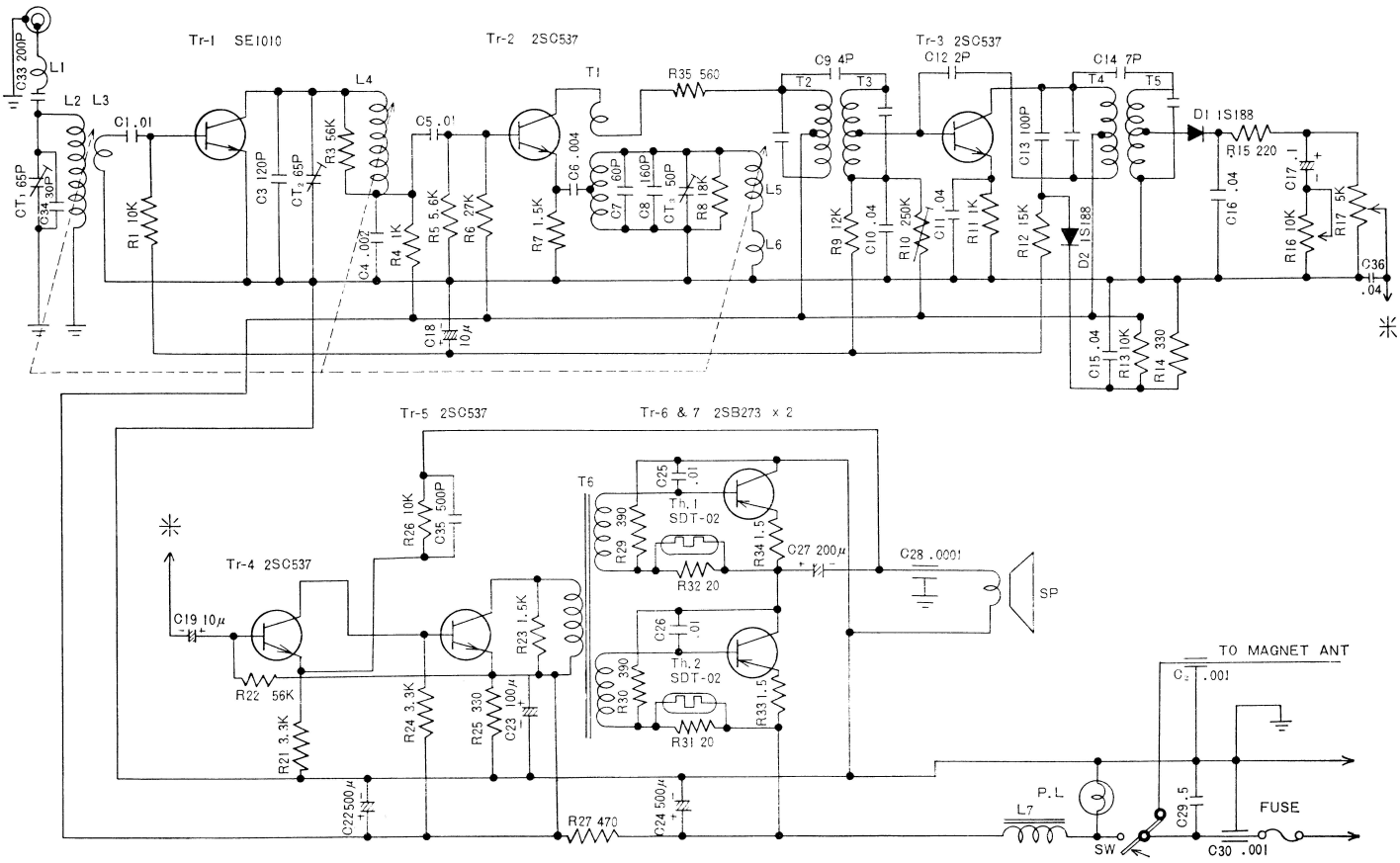
CIRCUIT DIAGRAM