SANYO

Sanyo Sounds Exciting!

Solid State Compact Car Radio

MODEL F-8121

SERVICE MANUAL

SANYO ELECTRIC CO., LTD.

INTERNATIONAL DIVISION : SANYO ELECTRIC TRADING CO., LTD.
OSAKA, JAPAN

SPECIFICATIONS

Circuit System.....7transistor plus 2 diodes super-heterodyne with an RF amplifier and manual tuning
Frequency Range.....535-1605 KHz
Intermediate Frequency.....455 KHz
Sensitivity (for 500mw output)...10μV (12V)
Signal to Noise Ratio.....28dB (at 56μV signal input)
Selectivity.....20dB (at 10KHz off-tuning from 1000KHz)
Output Power.....Undistorted 1.7W (12V)
Maximum 2.8W (12V)
Power Supply.....12V (Reversible ground polarity)
Current Drain.....No signal 130mA (12V)
Maximum 400mA (12V)

Transistors.....2SA322 RF Amplifier
2SA322 Converter
2SA322 IF Amplifier
2SC537×2 Audio Amplifiers
2SB405R×2 Power Amplifier
Diodes.....1S188 Detector
1S188 AGC
Speaker Unit.....5″ permanent dynamic type
8 ohm voice coil impedance
Shaft Space.....130mm (Distance between both control shafts)
Dimensions.....Radio Unit Width 90mm (3½″)
Hight 38mm (1½″)
Depth 100mm (4″)
Weight.....Radio Unit 0.6 kg (1.5 lbs.)
Speaker Unit 1 kg (2.5 lbs.)

CONSTRUCTION

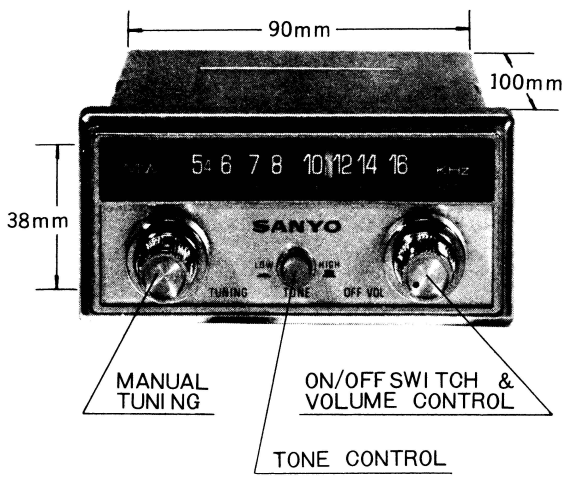

STANDARD ACCESSORIES

PART NO.	DESCRIPTION	Q'TY
R-117362	Speaker Box ISO —enclosure only	1
R-S0721	Speaker 5″ 8 ohms	1
R-112072	Mounting Metal —speaker box mtg	2
	Hex Hd Machine Screw 5×30 ISO	2
	Hex Nut type 5ϕ ISO	2
	Spring Washer 5ϕ	2
	Washer 5ϕ	2
R-111685a	Perforated Mounting Metal	1
R-111663a	Mounting Angle	2
	Hex Hd Machine Screw 6×30 ISO	3
	Hex Nut type-1 6ϕ ISO	3
	Spring Washer 6ϕ	3
	Washer 6ϕ	3
	Hex Hd Machine Screw 5×8 ISO	3
	Spring Washer 5ϕ	3
	Washer 5ϕ	3
R-117187	Trim Plate	1
R-C4005	Noise Suppressor Capacitor	1
R-R7006	Noise Suppressor Resistor	1
R-S1044	Fuse 1.2A	1

PARTS LIST

PART NO.	DESCRIPTION		Q'TY
	HOUSING		
R-117159	Main Housing	ISO	1
R-117160	Top Housing	ISO	1
R-477188	Specification Sheet		1
R-A397073	Front Panel Assembly		1
R-397073a	Front Panel		1
R-267174	Metal Marking	-controls identity	1
R-387013	Dial Scale		1
R-117166	Back Screen	-behind dial scale	1
R-247029	Pointor		1
R-A267184	Tuning Knob		1
R-A267185	Volume Knob		1
R-397076	Knob	-tone control	1
R-44011	Rubber Grommet	-lead restrainer	1
	CHASSIS		
R-S87076	Tuning Shaft		1
R-127013	Spring	-grounding of tuning shaft	1
R-247028	Hex. Nut	-tuning & volume shaft mtg	4
R-117175	Washer	-tuning & volume shaft mtg	4
R-217002	Heat Sink		1
R-24709a	Guide Shaft		1
R-24797a	Guide Shaft		1
R-117161a	Metal Mount	-pilot lamp mtg	1
R-117178	Metal Mount	-antenna lead clamp	1
R-117186	Metal Mount	-tone switch mtg	1
	FASTENERS		
	Bind Head Screw ISO	3x4	13
	Round Head Rivet	2x4	5
	Flat Head Screw	2.6x4 Spark Capacitor	2
	Bind Head Screw	3x16 Speaker	4
	Washer	3.3x10x1t Speaker	4
	Spring Washer	3φ Speaker	4
	Hex. Nut	3φ Speaker	4

SCHEMATIC LOCATION	PART NO.	DESCRIPTION
	SEMICONDUCTORS	
Tr1	2SA322	Transistor (black mark)
Tr2	2SA322 or 2SA101 x-	Transistor (no mark)
Tr3	2SA322	Transistor (green mark)
Tr4 Tr5	2SC537	Transistor (E or F rank)
Tr6 Tr7	2SB405R	Transistor (red, orange, yellow or green)
D1 D2	1S188	Diode
	SDT-02	Thermistor
	CONTROLS	
L2, L5	R-S87077	Tuner Assembly (ISO)
R17	R-R124706	Variable Resistor 5K -volume control
R10	R-R11015	Semi-fixed Resistor 500K B
CT1	R-C0705	Trimmer (ISO)
CT2 CT3	R-C0702	Trimmer
	R-S4728	Push Switch -tone control
	COILS & TRANSFORMERS	
L1 L6	R-W1015d	Choke Coil 6 micro Henries
T1	R-W8709	Oscillator Coil
T2	R-W5T244	IF Transformer
T3	R-W5T245	IF Transformer
T4	R-W5T246	IF Transformer
T5	R-W5T247	IF Transformer
T6	R-W6339	Input Transformer
T7	R-W6707	Choke Coil

SCHEMATIC LOCATION	PART NO.	DESCRIPTION
	MISCELLANEOUS	
C28 C30 C31	R-C7702	Spark Plate Capacitors
	R-S1286	Fuse Holder
	R-S2127b	Pilot Socket
	R-S1194	Pilot Lamp
	R-S1102	Polarity Reverse Plug
	R-S2164	Polarity Reverse Socket
	R-S3138a	Speaker Lead (Female) -on radio unit
	R-S3139b	Speaker Lead (Male)
	ELECTROLYTIC CAPACITORS	
C17	R-C9126 or R-C9710	0.1μF 10V
C18	R-C9131 or R-C9712	5μF 6V
C19	R-C9060	10μF 10V
C22	R-C9162	500μF 10V
C23	R-C9145	100μF 10V
C24	R-C9127a	500μF 15V
C27	R-C9716	200μF 10V
	PACKED CAPACITORS & RESISTORS	
C11 R11	R-CXC707	Packed CR (0.4μF+1K)
C4 C5 R4 R5 R6	R-CXC702	Packed CR (0.002μF+0.01μF+1K+36K +2.7K)
R1 R9 R12	R-CXC703	Packed CR (10K + 12K + 15K)
R13 R14 C15	R-CXC704	Packed CR (330 + 10K + 0.04μF)
	FIXED VALUE CAPACITORS	
C1	R-CQS103Y	Mylar 0.01μF +30%
C2 C16 C37	R-CQS403Y	Mylar 0.04μF +30%
C3	R-CKT151K	Ceramic 150pF ±10% Insulated tubul.
C6	R-CQS402Y	Mylar 0.004μF +30%
C7	R-CKT121K	Ceramic 120pF ±10% Insulated tubul.
C8	R-CST101K	Styrol 100pF ±10%
C9	R-CKD050K	Ceramic 5pF ±0.5pF
C10 C36	R-CKD403Z	Ceramic 0.04μF +80%
C12	R-CKD1N5J	Ceramic 1.5pF ±0.25pF
C13	R-CKT101K	Ceramic 100pF ±10% Insulated tubul.
C14	R-CKD070K	Ceramic 7pF ±0.5pF
C25 C26	R-CKD103M	Ceramic 0.01μF ±20%
C29	R-CMT504M	M. Paper 0.5μF ±20%
C34	R-CKD200K	Ceramic 20pF ±10%
C35	R-CKS201K	Ceramic 200pF ±10%
	FIXED VALUE RESISTORS	
R2	R-R561K	560 ohms
R3	R-R243J	24K ohms ±5%
R7	R-R102K	1K ohms
R8	R-R183K	18K ohms
R15	R-R221K	220 ohms
R21	R-R3N3K	3.3 ohms
R22	R-R563K	56K ohms
R23	R-R152K	1.5K ohms
R24	R-R332K	3.3K ohms
R25	R-R181K	180 ohms
R26	R-R103K	10K ohms
R27	R-R681K	680 ohms
R29 R30	R-R391J	390 ohms ±5%
R31 R32	R-R200J	20 ohms ±5%
R33 R34	R-R1N5J	1.5 ohms ±5% ½W
R36	R-R331K	330 ohms

POLARITY REVERSE

The polarity reversing plug must be positioned correctly before installing your radio or making any electrical connections to the radio.

Set the polarity plug to the positive position if the positive terminal of the battery is grounded to the car.

Set the polarity plug to the negative position if the negative terminal is grounded to the car.

Damage to the radio may result if polarity plug is not positioned correctly before operating.

ANTENNA TRIMMER ADJUSTMENT

With radio installed in car and antenna fully extended, tune in weak station near 1400KHz and adjust CT1 for maximum output.

COLLECTOR CURRENT ADJUSTMENT

With power supply voltage (13.2V) and load (8 ohms) applied, operate the unit without connection of car antenna.
Insert a miliammeter or connect a volt-meter as shown and adjust Semi-fixed Resistor (R10 500K) for 400–450 micro-ampere current circulation thru the collector of Tr1 (2SA322).

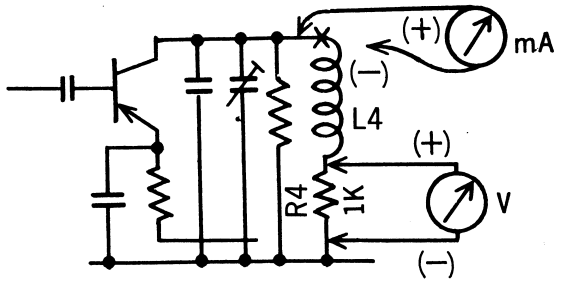

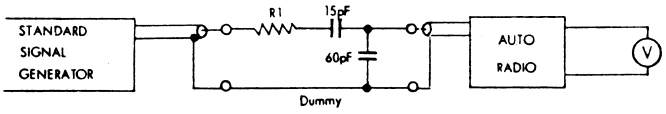

ALIGNMENT PROCEDURES

Check power supply voltage (13.2V) and ground polarity.
Volume control should be at maximum position.

Signal generator output:	Modulation frequency 400 Hz Percentage modulation 30% Signal level just high enough to provide meter deflection.
Signal supply inlet:	Antenna receptacle through the dummy.
Output meter connection:	Through extension outlet

STEP	SIGNAL GENERATOR COUPLING	SIGNAL GENERATOR FREQUENCY	RADIO DIAL SETTING	ADJUST FOR MAXIMUM OUTPUT
IF Alignment				
1.	Thru dummy to antenna receptacle.	455KHz	Low frequency end stop	IF transformer T2, T3, T4, T5,
RF Alignment				
2.	Thru dummy to antenna receptacle.	600KHz	600KHz	Oscillator coil T1
3.		1400KHz	1400KHz	Oscillator trimmer CT3
4.		1400KHz	1400KHz	RF trimmer CT2 Antenna trimmer CT1

*Repeat steps 2, 3 and 4.

NOTE:
1. It is unnecessary to adjust tuner assembly at the points of 600 KHz and 1400 KHz because the assembly is completely line-uped.
2. Alignment is usually to be taken at points of 600 KHz ank 1400 KHz, but it may be possible to obtain 530 KHz to 1605 KHz tuning range by adjusting at both lower and upper end of receiving band.

ELECTRIC PARTS IDENTIFICATION

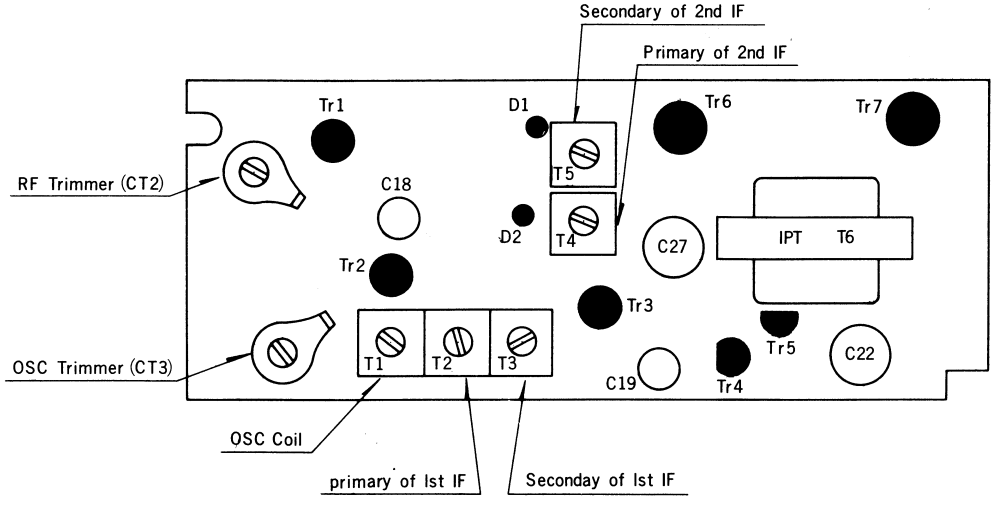

SCHEMATIC DIAGRAMS

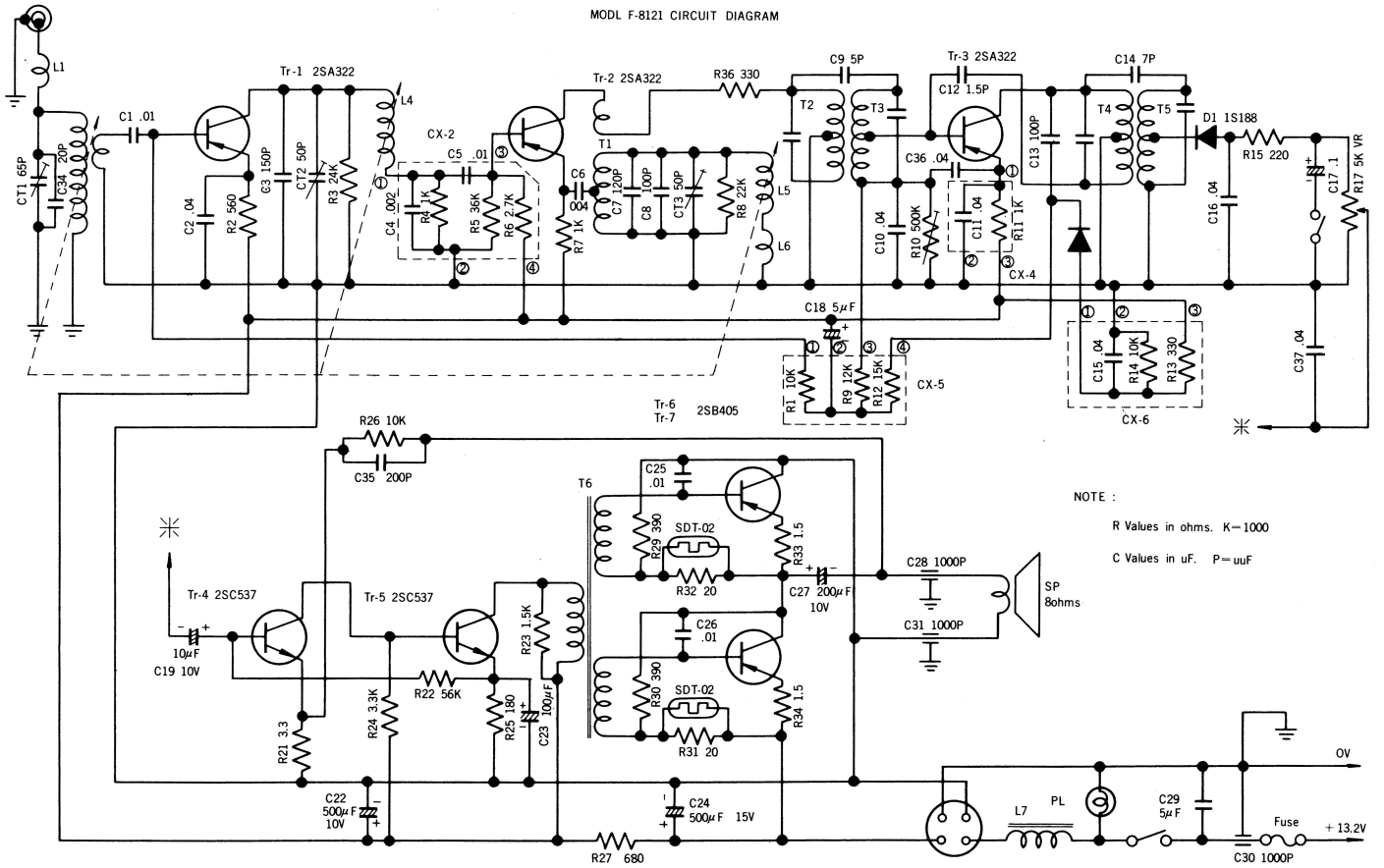
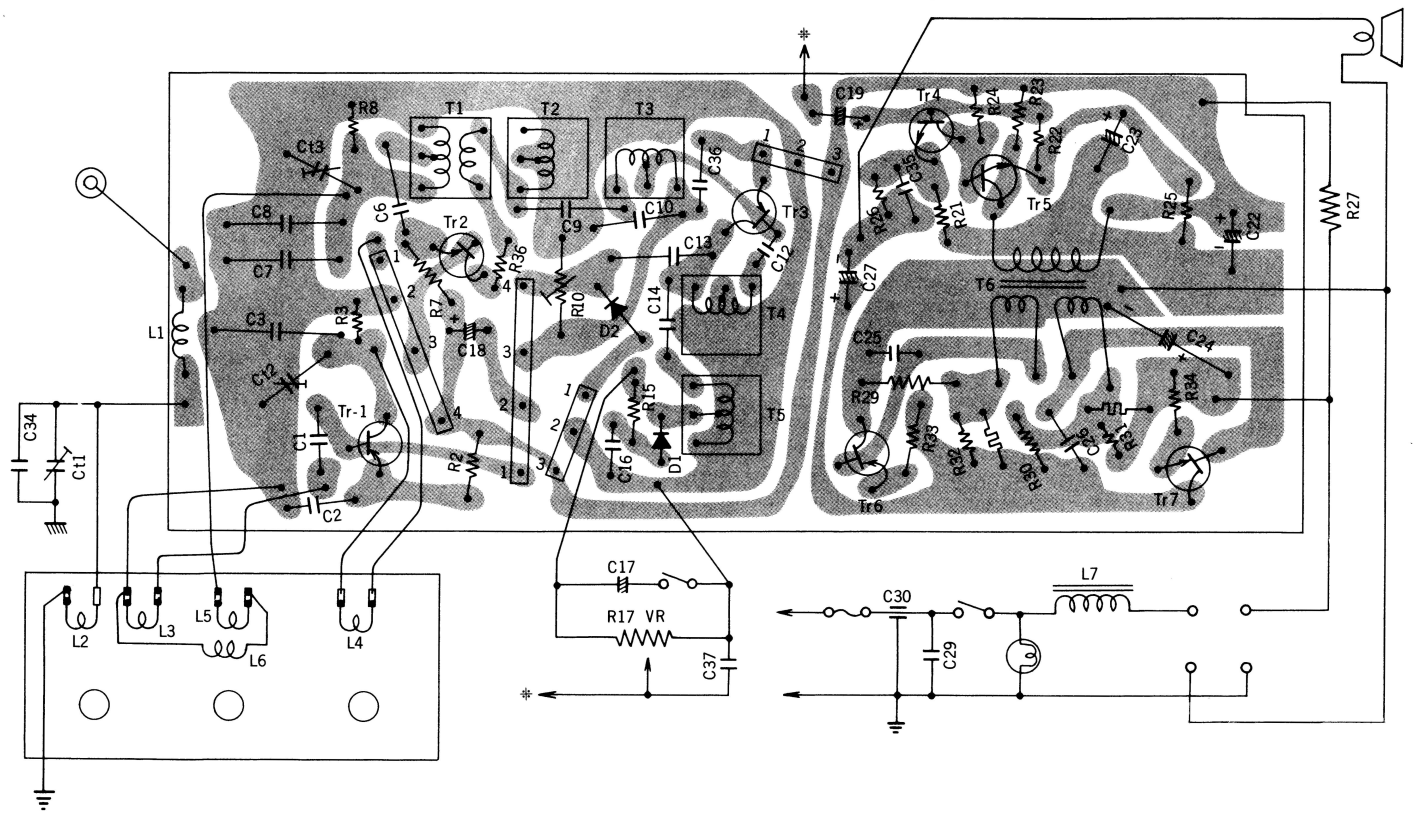
INTER-PARTS WIRING