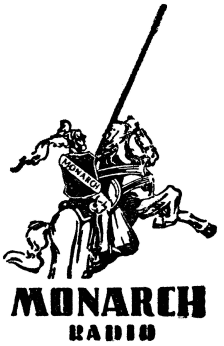

ECLIPSE RADIO PTY. LTD.

(A DIVISION OF ELECTRONIC INDUSTRIES LTD.)

11-21 STURT STREET, SOUTH MELBOURNE

TECHNICAL BULLETIN

BULLETIN DJJ-1 **File : Receivers AC.** **Date : 1/4/48**

SUBJECT:-Model DJJ

4 Tube Superheterodyne Broadcast Receiver Mantel Model.

For operation from:
200-260 volt A.C. Mains.

This Bulletin Contains:

1. Technical Specifications.
2. General Description.
3. Alignment Instructions.
4. Voltage Table.
5. Circuit Diagram.
6. Component Parts List.
7. Coil and IF. Transformer Connections.

ECLIPSE RADIO PTY. LTD.

(A DIVISION OF ELECTRONIC INDUSTRIES LTD.)

11-21 STURT STREET, SOUTH MELBOURNE

TECHNICAL BULLETIN

BULLETIN DJJ-1 **File : Receivers AC.** **Date : 1/4/48**

SUBJECT:- Technical Specifications - Receiver Type DJJ

Tube Complement:

Type 6A8G Converter.
Type 6B8G I.F. Amplifier; A.V.C., Detector, 1st Audio.
Type 6V6GT/G Beam Power Amplifier.
Type 5Y3G/T Full Wave Rectifier.

Intermediate Frequency: 455 Kc/s.

Tuning Range: 535 Kc/s. - 1640 Kc/s.
565 Metres-182.9 Metres.

Dial Reading: Straight line frequency calibration, vertical reading.

Power Consumption: 50 watts (Approx.).

General Description:

The model DJJ receiver is a 4 tube Broadcast superheterodyne designed for operation from 200-250 volt, 50 cycle A.C. Mains, and when a suitable transformer is fitted, (see parts list) from the 200-260 volt, 40 cycle A.C. mains.

The tube types and their various functions are listed under the heading "Tube Complement". The circuit is of novel design and overcomes minimum volume effect, which is a usual disadvantage of reflexed receivers. Minimum volume effect manifests itself in failure of the volume control to cut off, and in serious distortion at low listening levels.

The use of inverse feedback provides bass and treble compensation at low listening levels, and in conjunction with components 3, 8, 41, 39 and switch 61 provides three distinct conditions of audio response, as follows:-

1. Tone control Anti-clockwise-Bass.
2. Tone control Centre position-Wide Range.
3. Tone control Fully clockwise-Treble.

Automatic gain control is applied to the converter tube only and volume is controlled by varying the audio signal applied to the grid of the 6B8G tube. Audio output from this tube is fed directly to the 6V6GT/G power output tube.

ECLIPSE RADIO PTY. LTD.
(A DIVISION OF ELECTRONIC INDUSTRIES LTD.)
11-21 STURT STREET, SOUTH MELBOURNE

TECHNICAL BULLETIN

BULLETIN DJJ-1 **File : Receivers AC.** **Date : 1/4/48**

SUBJECT:- Alignment Instructions - Receiver Type DJJ

Equipment:- Signal Generator.
Output Meter.
Alignment Tool PM581.
Dummy Antenna 200MMFD. I. F. Dummy .01MFD.

Alignment Conditions:- Load Impedance-5,000 Ohms.
Output Level-50 milliwatts.
Volume Control-Full on (clockwise).
Tone Control-Wide Range (Centre Position).

Procedure:- Set the dial pointer to the top margin of the dial scale, with the gang condenser plates fully meshed.

Operation	Generator Connections	Generator Frequency	Dummy Capacitor	Instructions
1.	To grid of 6B8G tube.	455 Kc/s.	.01MFD Mica in series with generator lead.	Leave grid cap on. Peak 2nd IF. transformer primary and secondary.
2.	To grid of 6A8G tube.	455 Kc/s.	.01MFD Mica in series with generator lead.	Gang condenser plates full out. Leave grid cap on Peak 1st IF. Trans. primary and secondary.
3.	To Antenna lead	600 Kc/s.	200MMFD Mica in series with generator lead.	Turn dial pointer to 600 Kc/s. Peak the oscl. coil inductance trimmer (iron core) for Max. output.
4.	To Antenna lead.	1400 Kc/s.	200MMFD Mica in series with generator lead.	Turn dial pointer to 1400 Kc/s. Adjust oscl. coil trimmer for logging and peak antenna coil trimmer.
5.	To Antenna lead.	600 Kc/s.	200MMFD Mica in series with generator lead.	Turn dial pointer to 600 Kc/s. Adjust oscl. coil inductance trimmer for maximum output whilst rocking gang condenser to and fro.

6. Repeat operations 4 and 5.

ECLIPSE RADIO PTY. LTD.

(A DIVISION OF ELECTRONIC INDUSTRIES LTD.)

11-21 STURT STREET, SOUTH MELBOURNE

TECHNICAL BULLETIN

MONARCH RADIO

BULLETIN DJJ-1 **File : Receivers AC.** **Date : 1/4/48**

SUBJECT:- Voltage Table - Receiver Type DJJ

Equipment:-

D.C. Volt Meter:-1000 Ohms per volt with 0-500 volt and 0-10 Volt scales.

A.C. Volt Meter:-with 0-250 volt and 0-10 volt scales.

Conditions of tests:-

All voltages measured from tube socket contacts to chassis, 230 volt, 50 cycle A.C. input, receiver tuned to 1,000 Kc/s., volume control full on (clockwise), no signal.

Tubes	Fil.	Plate	Screen	Grid	Cathode	Oscl. Plate
6A8G	6.3 V.A.C.	260V.	62V.	-	3.8V.	165V.
6B8G	6.3 V.A.C.	100V.	62V.	-	3.2V.	-
6V6GT/G	6.3 V.A.C.	245V.	260V.	-	14V.	-
5Y3GT/G	5.0 V.A.C.	275V/275V. R.M.S. The initial surge voltage across the input, electrolytic condenser, circuit No. 27 is 365 volts, dropping to the normal operating value of 295 volts as the tubes heat. The D.C. voltage drop across the filter choke is 35 volts.				

NOTE :--Type DJJ Receivers Nos. 106-356 inclusive have been wired with positions 1 and 2 of the tone control operating in the opposite direction to that indicated in this bulletin.

The tone control positions on these reccivers will, therefore, be as follows :—

Position 1.	Fully Anti-clockwise.	Wide range.
Position 2.	Centre.	Bass.
Position 3.	Fully Clockwise.	Treble.

BULLETIN DJJ-1 **File : Receivers AC.** **Date : 1/4/48**

Subject:- Circuit Diagram - Receiver Type DJJ

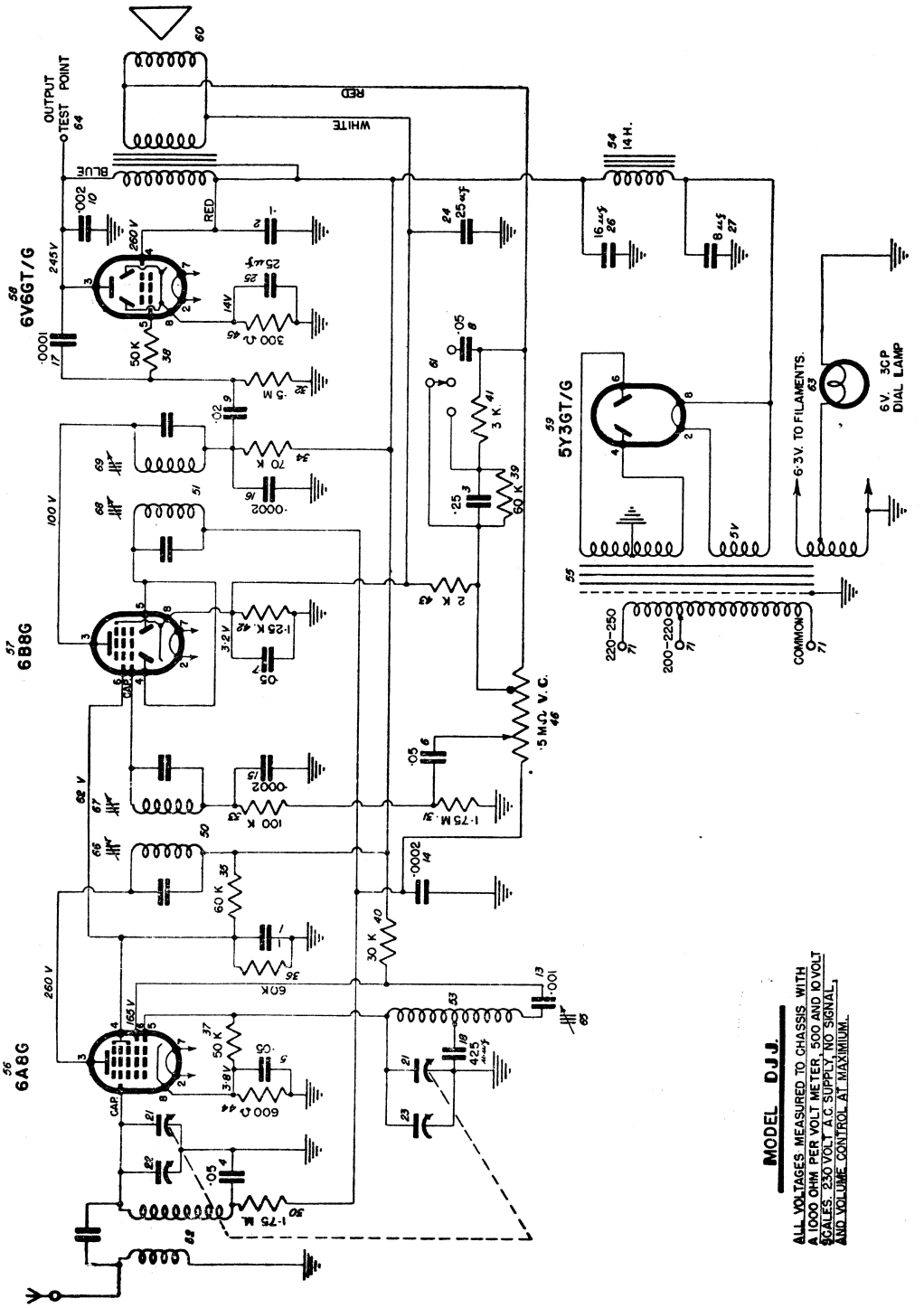

Note: Component No. 3 should read 0.1 mfd and
Component No. 39 should read 40 K. Ω

MONARCH RADIO

ECLIPSE RADIO PTY. LTD.

(A DIVISION OF ELECTRONIC INDUSTRIES LTD.)

11-21 STURT STREET, SOUTH MELBOURNE

TECHNICAL BULLETIN

BULLETIN DJJ-1 **File : Receivers AC.** **Date : 1/4/48**

SUBJECT:- Component Parts List:- Electrical - Receiver Type DJJ

Circuit No.	Part Name	Rating	Tol. + -	Part No. Eclipse
1.	.1 MFD Paper Condenser	400VW	20%	PC103
2.	.1 MFD Paper Condenser	400VW	20%	PC103
3.	.1 MFD Paper Condenser	200VW	20%	PC218
4.	.05 MFD Paper Condenser	200VW	20%	PC102
5.	.05 MFD Paper Condenser	200VW	20%	PC102
6.	.05 MFD Paper Condenser	200VW	20%	PC102
7.	.05 MFD Paper Condenser	200VW	20%	PC102
8.	.05 MFD Paper Condenser	200VW	20%	PC102
9.	.02 MFD Paper Condenser	400VW	20%	PC111
10.	.002 MFD Paper Condenser	600VW	20%	PC112
11.				
12.				
13.	.001 MFD Mica Condenser	1000VT	10%	PC570
14.	.0002 MFD Mica Condenser	1000VT	10%	PC563
15.	.0002 MFD Mica Condenser	1000VT	10%	PC563
16.	.0002 MFD Mica Condenser	1000VT	10%	PC563
17.	.0001 MFD Mica Condenser	1000VT	10%	PC571
18.	425 MMFD Mica Condenser	1000VT	2½%	PC726
19.				
20.				
21.	2 Gang Variable Condenser			PC736
22.	1.5-18 MMFD Trimmer Condenser			PC737
23.	0-30 MMFD Trimmer Condenser (W.W.)			PC663
24.	25 MFD Electrolytic Condenser	40VP	20%	PC318
25.	25 MFD Electrolytic Condenser	40VP	20%	PC660
26.	16 MFD Electrolytic Condenser	525VP	20%	PC300
27.	8 MFD Electrolytic Condenser	525VP	20%	PC313
28.				
29.				
30.	1.75 Meg. Carbon Resistor	½ watt	10%	PR248
31.	1.75 Meg. Carbon Resistor	½ watt	10%	PR248
32.	500,000 Ohm Carbon Resistor	½ watt	10%	PR245
33.	100,000 Ohm Carbon Resistor	½ watt	10%	PR103
34.	70,000 Ohm Carbon Resistor	1 watt	10%	PR617
35.	60,000 Ohm Carbon Resistor	1 watt	10%	PR415
36.	60,000 Ohm Carbon Resistor	1 watt	10%	PR125
37.	50,000 Ohm Carbon Resistor	½ watt	10%	PR160
38.	50,000 Ohm Carbon Resistor	½ watt	10%	PR160

ECLIPSE RADIO PTY. LTD.
(A DIVISION OF ELECTRONIC INDUSTRIES LTD.)
11-21 STURT STREET, SOUTH MELBOURNE

TECHNICAL BULLETIN

BULLETIN DJJ-1 **File : Receivers AC.** **Date : 1/4/48**

SUBJECT:- Component Parts List - Electrical - Receiver Type DJJ

Circuit No.	Part Name	Rating	Tol. + -	Part No. Eclipse
39.	40,000 Ohm Carbon Resistor	½ watt	10%	PR251
40.	30,000 Ohm Carbon Resistor	1 watt	10%	PR156
41.	3,000 Ohm Carbon Resistor	½ watt	10%	PR185
42.	2,500 Ohm Carbon Resistor	½ watt	10%	PR300
43.	2,000 Ohm Carbon Resistor	½ watt	10%	PR253
44.	600 Ohm Carbon Resistor	½ watt	10%	PR338
45.	300 Ohm Wire Wound Resistor	1 watt	10%	PR122
46.	.5 Megohm Carbon Potentiometer tapped at 40,000 Ohms			PR377
47.				
48.				
49.				
50.	1st I.F. Transformer			PT753
51.	2nd I.F. Transformer			PT387
52.	Antenna Transformer			PT381
53.	Oscillator Coil			PT793
54.	14 H. 60 Ma. Choke			PT806
55.	Power Transformer			PT807
	Power Transformer-Western Australian Receivers			PT809
56.	Type 6A8G Tube			
57.	Type 6B8G Tube			
58.	Type 6V6GT/G Tube			
59.	Type 5V3GT Tube			
60.	Permag. Speaker 5,000 Ohm Imp.			K120
61.	Switch-Tone			PM597
62.	Shield-S.T. Bulb			PM217
63.	Dial Lamp-Bayonet Base	6-8V. 3C.P		PM450
64.	Output Test Socket			
65.	Oscillator Transformer Adjusting Screw			
66.	1st I.F. Transformer Primary Adjusting Screw			
67.	1st I.F. Transformer Secondary Adjusting Screw			
68.	2nd I.F. Transformer Primary Adjusting Screw			
69.	2nd I.F. Transformer Secondary Adjusting Screw			
70.	Tuning Spindle			
71.	Mains Input Terminal Strip			
72.	Socket 8 pin (4)			PM532
73.				
74.				

ECLIPSE RADIO PTY. LTD.
(A DIVISION OF ELECTRONIC INDUSTRIES LTD.)
11-21 STURT STREET, SOUTH MELBOURNE

TECHNICAL BULLETIN

BULLETIN DJJ-1 **File : Receivers AC.** **Date : 1/4/48**

SUBJECT:- Component Parts List - Mechanical, Receiver Type "DJJ"

Spring-cord tension.	73/239-1.
Dial Cord.	7/282.
Reflector-Dial Light.	4/657.
Dial Light Assembly.	A104/657.
Grommets-Condenser Mounting.	64/30A.
Bush-Condenser Mounting.	93/53-1.
Grid Clips.	873/495.
Valve Shield Earth Contact.	22/30C.
Terminal Strip Assembly.	A103/509.
Speaker Gaskets (4).	15/657.
Dial Pointer Assembly.	A102/657.
Springs-Diffuser.	3/657.
Diffuser Assembly.	A103/657.
Slide Bar.	10/657.
Rubber Ring-Pointer Assembly.	22/657.
Speed Nuts-Set Mounting.	86/E200.
Screws-Set Mounting.	36/560-6.
Cabinet.	1/E245.
Control Knobs (Front).	1/E252.
Felt Washers-Control Knobs.	66/30C.
Control Knobs-(Side).	84/81
Spring-Control Knob.	17/81.
Dial Reading.	7/E263.
Speed Nuts-Dial Glass-Trim Plate.	227/250.

ECLIPSE RADIO PTY. LTD.
(A DIVISION OF ELECTRONIC INDUSTRIES LTD.)
11-21 STURT STREET, SOUTH MELBOURNE

TECHNICAL BULLETIN

BULLETIN DJJ-1 **File : Receivers AC.** **Date : 1/4/48**

SUBJECT:- Coil and I.F. Transformer Connections – Receiver Type DJJ

A.V.C. Earth

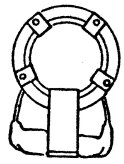

(Outside Secondary) Grid Antenna (Inside Primary)
ANT. TRANSFORMER.

Grid 6A8G Oscl. Plate Cond.

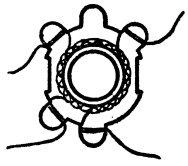

Series Pad Series Pad
OSCL. TRANSFORMER.

Junction of 33 and 15 6B8G Conrol Grid

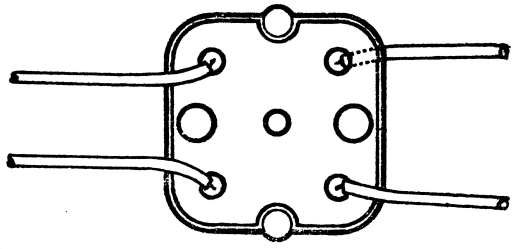

6A8G Plate B+ (Untinned Wire)
1st IF. TRANS.

Diode return 6B8G Diode.

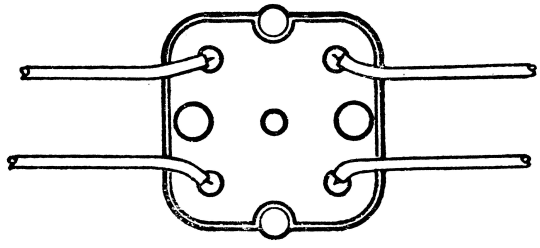

6B8G plate Junction of 16, 34 and 9.
2nd IF. TRANS.