POWER
MENU
SOURCE
SEL
NUMBER
VOL
MUTE
#
1
2
3
RAND
SCAN
REP
4
5
6
7
8
9
BAND
0
DISP
SET
Panasonic
Car Audio

MP3/WMA
Panasonic
CQ-DFX983U
MOSFET 50Wx4
MENU
OPEN
P.SET/DISP
PWR
SHIP
MUTE
DIM
SOURCE
VOL push SEL
D·M
TUNE/TRACK
BAND
SET/APM
FOLDER
CD RECEIVER WITH FULL DOT MATRIX DISPLAY
SIRIUS
DISP

(CQ-DFX983U)

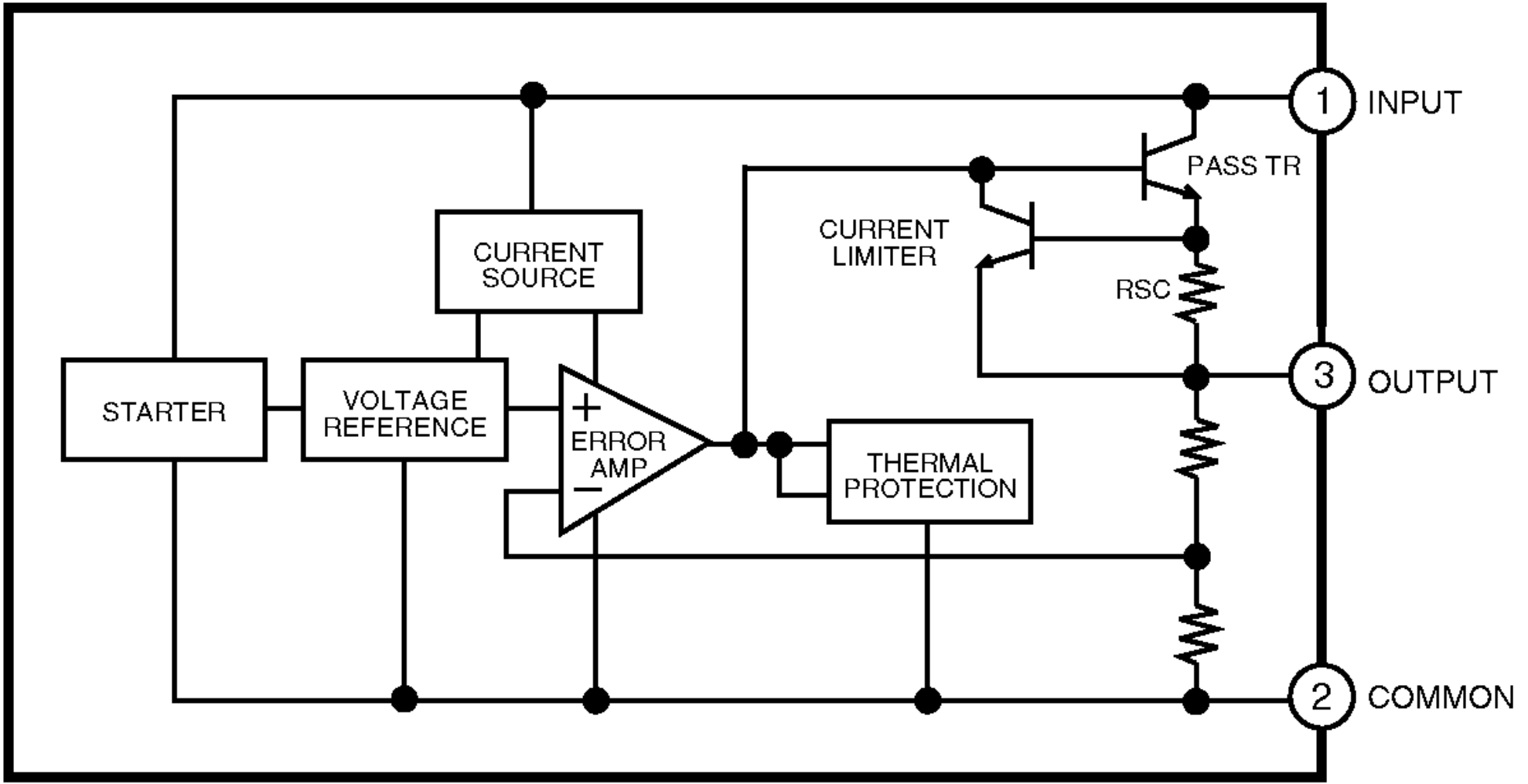
1
INPUT
PASS TR
CURRENT
LIMITER
CURRENT
SOURCE
RSC
3
OUTPUT
STARTER
VOLTAGE
REFERENCE
+
ERROR
AMP
−
THERMAL
PROTECTION
2
COMMON

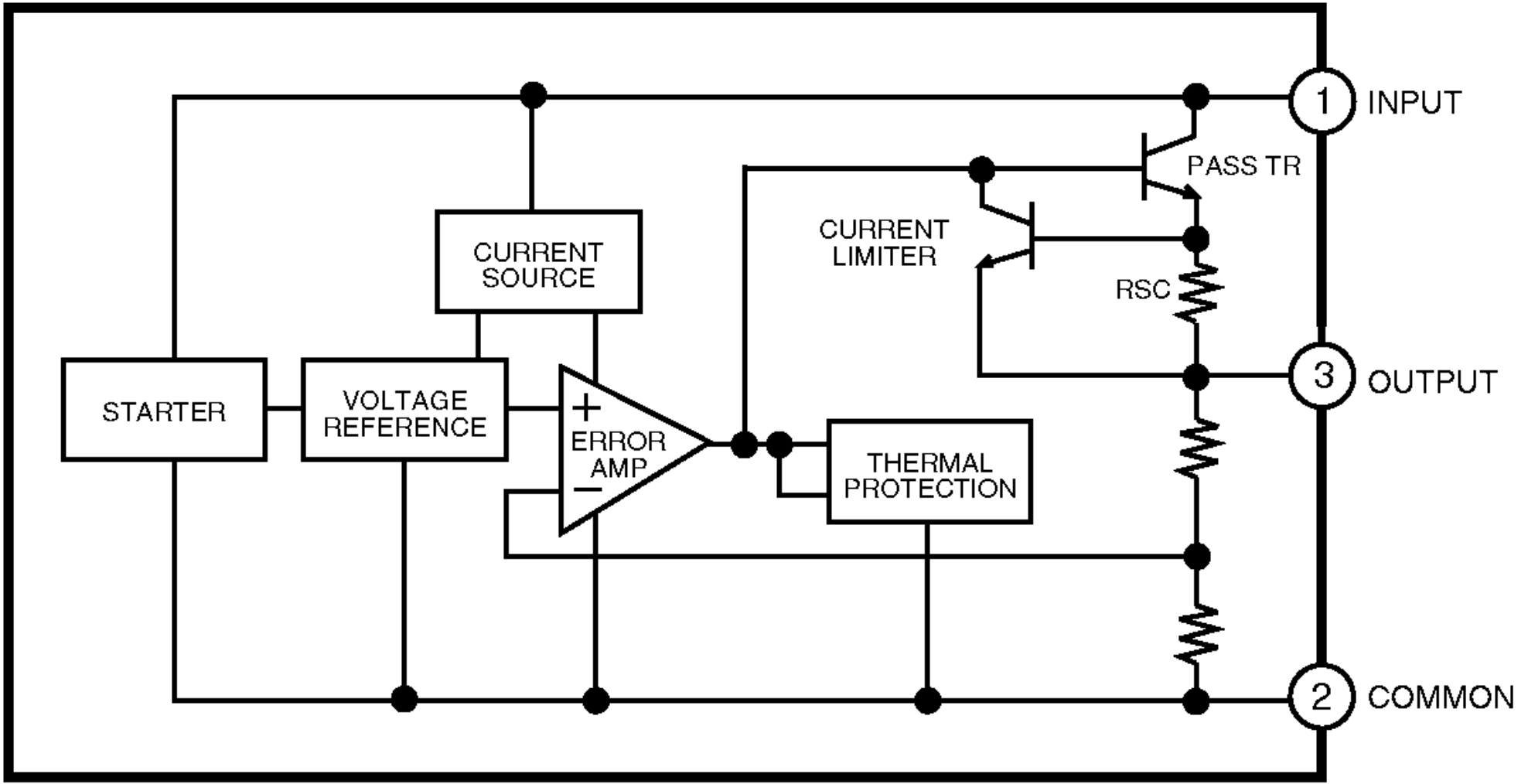
1
INPUT
PASS TR
CURRENT
LIMITER
CURRENT
SOURCE
RSC
3
OUTPUT
STARTER
VOLTAGE
REFERENCE
+
ERROR
AMP
−
THERMAL
PROTECTION
2
COMMON

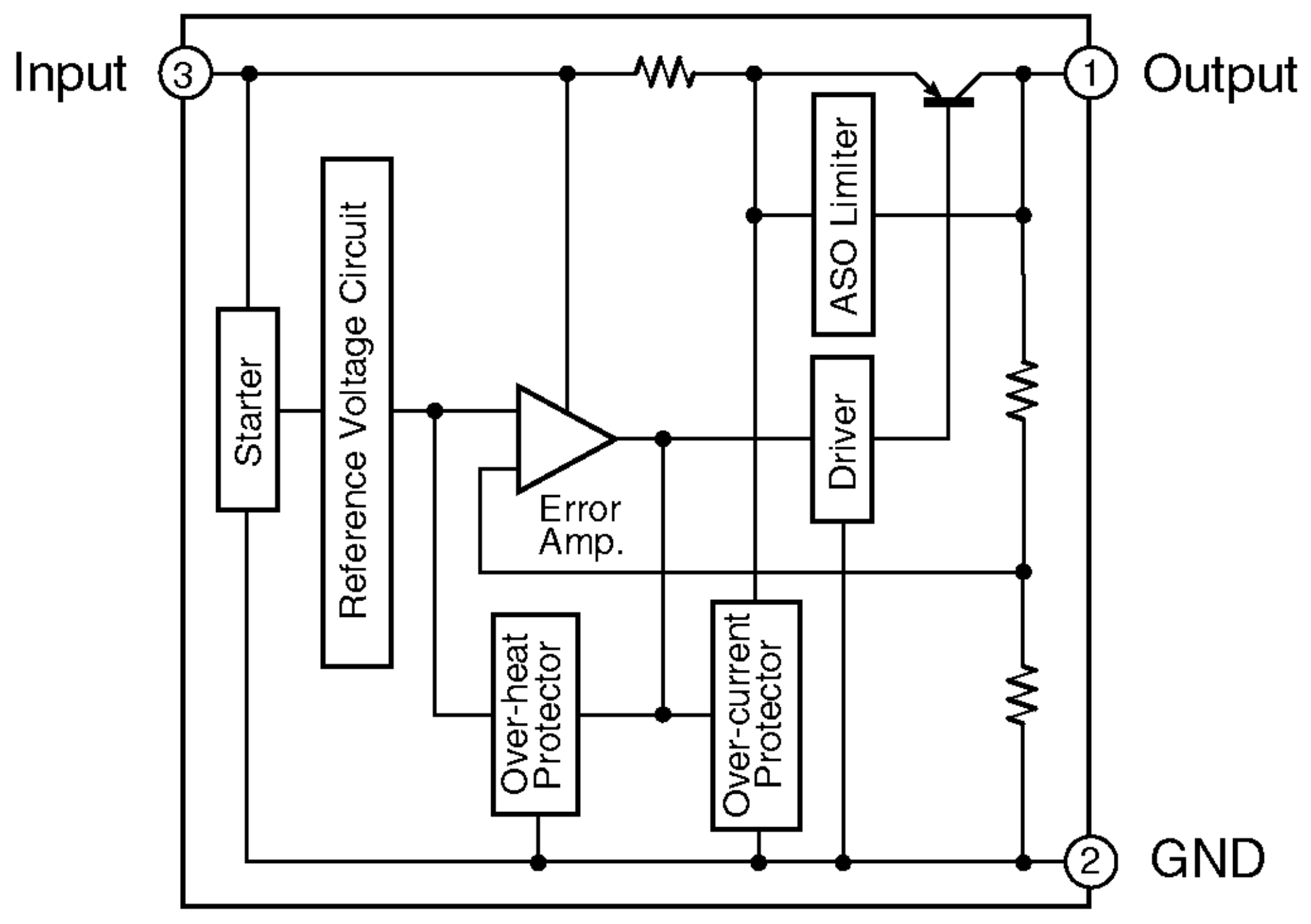
Input
3
1
Output
Starter
Reference Voltage Circuit
Error
Amp.
ASO Limiter
Driver
Over-heat
Protector
Over-current
Protector
2
GND

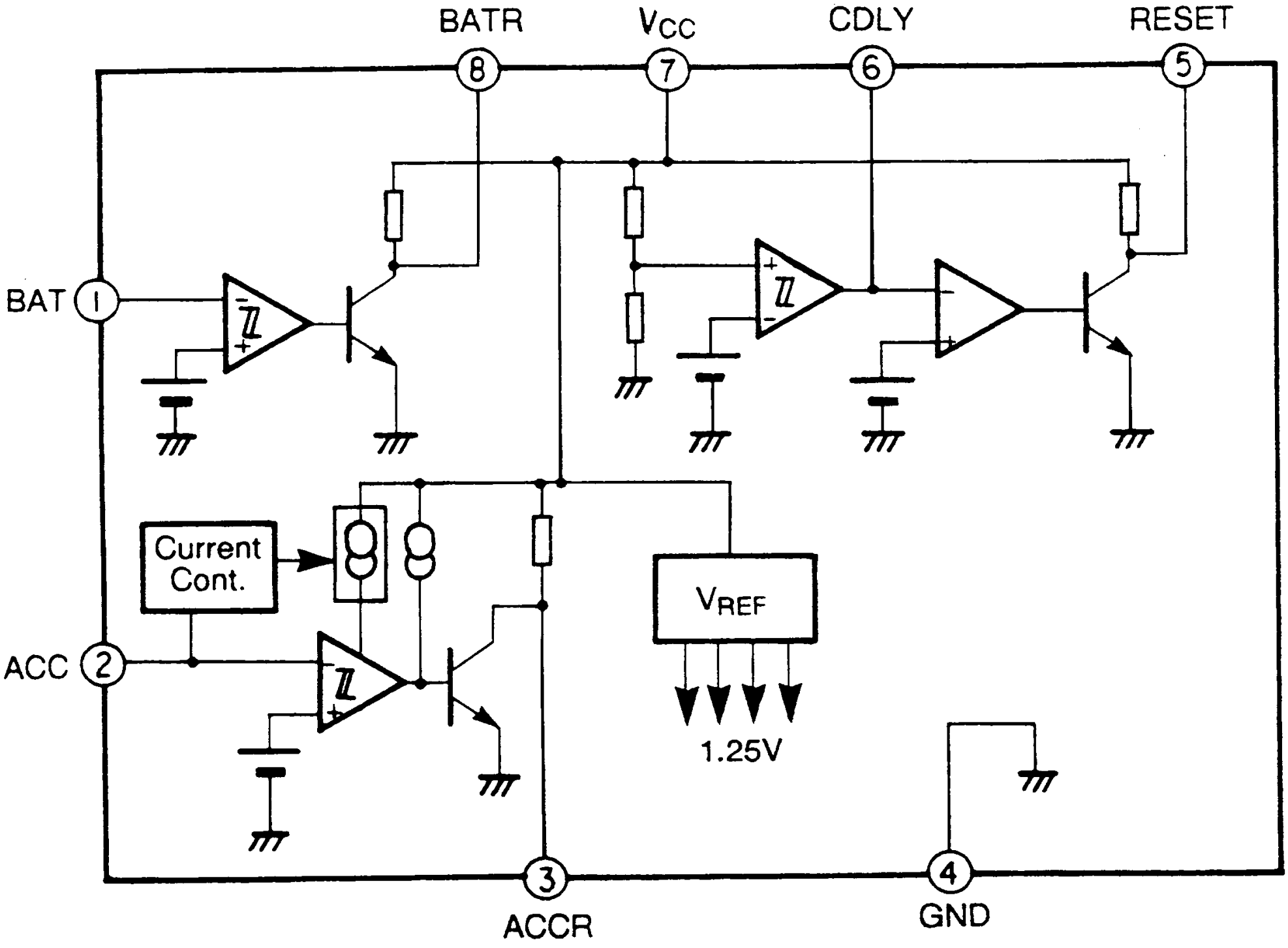
BATR
VCC
CDLY
RESET
8
7
6
5
BAT
1
Current Cont.
VREF
ACC
2
1.25V
3
ACCR
4
GND

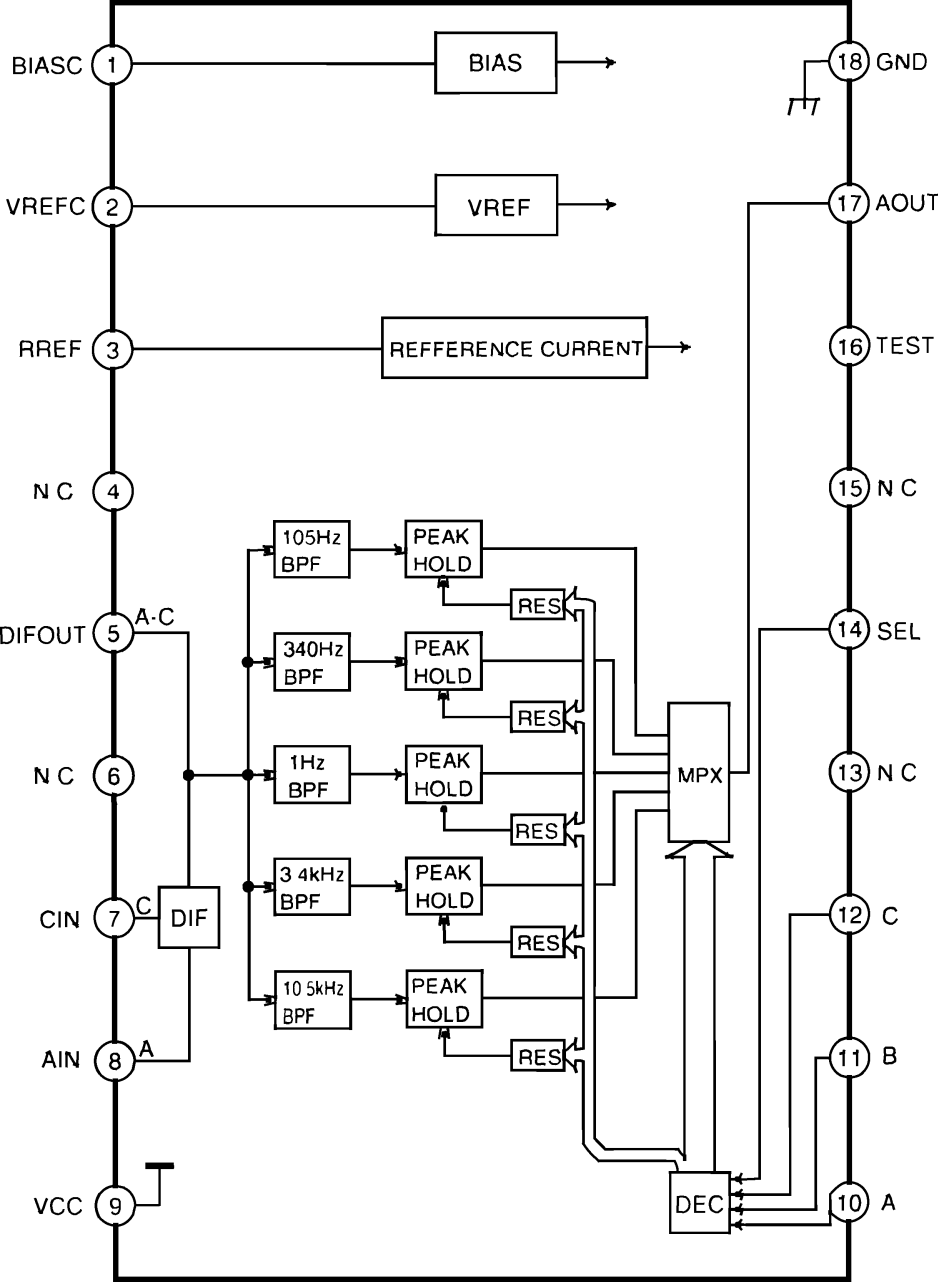
BIASC
1
BIAS
18
GND
VREFC
2
VREF
17
AOUT
RREF
3
REFFERENCE CURRENT
16
TEST
N C
4
15
N C
DIFOUT
5
A-C
14
SEL
N C
6
13
N C
CIN
7
C
DIF
12
C
AIN
8
A
11
B
VCC
9
10
A
105Hz BPF
340Hz BPF
1Hz BPF
3 4kHz BPF
10 5kHz BPF
PEAK HOLD
RES
MPX
DEC

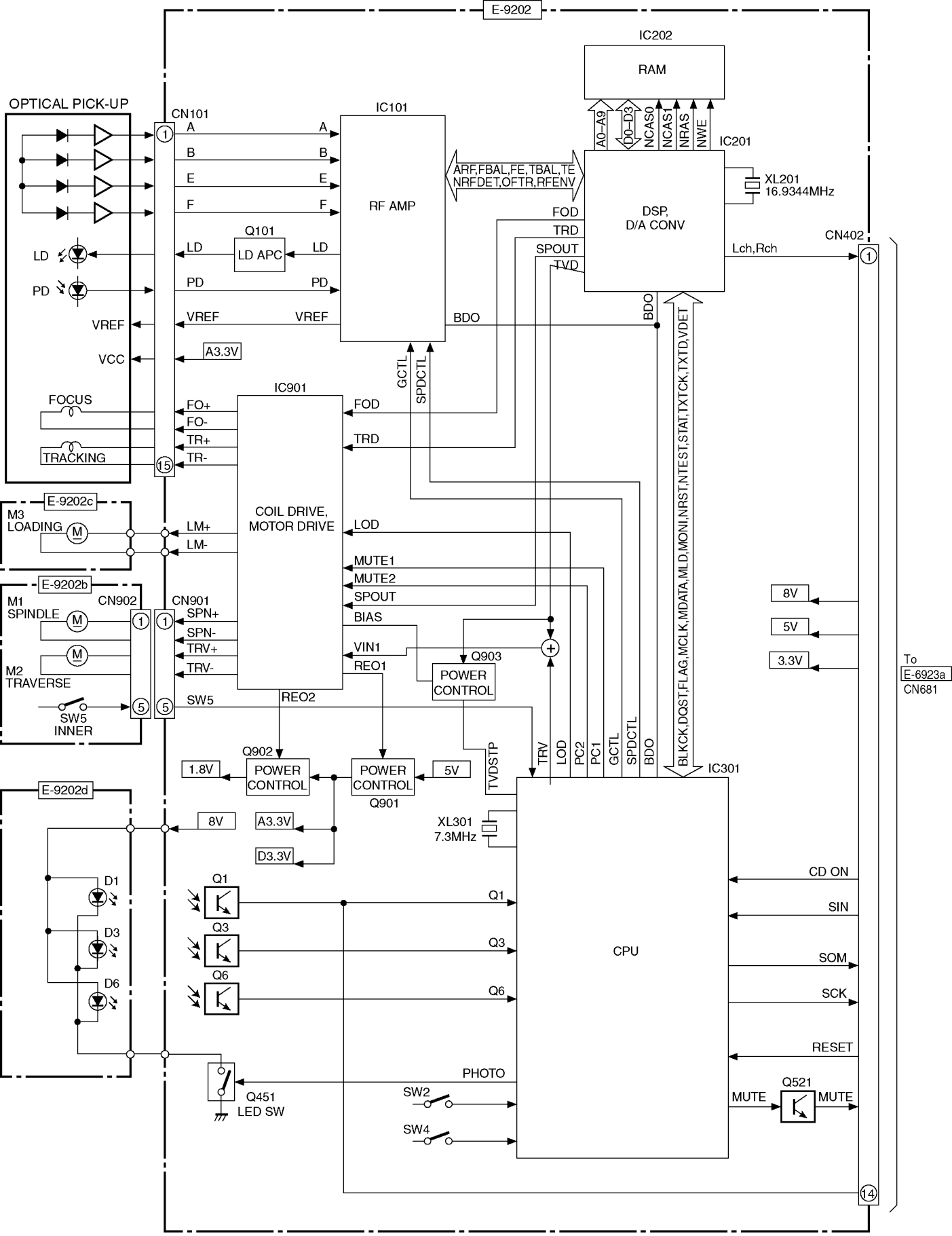
E-9202
IC202
RAM
OPTICAL PICK-UP
CN101
IC101
A0–A9
D0–D3
NCAS0
NCAS1
NRAS
NWE
IC201
A
B
E
F
RF AMP
ARF,FBAL,FE,TBAL,TE
NRFDET,OFTR,RFENV
XL201
16.9344MHz
DSP,
D/A CONV
FOD
TRD
SPOUT
TVD
Q101
LD APC
LD
PD
VREF
VCC
A3.3V
BDO
CN402
Lch,Rch
GCTL
SPDCTL
FOCUS
TRACKING
FO+
FO-
TR+
TR-
IC901
COIL DRIVE,
MOTOR DRIVE
E-9202c
M3
LOADING
LM+
LM-
LOD
MUTE1
MUTE2
BIAS
VIN1
REO1
REO2
E-9202b
M1
SPINDLE
M2
TRAVERSE
CN902
CN901
SPN+
SPN-
TRV+
TRV-
SW5
SW5
INNER
Q903
POWER
CONTROL
Q902
1.8V
5V
Q901
TVDSTP
TRV
PC2
PC1
BLKCK,DQST,FLAG,MCLK,MDATA,MLD,MONI,NRST,NTEST,STAT,TXTCK,TXTD,VDET
8V
3.3V
To
E-6923a
CN681
IC301
E-9202d
D1
D3
D6
Q1
Q3
Q6
XL301
7.3MHz
D3.3V
CPU
CD ON
SIN
SOM
SCK
RESET
PHOTO
Q451
LED SW
SW2
SW4
MUTE
Q521

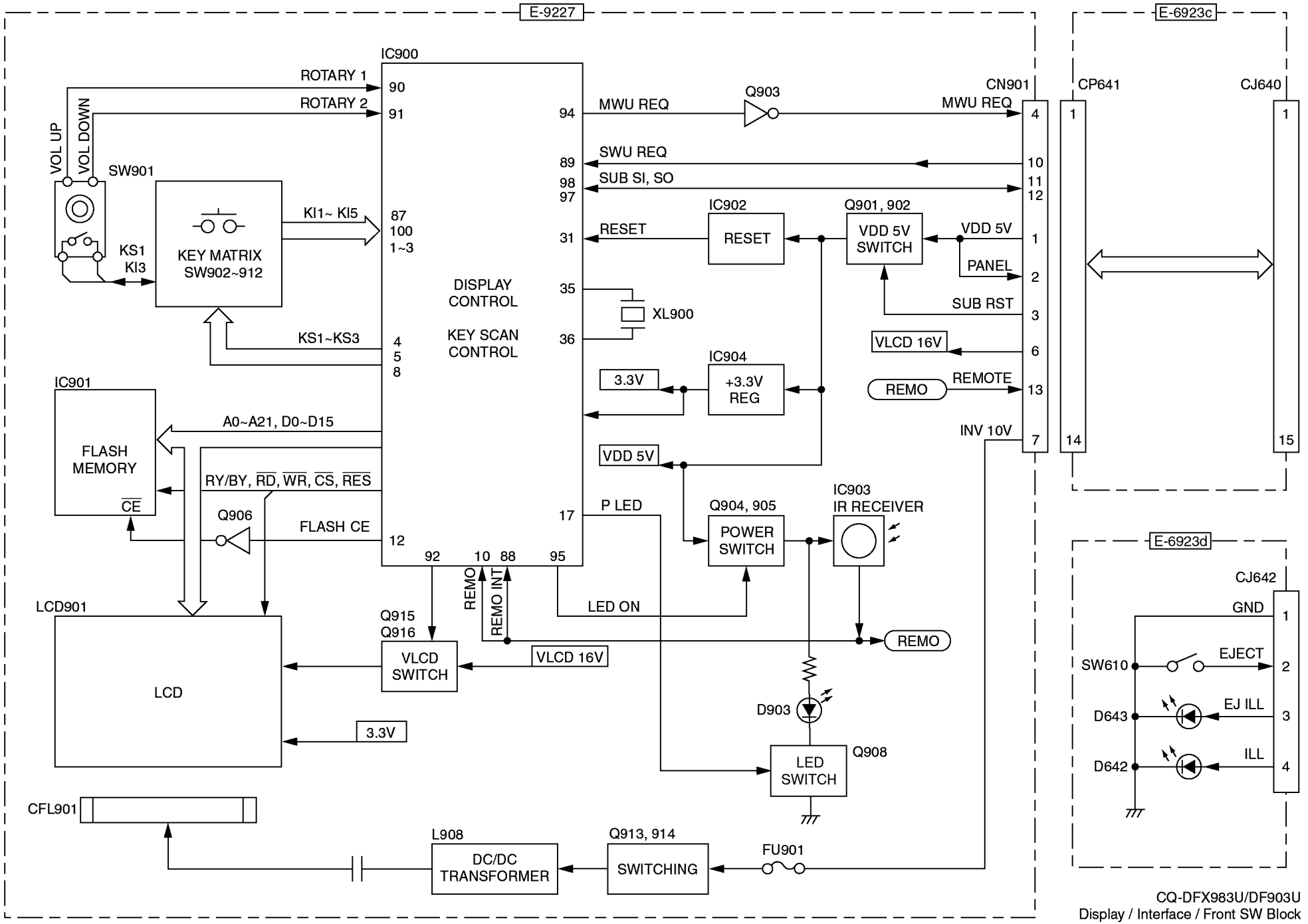

CQ-DFX983U/DF903U
Display / Interface / Front SW Block

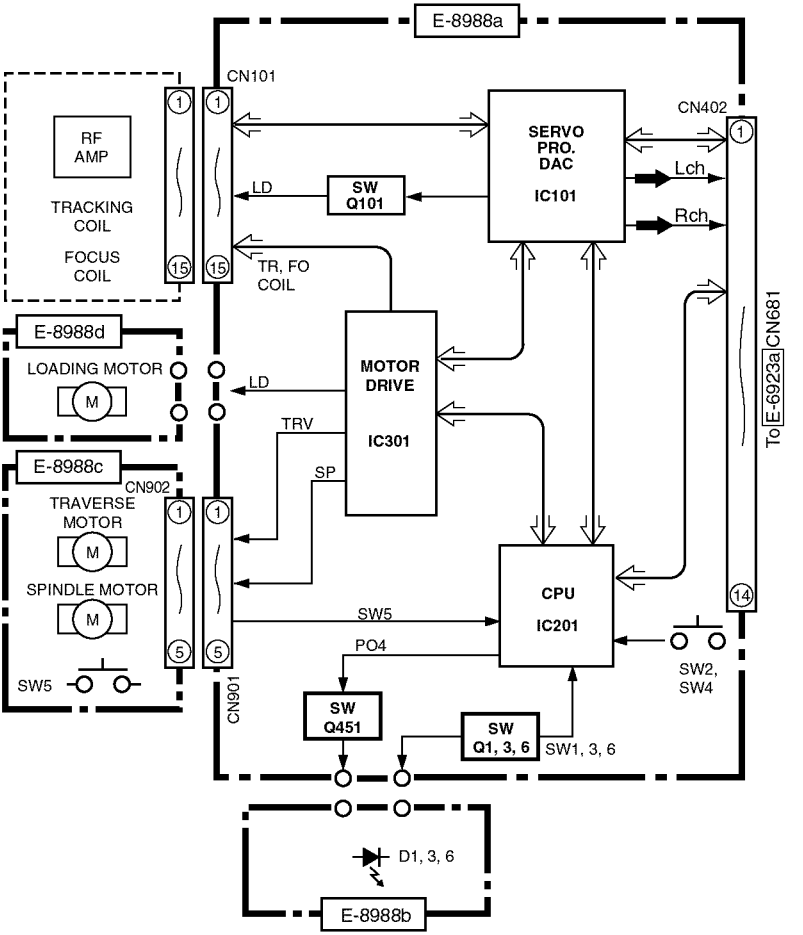
E-8988a
CN101
RF AMP
TRACKING COIL
FOCUS COIL
LD
SW Q101
SERVO PRO. DAC
IC101
CN402
Lch
Rch
TR, FO COIL
E-8988d
LOADING MOTOR
M
LD
MOTOR DRIVE
IC301
TRV
SP
To E-6923a CN681
E-8988c
CN902
TRAVERSE MOTOR
SPINDLE MOTOR
SW5
CN901
CPU
IC201
SW5
PO4
SW2, SW4
SW Q451
SW Q1, 3, 6
SW1, 3, 6
D1, 3, 6
E-8988b

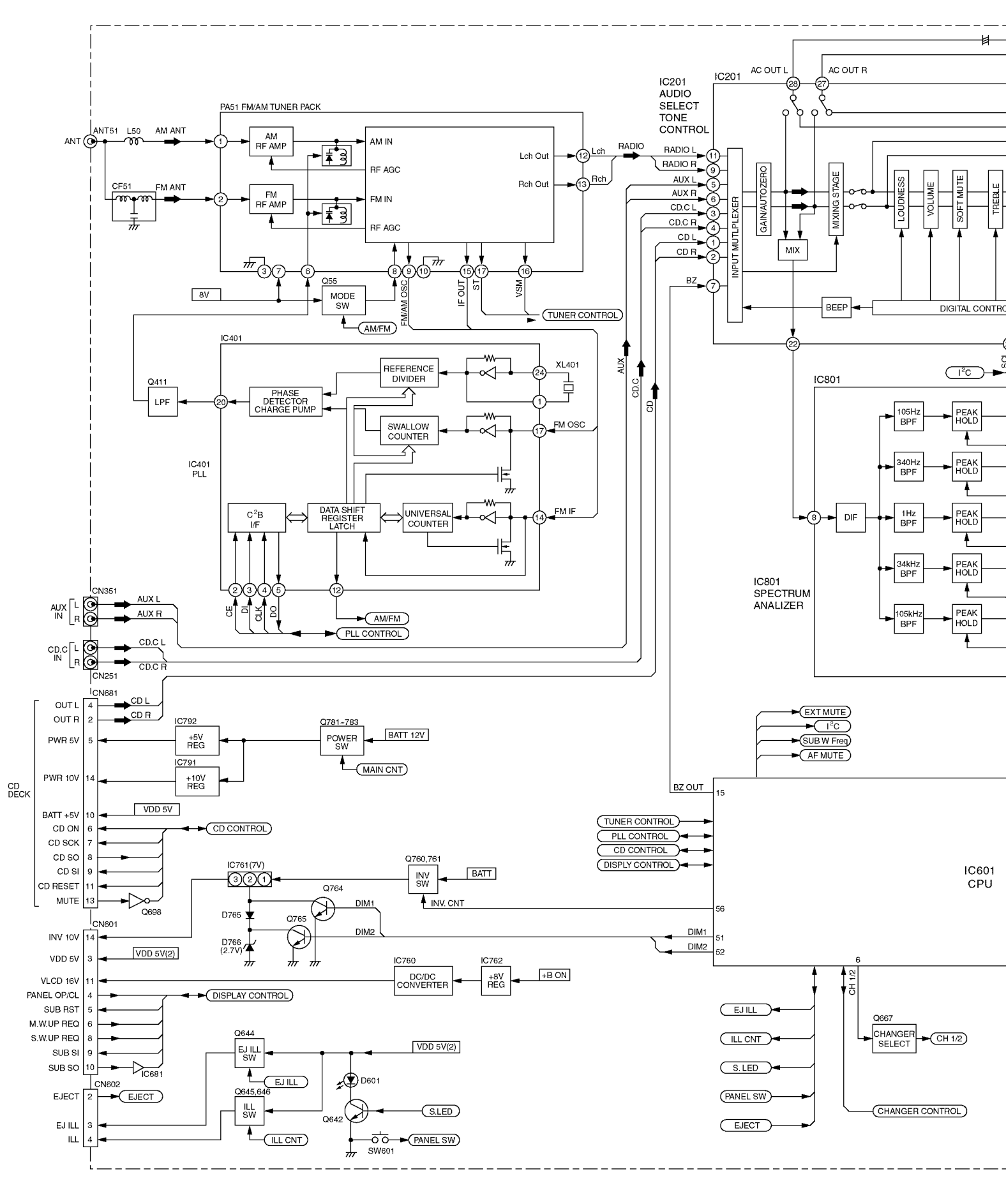
PA51 FM/AM TUNER PACK
ANT
ANT51
L50
AM ANT
CF51
FM ANT
AM RF AMP
FM RF AMP
AM IN
RF AGC
FM IN
RF AGC
Lch Out
Rch Out
Lch
Rch
RADIO
8V
Q55
MODE SW
AM/FM
FM/AM OSC
IF OUT
ST
VSM
TUNER CONTROL
IC201
IC201 AUDIO SELECT TONE CONTROL
AC OUT L
AC OUT R
RADIO L
RADIO R
AUX L
AUX R
CD.C L
CD.C R
CD L
CD R
BZ
INPUT MUTLPLEXER
GAIN/AUTOZERO
MIX
MIXING STAGE
LOUDNESS
VOLUME
SOFT MUTE
TREBLE
BEEP
DIGITAL CONTRO
IC401
Q411
LPF
PHASE DETECTOR CHARGE PUMP
REFERENCE DIVIDER
XL401
SWALLOW COUNTER
FM OSC
IC401 PLL
C²B I/F
DATA SHIFT REGISTER LATCH
UNIVERSAL COUNTER
FM IF
CE
DI
CLK
DO
AM/FM
PLL CONTROL
AUX
CD.C
CD
I²C
IC801
105Hz BPF
340Hz BPF
1Hz BPF
34kHz BPF
105kHz BPF
PEAK HOLD
DIF
IC801 SPECTRUM ANALIZER
CN351
AUX IN
AUX L
AUX R
CD.C IN
CD.C L
CD.C R
CN251
CN681
OUT L
OUT R
CD L
CD R
PWR 5V
PWR 10V
IC792
+5V REG
IC791
+10V REG
Q781~783
POWER SW
BATT 12V
MAIN CNT
CD DECK
BATT +5V
VDD 5V
CD ON
CD SCK
CD SO
CD SI
CD RESET
MUTE
CD CONTROL
Q698
IC761(7V)
Q760,761
INV SW
BATT
INV. CNT
Q764
Q765
D765
D766 (2.7V)
DIM1
DIM2
CN601
INV 10V
VDD 5V
VDD 5V(2)
VLCD 16V
PANEL OP/CL
SUB RST
M.W.UP REQ
S.W.UP REQ
SUB SI
SUB SO
IC681
IC760
DC/DC CONVERTER
IC762
+8V REG
+B ON
DISPLAY CONTROL
Q644
EJ ILL SW
EJ ILL
D601
Q642
S.LED
CN602
EJECT
EJ ILL
ILL
Q645,646
ILL SW
ILL CNT
SW601
PANEL SW
EXT MUTE
I²C
SUB W Freq
AF MUTE
BZ OUT
TUNER CONTROL
PLL CONTROL
CD CONTROL
DISPLY CONTROL
IC601 CPU
CH 1/2
Q667
CHANGER SELECT
CHANGER CONTROL

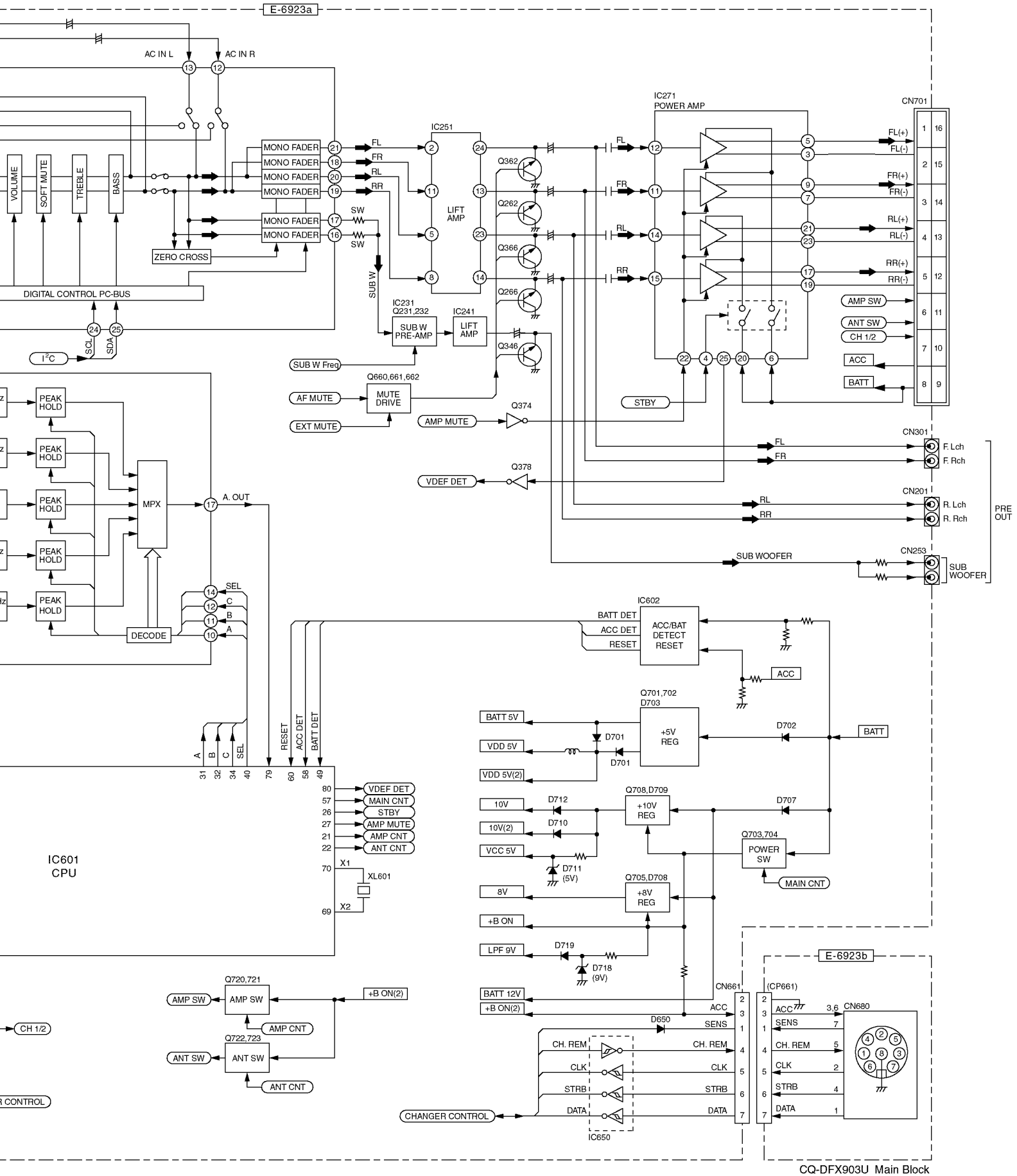
E-6923a
AC IN L
AC IN R
VOLUME
SOFT MUTE
TREBLE
BASS
MONO FADER
ZERO CROSS
DIGITAL CONTROL PC-BUS
SCL
SDA
I²C
IC251
LIFT AMP
SW
SUB W
IC231
Q231,232
SUB W PRE-AMP
IC241
LIFT AMP
SUB W Freq
Q660,661,662
MUTE DRIVE
AF MUTE
EXT MUTE
Q374
AMP MUTE
Q378
VDEF DET
IC271
POWER AMP
CN701
FL(+)
FL(-)
FR(+)
FR(-)
RL(+)
RL(-)
RR(+)
RR(-)
AMP SW
ANT SW
CH 1/2
ACC
BATT
STBY
CN301
F. Lch
F. Rch
CN201
R. Lch
R. Rch
PRE OUT
CN253
SUB WOOFER
PEAK HOLD
MPX
A. OUT
DECODE
SEL
IC602
BATT DET
ACC DET
RESET
ACC/BAT DETECT RESET
Q701,702
D703
+5V REG
BATT 5V
VDD 5V
VDD 5V(2)
D701
D702
BATT
Q708,D709
+10V REG
10V
10V(2)
VCC 5V
D712
D710
D711 (5V)
D707
Q703,704
POWER SW
MAIN CNT
Q705,D708
+8V REG
8V
+B ON
LPF 9V
D719
D718 (9V)
IC601
CPU
VDEF DET
MAIN CNT
STBY
AMP MUTE
AMP CNT
ANT CNT
XL601
Q720,721
AMP SW
+B ON(2)
Q722,723
ANT SW
CH 1/2
R CONTROL
BATT 12V
CN661
(CP661)
CN680
D650
SENS
CH. REM
CLK
STRB
DATA
CHANGER CONTROL
IC650
E-6923b

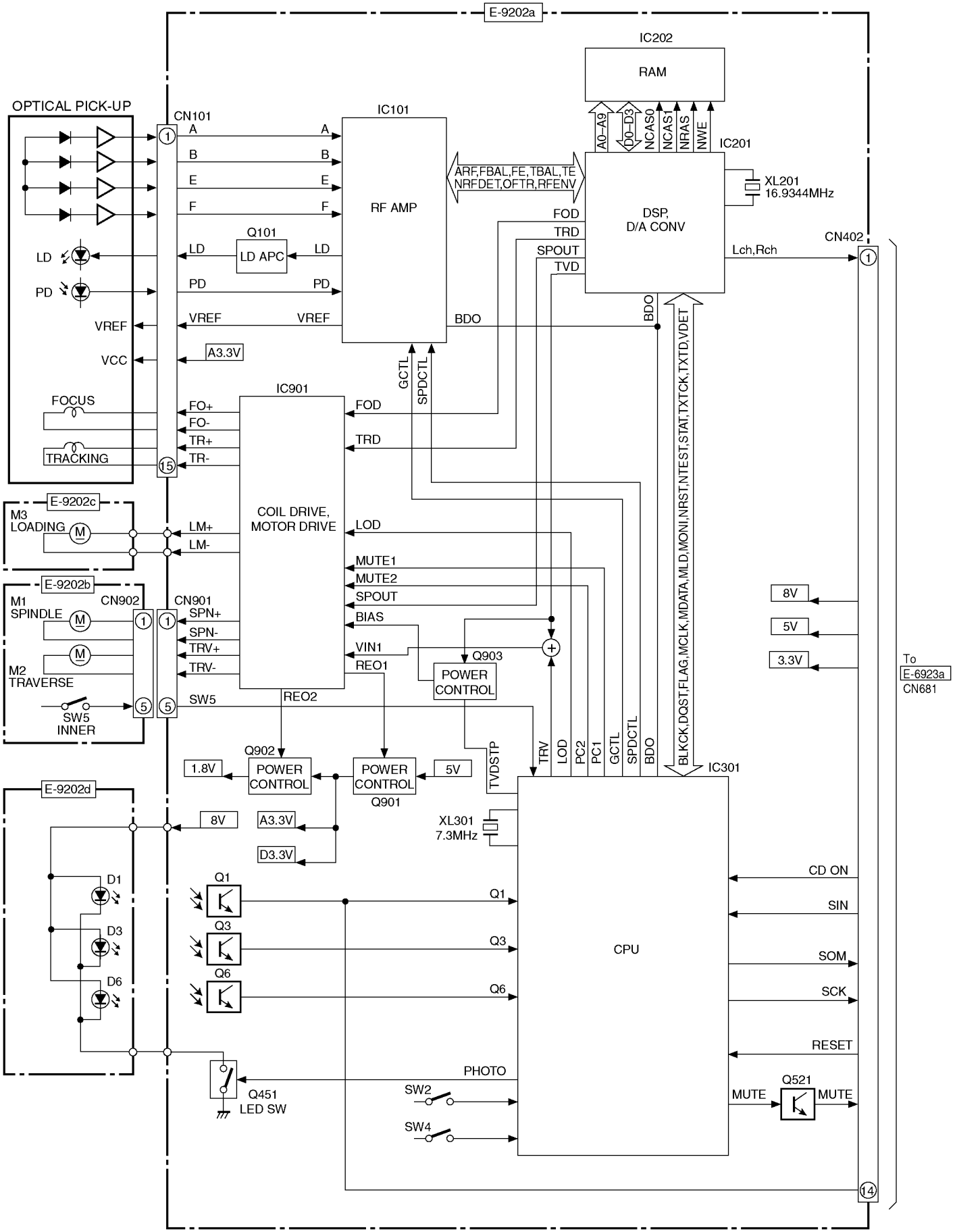
E-9202a
IC202
RAM
OPTICAL PICK-UP
CN101
IC101
A0–A9
D0–D3
NCAS0
NCAS1
NRAS
NWE
IC201
A
B
E
F
RF AMP
ARF,FBAL,FE,TBAL,TE
NRFDET,OFTR,RFENV
XL201
16.9344MHz
DSP,
D/A CONV
FOD
TRD
SPOUT
TVD
Q101
LD APC
LD
PD
VREF
VCC
A3.3V
BDO
CN402
Lch,Rch
GCTL
SPDCTL
FOCUS
TRACKING
FO+
FO-
TR+
TR-
IC901
COIL DRIVE,
MOTOR DRIVE
E-9202c
M3
LOADING
LM+
LM-
LOD
MUTE1
MUTE2
BIAS
VIN1
REO1
REO2
E-9202b
M1
SPINDLE
CN902
CN901
SPN+
SPN-
TRV+
TRV-
M2
TRAVERSE
SW5
INNER
Q903
POWER
CONTROL
BLKCK,DQST,FLAG,MCLK,MDATA,MLD,MONI,NRST,NTEST,STAT,TXTCK,TXTD,VDET
8V
5V
3.3V
To
E-6923a
CN681
Q902
1.8V
POWER
CONTROL
POWER
CONTROL
Q901
TVDSTP
TRV
PC2
PC1
IC301
E-9202d
XL301
7.3MHz
A3.3V
D3.3V
D1
D3
D6
Q1
Q3
Q6
CPU
CD ON
SIN
SOM
SCK
RESET
PHOTO
Q451
LED SW
SW2
SW4
MUTE
Q521

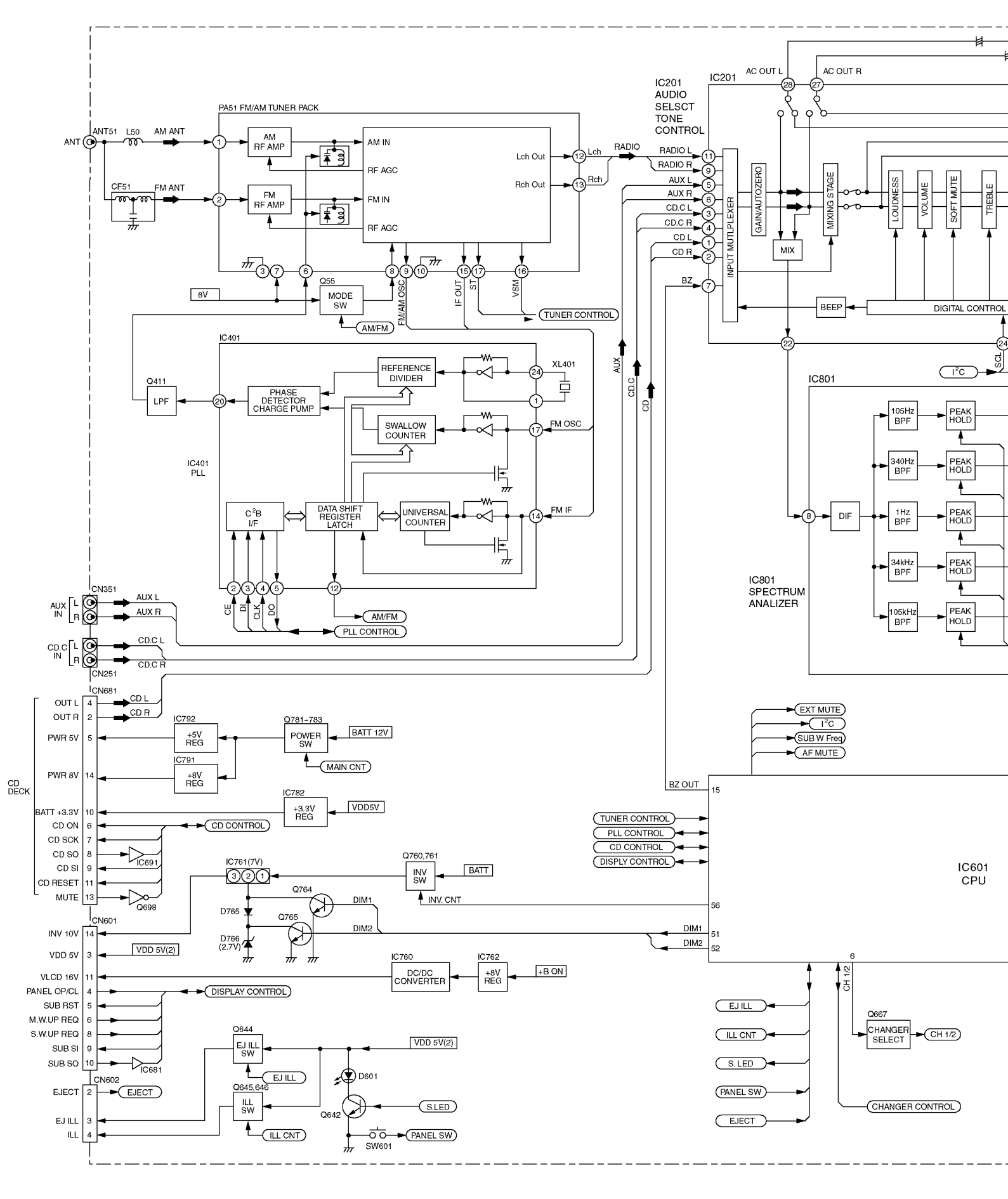
PA51 FM/AM TUNER PACK
ANT
ANT51
L50
AM ANT
CF51
FM ANT
AM RF AMP
FM RF AMP
AM IN
RF AGC
FM IN
RF AGC
Lch Out
Rch Out
Lch
Rch
RADIO
8V
Q55
MODE SW
AM/FM
FM/AM OSC
IF OUT
ST
VSM
TUNER CONTROL
IC201
IC201 AUDIO SELSCT TONE CONTROL
AC OUT L
AC OUT R
RADIO L
RADIO R
AUX L
AUX R
CD.C L
CD.C R
CD L
CD R
BZ
INPUT MUTLPLEXER
GAIN/AUTOZERO
MIX
MIXING STAGE
LOUDNESS
VOLUME
SOFT MUTE
TREBLE
BEEP
DIGITAL CONTROL
I²C
SCL
IC401
Q411
LPF
PHASE DETECTOR CHARGE PUMP
REFERENCE DIVIDER
XL401
SWALLOW COUNTER
FM OSC
IC401 PLL
C²B I/F
DATA SHIFT REGISTER LATCH
UNIVERSAL COUNTER
FM IF
CE
DI
CLK
DO
PLL CONTROL
AUX
CD.C
CD
IC801
DIF
105Hz BPF
340Hz BPF
1Hz BPF
34kHz BPF
105kHz BPF
PEAK HOLD
IC801 SPECTRUM ANALIZER
CN351
AUX IN
L
R
AUX L
AUX R
CD.C IN
CD.C L
CD.C R
CN251
CN681
OUT L
OUT R
CD L
CD R
PWR 5V
PWR 8V
IC792
+5V REG
IC791
+8V REG
Q781-783
POWER SW
BATT 12V
MAIN CNT
CD DECK
BATT +3.3V
IC782
+3.3V REG
VDD5V
CD ON
CD SCK
CD SO
CD SI
CD RESET
MUTE
CD CONTROL
IC691
Q698
IC761(7V)
Q760,761
INV SW
BATT
INV. CNT
Q764
Q765
D765
D766 (2.7V)
DIM1
DIM2
CN601
INV 10V
VDD 5V
VDD 5V(2)
VLCD 16V
PANEL OP/CL
SUB RST
M.W.UP REQ
S.W.UP REQ
SUB SI
SUB SO
IC681
IC760
DC/DC CONVERTER
IC762
+8V REG
+B ON
DISPLAY CONTROL
Q644
EJ ILL SW
EJ ILL
D601
Q642
S.LED
CN602
EJECT
EJ ILL
ILL
Q645,646
ILL SW
ILL CNT
SW601
PANEL SW
EXT MUTE
I²C
SUB W Freq
AF MUTE
BZ OUT
TUNER CONTROL
PLL CONTROL
CD CONTROL
DISPLY CONTROL
IC601 CPU
CH 1/2
Q667
CHANGER SELECT
CHANGER CONTROL

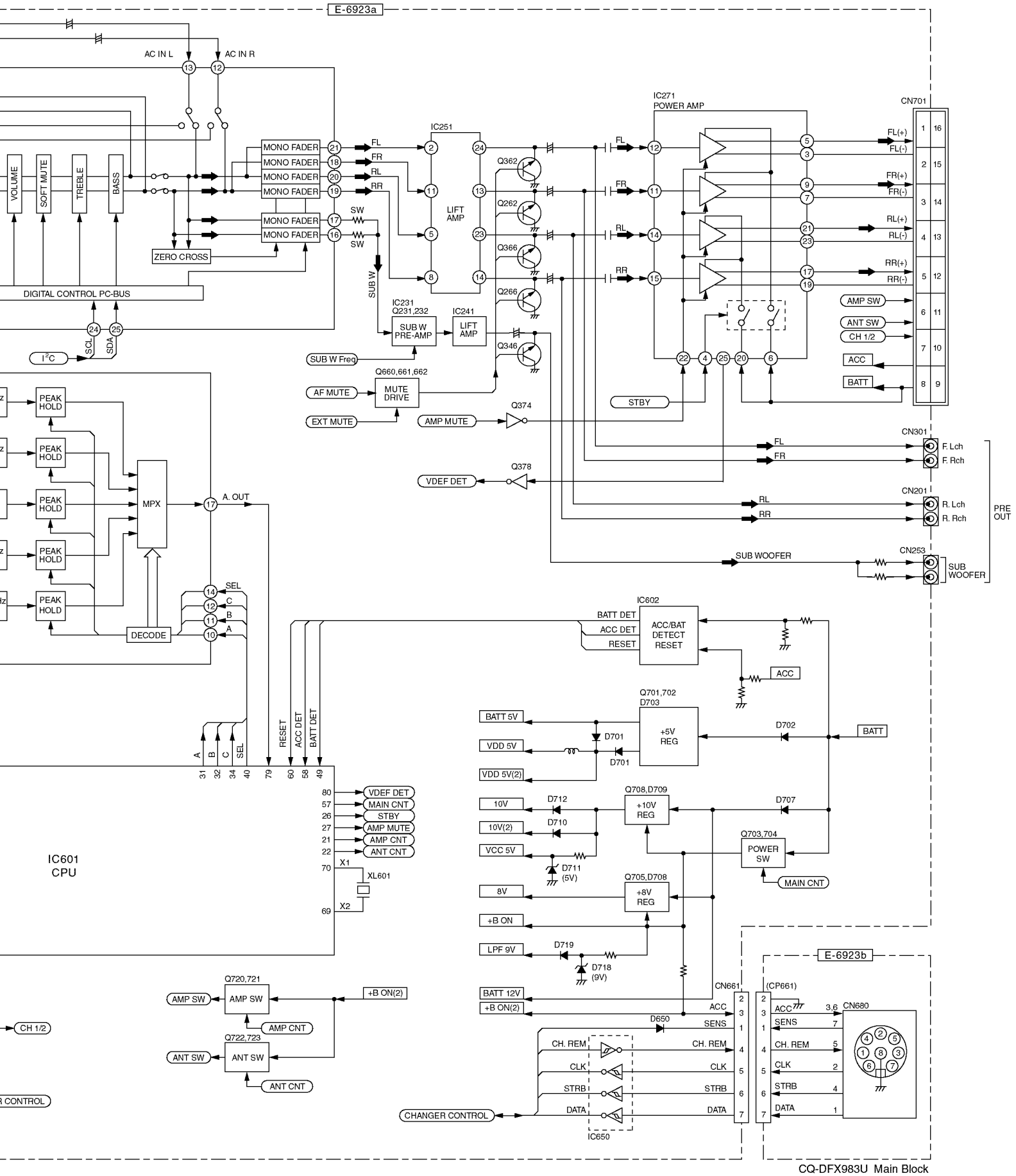
E-6923a
AC IN L
AC IN R
VOLUME
SOFT MUTE
TREBLE
BASS
MONO FADER
ZERO CROSS
DIGITAL CONTROL PC-BUS
SCL
SDA
I²C
IC251
LIFT AMP
SW
SUB W
IC231
Q231,232
SUB W PRE-AMP
IC241
LIFT AMP
SUB W Freq
Q660,661,662
MUTE DRIVE
AF MUTE
EXT MUTE
Q374
AMP MUTE
Q378
VDEF DET
IC271
POWER AMP
CN701
FL(+)
FL(-)
FR(+)
FR(-)
RL(+)
RL(-)
RR(+)
RR(-)
AMP SW
ANT SW
CH 1/2
ACC
BATT
STBY
CN301
F. Lch
F. Rch
CN201
R. Lch
R. Rch
PRE OUT
CN253
SUB WOOFER
PEAK HOLD
MPX
A. OUT
DECODE
SEL
IC602
BATT DET
ACC DET
RESET
ACC/BAT DETECT RESET
Q701,702
D703
+5V REG
BATT 5V
VDD 5V
VDD 5V(2)
D701
D702
BATT
IC601
CPU
VDEF DET
MAIN CNT
STBY
AMP MUTE
AMP CNT
ANT CNT
XL601
X1
X2
Q708,D709
+10V REG
10V
10V(2)
VCC 5V
D712
D710
D711 (5V)
D707
Q703,704
POWER SW
MAIN CNT
Q705,D708
+8V REG
8V
+B ON
LPF 9V
D719
D718 (9V)
BATT 12V
+B ON(2)
Q720,721
AMP SW
Q722,723
ANT SW
CH 1/2
CHANGER CONTROL
CN661
D650
SENS
CH. REM
CLK
STRB
DATA
IC650
E-6923b
(CP661)
CN680

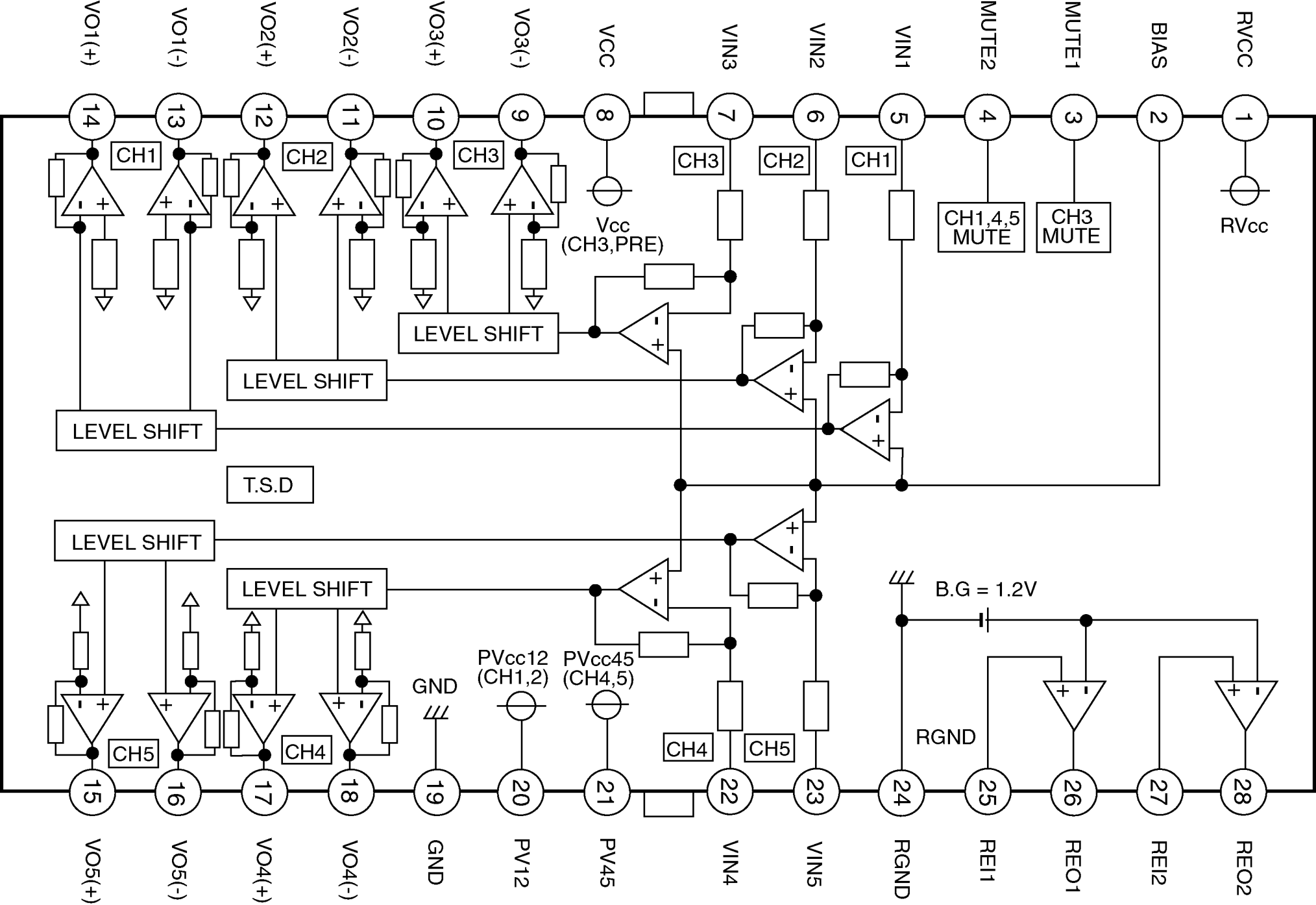
VO1(+)
VO1(-)
VO2(+)
VO2(-)
VO3(+)
VO3(-)
VCC
VIN3
VIN2
VIN1
MUTE2
MUTE1
BIAS
RVCC
14
13
12
11
10
9
8
7
6
5
4
3
2
1
CH1
CH2
CH3
CH3
CH2
CH1
Vcc
(CH3,PRE)
CH1,4,5
MUTE
CH3
MUTE
RVcc
LEVEL SHIFT
LEVEL SHIFT
LEVEL SHIFT
T.S.D
LEVEL SHIFT
LEVEL SHIFT
B.G = 1.2V
PVcc12
(CH1,2)
PVcc45
(CH4,5)
GND
CH5
CH4
CH4
CH5
RGND
15
16
17
18
19
20
21
22
23
24
25
26
27
28
VO5(+)
VO5(-)
VO4(+)
VO4(-)
GND
PV12
PV45
VIN4
VIN5
RGND
REI1
REO1
REI2
REO2

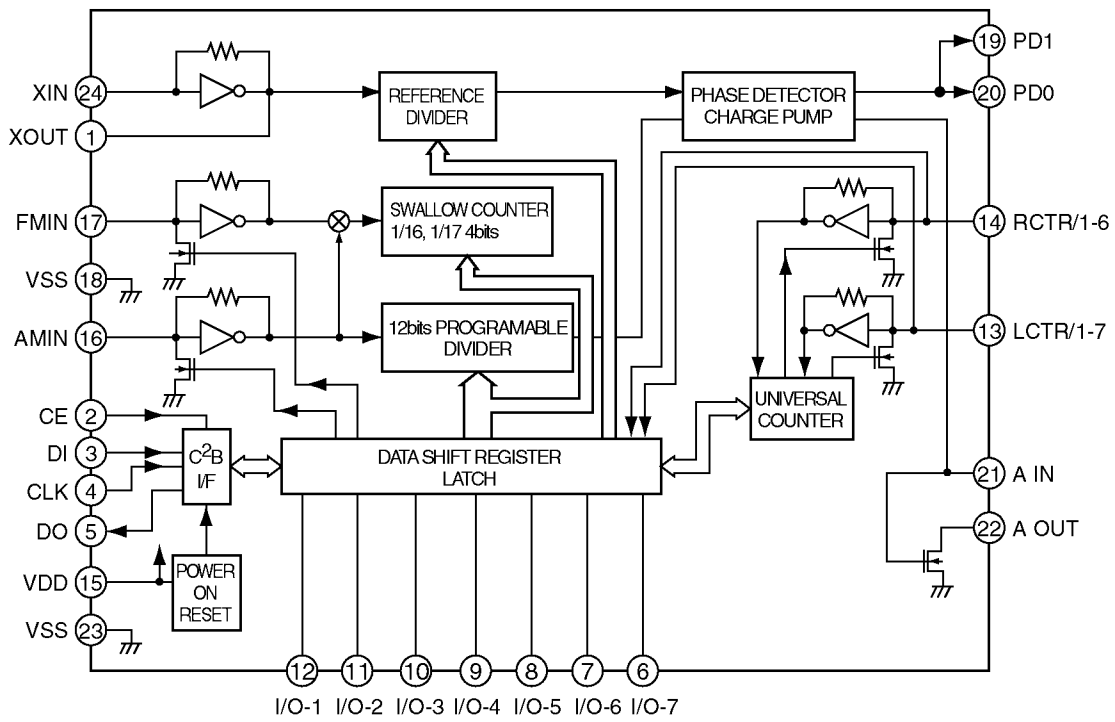
XIN
24
XOUT
1
FMIN
17
VSS
18
AMIN
16
CE
2
DI
3
CLK
4
DO
5
VDD
15
VSS
23
REFERENCE DIVIDER
PHASE DETECTOR CHARGE PUMP
SWALLOW COUNTER 1/16, 1/17 4bits
12bits PROGRAMABLE DIVIDER
C2B I/F
DATA SHIFT REGISTER LATCH
POWER ON RESET
UNIVERSAL COUNTER
19
PD1
20
PD0
14
RCTR/1-6
13
LCTR/1-7
21
A IN
22
A OUT
12
11
10
9
8
7
6
I/O-1
I/O-2
I/O-3
I/O-4
I/O-5
I/O-6
I/O-7

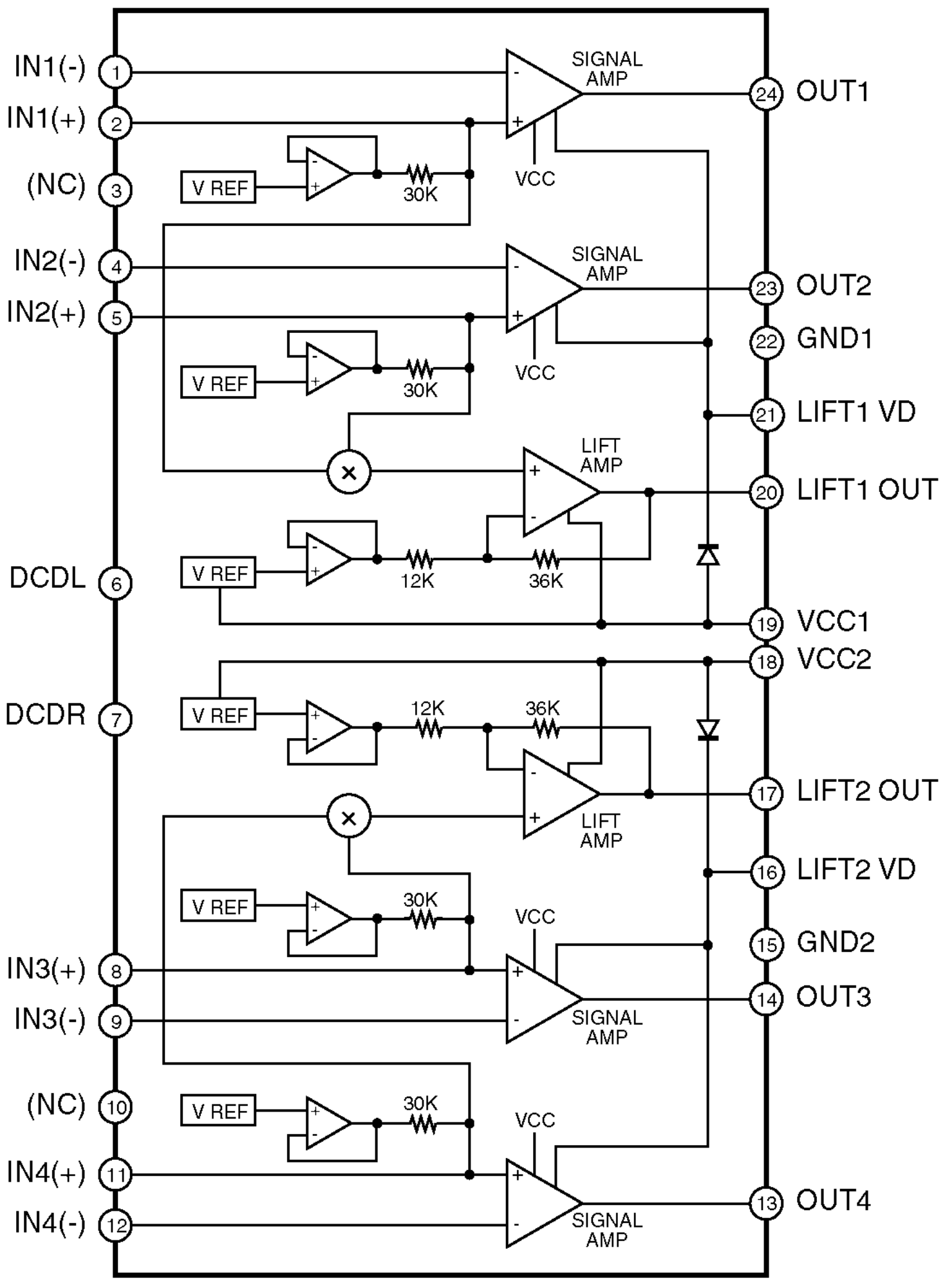
IN1(-)
1
IN1(+)
2
(NC)
3
IN2(-)
4
IN2(+)
5
DCDL
6
DCDR
7
IN3(+)
8
IN3(-)
9
(NC)
10
IN4(+)
11
IN4(-)
12
SIGNAL AMP
VCC
V REF
30K
LIFT AMP
12K
36K
24
OUT1
23
OUT2
22
GND1
21
LIFT1 VD
20
LIFT1 OUT
19
VCC1
18
VCC2
17
LIFT2 OUT
16
LIFT2 VD
15
GND2
14
OUT3
13
OUT4

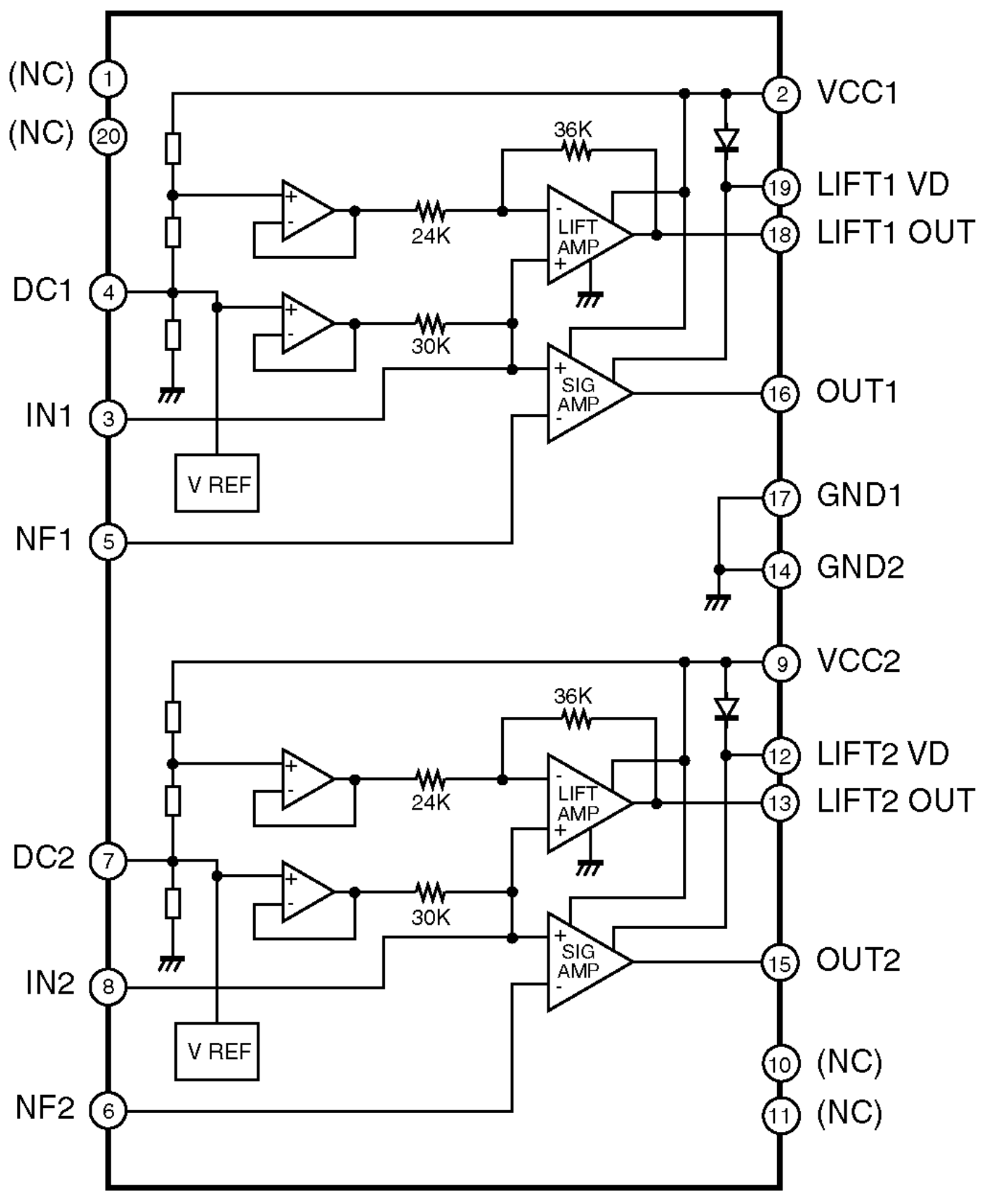
(NC) 1
(NC) 20
DC1 4
IN1 3
NF1 5
DC2 7
IN2 8
NF2 6
2 VCC1
19 LIFT1 VD
18 LIFT1 OUT
16 OUT1
17 GND1
14 GND2
9 VCC2
12 LIFT2 VD
13 LIFT2 OUT
15 OUT2
10 (NC)
11 (NC)
36K
24K
30K
LIFT AMP
SIG AMP
V REF
36K
24K
30K
LIFT AMP
SIG AMP
V REF

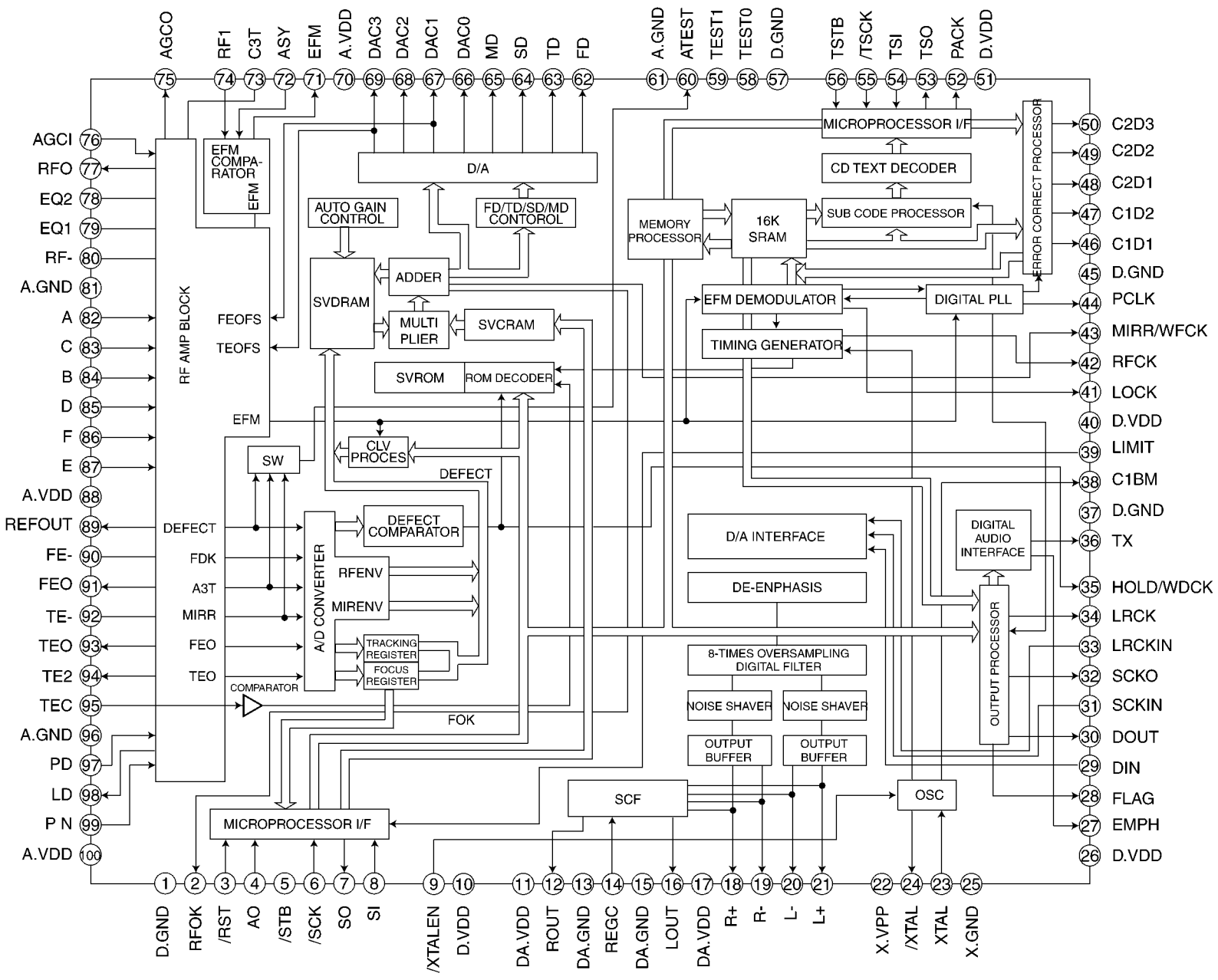
AGCO 75
RF1 74
C3T 73
ASY 72
EFM 71
A.VDD 70
DAC3 69
DAC2 68
DAC1 67
DAC0 66
MD 65
SD 64
TD 63
FD 62
A.GND 61
ATEST 60
TEST1 59
TEST0 58
D.GND 57
TSTB 56
/TSCK 55
TSI 54
TSO 53
PACK 52
D.VDD 51
AGCI 76
RFO 77
EQ2 78
EQ1 79
RF- 80
A.GND 81
A 82
C 83
B 84
D 85
F 86
E 87
A.VDD 88
REFOUT 89
FE- 90
FEO 91
TE- 92
TEO 93
TE2 94
TEC 95
A.GND 96
PD 97
LD 98
P N 99
A.VDD 100
C2D3 50
C2D2 49
C2D1 48
C1D2 47
C1D1 46
D.GND 45
PCLK 44
MIRR/WFCK 43
RFCK 42
LOCK 41
D.VDD 40
LIMIT 39
C1BM 38
D.GND 37
TX 36
HOLD/WDCK 35
LRCK 34
LRCKIN 33
SCKO 32
SCKIN 31
DOUT 30
DIN 29
FLAG 28
EMPH 27
D.VDD 26
D.GND 1
RFOK 2
/RST 3
AO 4
/STB 5
/SCK 6
SO 7
SI 8
/XTALEN 9
D.VDD 10
DA.VDD 11
ROUT 12
DA.GND 13
REGC 14
DA.GND 15
LOUT 16
DA.VDD 17
R+ 18
R- 19
L- 20
L+ 21
X.VPP 22
/XTAL 24
XTAL 23
X.GND 25
RF AMP BLOCK
EFM COMPA-RATOR
EFM
FEOFS
TEOFS
EFM
DEFECT
FDK
A3T
MIRR
FEO
TEO
COMPARATOR
FOK
D/A
AUTO GAIN CONTROL
FD/TD/SD/MD CONTOROL
SVDRAM
ADDER
MULTI PLIER
SVCRAM
SVROM
ROM DECODER
SW
CLV PROCES
DEFECT
DEFECT COMPARATOR
A/D CONVERTER
RFENV
MIRENV
TRACKING REGISTER
FOCUS REGISTER
MICROPROCESSOR I/F
MEMORY PROCESSOR
16K SRAM
MICROPROCESSOR I/F
CD TEXT DECODER
SUB CODE PROCESSOR
ERROR CORRECT PROCESSOR
EFM DEMODULATOR
DIGITAL PLL
TIMING GENERATOR
D/A INTERFACE
DE-ENPHASIS
DIGITAL AUDIO INTERFACE
OUTPUT PROCESSOR
8-TIMES OVERSAMPLING DIGITAL FILTER
NOISE SHAVER
NOISE SHAVER
OUTPUT BUFFER
OUTPUT BUFFER
SCF
OSC
MICROPROCESSOR I/F

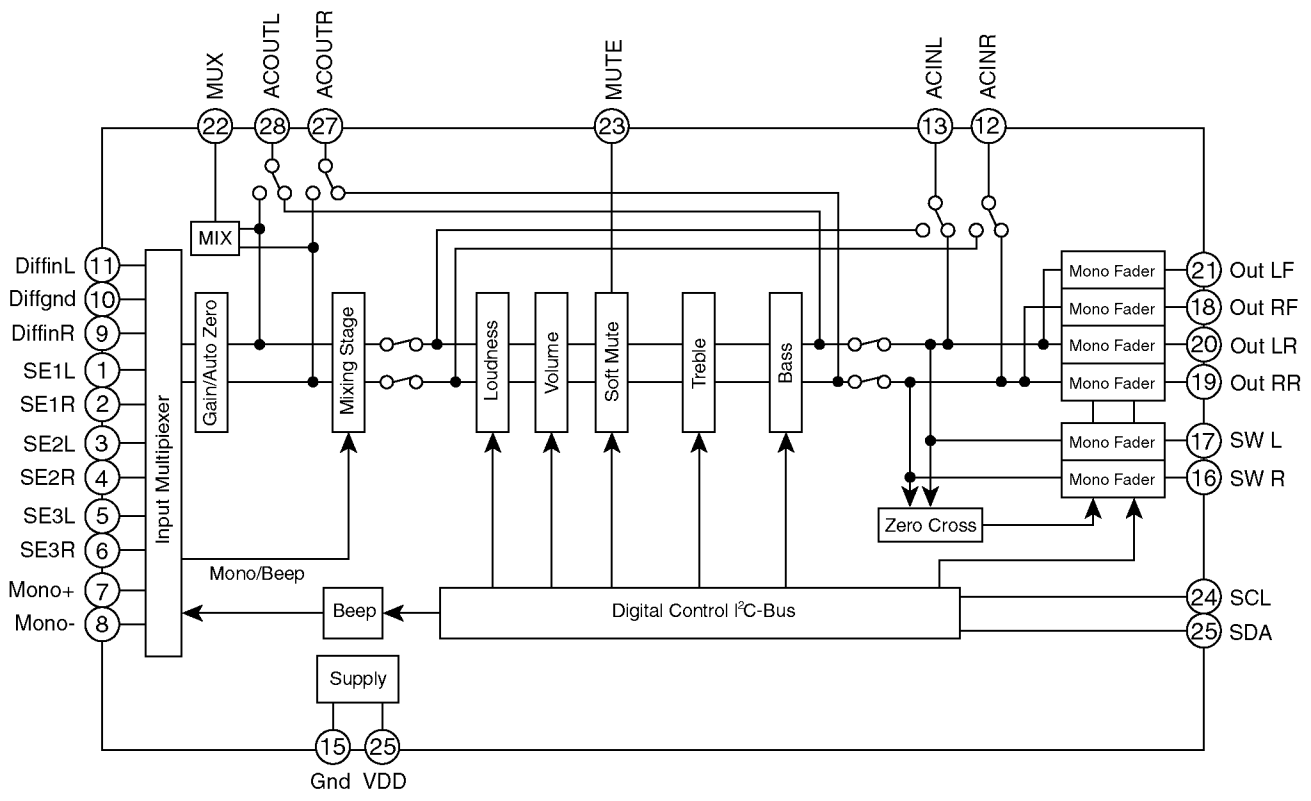
MUX
ACOUTL
ACOUTR
MUTE
ACINL
ACINR
22
28
27
23
13
12
MIX
DiffinL
Diffgnd
DiffinR
SE1L
SE1R
SE2L
SE2R
SE3L
SE3R
Mono+
Mono-
11
10
9
1
2
3
4
5
6
7
8
Input Multipiexer
Gain/Auto Zero
Mixing Stage
Loudness
Volume
Soft Mute
Treble
Bass
Mono Fader
Mono Fader
Mono Fader
Mono Fader
Mono Fader
Mono Fader
21
18
20
19
17
16
Out LF
Out RF
Out LR
Out RR
SW L
SW R
Zero Cross
Mono/Beep
Beep
Digital Control I²C-Bus
24
25
SCL
SDA
Supply
15
25
Gnd
VDD

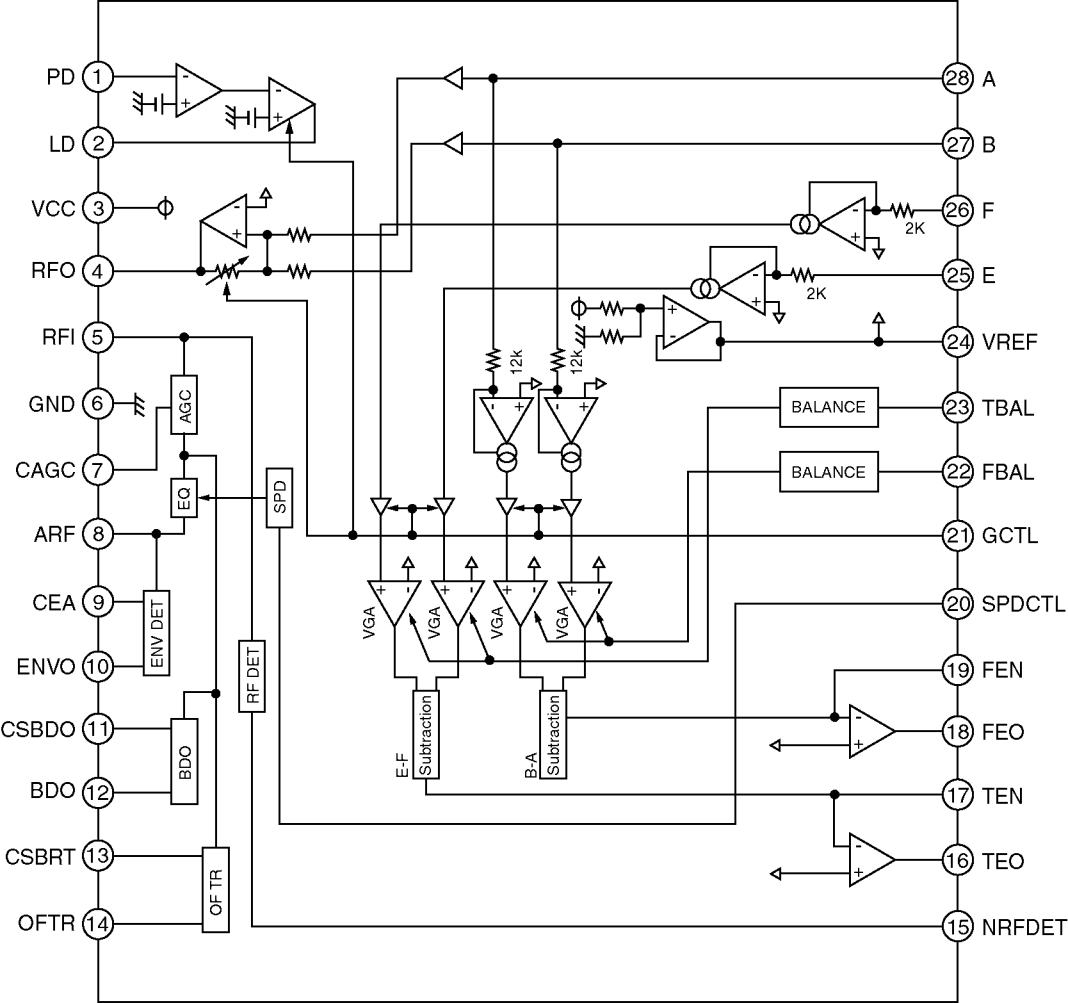
PD 1
LD 2
VCC 3
RFO 4
RFI 5
GND 6
CAGC 7
ARF 8
CEA 9
ENVO 10
CSBDO 11
BDO 12
CSBRT 13
OFTR 14
28 A
27 B
26 F
25 E
24 VREF
23 TBAL
22 FBAL
21 GCTL
20 SPDCTL
19 FEN
18 FEO
17 TEN
16 TEO
15 NRFDET
AGC
EQ
SPD
ENV DET
RF DET
BDO
OF TR
12k
12k
2K
2K
BALANCE
BALANCE
VGA
VGA
VGA
VGA
E-F Subtraction
B-A Subtraction

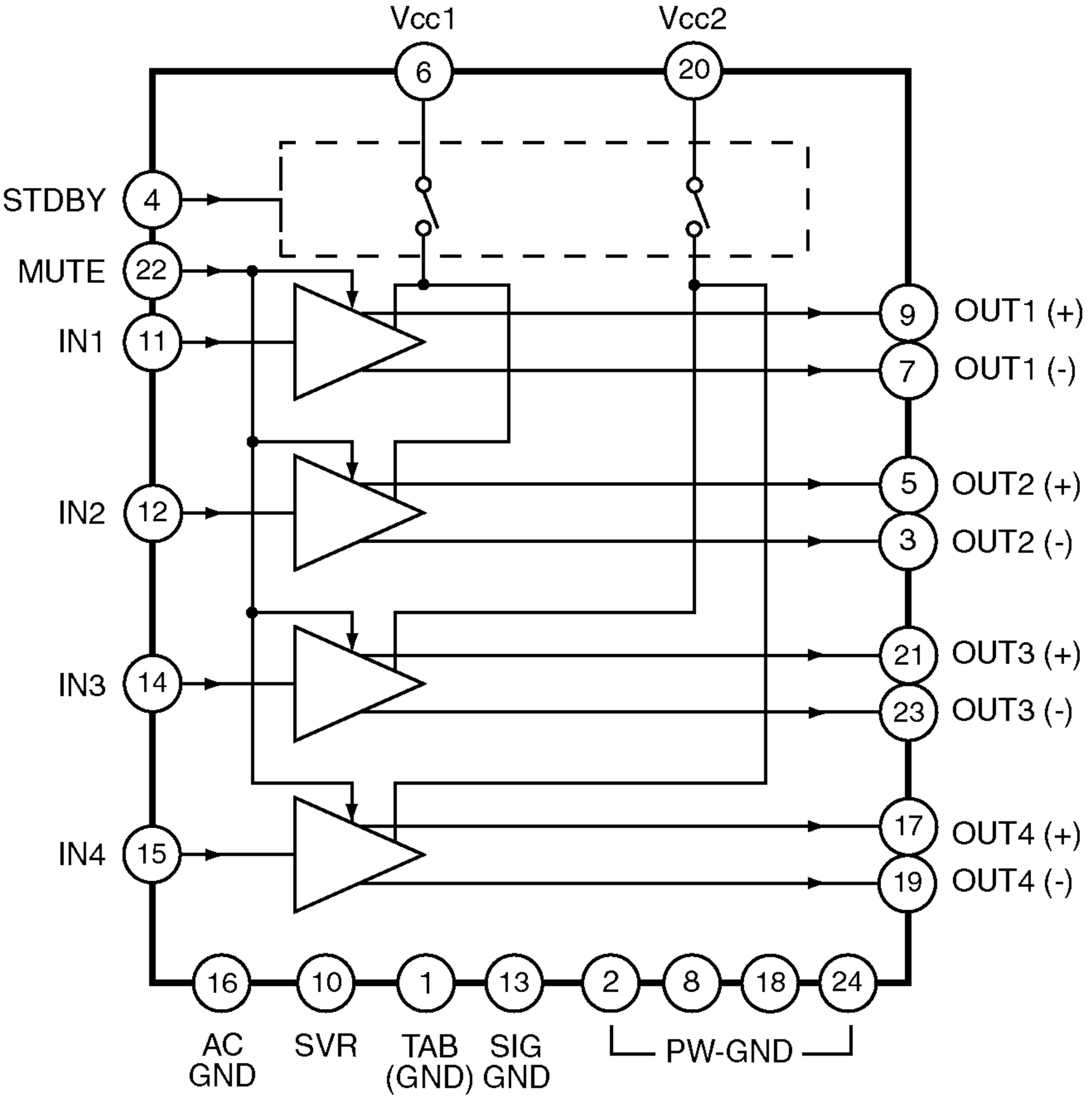
Vcc1
Vcc2
6
20
STDBY
4
MUTE
22
IN1
11
IN2
12
IN3
14
IN4
15
9
OUT1 (+)
7
OUT1 (-)
5
OUT2 (+)
3
OUT2 (-)
21
OUT3 (+)
23
OUT3 (-)
17
OUT4 (+)
19
OUT4 (-)
16
10
1
13
2
8
18
24
AC GND
SVR
TAB (GND)
SIG GND
PW-GND

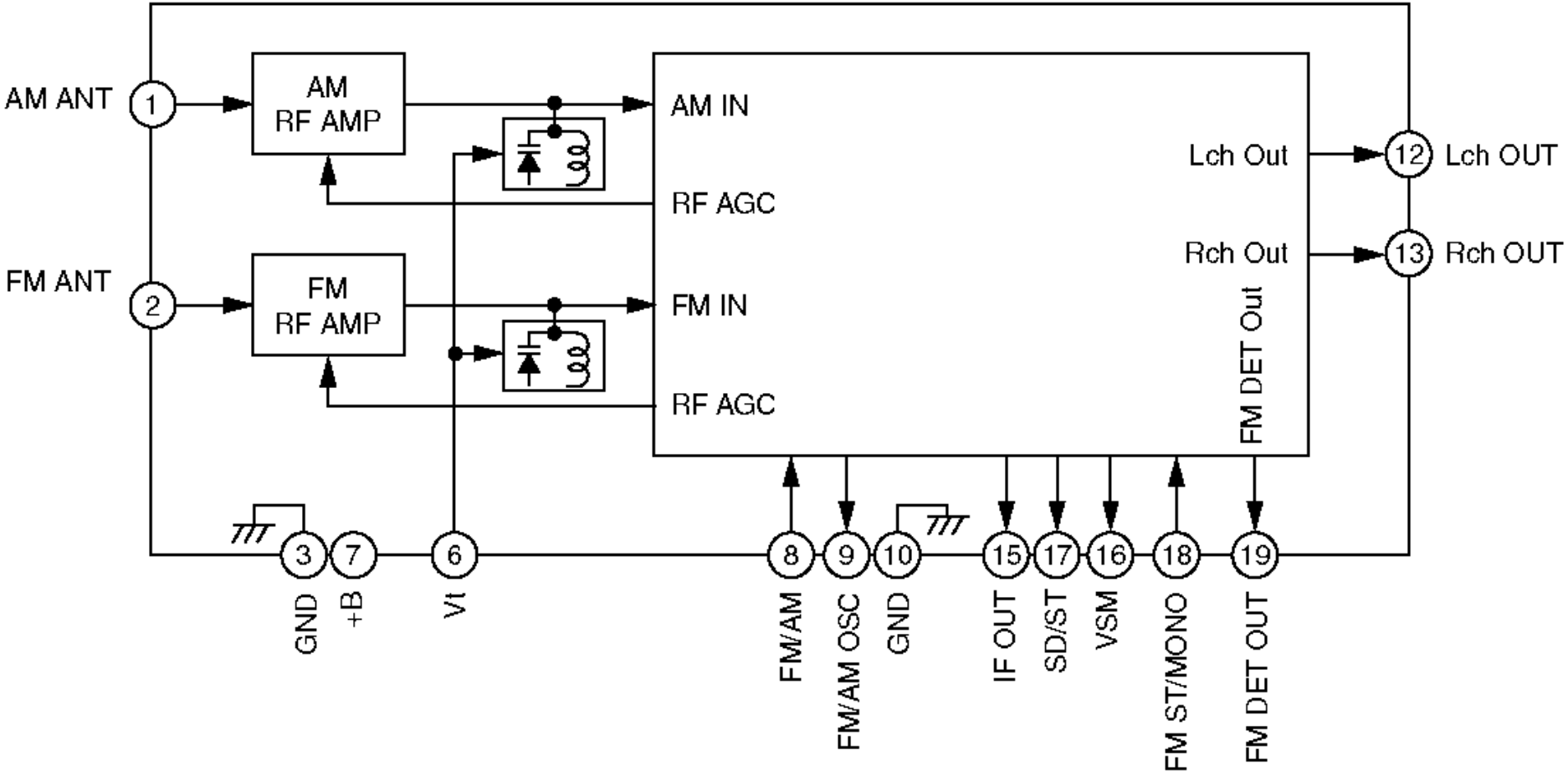
AM ANT
1
AM
RF AMP
AM IN
RF AGC
FM ANT
2
FM
RF AMP
FM IN
RF AGC
Lch Out
Rch Out
FM DET Out
12
Lch OUT
13
Rch OUT
3
7
6
8
9
10
15
17
16
18
19
GND
+B
Vt
FM/AM
FM/AM OSC
GND
IF OUT
SD/ST
VSM
FM ST/MONO
FM DET OUT

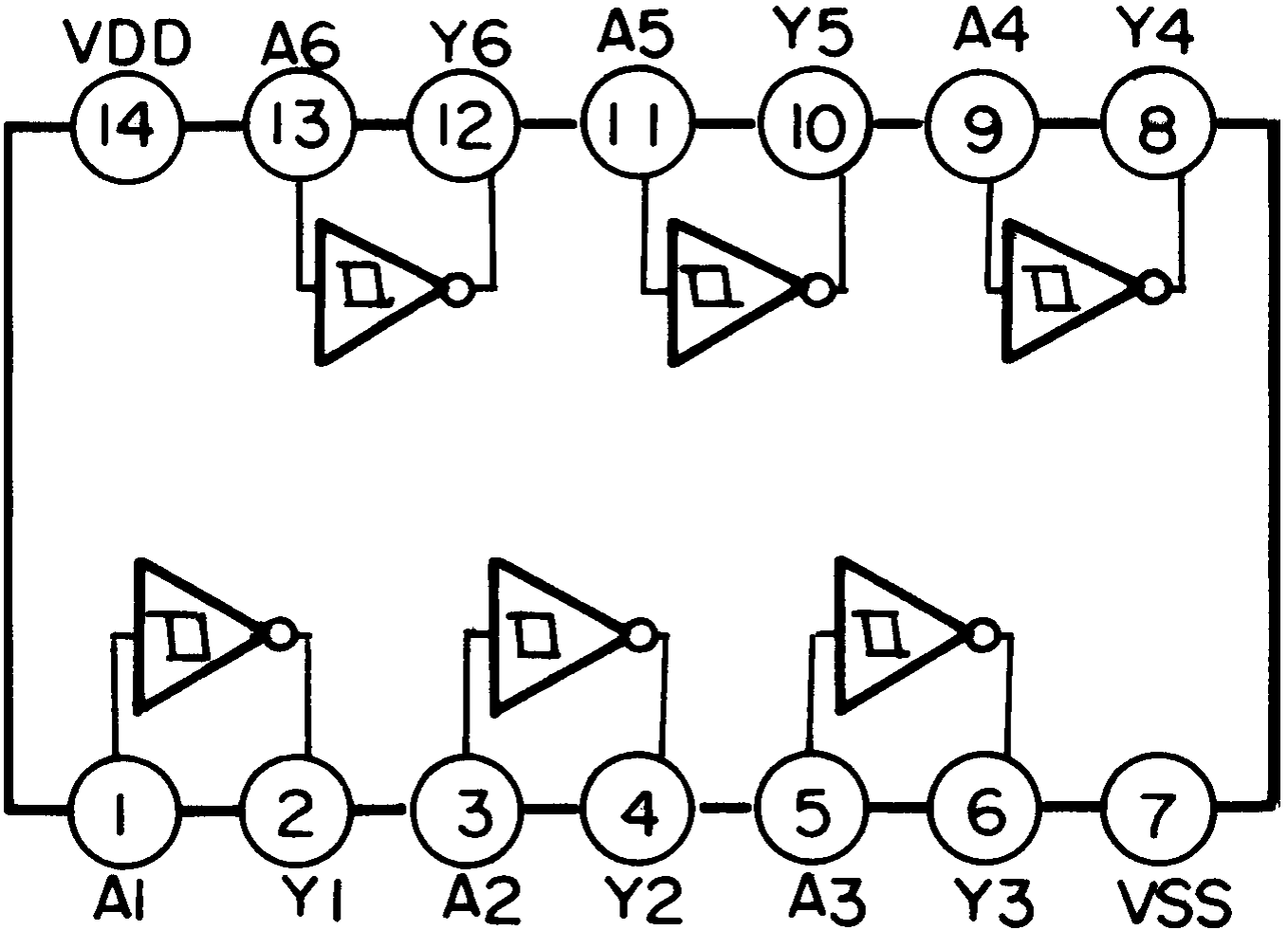
VDD
A6
Y6
A5
Y5
A4
Y4
14
13
12
11
10
9
8
1
2
3
4
5
6
7
A1
Y1
A2
Y2
A3
Y3
VSS

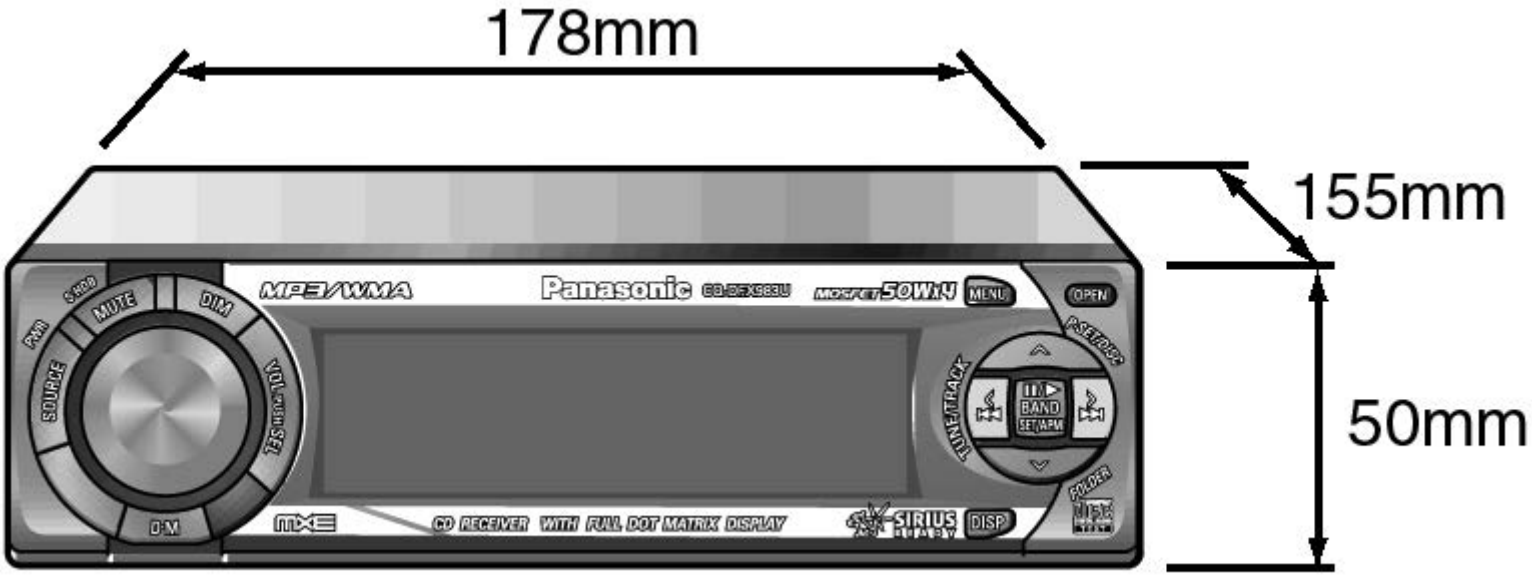
178mm
155mm
50mm
MP3/WMA
Panasonic
CD-DEX983U
MOSFET 50Wx4
MENU
OPEN
P.SET/DISP
SHUF
MUTE
DIM
PWR
SOURCE
VOL PUSH SET
TUNE/TRACK
BAND
SET/APM
FOLDER
D-M
CD RECEIVER WITH FULL DOT MATRIX DISPLAY
SIRIUS
DISP

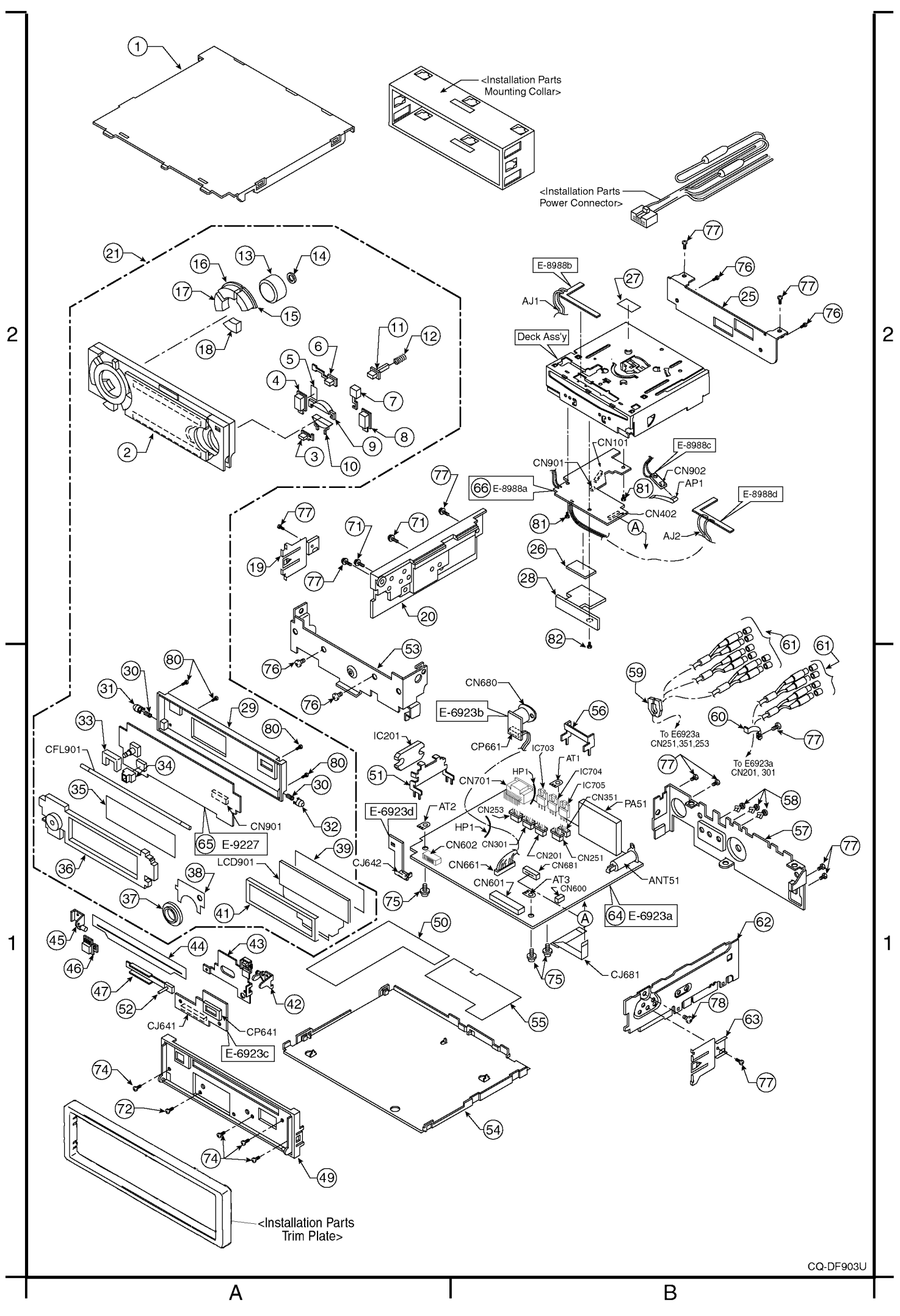
1
<Installation Parts Mounting Collar>
<Installation Parts Power Connector>
21
16
13
14
17
15
18
2
11
12
6
5
4
7
8
9
3
10
E-8988b
AJ1
27
Deck Ass'y
77
76
25
CN101
E-8988c
CN901
CN902
AP1
66 E-8988a
81
E-8988d
CN402
A
AJ2
26
28
82
19
71
20
53
61
59
60
To E6923a CN251,351,253
To E6923a CN201, 301
58
57
80
30
31
29
33
CFL901
34
35
CN901
32
65 E-9227
36
LCD901
39
38
37
41
45
46
44
43
47
52
42
CJ641
CP641
E-6923c
74
72
49
<Installation Parts Trim Plate>
CN680
E-6923b
CP661
IC703
IC201
51
CN701
HP1
AT1
IC704
IC705
CN351
PA51
E-6923d
AT2
CN253
HP1
CN602
CN301
CN201
CN251
CJ642
CN661
CN681
CN601
AT3
CN600
ANT51
75
64 E-6923a
50
CJ681
62
78
63
55
54

CQ-DF903U

A B

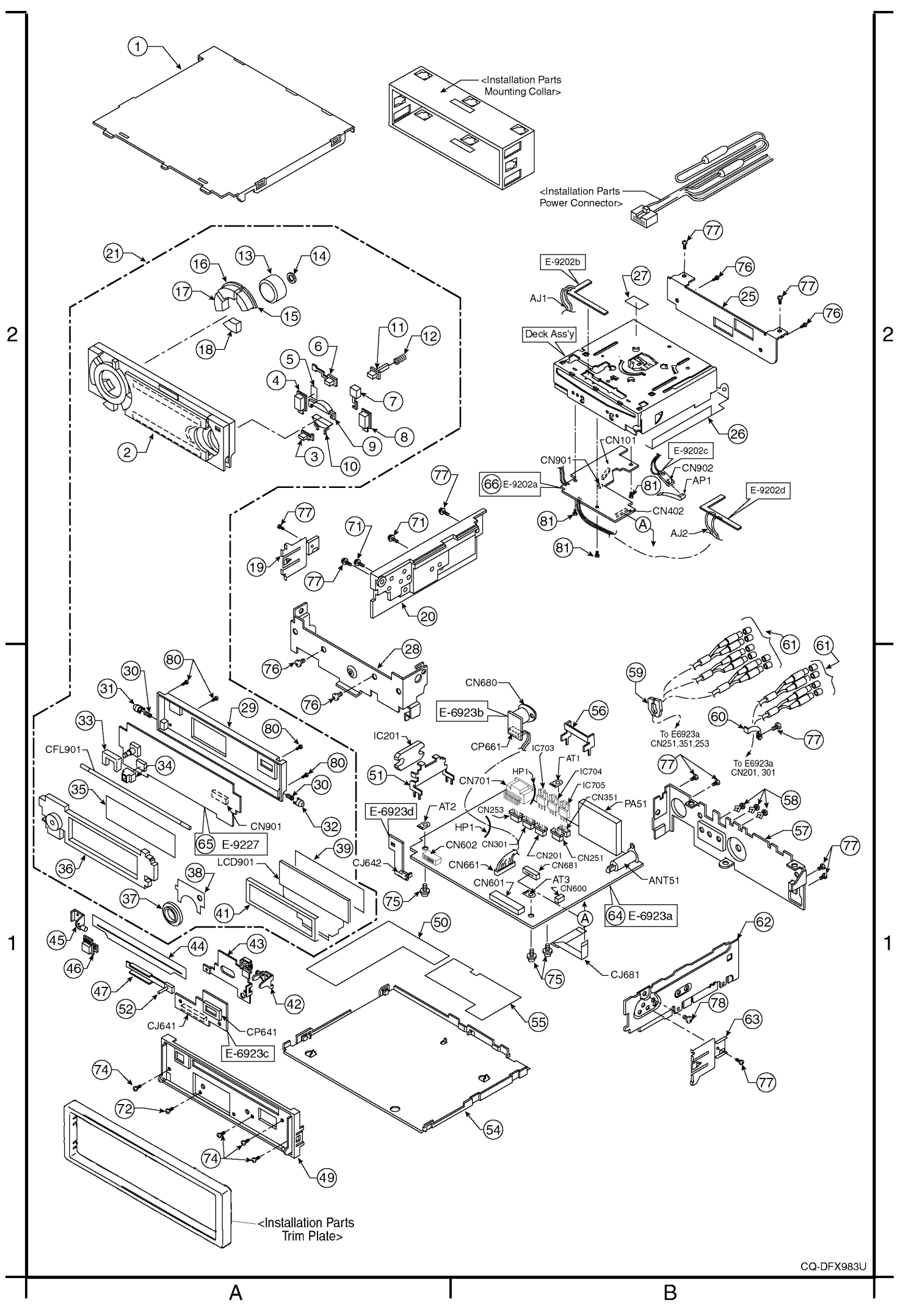
<Installation Parts Mounting Collar>
<Installation Parts Power Connector>
E-9202b
AJ1
Deck Ass'y
CN101
E-9202c
CN902
AP1
CN901
66 E-9202a
CN402
E-9202d
AJ2
CN680
E-6923b
CP661
IC703
IC201
CFL901
CN701
HP1
IC704
IC705
CN351
PA51
E-6923d
AT2
CN253
CN301
CN602
CN661
CN601
CN201
CN251
CN681
AT3
CN600
ANT51
CJ642
CJ681
64 E-6923a
65 E-9227
LCD901
CN901
To E6923a CN251,351,253
To E6923a CN201, 301
CJ641
CP641
E-6923c
<Installation Parts Trim Plate>

CQ-DFX983U

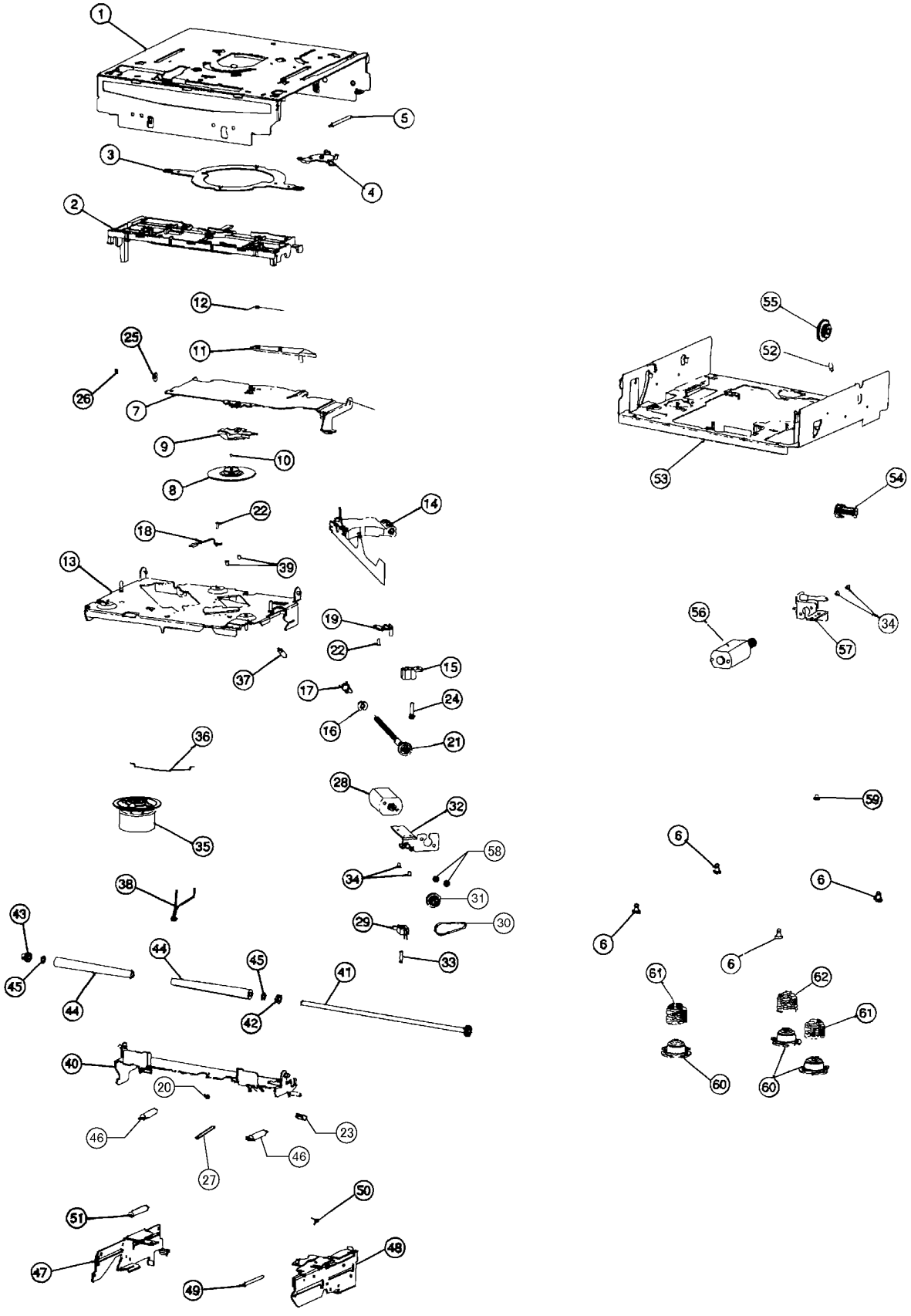
1
5
3
4
2
12
25
11
26
7
9
10
8
22
14
18
39
13
19
22
37
15
17
24
16
21
36
28
32
35
58
34
31
38
29
30
43
33
44
45
45
41
44
42
40
20
46
23
46
27
50
51
47
48
49
55
52
53
54
56
34
57
59
6
6
6
6
61
62
61
60
60

NCD8
'01.12

CAUTION:

This product utilizes a laser diode with the unit turned "on", laser radiation is emitted from the pickup lens.

Laser radiation from the pickup lens is safety level, but be sure the followings:

1. Do not disassemble the optical pickup unit, since radiation from exposed laser diode is dangerous.
2. Do not adjust the variable resistor on the pickup unit. It was already adjusted.
3. Do not look at the focus lens using optical instruments.
4. Recommend not to look at pickup lens for a long time.

DANGER! Invisible laser radiation when open. Avoid direct exposure to beam.

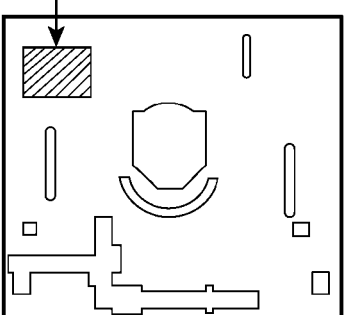

Deck Ass'y (Upper Side)

Caution

This Product utilizes a laser.

Use of controls or adjustments or performance of procedures other than those specified herein may result in hazardous radiation exposure.

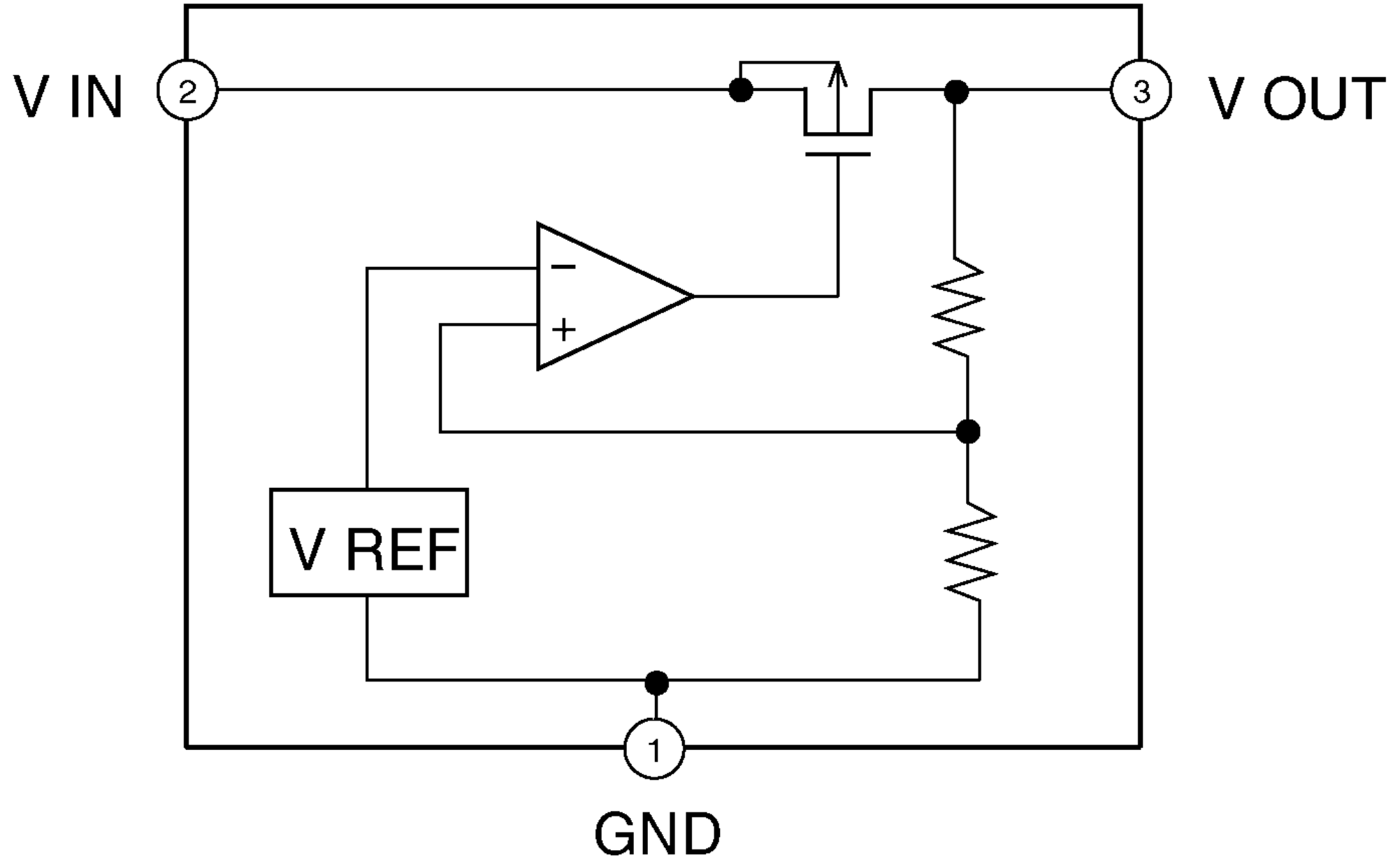
V IN
2
3
V OUT
−
+
V REF
1
GND

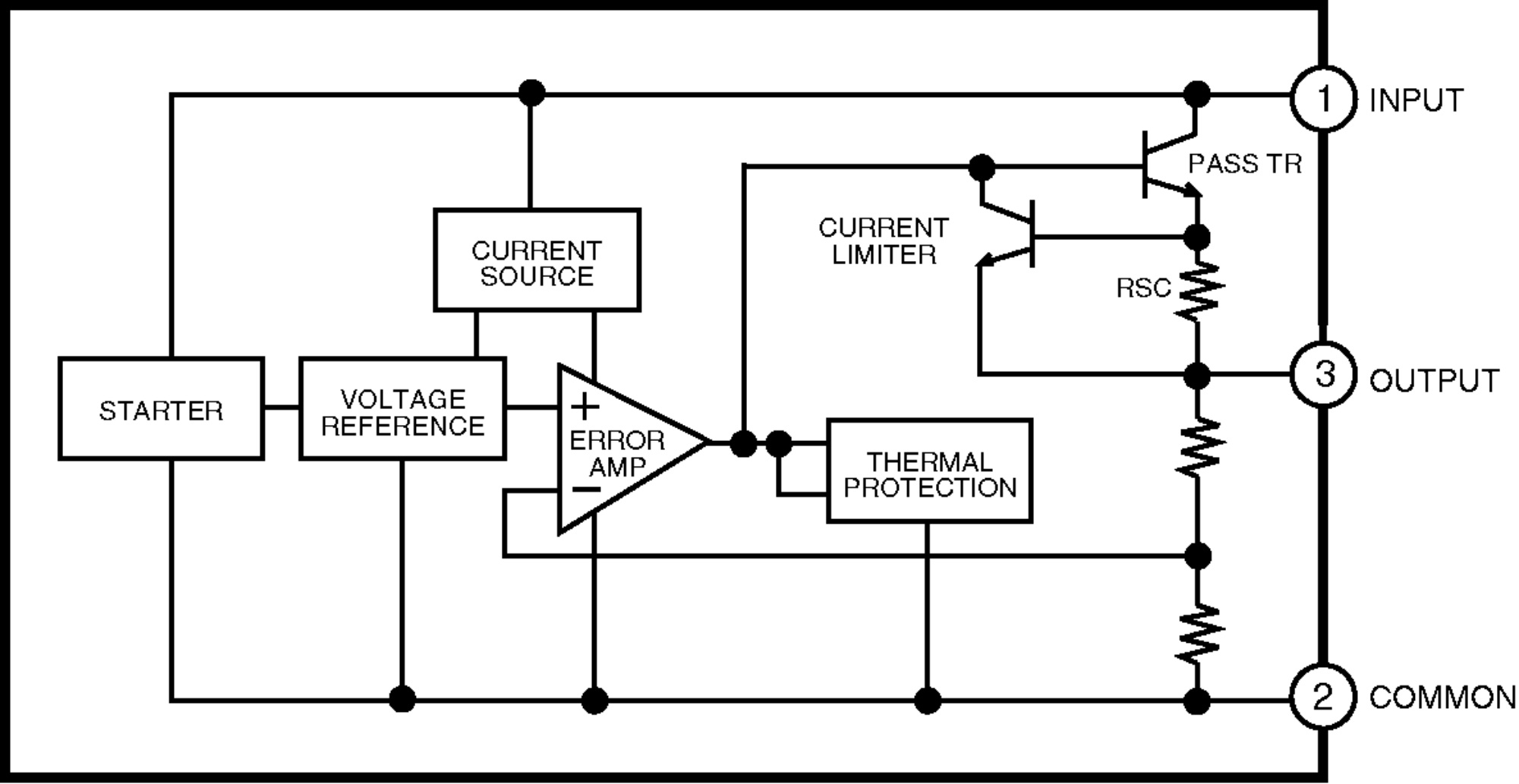
1
INPUT
PASS TR
CURRENT
LIMITER
CURRENT
SOURCE
RSC
3
OUTPUT
STARTER
VOLTAGE
REFERENCE
+
ERROR
AMP
−
THERMAL
PROTECTION
2
COMMON

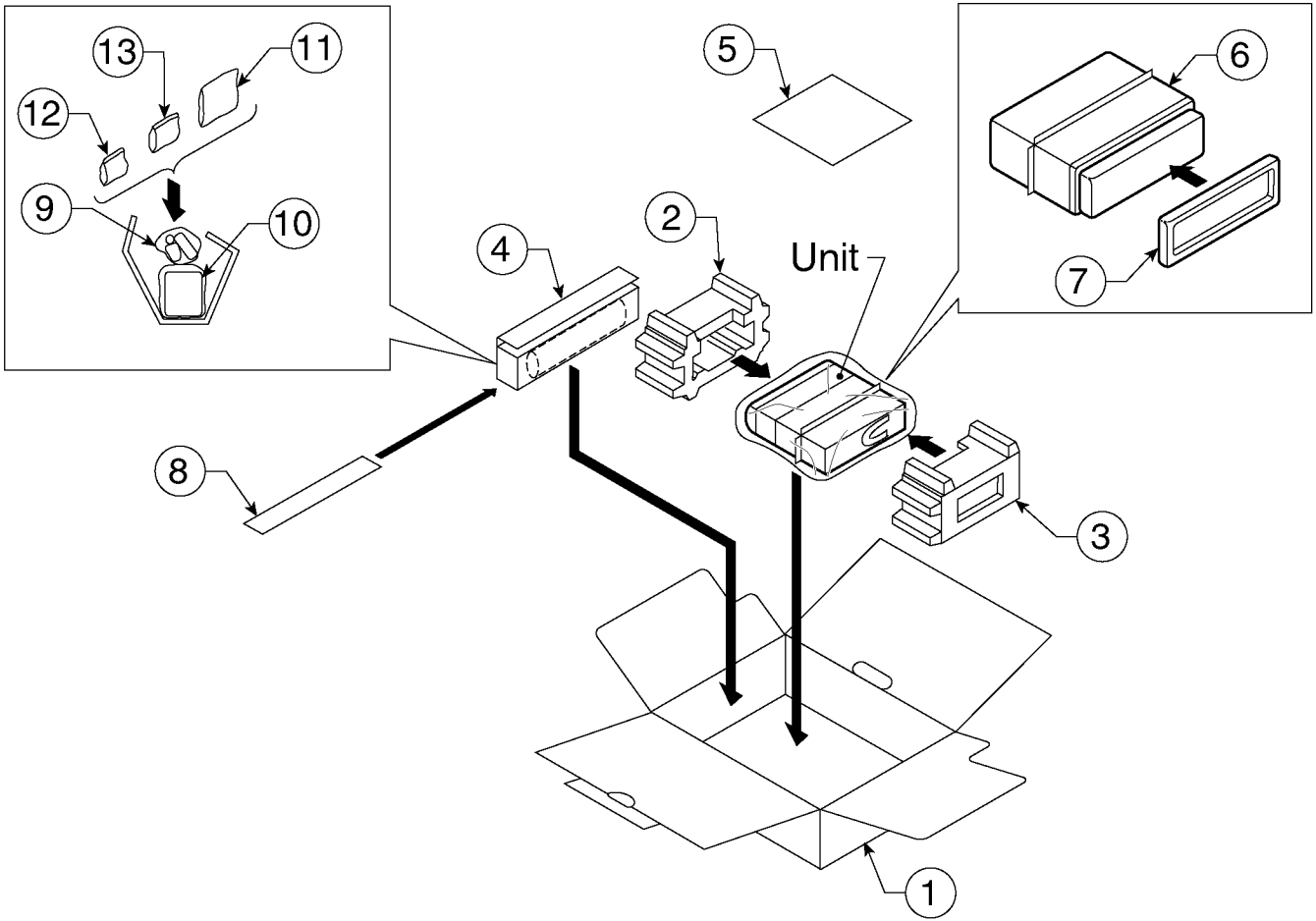
13
11
12
9
10
5
6
2
4
Unit
7
8
3
1

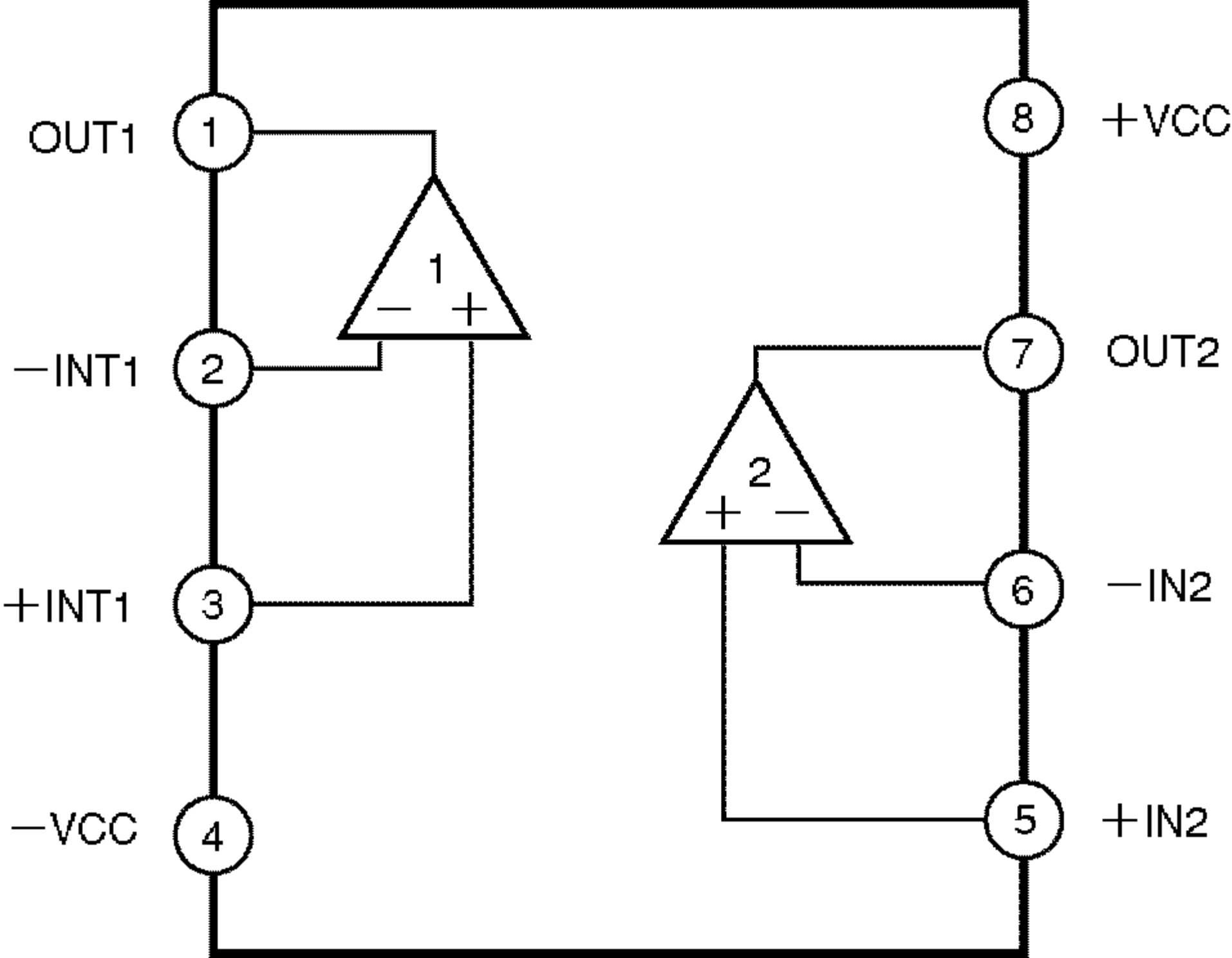
OUT1
1
−INT1
2
+INT1
3
−VCC
4
8
+VCC
7
OUT2
6
−IN2
5
+IN2
1
2

21.5. CD Servo Block [CQ-DF903U]

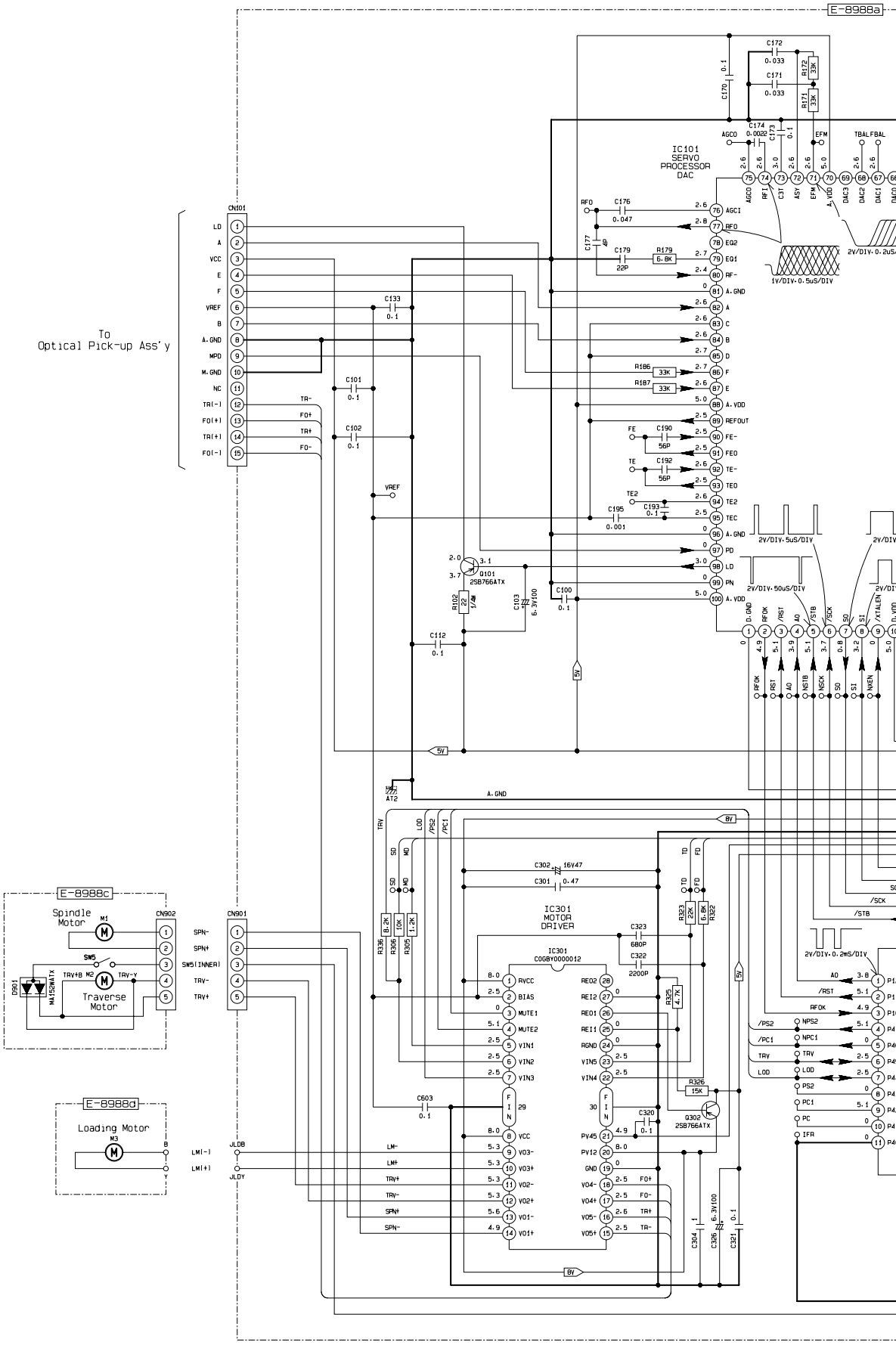

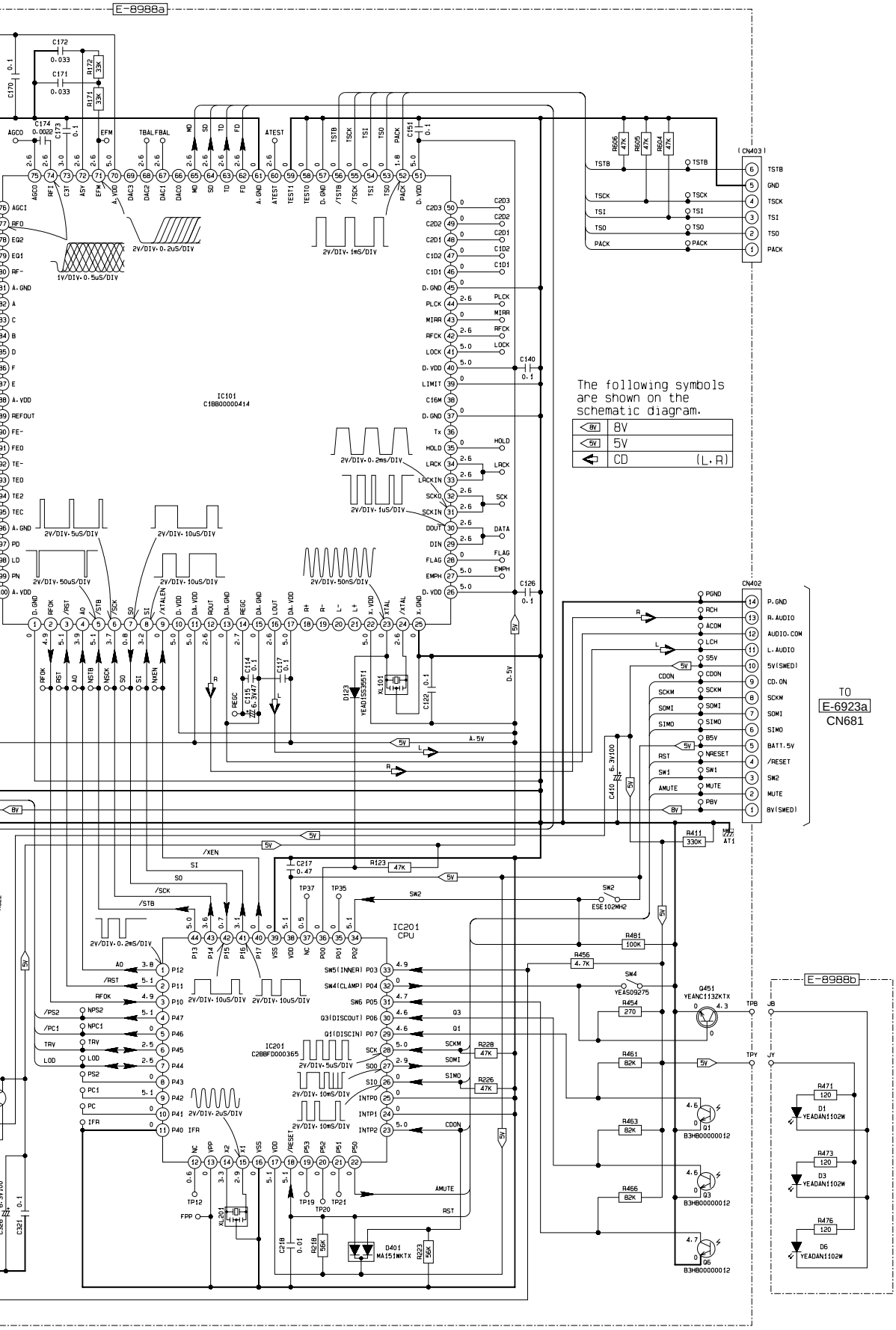

CQ-DF903U CD DECK (NCD8)

Printed in Japan (K) 2003. 1 (Recycled Paper)

21.4. CD Servo Block [CQ-DFX983U]

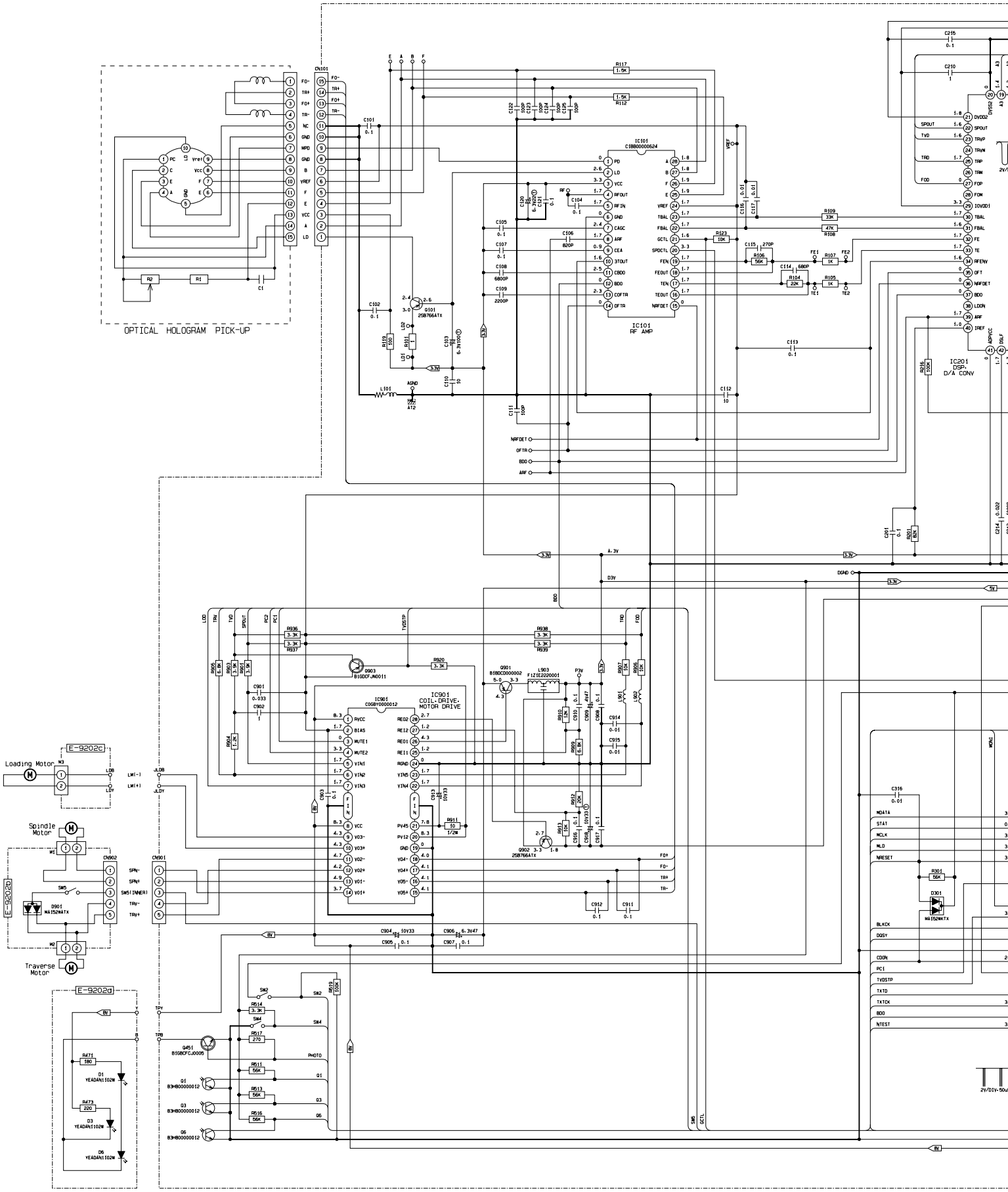

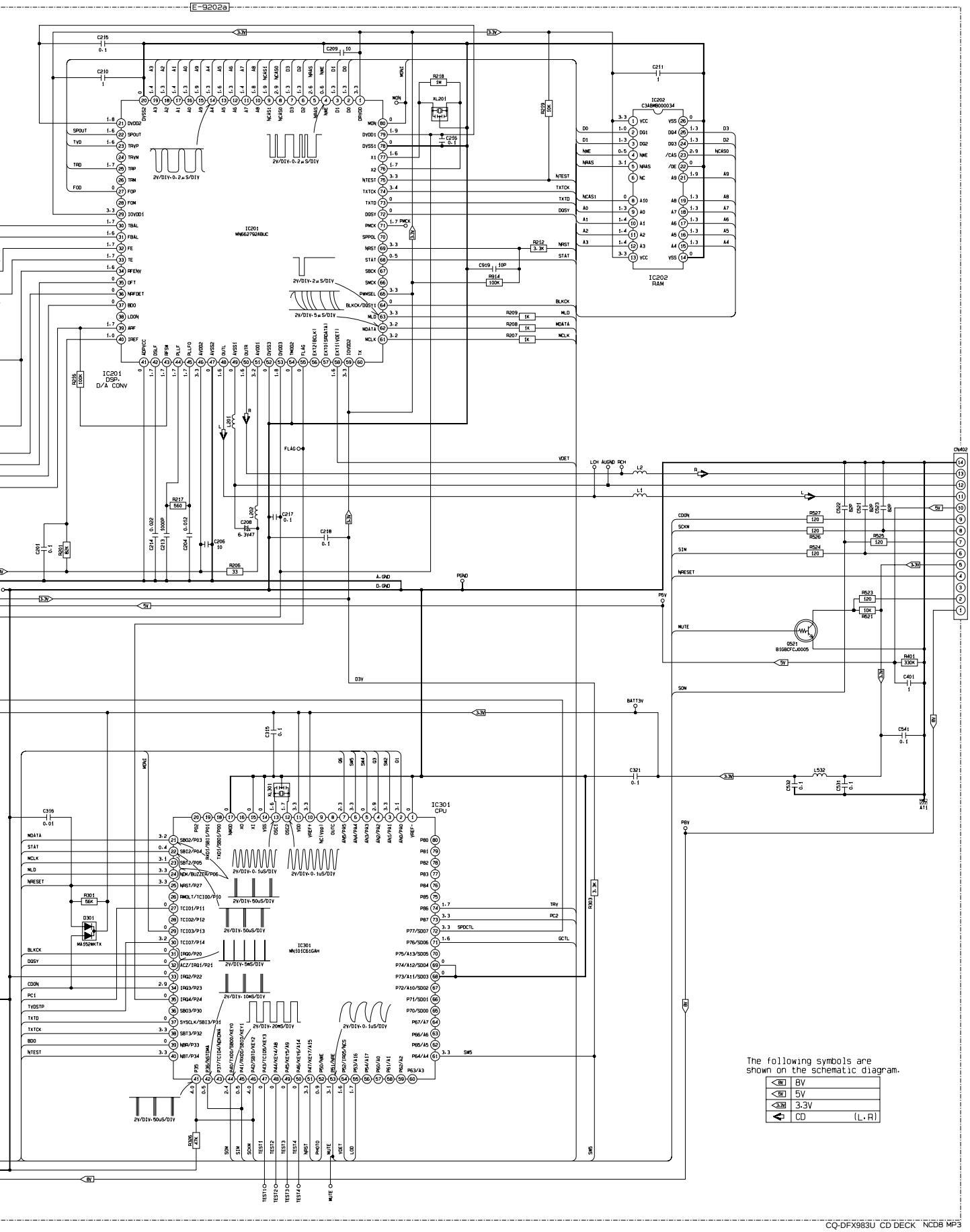
E-9202a
IC201
MN66279248UC
IC201
DSP,
D/A CONV
IC202
C3AB9000034
IC202
RAM
IC301
CPU
IC301
MN101C01GAH
CN402
TO E-9202a CN401
The following symbols are
shown on the schematic diagram.
8V
5V
3.3V
CD (L,R)

21.3. Display Block

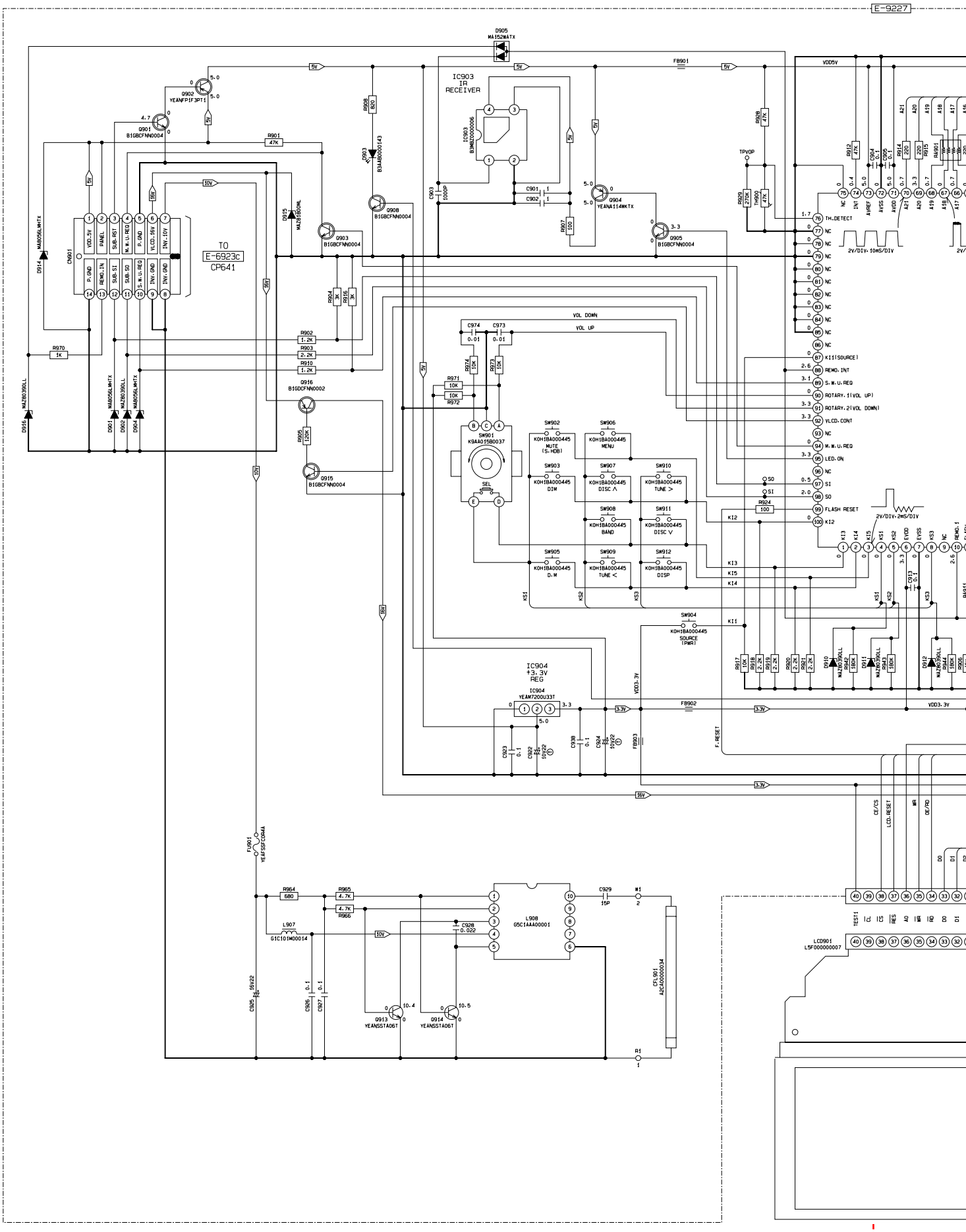

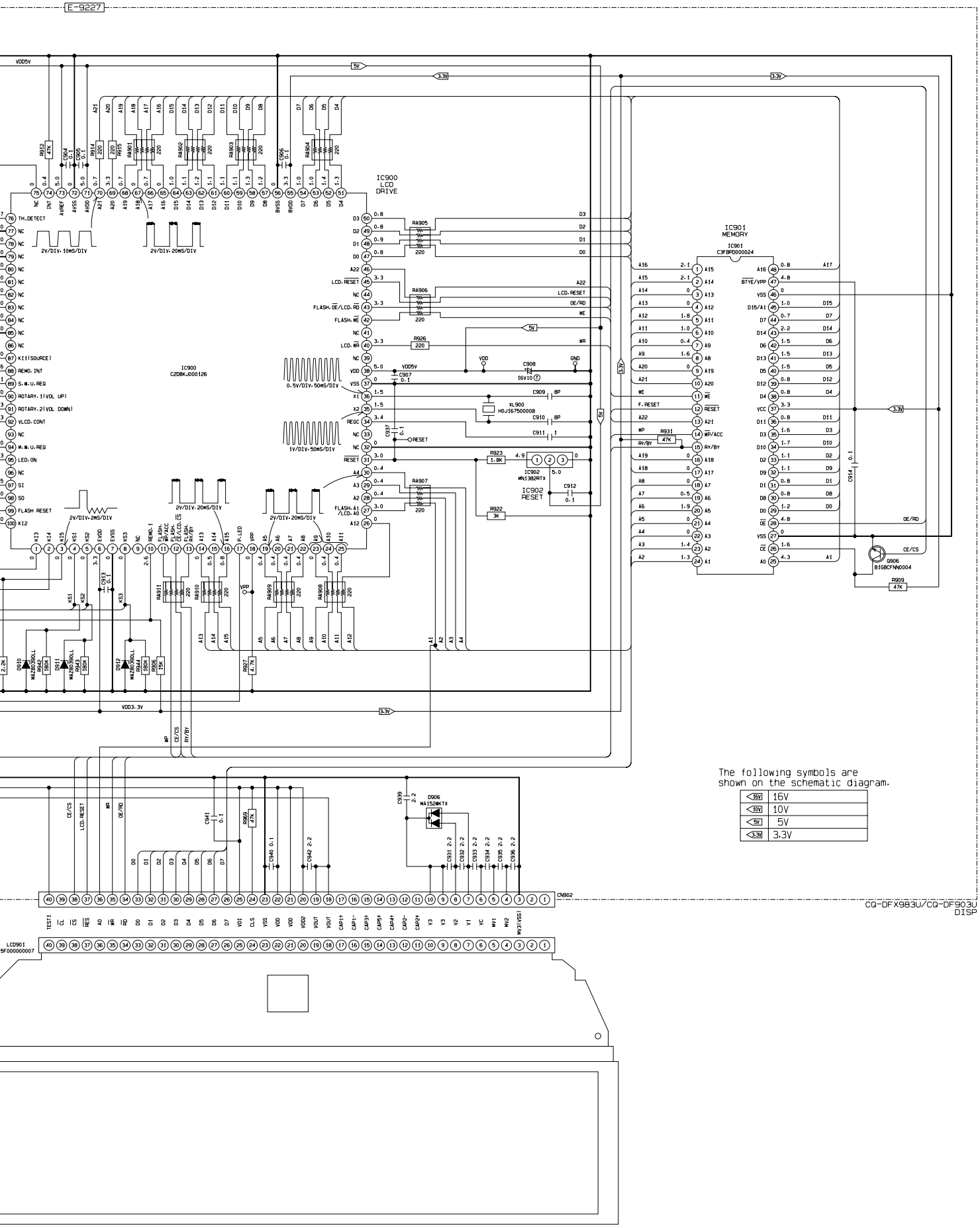

The following symbols are shown on the schematic diagram.

16V	16V
10V	10V
5V	5V
3.3V	3.3V

CQ-DFX983U/CQ-DF903U
DISP

21.2. Main Block [CQ-DF903U]

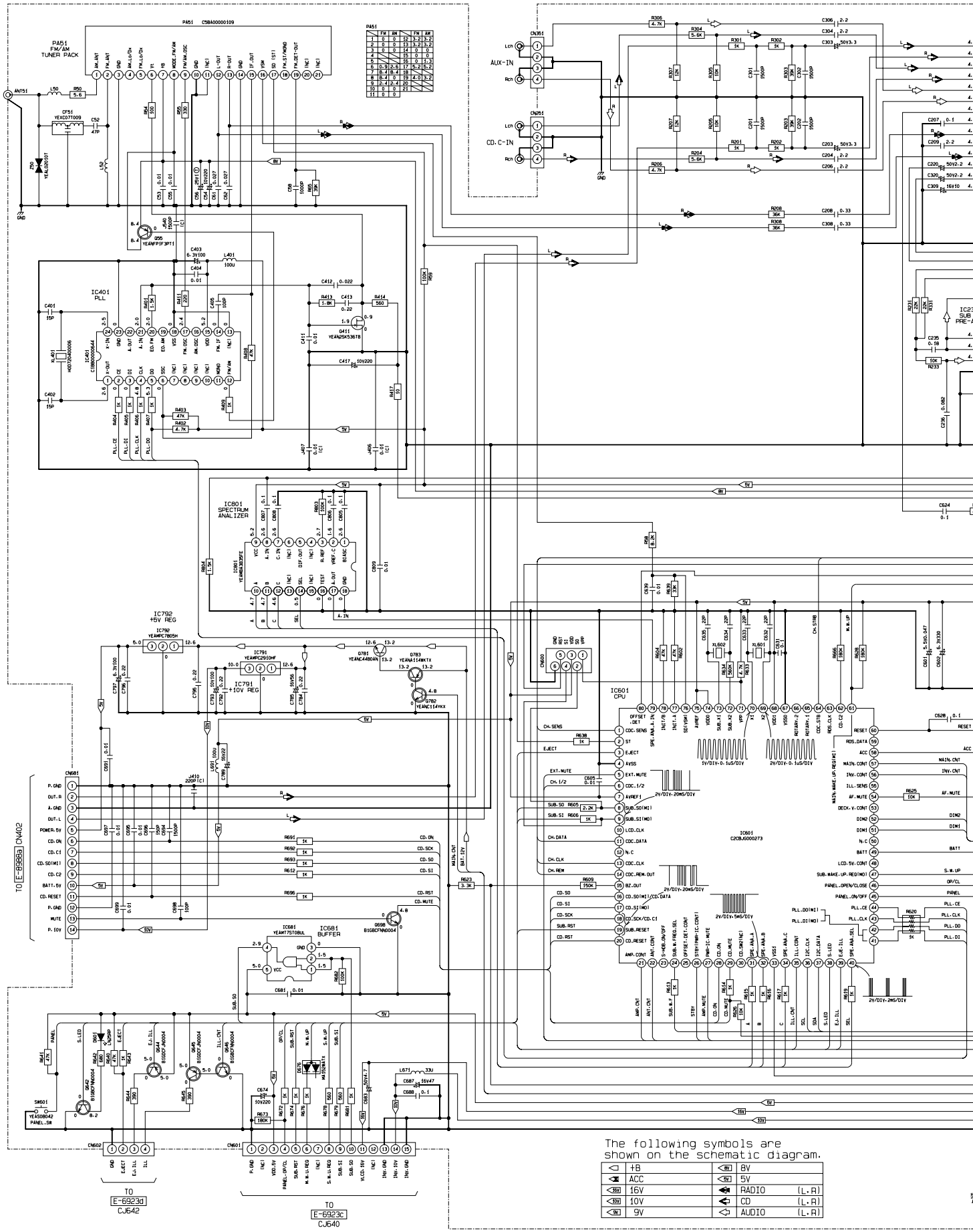

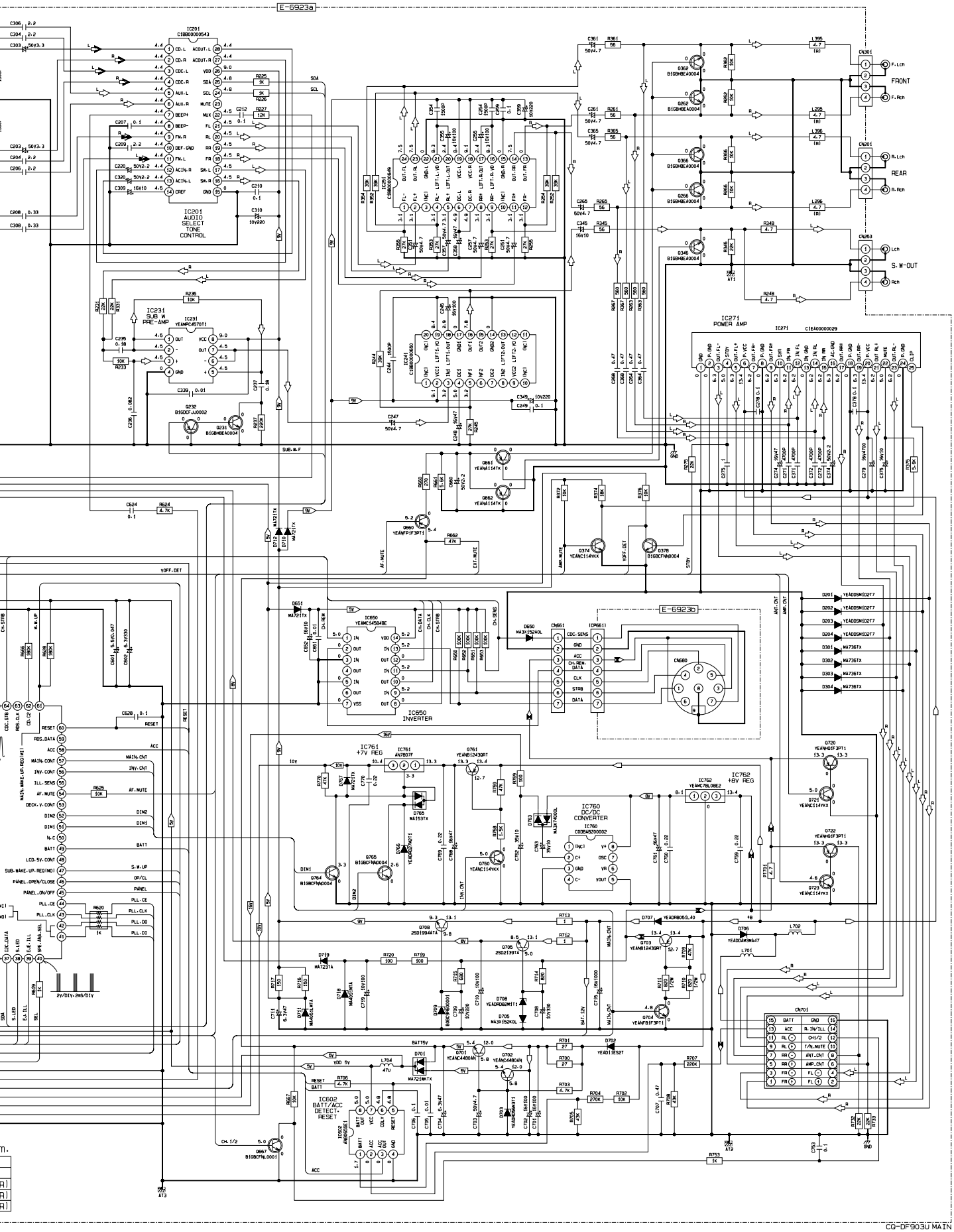
E-6923a
E-6923b
IC201
AUDIO
SELECT
TONE
CONTROL
IC231
SUB W
PRE-AMP
IC271
POWER AMP
IC650
INVERTER
IC761
+7V REG
IC762
+8V REG
IC760
DC/DC
CONVERTER
IC602
BATT/ACC
DETECT·
RESET
FRONT
REAR
S.W-OUT
CN301
CN201
CN653
CN701
CN661
CN680
SDA
SCL
SUB.W.F
VOFF.DET
AF.MUTE
EXT.MUTE
AMP.MUTE
STBY
ANT.CNT
AMP.CNT
MAIN.CNT
INV.CNT
RESET
ACC
BATT
DIM1
DIM2
PANEL
PLL.CE
PLL.CLK
PLL.DO
PLL.DI
2V/DIV·2MS/DIV

21 SCHEMATIC DIAGRAM-2

21.1. Main Block [CQ-DFX983U]

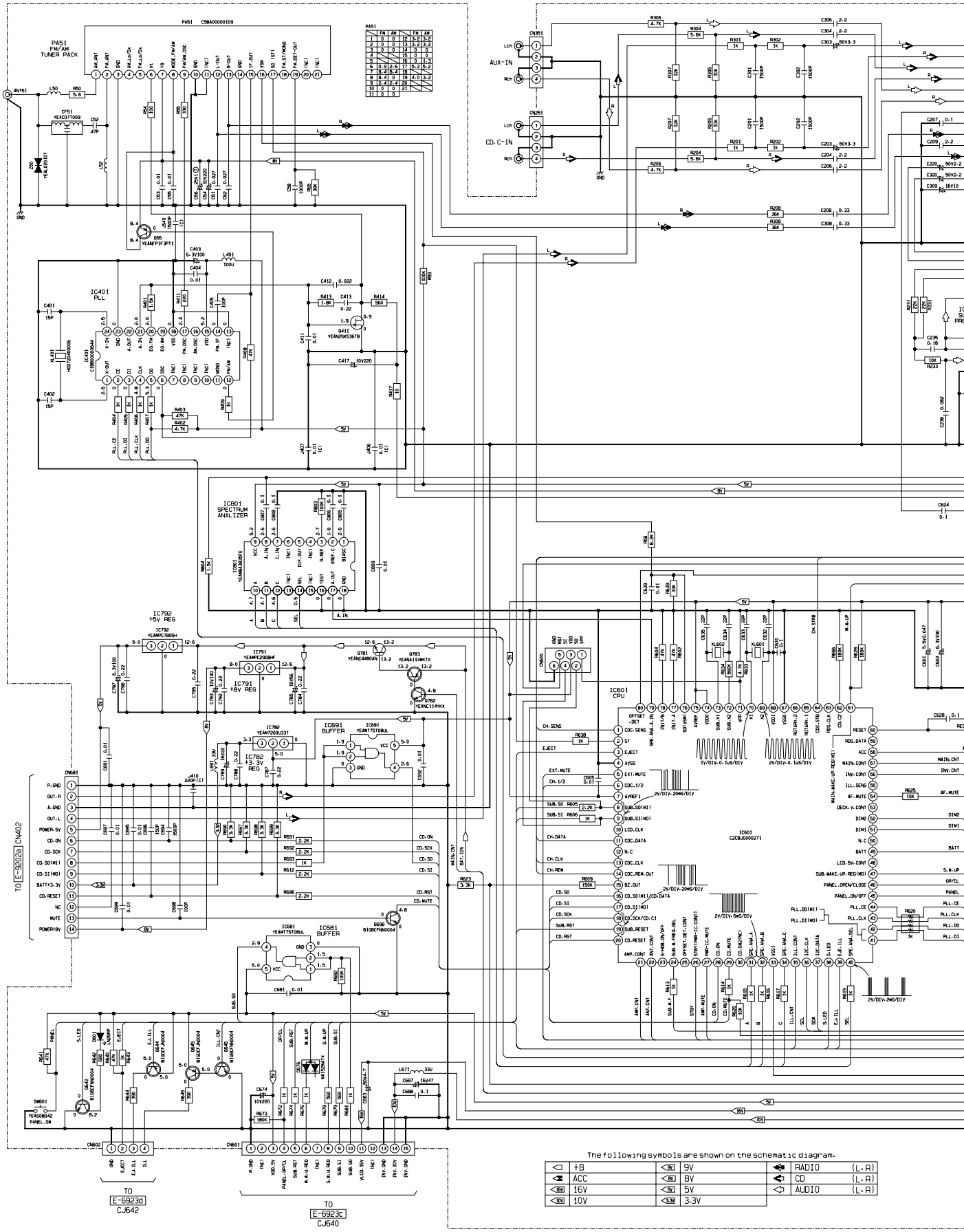

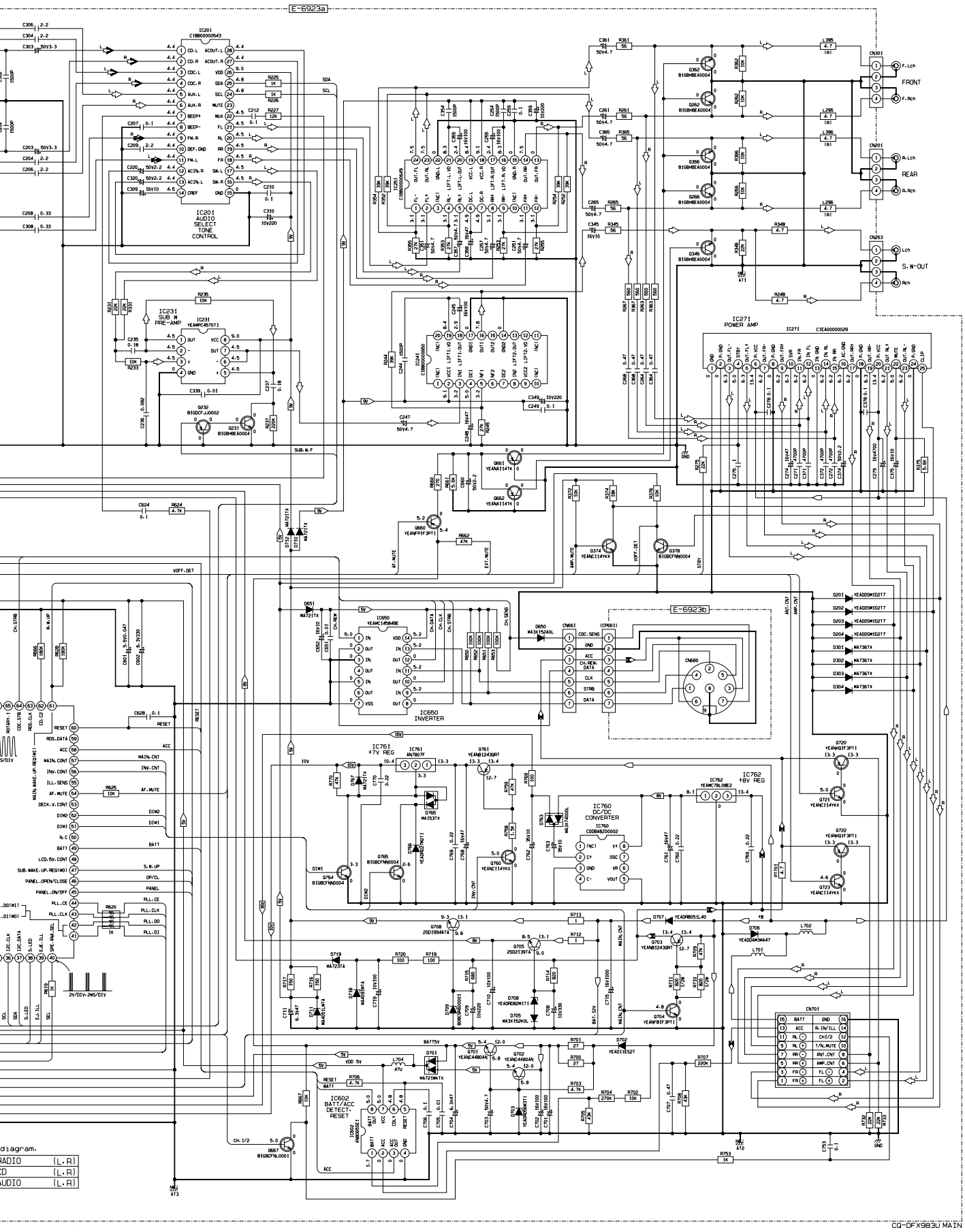

CQ-DFX983U MAIN

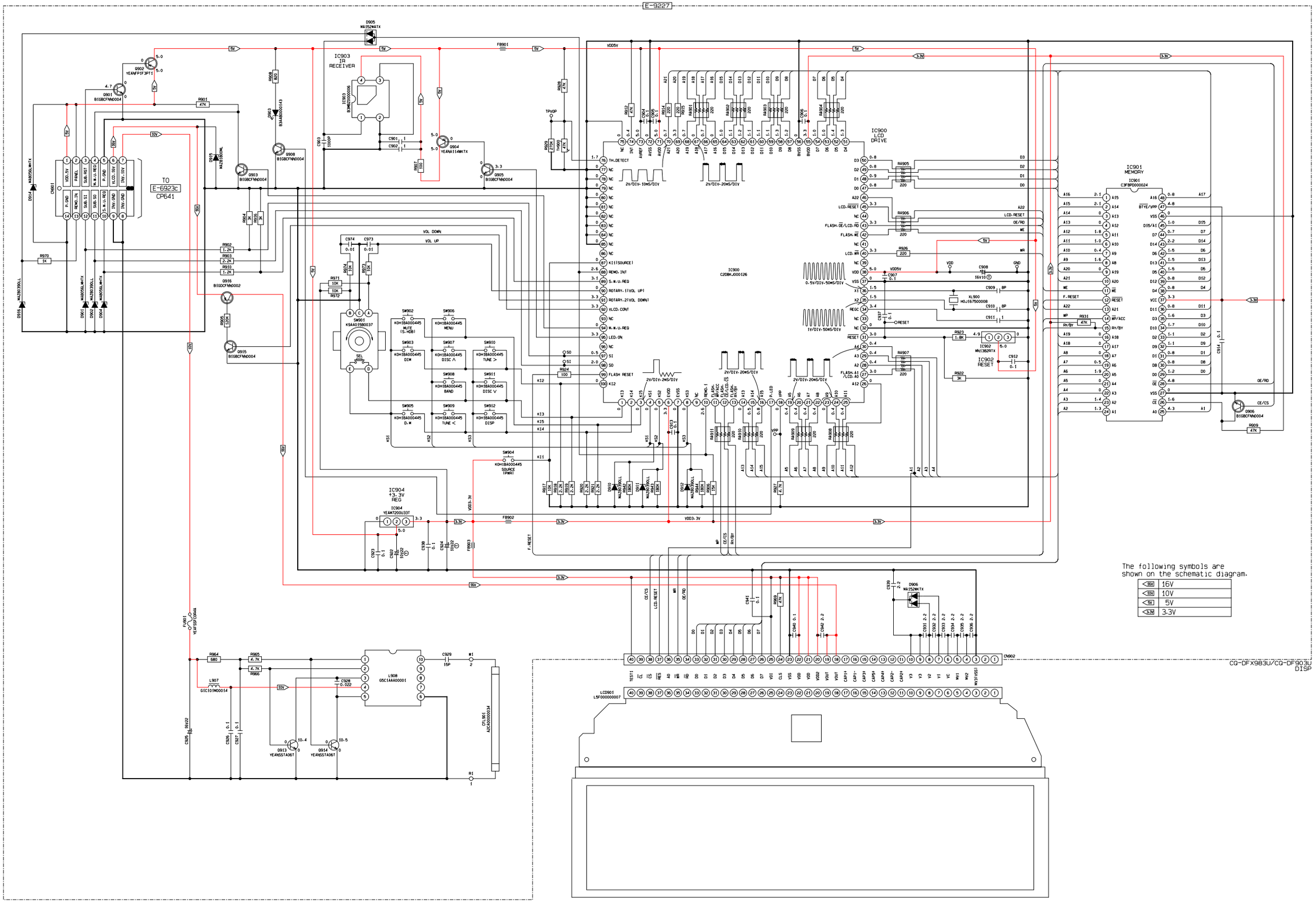

The following symbols are shown on the schematic diagram.

16V	16V
10V	10V
5V	5V
3.3V	3.3V

The following symbols are shown on the schematic diagram.

16V	16V
10V	10V
5V	5V

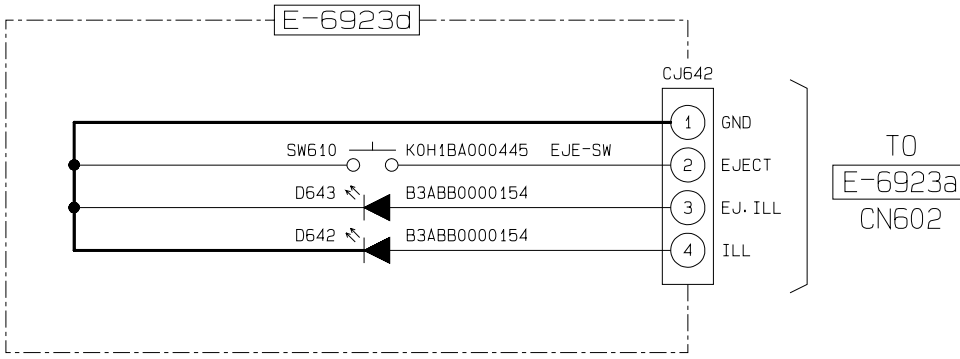

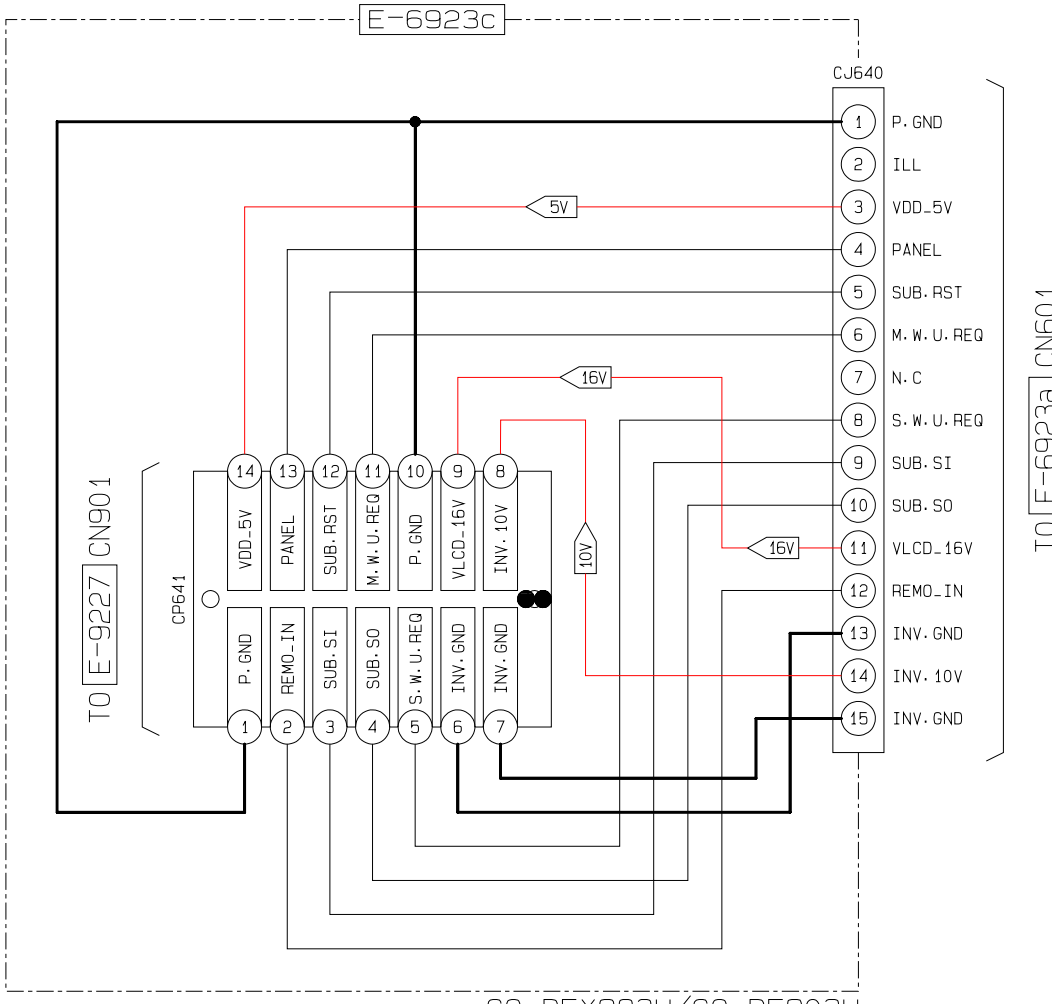

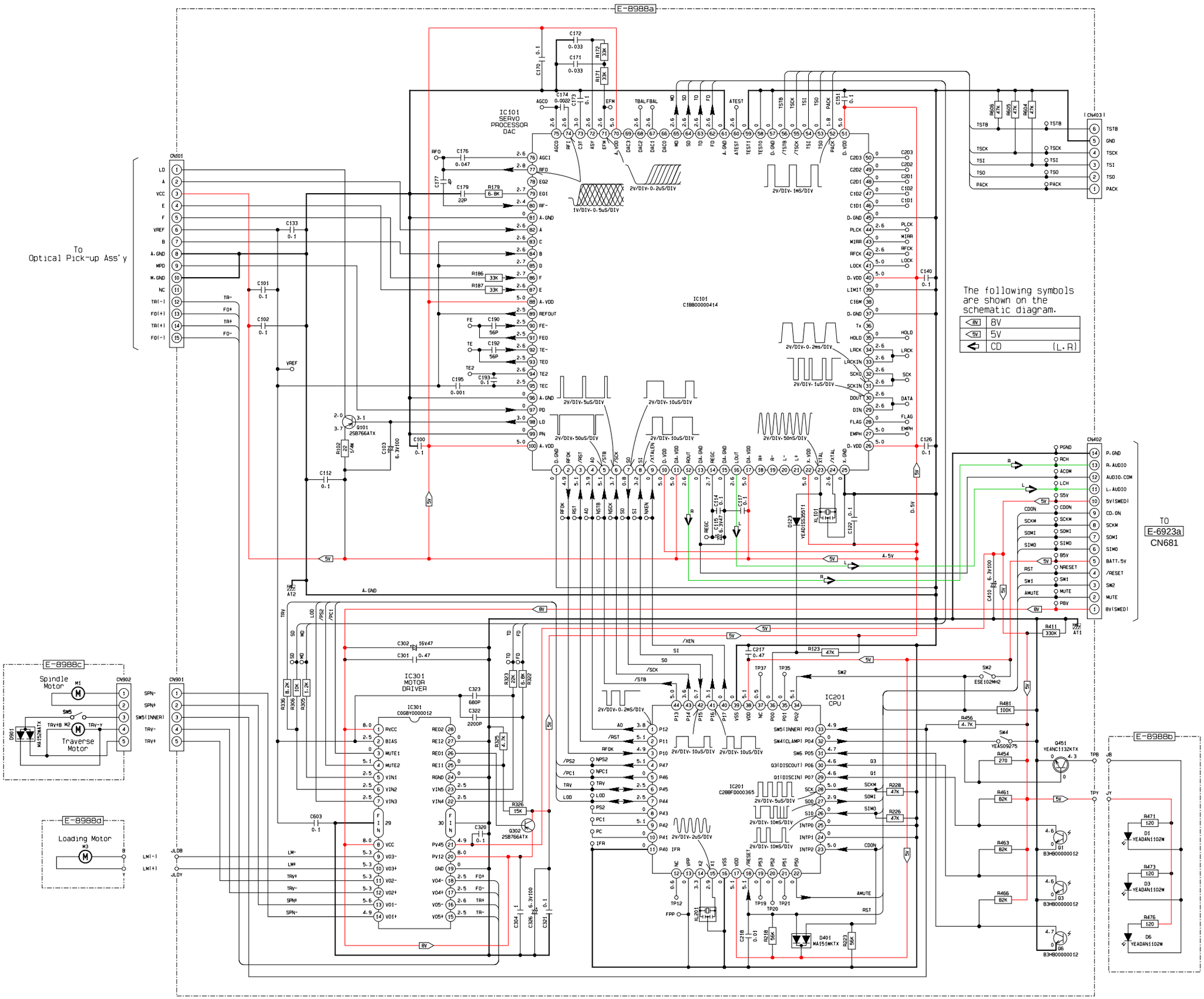
E-8988a
IC101
SERVO
PROCESSOR
DAC
IC101
C1BB00000414
To
Optical Pick-up Ass'y
CN101
The following symbols
are shown on the
schematic diagram.
8V
5V
CD (L.R)
(CN403)
TSTB
GND
TSCK
TSI
TSO
PACK
CN402
P.GND
R.AUDIO
AUDIO.COM
L.AUDIO
5V(SWED)
CD.ON
SCKM
SOMI
SIMO
BATT.5V
/RESET
SW2
MUTE
8V(SWED)
TO
E-6923a
CN681
E-8988c
Spindle
Motor
Traverse
Motor
CN902
CN901
IC301
MOTOR
DRIVER
IC301
C0GBY0000012
E-8988d
Loading Motor
IC201
CPU
IC201
C2BBF0000365
E-8988b
CQ-DF903U CD DECK (NCD8)

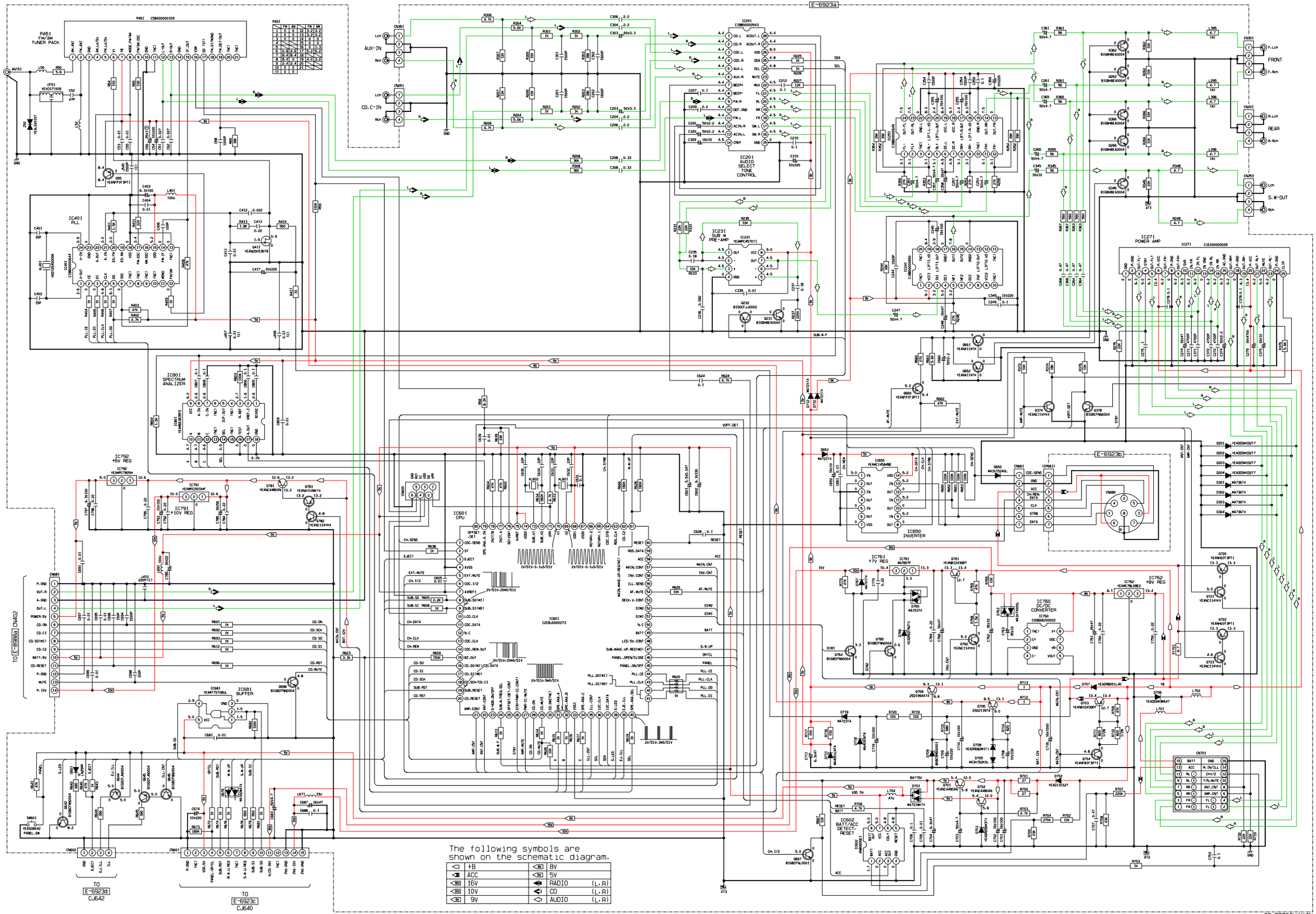
PA51 FM/AM TUNER PACK
IC401 PLL
IC801 SPECTRUM ANALIZER
IC792 +8V REG
IC791 +10V REG
IC601 CPU
IC681 BUFFER
IC201 AUDIO SELECT TONE CONTROL
IC231 SUB W PRE-AMP
IC271 POWER AMP
IC650 INVERTER
IC761 +7V REG
IC760 DC/DC CONVERTER
IC762 +8V REG
IC602 BATT/ACC DETECT+ RESET
AUX-IN
CD.C-IN
FRONT
REAR
S.W-OUT
TO E-6998a CN402
TO E-6923d CJ642
TO E-6923c CJ640
E-6923a
E-6923b
The following symbols are shown on the schematic diagram.
+B
ACC
16V
10V
9V
8V
5V
RADIO (L,R)
CD (L,R)
AUDIO (L,R)
CQ-DF903U MAIN

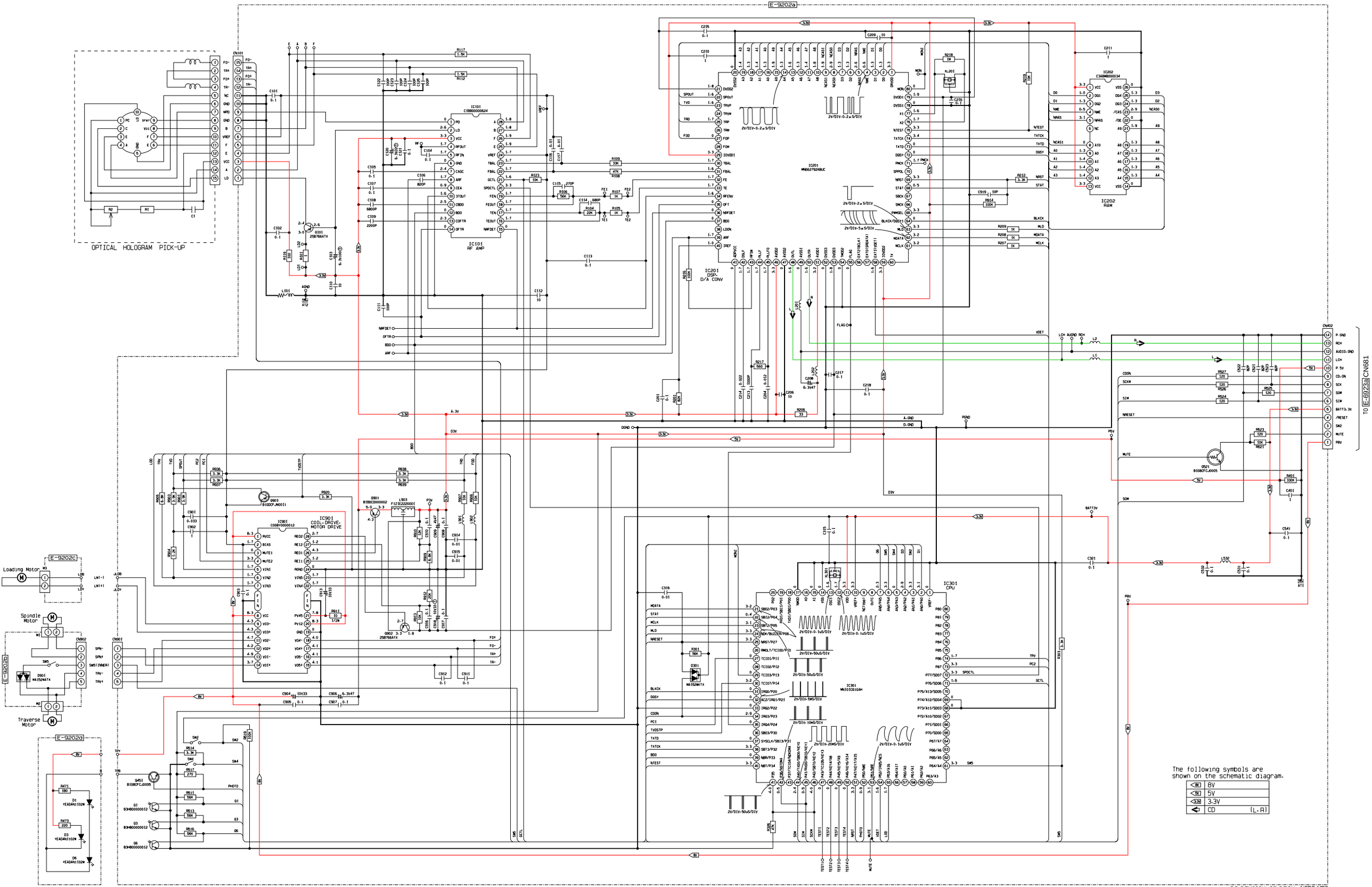
E-9202a
OPTICAL HOLOGRAM PICK-UP
IC101
RF AMP
IC201
DSP, D/A CONV
IC202
RAM
IC301
CPU
IC901
COIL-DRIVE-MOTOR DRIVE
Loading Motor
Spindle Motor
Traverse Motor
E-9202c
E-9202d
TO E-6923a CN081
The following symbols are shown on the schematic diagram.
8V
5V
3.3V
CD (L.R)

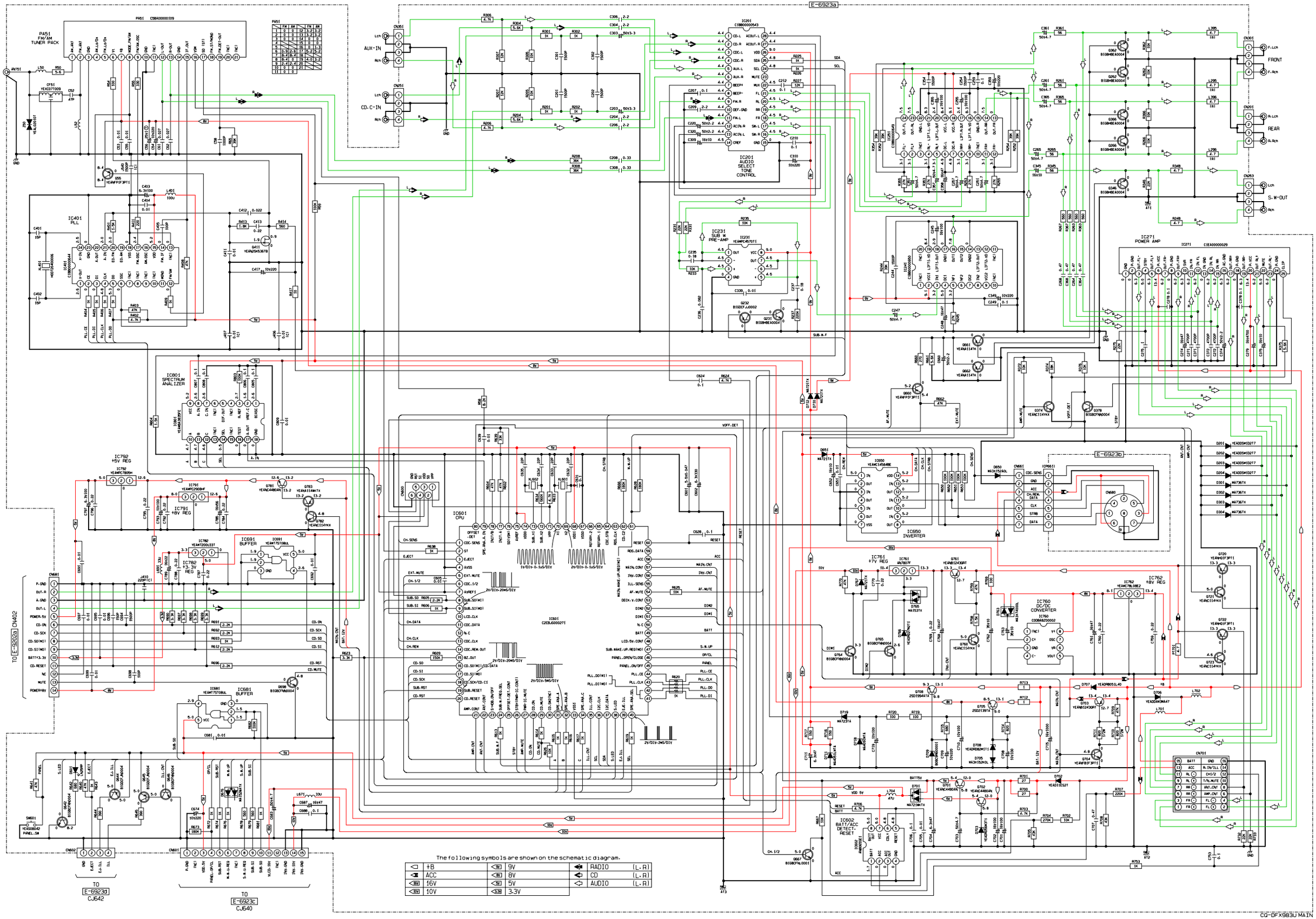
E-6923a
PA51
FM/AM TUNER PACK
AUX-IN
CD.C-IN
IC201
AUDIO SELECT TONE CONTROL
IC231
SUB W PRE-AMP
IC401
PLL
IC801
SPECTRUM ANALIZER
IC271
POWER AMP
FRONT
REAR
S.W-OUT
IC792
+5V REG
IC791
+8V REG
IC782
+3.3V REG
IC691
BUFFER
IC681
BUFFER
IC601
CPU
IC650
INVERTER
IC761
+7V REG
IC762
+8V REG
IC760
DC/DC CONVERTER
IC602
BATT/ACC DETECT-RESET
CN402
TO E-9203a
TO E-6923d CJ642
TO E-6923c CJ640
The following symbols are shown on the schematic diagram.
+B
ACC
16V
10V
9V
8V
5V
3.3V
RADIO (L.R)
CD (L.R)
AUDIO (L.R)
CO-DFX983U MAIN

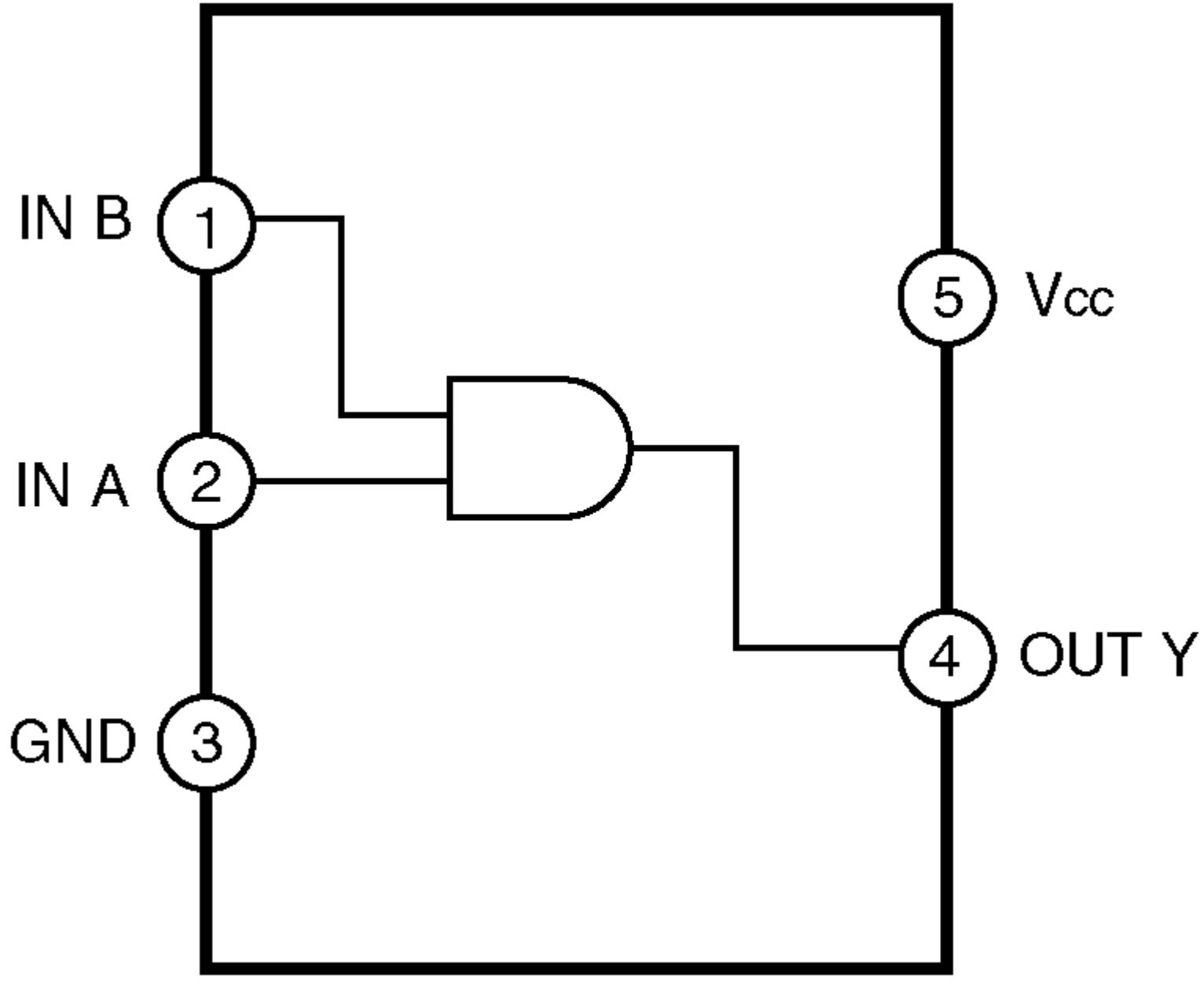
IN B
1
IN A
2
GND
3
5
Vcc
4
OUT Y

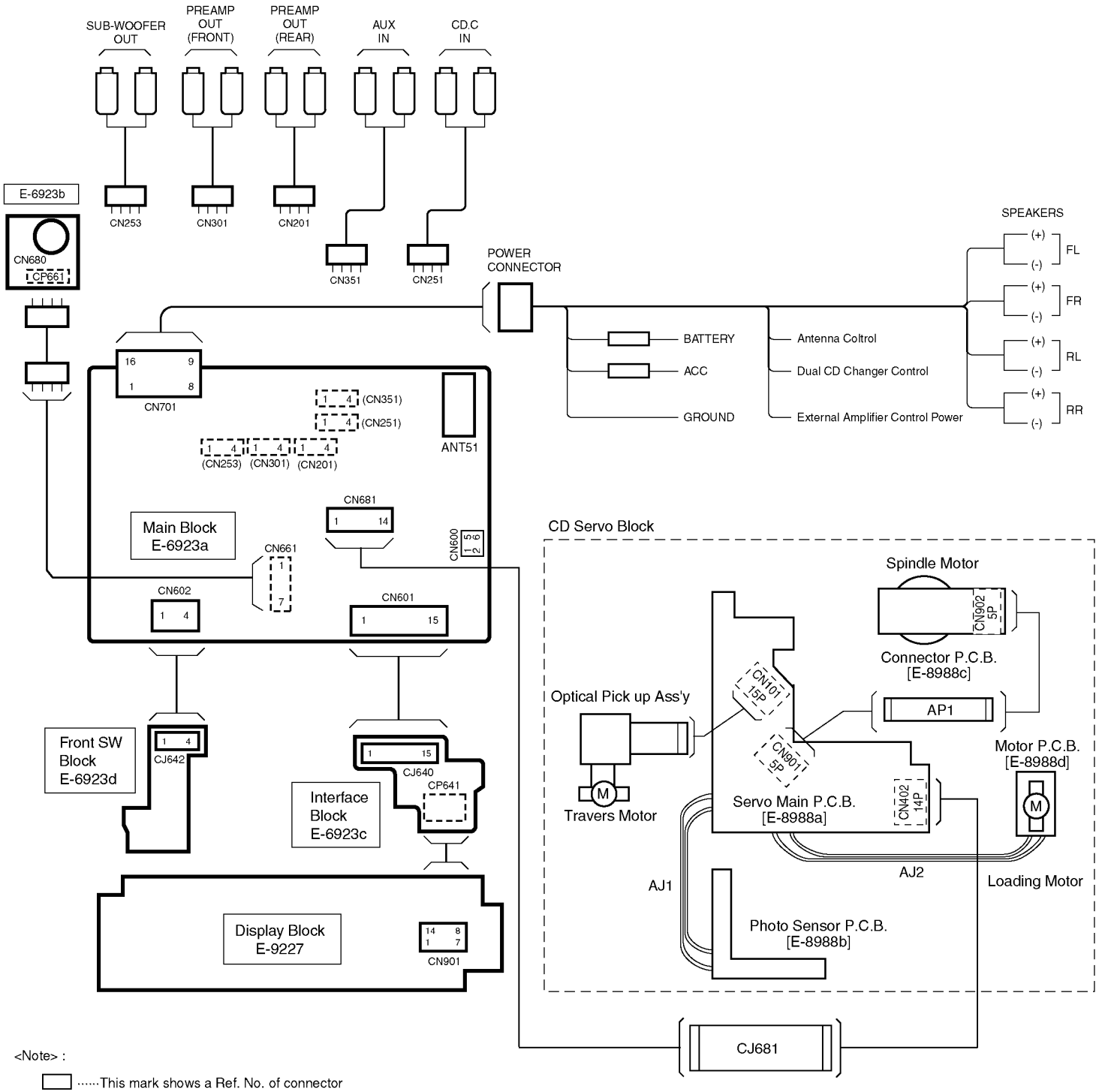

<Note> :

▭ ·····This mark shows a Ref. No. of connector

[ ] ·····This mark shows a mounting position of connector.

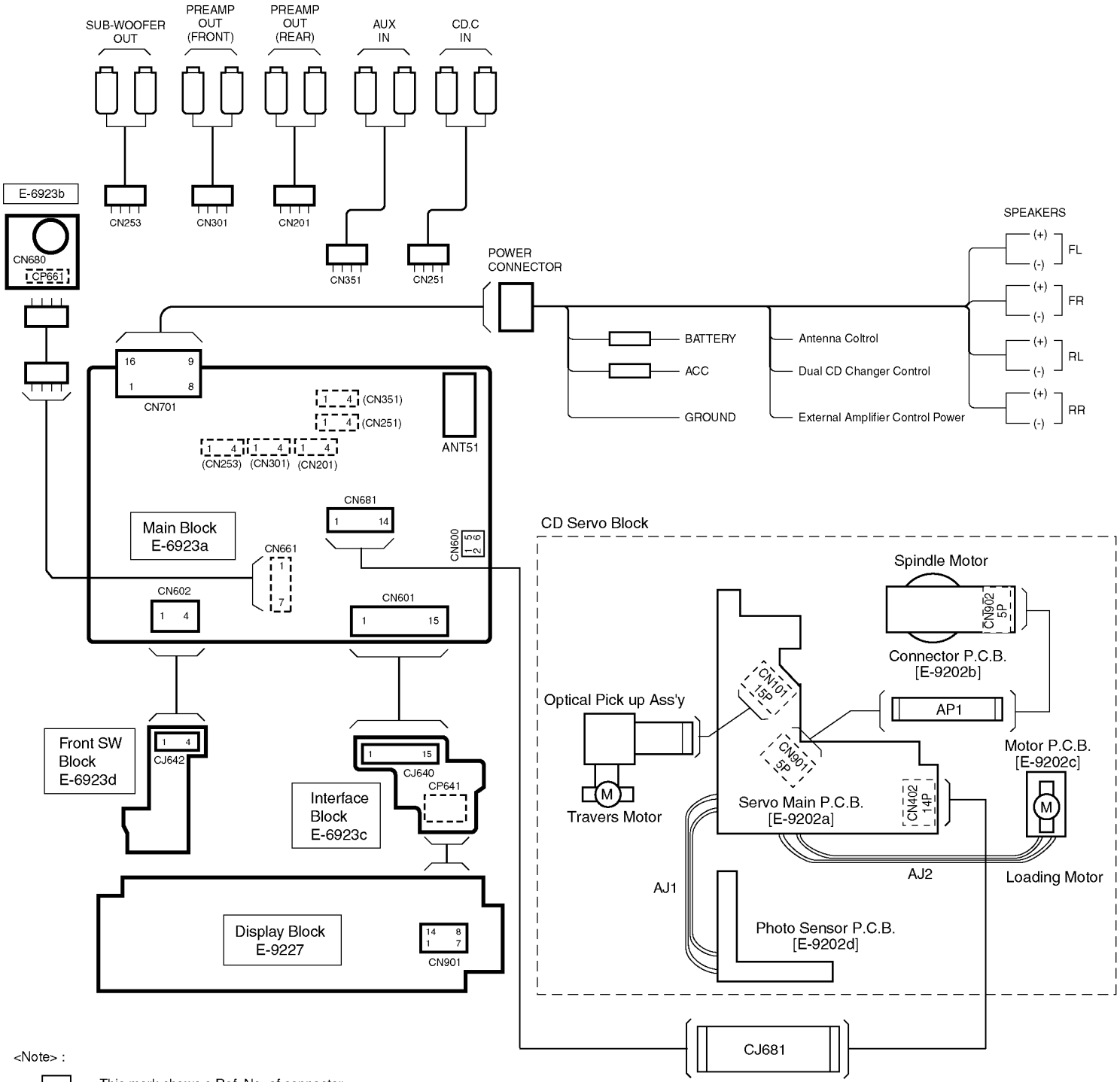

<Note> :

▭ ·····This mark shows a Ref. No. of connector

[ ] ·····This mark shows a mounting position of connector.

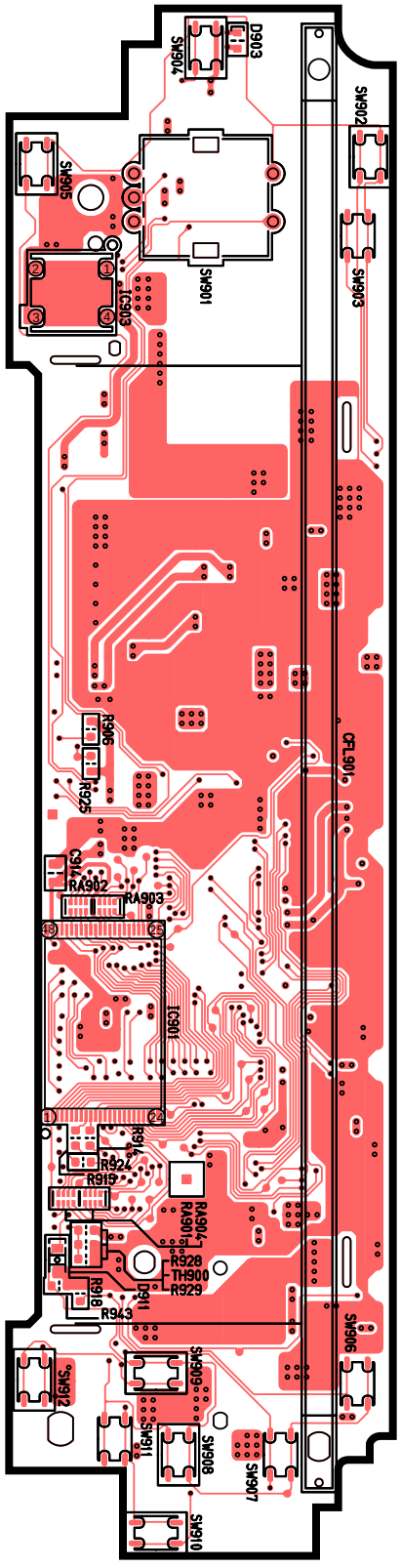

[E-9227] [Top View]

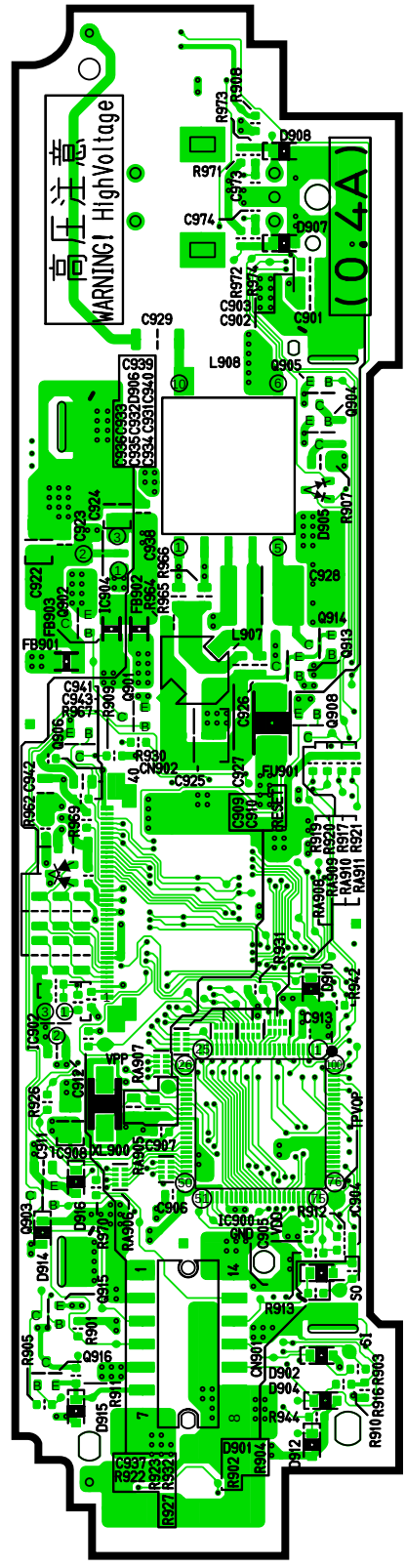

[E-9227] [Bottom View]

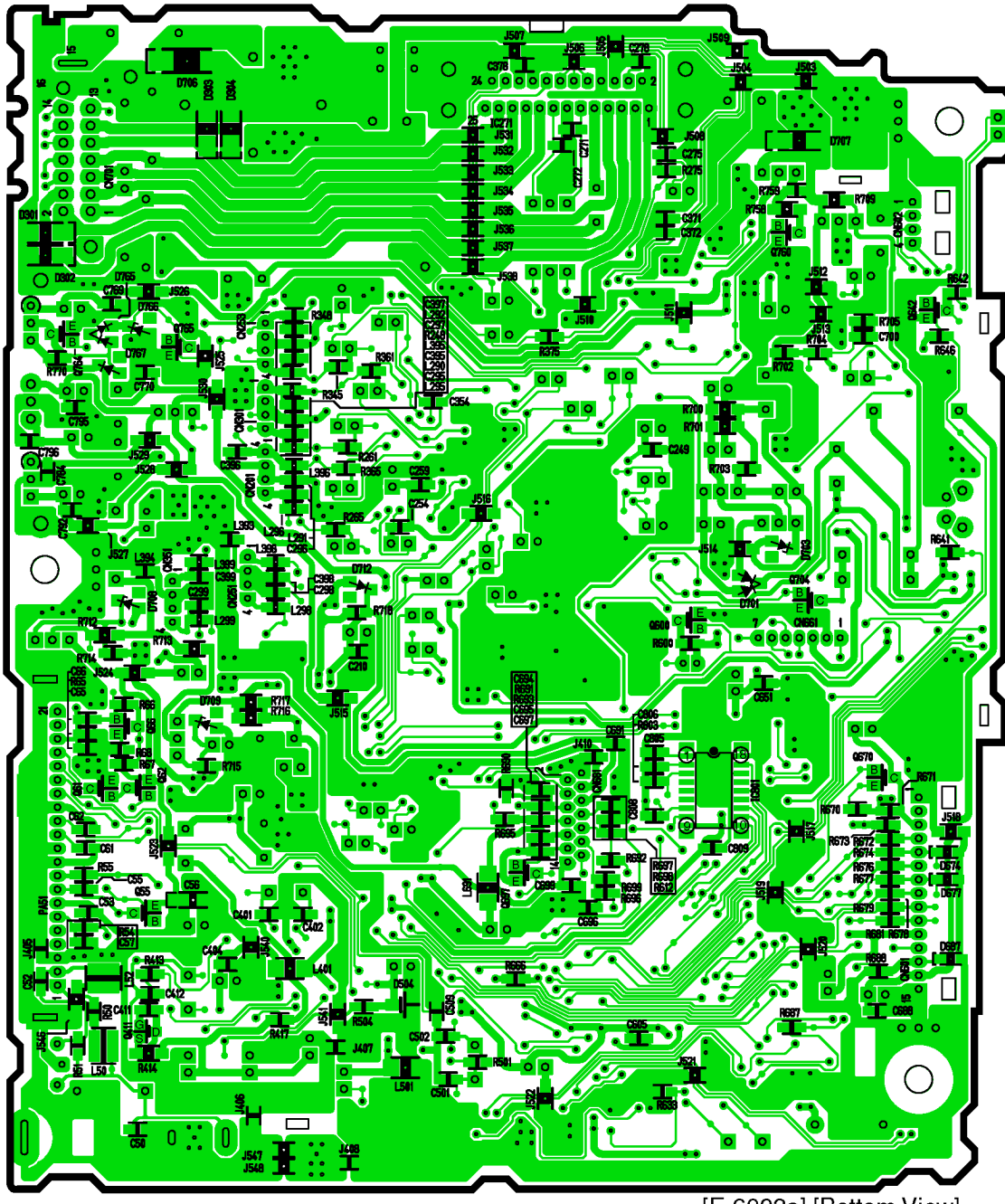

[E-6923a] [Bottom View]

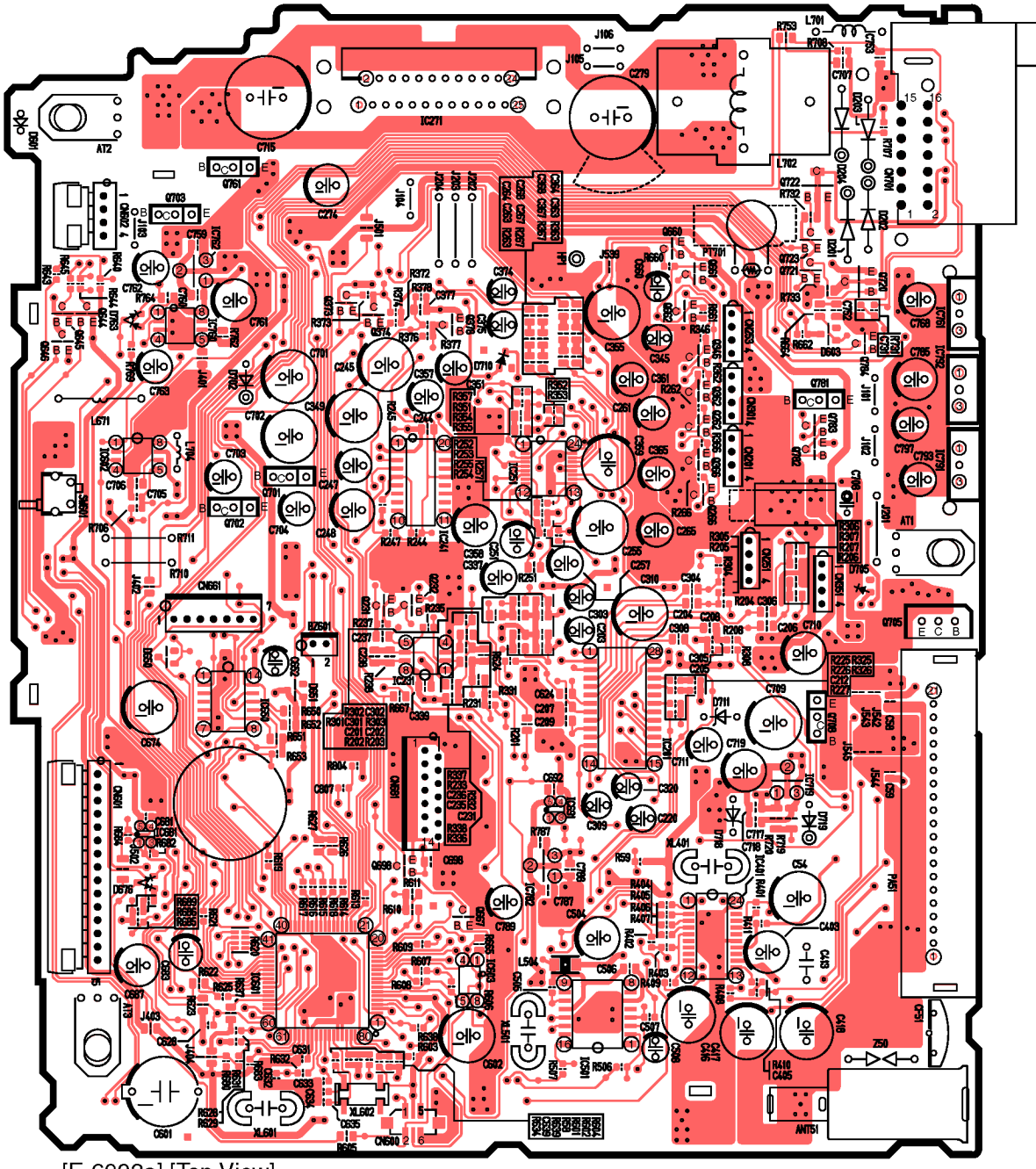

[E-6923a] [Top View]

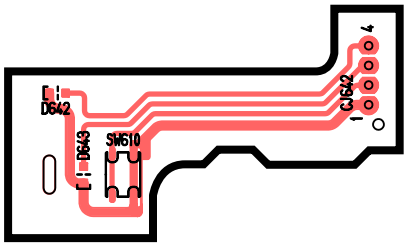

[E-6923d] [Top View]

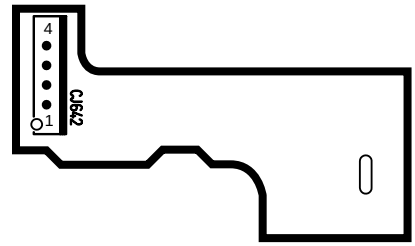

[E-6923d] [Bottom View]

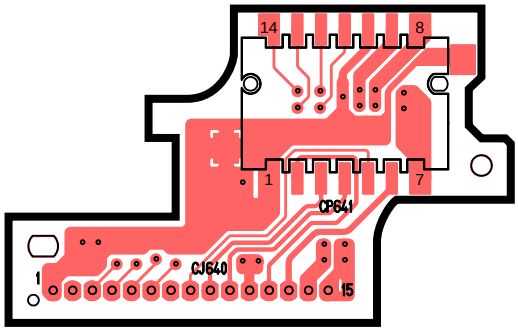

[E-6923c] [Top View]

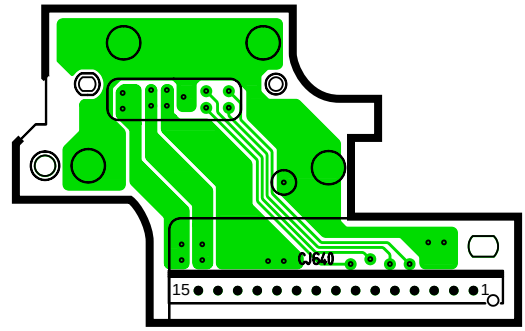

[E-6923c] [Bottom View]

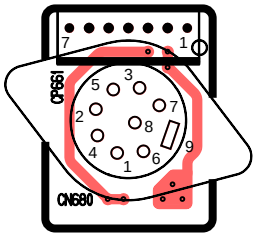

[E-6923b] [Top View]

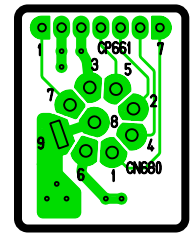

[E-6923b] [Bottom View]

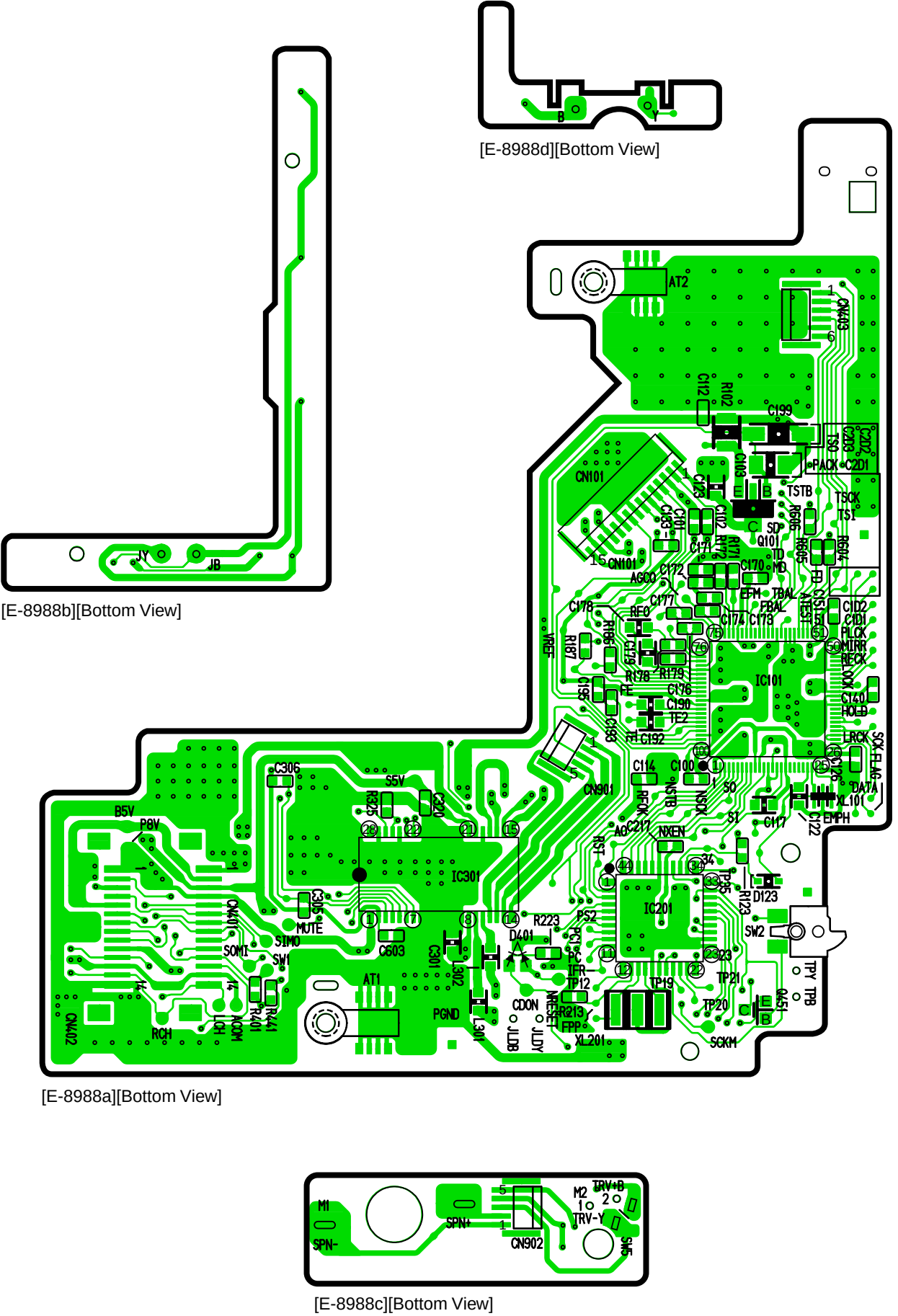

[E-8988d][Bottom View]

[E-8988b][Bottom View]

[E-8988a][Bottom View]

[E-8988c][Bottom View]

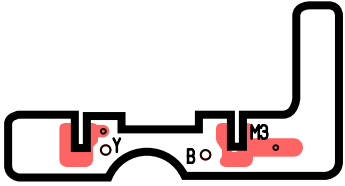

[E-8988d][Top View]

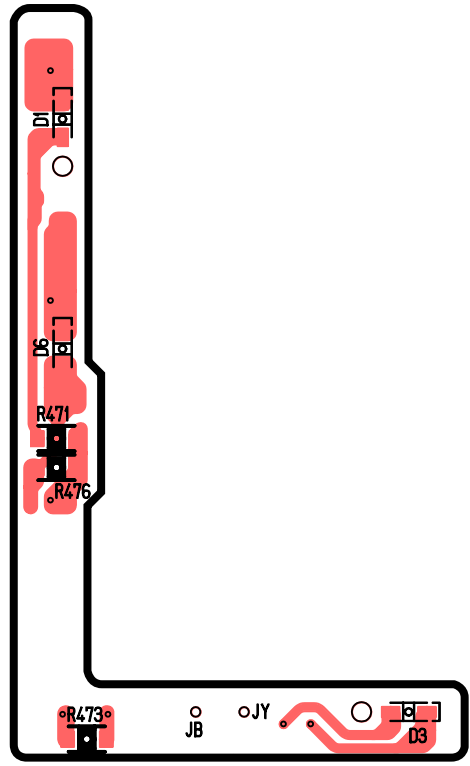

[E-8988b][Top View]

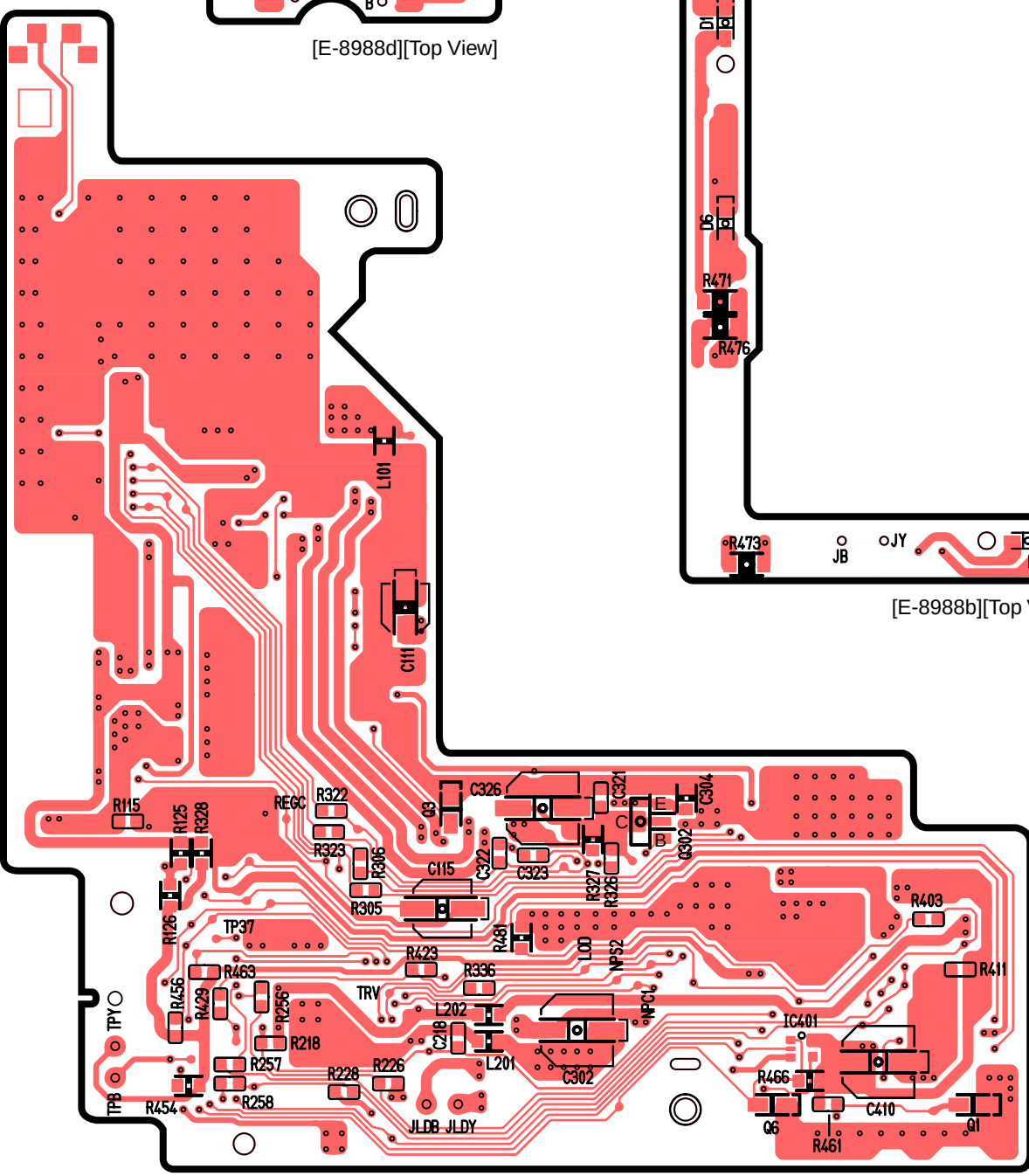

[E-8988a][Top View]

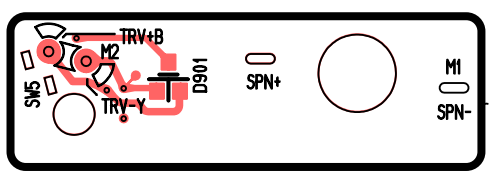

[E-8988c][Top View]

[E-9202d] [Bottom View]

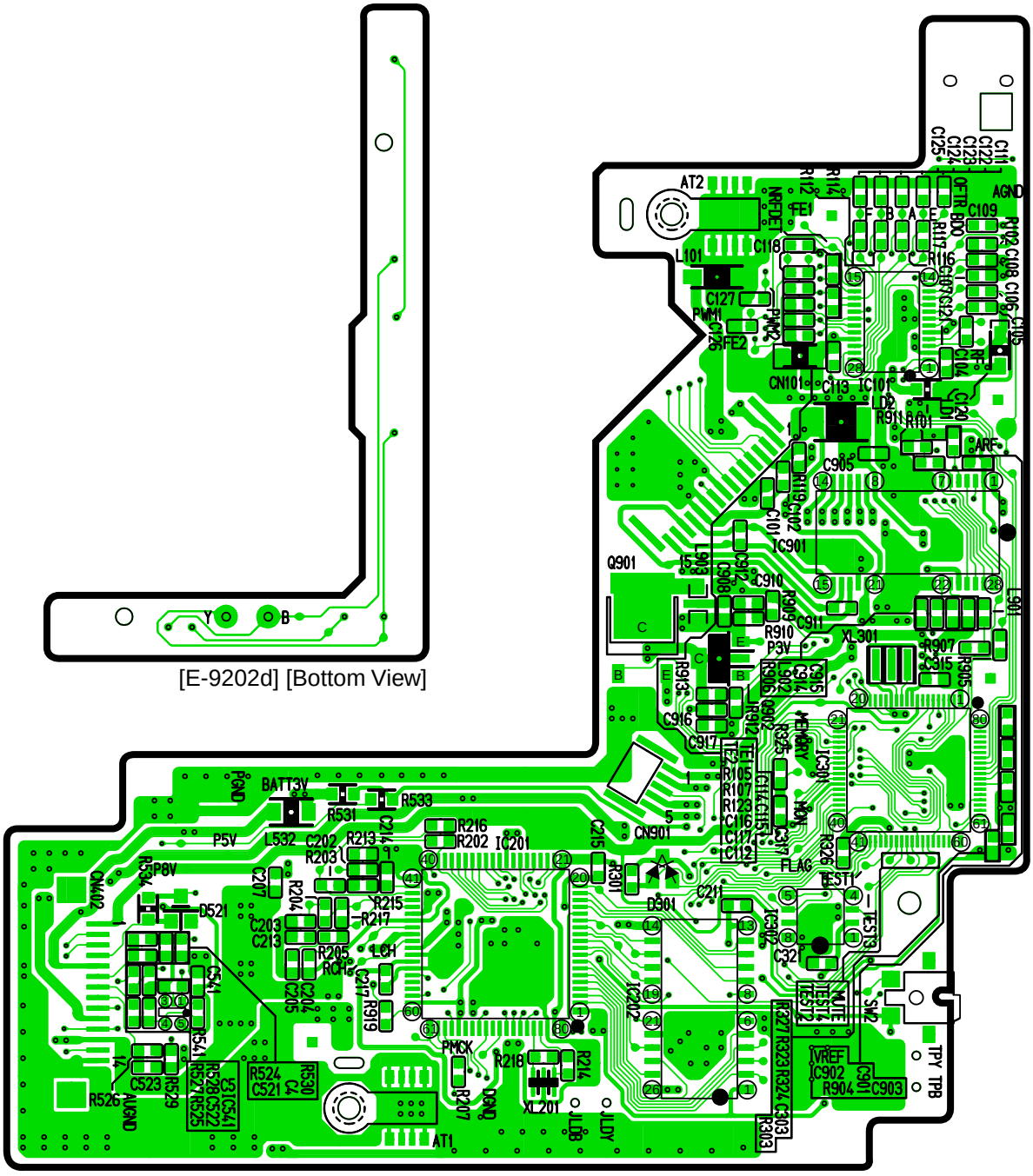

[E-9202a] [Bottom View]

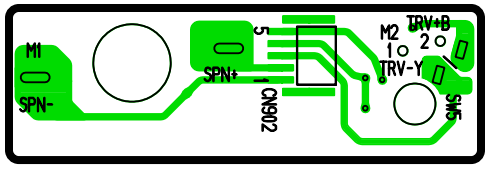

[E-9202b] [Bottom View]

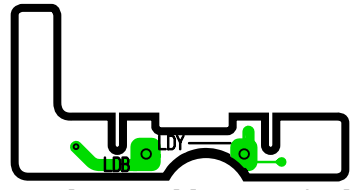

[E-9202c] [Bottom View]

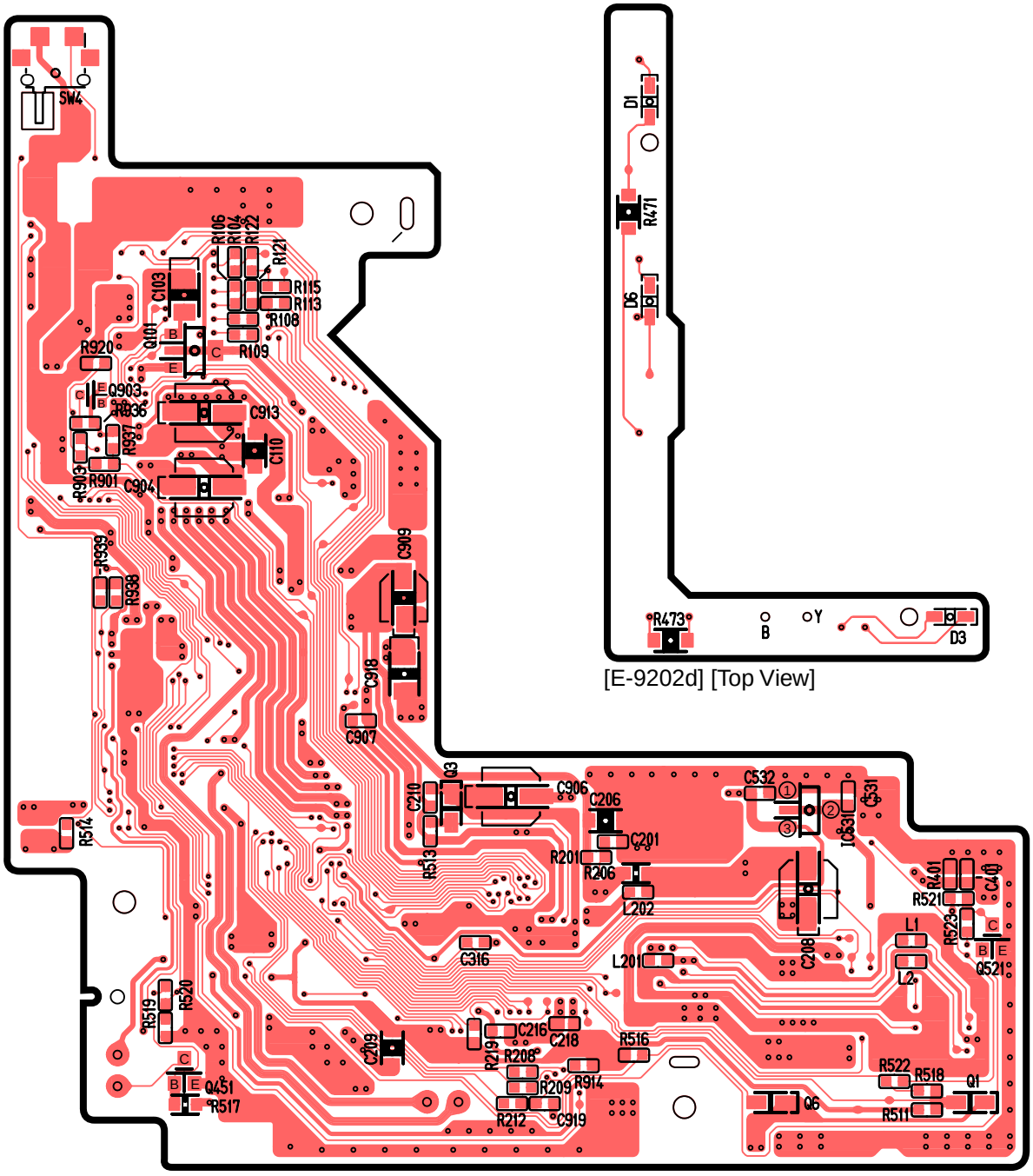

[E-9202d] [Top View]

[E-9202a] [Top View]

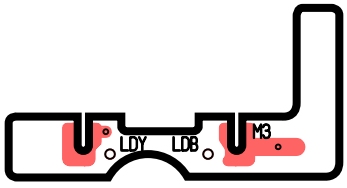

[E-9202c] [Top View]

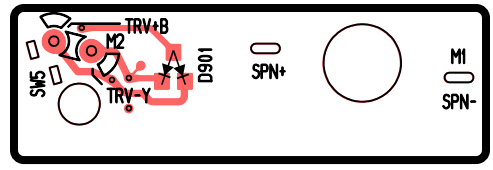

[E-9202b] [Top View]