SANYO

Solid State AM/FM Stereo Tuner Amp.

MODEL DC-66

SERVICE MANUAL

SANYO ELECTRIC CO., LTD.
INTERNATIONAL DIVISION: SANYO ELECTRIC TRADING CO., LTD.
OSAKA, JAPAN

SPECIFICATIONS

General

FET	2SK19	× 1			
Transistors	SE3001	× 2	2SC930	× 3	
	2SC772	× 1	2SC536	× 11	
	2SC929	× 1	2SC693	× 8	
	2N4248	× 2	2N3567	× 4	
	2N3641	× 2	MPSU06	× 2	
	MPSU56	× 2	2SD201	× 4	
Diodes	1S351	× 1	1S188	× 20	
	SZ-9	× 1	DS-410	× 3	
	DS-18	× 2	RD-5A	× 2	
	5B2	× 1	SA-22	× 2	

Power source .....AC 100,110,120,200,220,240V 50/60 Hz
Power consumption .....22W (at non-signal)
180W (at maximum output power)
AC outlets.....Switched 60W × 1
Unswitched 120W × 1
Dimensions .....18-1/2″ (W) × 16-1/8″ (D) × 6-1/4″ (H)
(470 × 410 × 160 mm)
Weight .....22.5 lbs. (10.3 kg.)

FM Tuner section

Tuning range .....88 - 108 MHz
Intermediate frequency .....10.7 MHz
Sensitivity .....3μV (IHF)
Antenna.....Input impedance 300 ohm, balanced
Capture ratio .....4 dB
Total harmonic distortion ...1%
AM suppression .....55 dB
Signal-to-noise ratio .....55 dB
Frequency response .....20 - 15,000 Hz ± 3 dB

FM MPX section

Channel separation .....32 dB at 1,000 Hz
Total harmonic distortion ...1.5%
Signal-to-noise ratio .....35 dB
Stereo frequency response ...20 - 15,000 Hz ± 3 dB

AM tuner section

Tuning range .....515 - 1,610 KHz
Intermediate frequency .....455 KHz
Sensitivity 320μV/m
Antenna.....Ferrite loop stick
Whistle modulation 5%
Harmonic distortion 3%

Audio amplifier section

Output power .....120W IHF total music power (0.8%)
40W IHF continuous power per channel (0.8%)
Frequency response .....15 - 50,000 Hz ± 3 dB
Power band width .....15 - 40,000 Hz ± 3 dB
Total harmonic distortion ...0.8% at rated power
0.2% at 1W per channel
Input sensitivity .....AUX 100 mV 60 Kohm
PHONO 1.2 2.5 mV 50 Kohm
Speaker impedance .....4 - 16 ohm (Recommended 8 ohm)
Phono equalization .....RIAA curve
Tone controls .....BASS ± 12 dB at 100 Hz
TREBLE ± 12 dB at 10K Hz
Loudness control .....50 Hz + 11 dB
10K Hz + 4 dB
High filter .....Over 6 KHz 6 dB/OCT cut
Low filter .....Below 150 Hz 6 dB/OCT cut
Residual noise .....2 mV/8 ohm (at minimum volume)

DIAL CORD STRINGING

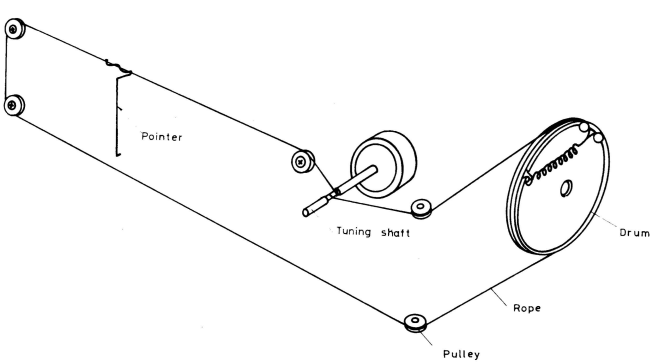

CIRCUIT DIAGRAM

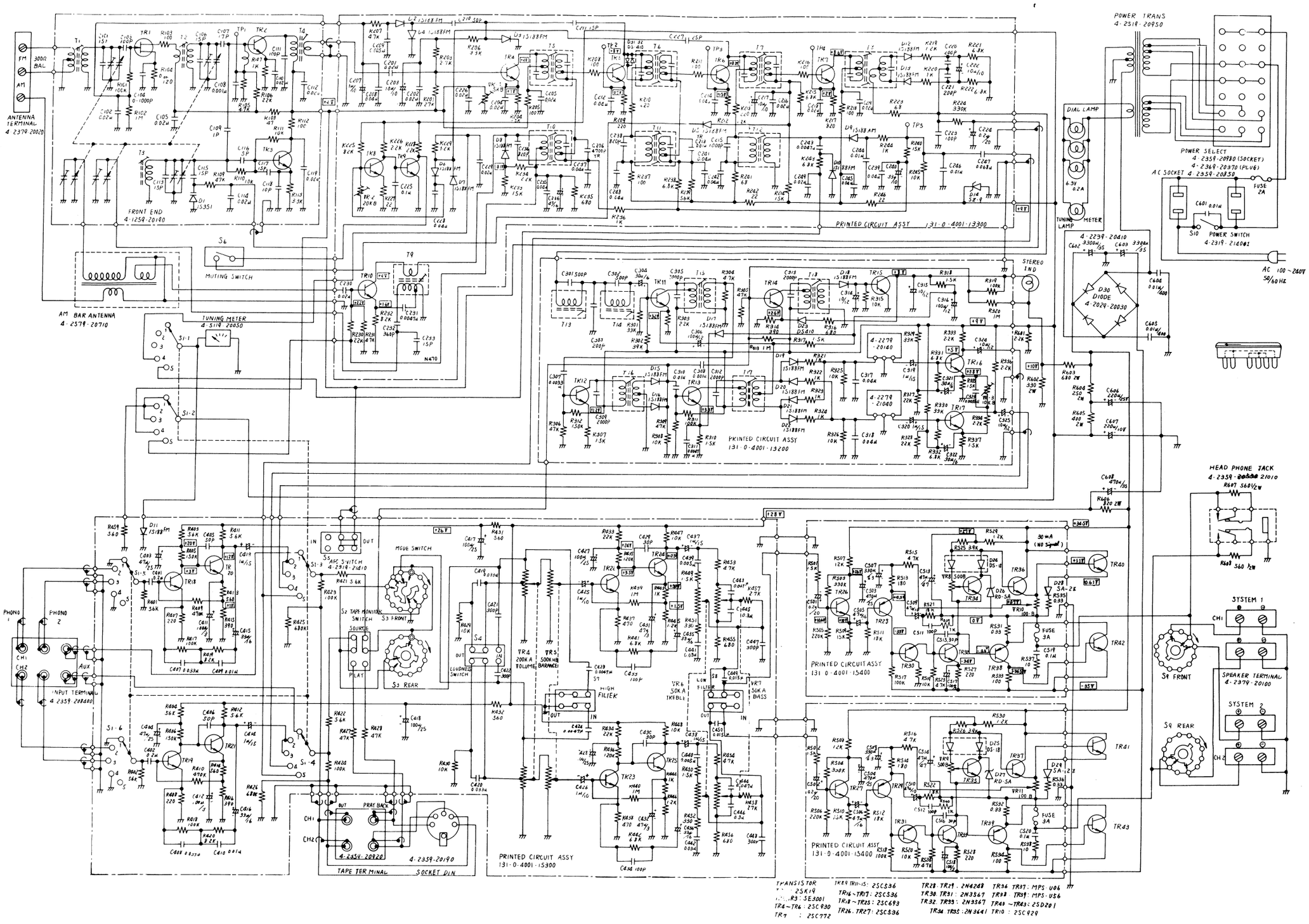

NOTES:

1. FUNCTION SWITCH(S1)
   AUX CONTINUE TO PHONO.1, PHONO.2, FM AUTO AND AM.
2. MODE SWITCH(S3)
   CH1 CONTINUE TO CH2, MONO, STEREO AND REVERSE.
3. SPEAKER SELECTOR SWITCH(S9)
   SYSTEM1+2 CONTINUE TO SYSTEM1, OFF, SYSTEM2 AND SYSTEM1+2.
4. UNLESS OTHERWISE SPECIFIED ALL CAPACITOR VALUES IN MICROFARADS.
5. EVERY RESISTOR VALUES IN OHM.
6. ALL RESISTOR ARE ¼ WATT, 10% EXCEPT.
7. VOLTAGE MEASURED WITH V.T.V.M WITH RESPECT TO CHASSIS GROUND. NO SIGNAL, 100V AC LINE, VOLTAGE MAY VARY BY 10%.
8. THIS IS A FUNDAMENTAL CIRCUIT DIAGRAM. SOME PRODUCTION CHANGES MAY BE MADE WITHOUT REVISION OF THE DIAGRAM.

PARTS LIST

Ref. No.	Description	Q'ty
R455,R456	Carbon R 680 ohm ±10% 1/4W	2
R443,R444	Carbon R 1 Kohm ±10% 1/4W	2
R445,R446	Carbon R 1.2 Kohm ±10% 1/4W	2
R449,R450	Carbon R 1.5 Kohm ±10% 1/4W	2
R457,R458	Carbon R 2.7 Kohm ±10% 1/4W	2
R453,R454	Carbon R 4.7 Kohm ±10% 1/4W	2
R411,R412,R421, R422	Carbon R 5.6 Kohm ±10% 1/4W	4
R441,R442	Carbon R 6.8 Kohm ±10% 1/4W	2
R429,R430,R447, R448	Carbon R 10 Kohm ±10% 1/4W	4
R433,R434	Carbon R 22 Kohm ±10% 1/4W	2
R427,R428	Carbon R 47 Kohm ±10% 1/4W	2
R401,R402,R403, R404	Carbon R 56 Kohm ±10% 1/4W	4
R417,R418,R423, R424	Carbon R 100 Kohm ±10% 1/4W	4
R435,R436	Carbon R 120 Kohm ±10% 1/4W	2
R405,R406	Carbon R 150 Kohm ±10% 1/4W	2
R409,R410	Carbon R 470 Kohm ±10% 1/4W	2
R425,R426	Carbon R 680 Kohm ±10% 1/4W	2
R439,R440	Carbon R 1000 Kohm ±10% 1/4W	2
R419,R420	Carbon R 8.2 Kohm ±10% 1/4W	2
	Capacitor-	
C439,C440	Mylar, 0.005 μF ±20% 50WV	2
C409,C410	Mylar, 0.01 μF ±20% 50WV	2
C441,C442	Mylar, 0.03 μF ±20% 50WV	2
C407,C408,C419, C420	Mylar, 0.033 μF ±20% 50WV	4
C443,C444	Mylar, 0.047 μF ±20% 50WV	2
C401,C402	Mylar, 0.2 μF ±20% 50WV	2
C445,C446	Mylar, 0.3 μF ±20% 50WV	2
C429,C430	Ceramic SL, 30 μμF ±20% 50WV	2
C405,C406	Ceramic SL, 50 μμF ±20% 50WV	2
C433,C434	Ceramic SL, 100 μμF ±20% 50WV	2
C421,C422,C447, C448	Ceramic SL, 300 μμF ±20% 50WV	4
C425,C426	Aluminum Solid, 1 μF −20% −+40% 10WV	2
C437,C438,C413, C414	Aluminum Solid, 1 μF −20% −+40% 15WV	4
C415,C416,C435, C436	Electrolytic, 33 μF −10% −+100% 16WV	4
C431,C432	Electrolytic, 47 μF −10% −+100% 3WV	2
C403,C404	Electrolytic, 47 μF −10% −+100% 25WV	2
C411,C412	Electrolytic, 100 μF −10% −+100% 3WV	2
C417,C418,C427, C428	Electrolytic, 100 μF −10% −+100% 25WV	4
C423,C424	Mylar, 0.0047 μF ±20% 50WV	2
C449,C450	Mylar, 0.015 μF ±20% 50WV	2
C451,C452	Ceramic SL, 200 μμF ±20% 25WV	2

Ref. No.	Parts No.	Description	Q'ty
Electrical Parts (*4- -POWER Circuit)			
*4	1310-4001-15400	Printed Circuit Assy-POWER Circuit	2
	4-2269-21080	Printed Circuit Board	2
VR8,VR9	4-2229-21640	Variable Resistor-100 ohm, B-Type	2
VR10,VR11	4-2229-21650	Variable Resistor-500 ohm, B-Type	2
	4-2359-20930	Fuse Holder	4
	4-2349-20020	Fuse-3A	2
	4-2379-20630	Tab	12

Ref. No.	Description	Q'ty
TR26,TR27	Transistor-2SC536	2
TR28,TR29	Transistor-2N4248	2
TR30,TR31	Transistor-2N3567	2
TR32,TR33	Transistor-2N3567	2
TR34,TR35	Transistor-2N3641	2
TR36,TR37	Transistor-MPS-U06	2
TR38,TR39	Transistor-MPS-U56	2
D24,D25	Diode-DS-18	2
D26,D27	Diode-RD-5A	2
D28,D29	Diode-SA-2Z	2
	Resistor-	
R531,R532, R535,R536	Wire Wound, 0.33 ohm ±10% 3W	4
R537,R538	Oxide Metal Film, 10 ohm ±10% 2W	2
R533,R534	Oxide Metal Film, 100 ohm ±10% 2W	2
R513,R514	Carbon R, 180 ohm ±10% 1/4W	2
R527,R528	Carbon R, 220 ohm ±10% 1/4W	2
R501,R502	Carbon R, 1.5 Kohm ±10% 1/4W	2
R529,R530	Carbon R, 1.2 Kohm ±10% 1/4W	2
R525,R526	Carbon R, 3.9 Kohm ±10% 1/4W	2
R515,R516, R523,R524	Carbon R, 4.7 Kohm ±10% 1/4W	4
R519,R520	Carbon R, 10 Kohm ±10% 1/4W	2
R507,R508	Carbon R, 12 Kohm ±10% 1/4W	2
R509,R510	Carbon R, 15 Kohm ±10% 1/4W	2
R511,R512, R521,R522	Carbon R, 18 Kohm ±10% 1/4W	4
R505,R506	Carbon R, 220 Kohm ±10% 1/4W	2
R503,R504	Carbon R, 330 Kohm ±10% 1/4W	2
R517,R518	Carbon R, 100 Kohm ±10% 1/4W	2
R539,R540	Carbon R, 1 Kohm ±10% 1/4W	2
	Capacitor-	
C519,C520	Mylar, 0.1 μF ±20% 50WV	2
C515,C516	Ceramic, 30 μμF ±20% 50WV	2
C511,C512	Ceramic, 100 μμF ±20% 50WV	2
C501,C502	Mylar, 0.2 μF ±20% 20WV	2
C505,C506	Electrolytic, 4.7 μF −10% −+150% 16WV	2
C513,C514	Electrolytic, 47 μF −10% −+100% 47WV	2
C507,C508	Electrolytic, 330 μF −10% −+100% 6.3WV	2
C503,C504	Electrolytic, 330 μF −10% −+100% 35WV	2
C509,C510	Electrolytic, 4.7 μF −10% −+150% 10WV	2
C517,C518	Electrolytic, 100 μF −10% −+100% 3 WV	2

POWER P.C.B.

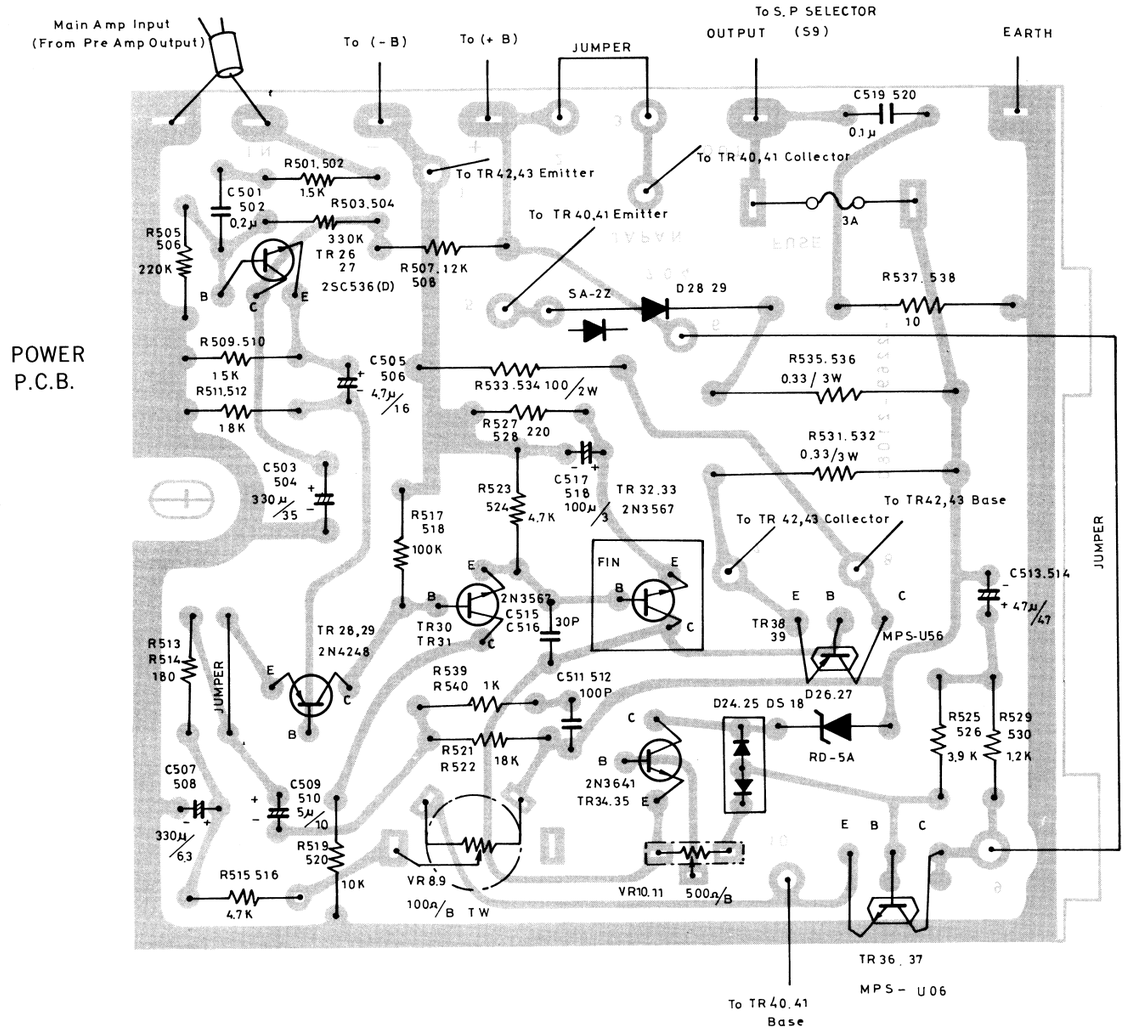

PRE AMP P.C.B.

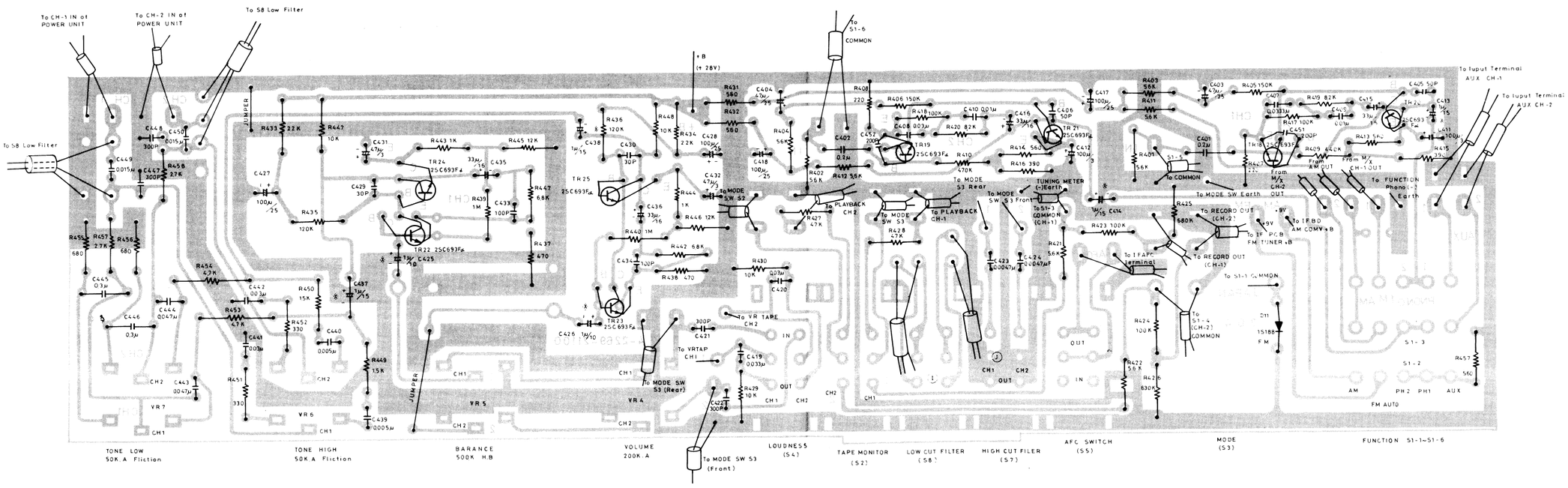

PARTS LIST

Ref. No	Parts No	Description	Q'ty
Electrical Parts(*2- -MPX Circuit)			
*2	1310-4001-13200	PCB-MPX Circuit	1
T13,T14	4-2659-20140	Multiplex Coil SCA	2
T15,T18	4-2659-20150	Multiplex Coil 19 KHz	2
T16	4-2659-20160	Multiplex Coil 19 KHz	1
T17	4-2659-20170	Multiplex Coil 38 KHz	1
	4-2269-21320	Printed Circuit Board	1
	4-2279-20140	Rescap	2
VR3	4-2229-21420	VR-10 Kohm B Type	1
	4-2379-20630	Tab	8

Ref. No.	Description	Q'ty
TR11,TR12,TR13, TR14,TR15	Transistor-2SC536	5
TR16,TR17	Transistor-2SC536	2
D15,D16,D17,D18, D19,D20,D21,D22	Diode-1S188	8
D23	Diode-DS410	1
	Resistor	
R314	Carbon R, 390 ohm, ±10%,1/4W	1
R316	Carbon R, 680 ohm, ±10%, 1/4W	1
R321,R322,R323, R324	Carbon R, 1 Kohm, ±10%, 1/4W	4
R307,R310,R317, R318,R335,R337	Carbon R 1.5 Kohm, ±10%, 1/4W	6
R303,R333,R336	Carbon R, 2.2 Kohm, ±10%, 1/4W	3
R334	Carbon ELR, 2.2 Kohm, ±10%, 1/4W	1
R304	Carbon R, 4.7 Kohm, ±10%, 1/4W	1
R331,R332	Carbon R, 6.8 Kohm, ±10%, 1/4W	2
R308,R325,R326	Carbon R, 10 Kohm, ±10%, 1/4W	3
R315	Carbon ELR, 10 Kohm, ±10%, 1/4W	1
R327,R328	Carbon R, 22 Kohm, ±10%, 1/4W	2
R301,R329,R330	Carbon R, 33 Kohm, ±10%, 1/4W	3
R302	Carbon R, 39 Kohm, ±10%, 1/4W	1
R305.R306,R309	Carbon R, 47 Kohm, ±10%, 1/4W	3
R311,R319	Carbon R, 100 Kohm, ±10%, 1/4W	2
R312	Carbon R, 150 Kohm, ±10%, 1/4W	1
R313,R320	Carbon R, 1 Megohm, ±10%, 1/4W	2
	Capacitor-	
C319,C320	Electrolytic, 1 μF, −10% −+150%, 15WV	2
C314,C315,C324, C325	Electrolytic, 10 μF, −10% −+150%, 12WV	4

Ref. No.	Description	Q'ty
C304,C321,C322	Electrolytic, 30 μF, 10% +150%, 6WV	3
C306,C316	Electrolytic, 100 μF, 10% +150%, 12WV	2
C308	Mylar, 0.001 μF, ±20%, 50WV	1
C307,C323	Mylar, 0.0033 μF, ±20%, 50WV	2
C311	Mylar, 0.0047 μF, ±20%, 50WV	1
C310	Mylar, 0.01 μF, ±20%, 50WV	1
C317,C318	Mylar, 0.04 μF, ±20%, 50WV	2
C303	Plastic Film, 200 μμF, ±10%, 25WV	1
C301,C302	Plastic Film, 500 μμF, ±10%, 25WV	2
C305,C309,C312, C313	Plastic Film, 2,000 μμF, ±10%, 25WV	4

Ref. No.	Parts No.	Description	Q'ty
Electrical Parts (*3- -PRE AMP Circuit)			
*3	1310-4001-15300	Printed Circuit Assy-PRE AMP Circuit	1
	4-2269-21100	Printed Circuit Board	1
VR4	4-2229-21381	Variable Resistor-VOLUME A-200 Kohm × 2	1
VR5	4-2229-21371	Variable Resistor-BALANCE HB-500 Kohm	1
VR6, VR7	4-2229-21630	Variable Resistor-TREBLE, BASS A-50 Kohm × 2	2
S1	4-2319-21611	Switch Rotary-SELECTOR	1
S2,S4,S5, S7,S8,	4-2319-21700	Switch Lever-LOUDNESS,TAPE MON, LOW FILTER, HIGH FILTER, FM AFC	5
	4-2379-20630	Tab	37

Ref. No.	Description	Q'ty
TR18,TR19,TR20, TR21,TR22,TR23, TR24,TR25	Transistor-2SC693	8
D11	Diode-1S188	1
	Resistor-	
R407,R408	Carbon R 220 ohm ±10% 1/4W	2
R451,R452	Carbon R 330 ohm ±10% 1/4W	2
R415,R416	Carbon R 390 ohm ±10% 1/4W	2
R437,R438	Carbon R 470 ohm ±10% 1/4W	2
R413,R414 R431, R432,R459	Carbon R 560 ohm ±10% 1/4W	5

MPX P.C.B.

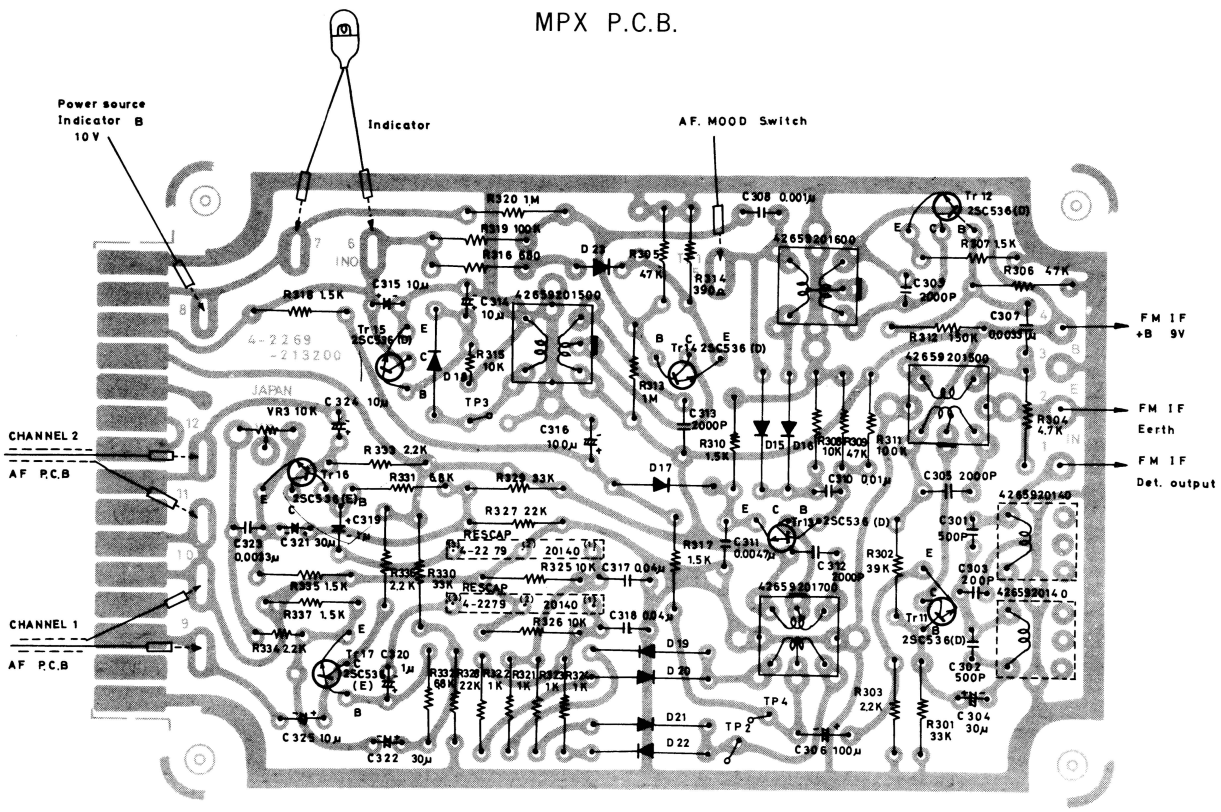

PARTS LIST

Ref. No.	Parts No.	Description	Q'ty
Electrical Parts (Chassis Section)			
	4-1259-20190	Front End	1
	4-2519-20950	Power Trans	1
	4-2239-20410	Electrolytic Capacitor-3300μF/35WV	2
	4-2359-21010	Jack Headphone	1
	4-2359-20190	Socket DIN	1
	4-2359-20920	Socket Phono 4P-RECORDER OUT, PLAYBACK	1
	4-2359-20840	Socket Phono 6P-PHONO,AUX	1
	4-2359-20850	Socket AC-AC OUTLET	2
	4-2379-20020	Terminal Antenna-3P Terminal	1
	4-2379-20100	Terminal Speaker-2p	4
	4-2359-20200	Fuse Holder	1
	4-2349-20030	Fuse-2A	1
	4-2439-20080	Power Cord	1
	4-2319-21401	Switch-POWER	1
	4-2319-21411	Switch Auto-MUTING	1
	4-2579-20710	Antenna Coil-Bar Antenna	1
	4-5119-20050	Meter Tuning	1
	4-6129-20141	Pilot Lamp-STEREO INDICATOR	1
	4-2319-21591	Switch Rotary-MODE	1
	4-2319-21601	Switch Rotary-Speaker Selector	1
	4-2359-20970	Holder Pilot Lamp Assy-TUNING METER	1
	1310-4002-11200	Holder Pilot Lamp Assy-Dial	1

Ref. No.	Parts No.	Description	Q'ty
	4-6129-20010	Pilot Lamp-6.3V, 0.2A	4
	4-2359-20980	Socket Power Select	1
	4-2369-20370	Plug Power Select	1
	4-2379-20520	Terminal Lug 1-6PL	2
	4-2369-20090	Receptacle	55

Ref. No.	Description	Q'ty
TR40,TR41, TR42,TR43	Transistor-2SD201	4
D30	Diode-5B2	1
	Resistor-	
R604	Carbon R, 250 ohm ±10% 2W	1
R602	Carbon R, 330 ohm ±10% 2W	1
R605	Carbon R, 400 ohm ±10% 2W	1
R607,R608	Carbon R, 560 ohm ±10% 1/2W	2
R606	Carbon R, 820 ohm ±10% 2W	1
R603	Oxied Metal Film, 680 ohm ±10% 2W	1
	Capacitor-	
C601,C604, C605	Paper, 0.01 μF ±20% 400WV	3
C607	Electrolytic, 220 μF −10% −+100% 10WV	1
C606	Electrolytic, 220 μF −10% −+100% 25WV	1
C608	Electrolytic, 470 μF −10% −+100% 35WV	1
C609	Electrolytic, 47 μF −10% −+100% 3WV	1

PARTS LOCATION

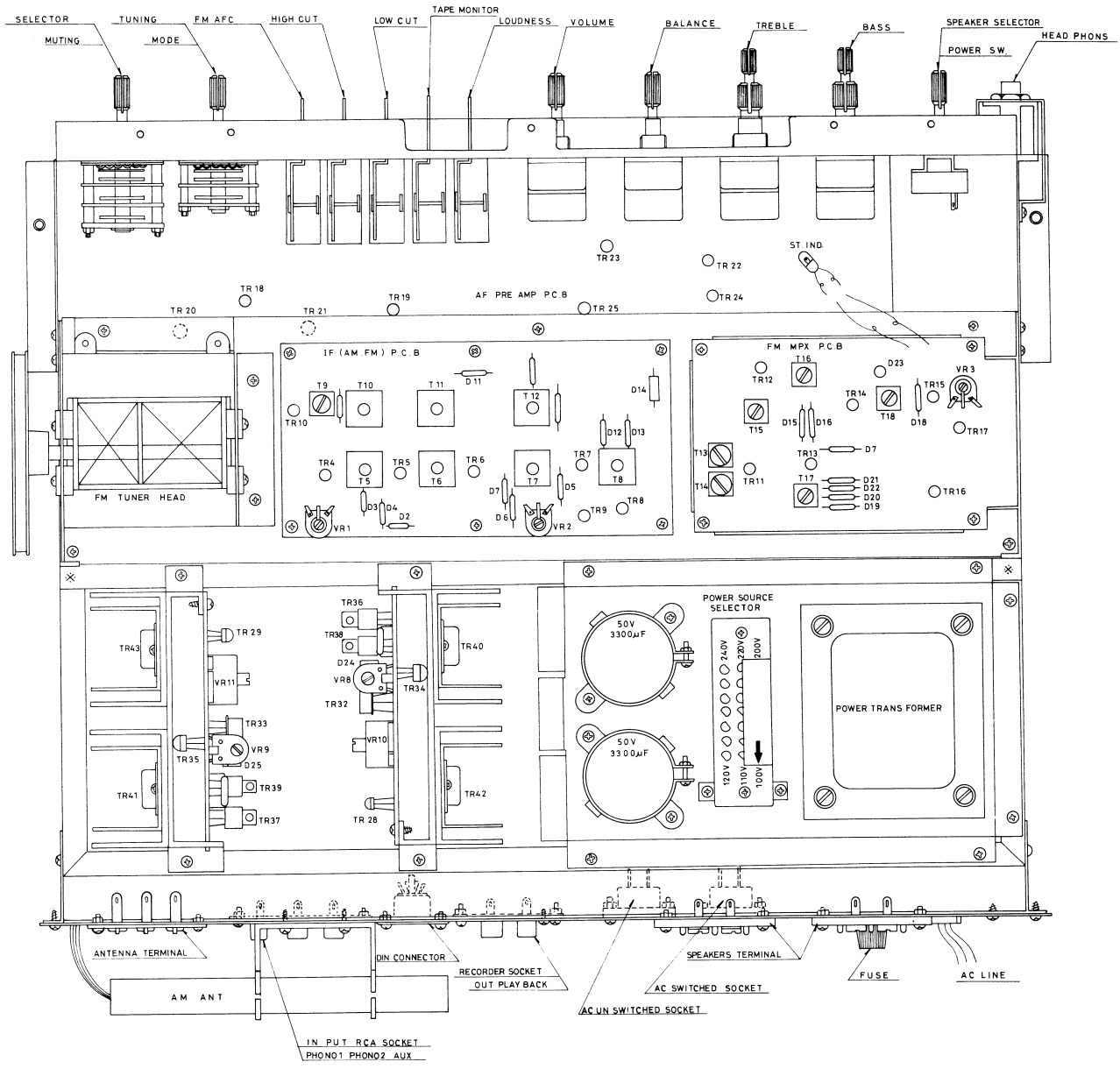

PARTS LIST

Ref. No	Parts No.	Description	Q'ty
Electrical Parts(*1—IF Circuit)			
*1	1310-4001-13300	PCB Assy-IF Circuit	1
	4-2269-21410	Printed Circuit Board	1
VR2	4-2229-21400	VR-TUNER BIAS,20 Kohm-B Type	1
VR1	4-2229-21410	VR-MUTING BIAS,5 Kohm-B Type	1
T10	4-2569-20600	IF Trans AM-IFT AM 1st	1
T11	4-2569-20610	IF Trans AM-IFT AM 2nd	1
T12	4-2569-20620	IF Trans AM-IFT AM 3rd	1
T9	4-2569-20530	OSC Coil AM	1
T5	4-2569-20630	IF Trans FM-IFT FM 2nd	1
T6	4-2569-20640	IF Trans FM-IFT FM 3rd	1
T7	4-2569-20650	IF Trans FM-IFT FM 4th	1
T8	4-2569-20660	IF Trans FM-Detector	1
	4-2369-20630	Tab	16

Ref. No.	Description	Q'ty
TR4,TR5,TR6	Transistor-2SC930	3
TR10	Transistor-2SC929	1
TR8,TR9	Transistor-2SC536	2
TR7	Transistor-2SC772	1
D2,D3,D4,D5,D6, D7,D12,D13,D11, D8,D9,D10	Diode-1S188	12
D14	Diode-SZ9	1
D34,D35	Diode-DS410	2
	Resistor-	
R206	Carbon R,2.7 Kohm, ±10%, 1/4W	1
R231	Carbon R,4.7 Kohm, ±10%, 1/4W	1
R238,R243	Carbon R,6.8 Kohm, ±10%, 1/4W	2
R240	Carbon R,15 Kohm, ±10%, 1/4W	1
R230	Carbon R,22 Kohm, ±10%, 1/4W	1
R246,R242,R227	Carbon R,22 ohm, ±10%, 1/4W	3
R223,R241	Carbon R,68 ohm, ±10%, 1/4W	2
R205,R208,R211, R216,R218,R237	Carbon R,100 ohm, ±10%, 1/4W	6
R210,R213,R209	Carbon R,220 ohm, ±10%, 1/4W	3
R235	Carbon R,680 ohm, ±10%, 1/4W	1
R217	Carbon R,820 ohm, ±10%, 1/4W	1
R220,R236,R244	Carbon R,1 Kohm, ±10%, 1/4W	3
R219,R229,R212	Carbon R,1.2 Kohm, ±10%, 1/4W	3
R226,R228,R234	Carbon R,2.2 Kohm, ±10%, 1/4W	3
R232	Carbon R,8.2 Kohm, ±10%, 1/4W	1
R207	Carbon R,4.7 Kohm, ±10%, 1/4W	1
R221,R222,R215	Carbon R,6.8 Kohm, ±10%, 1/4W	3

Ref. No.	Description	Q'ty
R245	Carbon R,10 Kohm, ±10%, 1/4W	1
R233,R214	Carbon R,15 Kohm, ±10%, 1/4W	2
R239	Carbon R,56 Kohm, ±10%, 1/4W	1
R225	Carbon R,82 Kohm, ±10%, 1/4W	1
R224	Carbon R,330Kohm, ±10%, 1/4W	1
R201	Carbon R,27 Kohm, ±10%, 1/4W	1
R203	Carbon R,2.7 Kohm, ±10%, 1/4W	1
R204	Carbon R,1.5 Kohm, ±10%, 1/4W	1
	Capacitor-	
C232	Plastic Film, 360 μμF ±10%, 50WV	1
C234,C238	Plastic Film, 820 μμF, ±10%, 50WV	2
C214	Plastic Film, 1,000 μμF, ±10%, 50WV	1
C207	Electrolytic, 1 μF, −10%−+150%, 10WV	1
C203,C217,C222	Electrolytic, 10 μF, −10%−+150%, 10WV	3
C240	Electrolytic, 33 μF, −10%−+150%, 10WV	1
C236	Electrolytic, 47 μF, −10%−+150%, 16WV	1
C224	Aluminum Solid, 0.2 μF, ±20%, 20WV	1
C231,C243	Mylar, 0.0047 μF, ±20%, 50WV	2
C244,C246	Mylar, 0.01 μF, ±20%, 50WV	2
C247	Mylar, 0.068 μF, ±20%, 50WV	1
C225	Mylar, 0.1 μF, ±20%, 50WV	1
C233	Ceramic TH N470, 15 μμF, ±5%, 25WV	1
C211	Ceramic SL, 15 μμF, ±5%, 50WV	1
C227	Ceramic SL, 25 μμF, ±10%, 50WV	1
C210	Ceramic SL, 50 μμF, ±10%, 50WV	1
C223	Ceramic SL, 100 μμF, ±10%, 50WV	1
C220,C221	Ceramic SL, 200 μμF, ±10%, 50WV	2
C206	Ceramic YR, 0.0047 μF, ±20%, 50WV	1
C209	Ceramic YG, 0.005 μF, −20%−+80%, 25WV	1
C213	Ceramic YR, 0.01 μF, ±20%, 50WV	1
C201,C202,C204, C205,C216,C218 C219,C226,C229, C230,C249	Ceramic YG, 0.02 μF, −20%−+80%, 25WV	11
C208,C212,C214, C228,C235,C237, C239,C241,C242, C245,C248	Ceramic YG, 0.04 μF, −20%−+80%, 25WV	11

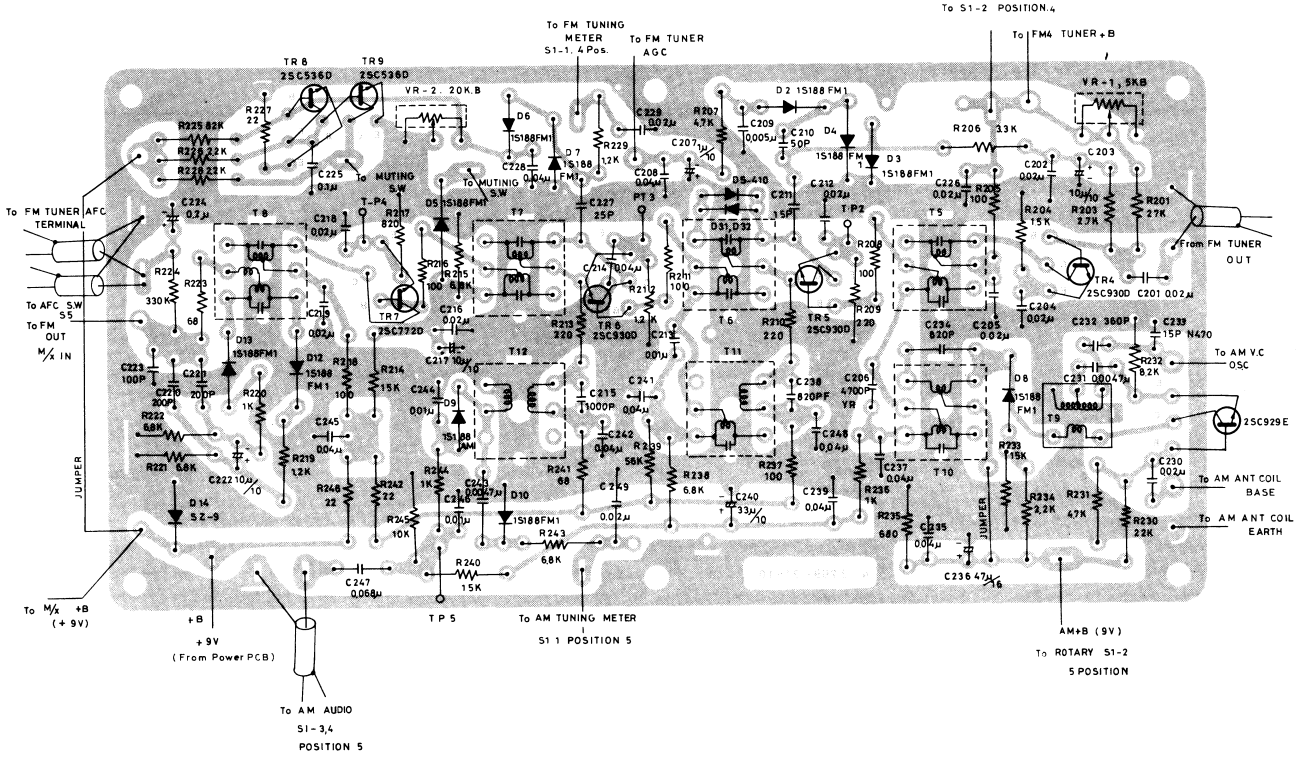

ADJUSTMENT

AM ADJUSTMENT

Step	Adjusting circuit	Connections		SG. frequency	Position of tuning dial	Adjustment	V.T.V.M. Oscilloscope
		Input	Output				
1	IF	Connect sweep generator to VC.	Connect oscilloscope to test point TP5.	455 KHz (400 Hz 30% modulation)	Near max. capacity of VC. at position with no unrequred signal.	T10 upper & lower core T11 upper & lower core T12 core	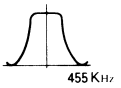
2	RF	Connect standard loop antenna to output terminals of SG. Place receiver 60 cm from loop antenna.	Connect V.T.V.M. to speaker terminals or test point TP5.	600 KHz (400 Hz, 30% modulation)	600 KHz	AM bar antenna T9	Max.
3				1400 KHz (400 Hz, 30% modulation)	1400 KHz	TC4 TC5	Max.
4	Repeat adjustments						

PREPARE

1. Variable capacitor completely closed.
2. Set the dial pointer to very left line dial scale.
3. Connect sweep generator. SG, V.T.V.M. and oscilloscope.
4. Selector switch to "AM". Volume knob to MAX. The frequency response is flat.
5. Use a screwdriver with plastic grip for all adjustments.

FM ADJUSTMENT

Step	Adjusting circuit	Connections		SG frequency	Position of tuning dial	Adjustment	V.T.V.M. Oscilloscope
		Input	Output				
1	IF	Connect sweep generator to test point TP1 through 0.01 μF.	Connect oscilloscope to test point TP4.	10.7 MHz (non modulation)	Near max. capacity of VC. at position with no unrequred signal.	T4 T5 upper & lower core T6 〃 T7 〃	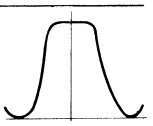
2	Ratio Det.		Connect oscilloscope to R223, C223, R224.			T8 upper & lower core	
3	RF	Connect FM SG. to FM ANT. terminals.	Connect V.T.V.M. to speaker terminal.	90 MHz (400 Hz, 30% modulation)	90 MHz	T1 T2 T3	Max.
4				106 MHz (400 Hz, 30% modulation)	106 MHz	TC1 TC2 TC3	Max.
5	Repeat adjustments.						

PREPARE

1. Variable capacitor completely closed.
2. Set the dial pointer to very left line of dial scale.
3. Connect sweep generator, FM SG, V.T.V.M. and oscilloscope.
   FM antena input impedance is 300 ohm.
4. Selector switch to "FM"
5. Use a screwdriver with plastic grip for all adjustments.

FM MPX ADJUSTMENT

Step	Adjusting circuit	Connections		Position of tuning dial	Adjustment	V.T.V.M.
		Input	Output			
1	SCA signal filter (67 KHz)	Add SCA signal to FM stereo SG. to FM ANT. terminals. FM stereo signal OFF.	Connect V.T.V.M. to C304, R301, R302 terminal.	Near max. capacity of VC. at position with no unrequred signal.	T13 T14	Max.
2	19 KHz pilot signal	Connect FM stereo SG. to FM ANT terminals. 19 KHz signal ON. SCA signal OFF.	Connect V.T.V.M. to C310, R309, R311 terminal.		T15 T16	Max.
			Connect V.T.V.M. to C315 (+) terminal.		T18	Max.
3	FM stereo signal separation	Connect FM stereo SG to FM ANT terminals. 19 KHz signal ON. Main channel, sub channel signal ON. Add 1000 Hz signal from L Ch.	Connect V.T.V.M. to R speaker terminal.		T17 VR3	Min.
4		Connect FM stereo SG to FM ANT terminals. 19 KHz signal ON. Main channel, sub channel signal ON. Add 1000 Hz signal from R Ch.	Connect V.T.V.M. to L speaker terminal.		T17 VR3	Min.
5	Repeat steps 3～4. Set at position with max. channel separation.					

PREPARE

1. Variable capacitor completely closed.
2. Connect FM stereo SG. and V.T.V.M.
3. Selector switch to "FM AUTO"
4. Use a screwdriver with plastic grip for all adjustments.

PARTS LIST

Ref.No.	Parts No.	Description	Q'ty
Cabinet			
	1310-1101-01000	Cabinet Assy	1
1	1312-1101-16200	Cabinet	1
7	1312-6201-12600	Plate Heat Sink	1
8	1312-6201-12700	Plate Heat Sink	1
	1312-6101-12300	Plate Shield	1
3	1312-1804-10300	Leg Rubber	4
16	1310-1001-16700	Knob Assy-POWER,MUTING, SPEAKER,BALANCE,VOLUME, MODE,SELECTOR	7
17	1310-1001-17100	Knob Assy-TUNING	1
33	1310-1001-16600	Knob Assy-BASS,TREBLE	2
34	1312-1602-10800	Knob Indicate-BASS,TREBLE	2
18	1310-1001-16900	Knob Assy-LOUDNESS,TAPE MONI, LOW FILTER,FM AFC, HIGH FILTER	5
Chassis			
24	1312-3301-15300	Chassis	1
27	1312-3305-12600	Panel Front	1
10	1312-3304-14100	Plate Dial Rear	1
13	1312-6308-10601	Filter	1
	1312-6308-10700	Filter	2
12	1312-3624-10900	Mount Headphone Jack	1
26	1312-3701-10300	Mount Electric Part-TUNING METER	1
32	1312-3701-10400	Mount Electric Part-STEREO INDICATOR	1
9	1312-4106-12200	Metal Mount Pulley	2
15	1312-1201-17000	Plate Dial	1
	1310-3003-11801	Shaft Dial Assy	1
	1310-3011-10900	Pointer Assy	1
29	1312-4107-10000	Pulley	5
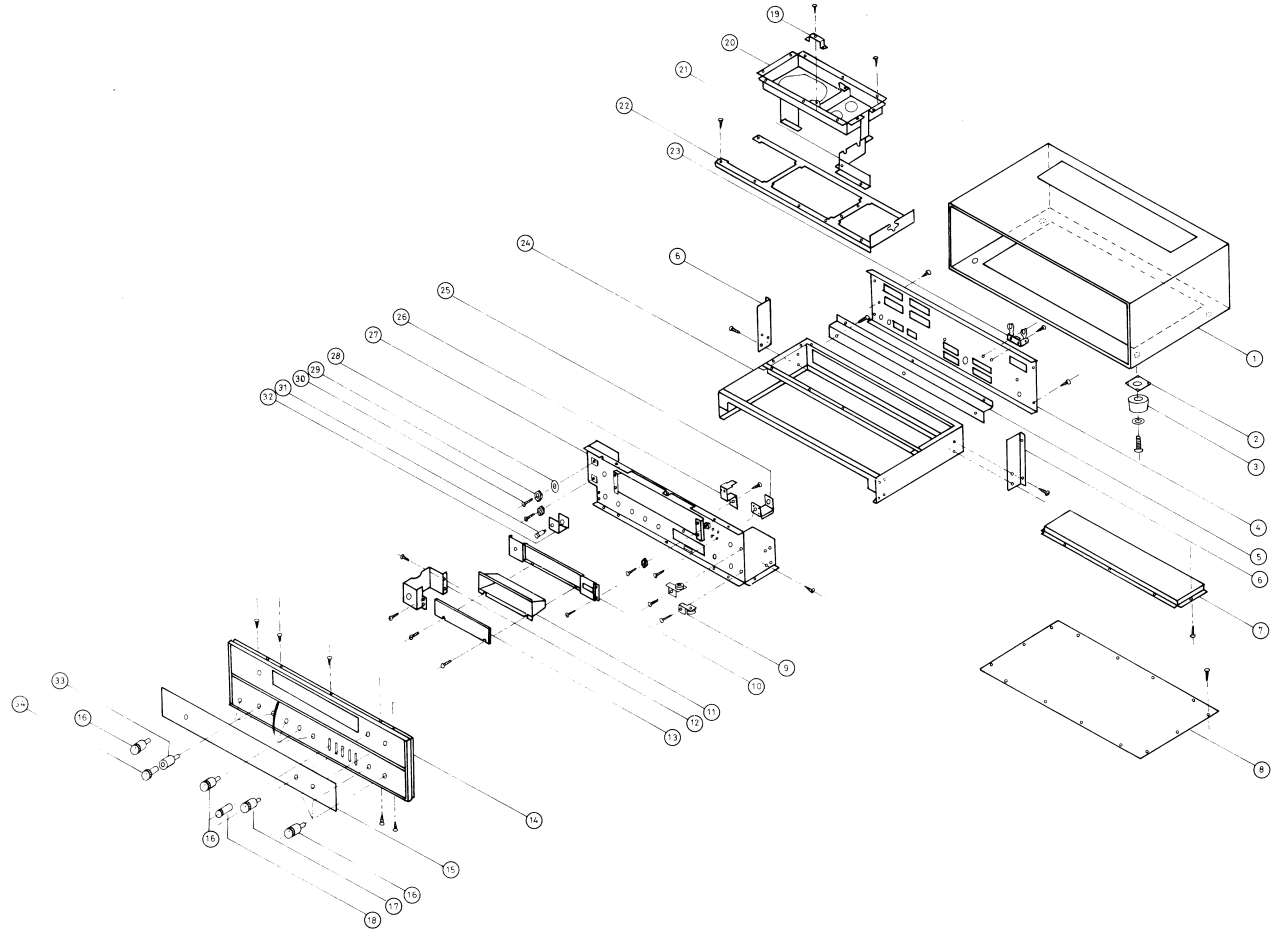
Ref.No.	Parts No.	Description	Q'ty
30	1312-4108-00100	Spindle Pulley	5
	1312-4112-10010	Rope	1
	1312-4111-00100	Spring Rope	1
	1310-3002-10200	Drum Assy	1
	1312-6111-10300	Bushing-Dial Lamp	3
22	1312-3614-10900	Mount PCB-IF, MPX Printed Crcuit Assy	1
21	1312-3625-10100	Metal Variable Capacitor-Tuner Head	1
20	1312-3617-10600	Metal Mount Trans-Power Trans	1
	1310-3015-10300	Plate Heat Sink Assy-Power Transistor	2
4	1312-3306-11400	Panel Rear	1
6	1312-3310-10800	Metal Support-Panel Rear	2
5	1312-3307-10800	Metal Reinf Chassis-Panel Rear	1
14	1310-1016-11300	Panel Decorate Assy Panel Control Sash Sash Metal Mount Sash	1
31	1312-1504-10400	Plate Sign-STEREO INDICATOR	1
11	1312-6110-11600	Shelter Light	1
	1312-5201-10200	Rubber Variable Capacitor-Variable Capacitor	4
	1312-6111-10000	Bushing-STEREO INDICATOR	1
	1312-6111-11000	Bushing-Power Cord 2P	1
	1312-6111-11200	Bushing-Power Cord 3P	(1)
	1312-4201-11100	Screw-Variable Capacitor	4
	1312-3608-00200	Cramp Wire-AM Antenna Wire	1
	1312-3609-10100	Fixing Feeder	1
23	1310-3008-11400	Support Antenna Assy-Bar Antenna	1
19	1312-3701-10700	Mount Electric Part-Rectifier	1
	1312-6202-10700	Fin-Transistor 2N3567	2
2	1312-4203-12901	Washer-Leg Rubber	4
	1312-6308-11800	Filter	1