SANYO

SOLID-STATE STEREO

MODEL DC-534N

SERVICE MANUAL

SANYO ELECTRIC CO., LTD.

INTERNATIONAL DIVISION : SANYO ELECTRIC TRADING CO., LTD.
OSAKA, JAPAN

SPECIFICATIONS

TUNER, AMPLIFIER

Circuitry :	28 transistors, 14 diodes 2 transistor MW/SW/FM/FM MPX tuner & amplifier
Transistors :	2SC668 ×4, 2SC545 ×2, 2SC537 ×2 2SB400 ×8, 2SB22 ×2, 2SB186 ×1 2SB407 ×4, 2SA202 ×5
Diodes :	1S553 ×1, 1S188 ×13
Silicon Rectifiers :	1S559 ×2
Frequency Range :	MW 535~1,605 KHz FM 88~108 MHz SW 4~12 MHz
Intermediate Frequency :	AM 455 KHz FM 10.7 MHz
Sensitivity :	AM 100 μv/m (S/N 30 dB 30% modulation) FM 1 μV (S/N 30 dB 30% modulation)
MPX Separation :	35 dB (at 1,000 Hz)
Output Power :	12 W+12 W Total 24 W (less than 5%, CPO) 24 W+24 W Total 48 W (music-power)
Frequency Range :	20~20,000Hz ±1 dB
Input Impedance and Sensitivity :	TAPE HEAD 50 K ohm 3 mV/12 W PHONO 50 K ohm 5 mV/12 W
Tone Controls :	Bass 100 Hz ±10 dB, Treble 10 KHz±10 dB
Noise Filter :	9 KHz −10 dB
Rumble Filter :	60 Hz −10 dB
Functionable Temperature:	Up to 40°C
Warming-Up Time :	0.5 Second
Power Source :	100/117/130/200/220/240 V AC 50 Hz 60 Hz
Power Consumption :	47.8 VA 42.2 W/H (no signal 50 Hz)
Dimention :	617 (W)×390 (D)×255 (H) mm
Net weight :	14.4 kg

PLAYER

Player :	With Idler OFF Lifter Player
Motor :	4-Pole induction motor
Turntable Speed :	33-1/3, 45 r.p.m
Turntable :	30 cm with sheet
Pick-up :	Moving magnetic type stereo cartridge model MC-2 with diamond stylus ST-5D
Output :	5 mV (1,000 Hz 50 mm/sec)
Stylus Presure :	3 g

SPEAKER

Speaker :	16 cm high-compliance speaker ×2 Woofer 8 cm ×2 Tweeter
Power Hndling Capacity :	20 W
Impedance :	8 ohm
Dimention :	235 (W)×215 (D)×372 (H) mm
Net weight :	4.7 kg

ADJUSTMENT

AM ADJUSTMENT

Step	Adjusting Circuit	Connections Input	Connections Output	SG frequency	Position of tuning dial	Adjustment	V.T.V.M, Oscilloscope
1	IF	Connect sweep generator to AM ANT. terminals.	Connect oscilloscope to test point TP_4.	455 KHz (400 Hz 30% modulation)	Near max. capacity of VC. at position with no unrequred signal.	IFT_A—1_{AB} IFT_A—2 IFT_A—3	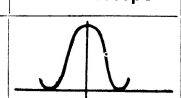
2	RF	Connect standard loop antenna to output terminals of SG. Place receiver 60 cm from loop antenna.	Connect V.T.V.M to speaker terminals	600 KCHz (400 Hz 30% modulation)	19.83 mm	W 2040A W 8015	Max.
3				1400 KCHz (400 Hz 30% modulation)	90.53 mm	TC_4 TC_5	Max.
4	Repest adjustments.						

PREPARE

1. Variable capacitor completely closed
2. Set the dial pointer to very left line of dial scale.
3. Connect sweep generator, SG, V.T.V.M. and oscilloscope.
4. Silector switch to "MW", "SW".
5. Use a screwdriver with plastic grip for all adjustments

PARTS LIST

Parts No.	Description	Q'ty
	Transistor 2SB400 TR14, 15, 16, 17, 18, 19, 20, 21	8
	〃 2SB22 TR22, 23	2
	〃 2SB407 TR24, 25, 26, 27	4
	Varicap 1S553 D3	1
	Diode 1S188 (FM1) D1, 2, 4, 5, 6, 7, 8,15, 16,	9
	〃 1S188 (FM2) D9, 10,11,12	4
GS-S1036	Silicon rectifier 1S559 D13, 14	2
GS-C1016A	Variable capacitor	1
GS-C9008	Electrolytic capacitor 2000μF 400WV C410	1
GS-C9025	〃 500μF 30WV C403, 404	2
GS-C9026	〃 300μF 40WV C402	1
GS-W6013	I.P.T.	2
GS-W2045	Antenna coil	1
GS-W3037	RT coil	1
GS-W8017	Oscillater coil	1
GS-W3035	IF trap	1
GS-W1002	Heater choke coil	1
GS-C0009	Trimmer capacitor 1—10pF	1
GS-W5W001	I.F.T. FM	1
GS-W5W002	〃 〃	2
GS-W5W003	〃 〃	1
GS-W5T017	〃 〃	1
GS-W5W004	〃 〃	1
GS-W5F005	Detector transformer FM	1
GS-W2052	Antenna coil AM	1
GS-W8015	Oscillater coil AM	1
GS-W5W005	I.F.T. AM	1
GS-W5W006	〃 AM	1
GS-W5T018	〃 AM	1
GS-W5T019	〃 AM	1
GS-W5S001	M/X transformer FST-1	1
GS-W5S002	〃 FST-2	1
GS-W5S003	〃 FST-3	1
GS-W5S004	〃 FST-4	1
GS-41111	Printed circuit board RF	1
GS-41045	〃 MX	1
GS-41112	〃 AF	1
GS-S1047	Fuse 2A	1
	〃 3A	1
GS-R1100	Variable resistor 50K (A)×2	2
GS-R1101	〃 50K (A)×2	1
GS-R1095	〃 50K (A)	1
GS-S4089A	Power switch	1
GS-S4113	Rotary switch	1
GS-S1007	2P PU socket	2
GS-S1078	4P PU socket	1
GS-S1071	5P socket	1
GS-S1040	4P socket	3
GS-S1045	4P plug	1
GS-S2021	3P socket	1
GS-S1013	US waher socket	1
GS-S1012	US plug	1
GS-S2042	10P socket	1
GS-S1090	10P plug	1
GS-S2007	MT socket	2
GS-S1039	MT plug	2
GS-S1054	Pilot lamp 6V 25mA	1
GS-S1006	〃 6.3V 0.2A	1
GS-S1059	3P terminals	1
GS-S8566	-PL socket assembly	1
	-E-10 mounting metal	1
GS-11958	-PL fixing angle	1
GS-S2030A	Headphone jack	1
GS-S4051	6P see saw switch	2
GS-S3007	1-4P lug board	5
GS-S3054	2P special lug board	1
GS-S1038	Cord tip plug	3
GS-S3048	Power cord	1
GS-S3009	1-2P lug board	1
GS-S4070	Voltage selector switch	1
GS-W7045AT	Power transformer	1
GS-C0003	4 gang trimmer capacitor	1
GS-W8019	Oscillater coil SW	1

SPEAKER BOX

Parts No.	Description	Q'ty
GS-46317	Speaker box	2
GS-46318	Baffle board	2
GS-S8580	Sash assembly	2
GS-27054	-Sash	4
GS-27052	-Sash	4
GS-11778	-Sash fixing metal	8
	Net	2
GS-42610	Back board	2

Parts No.	Description	Q'ty
GS-S8575	Badge assembly	2
GS-26242	-Badge metal	2
GS-32083	-Badge base	2
	Felt	2
GS-11998	Cord fixing board	2
GS-111086	Fixing metal	2
GS-S6105	Speaker WOOFER	2
GS-S6076	Speaker TWEETER	2
GS-S3083	Speaker cord assembly	2
GS-S1045	-4P plug	2
	-Speaker cord	2
GS-S3054	1-1P (L) lug board	2
	Electrolytic capacitor AC type 3μF ±50%, 15WV C501, C502	2

PLAYER UNIT

Parts No.	Description	Q'ty
GS-S8503	Motor board assembly	1
GS-11883	-Motor board	1
GS-24317	-Bush	1
GS-14069	-Boss	2
GS-14074	-Actuating lever stand	1
GS-14066	-Cushion spring boss	2
GS-11123	- 〃	1
GS-11895	- 〃	1
GS-S8414	Arm rest assembly	1
GS-35034	-Arm rest	1
GS-15164	-Arm rest clip	1
GS-15165	-Arm rest pole	1
GS-S8430	Turn table seat	1
GS-44066	-Turn table rubber seat	1
GS-26167	-Turn table rubber seat name plate	1
GS-S8416	Speed selector indicate plate assembly	1
GS-33094	Speed selector indicate plate base	1
GS-24283	Nut	2
GS-26175	Speed selector indicate plate	1
GS-28015	Speed selector lever	2
GS-13013	Clamp spring	2
GS-14039	Clamp screw	2
GS-33113	45 EP adaptor	1
GS-23011	45 EP adaptor pin	1
GS-S8518	Lifter assembly	1
GS-11896	Connector	1
GS-44073	Rubber bush	2
GS-15184	Connecting rod	1
GS-37006	Nylon washer	2
GS-24318	Distant color	1
GS-24319	Ornamental boss	1
GS-39053	Arm support	1
GS-15184	Brake spring	1
GS-27037	Knob shaft	1
GS-S8519	Actuating cam assembly	1
GS-11897	-Actuating cam	1
GS-14070	-Connect pin	1
GS-13015	-Boll fixing spring	1
	Steel boll	1
GS-S8520	Actuating lever assembly	1
GS-11898	〃	1
GS-14071	Actuating cam pin	1
GS-S8521	Connect bar assembly	1
GS-11899	-Connect bar (A)	1
GS-11900	-Connect bar (B)	1
GS-14072	-Knob pin	1
GS-14073	Slide boss	1
GS-33111	Lifter name plate base	1
GS-26209	Lifter name plate	1
GS-15159	Cushion spring (A)	3
GS-15160	Cushion spring (B)	1
	Washer	1
GS-27038	Turn table	1
GS-11814	Shield case	1
GS-11815	Shield cover	1
GS-11775	Cord fixing	1
GS-26210	PU base	1
GS-S6093	Pick-up assembly	1
GS-W9009	Cartridge	1
GS-S3013	1—3P lug	1
GS-S3071	AC cord assembly	1
	-Cord	1
GS-S1046	-3P plug	1
GS-S3072	Shield wire assembly	1
GS-S47011	-Mark (L)	1
GS-S47011	-Mark (R)	1
GS-S1063	-PU plug (L)	1
GS-S1063	-PU plug (R)	1
	-Parallel shield wire	1
GS-S5025	Motor assembly	1
	Paper capacitor 0.05μF ±20% 400WV	1

Printed in Japan

FM ADJUSTMENT

Step	Adjusting Circuit	Connections		SG frequency	Position of tuning dial	Adjustment	V.T.V.M. Oscilloscope
		Input	Output				
1	IF	Connect sweep generator to test point TP_1 (TR_2 emitter) through 0.01 μF.	Connect oscilloscope to test point TP_2 (D_6 & R_{138} 100 Kohm).	10.7 MHz (Non modulation)	Near max. capacity of VC. at position with no unrequred signal.	IFT_F—1_{AB} IFT_F—2_{AB} IFT_F—3 IFT_F—4_{AB} (primary)	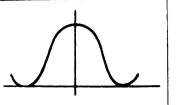
2	Ratio Det.		Connect oscilloscope to test point TP_3 (IFT_F—4_{AB}).	〃		IFT_F-4_{AB} (secondary)	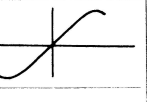
3	RF	Connect FM SG. to FM ANT terminals.	Connect V.T.D.M to test point TP_2.	88 M Hz (400 Hz 30% modulation)	6.82 mm	W2045 W3037 W8017	Max.
4				108 MHz (400 Hz 30% modulation)	97.90 mm	TC_1 TC_2 TC_3	Max.
5	Repeat adjustments.						

PREPARE

1. Variable capacitor completely closed.
2. Set the dial pointer to very left line of dial scale.
3. Connect sweep generator, FM SG, V.T.V.M. and oscilloscope. FM antena input impedance is 75 ohm.
4. Selector switch to "FM"
5. Use a screwdriver with plastic grip for all adjustments.

FM MPX ADJUSTMENT

Step	Adjusting circuit	Connections		Position of tuning dial	Adjustment	V.T.V.M.
		Input	Output			
1	SCA signal filter	Add SCA signal to FM stereo SG to FM ANT terminals. FM stereo signal OFF.	Connect V.T.V.M to tast point TP_7.	Near max. Capacity of VC. at position with no unrequred signal.	FST-4	Min.
2	19 KC pilot signal	Connect FM stereo SG to FM ANT terminals. 19KHz signal ON. SCA signal OFF.	Connect V.T.V.M to tast point TP_8.		FST-1	Max.
3	FM stereo signal separation	Connect FM stereo SG to FM ANT terminals. 19KHz signal ON. Main channel, sub channel signal ON. Add 1000Hz signal from L, CH.	Connect V.T.V.M to test point TP_{10}.		FST-2 FST-3	Max.
4			Connect V.T.V.M to test point TP_9.		〃	Min.
5		Connect FM stereo SG to FM ANT terminals. 19KHz signal ON. Main channel, sub channel signal ON. Add 1000Hz signal from R, CH.	Connect V.T.V.M to tust point TP_9.		〃	Max.
6			Connect V.T.V.M to test point TP_{10}.		〃	Min.
7	Repest steps 3~6. Set at position with max. channel separation.					

PREPARE

1. Variable capacitor completely closed.
2. Connect FM stereo SG., V.T.V.M.
3. Selector switch to "FM STEREO"
4. Use a screwdriver with plastic grip for all adjustments.

DIAL CORD STRINGING

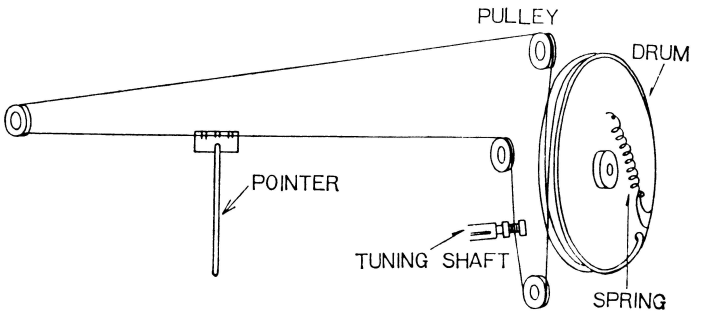

BLOCK DIAGRAM

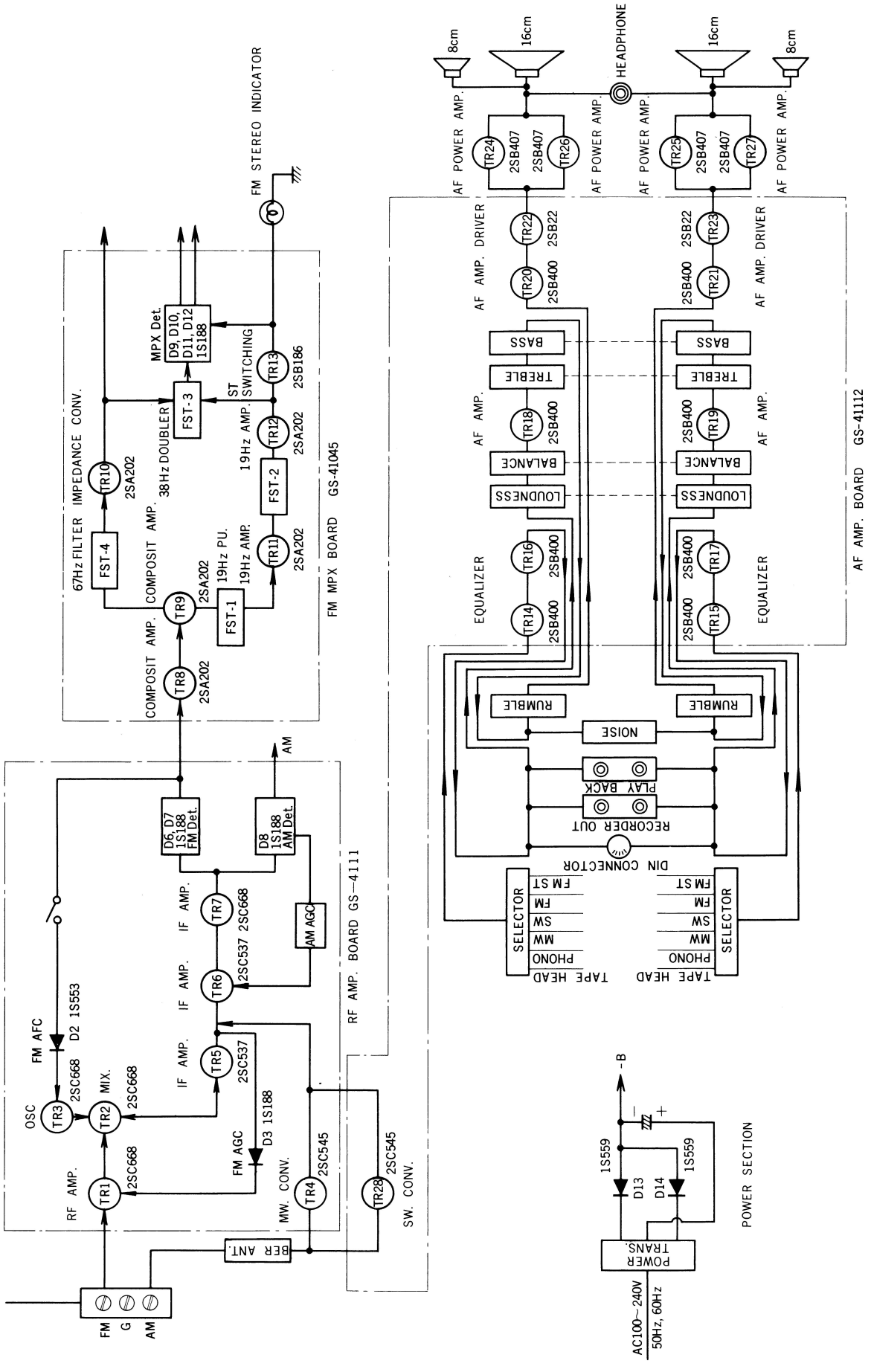

MAIN PARTS LOCATION

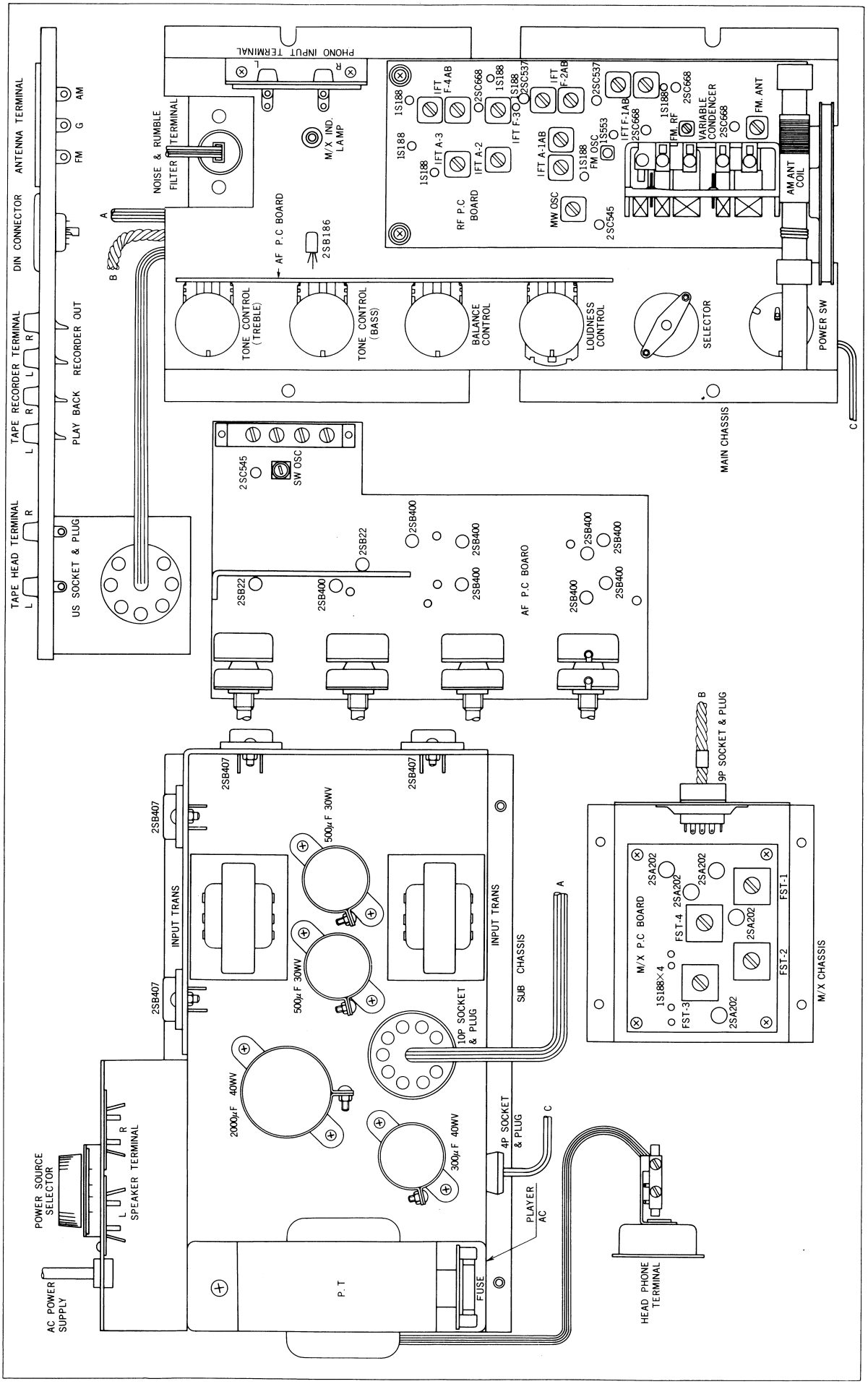

FM MPX P.C. BOARD

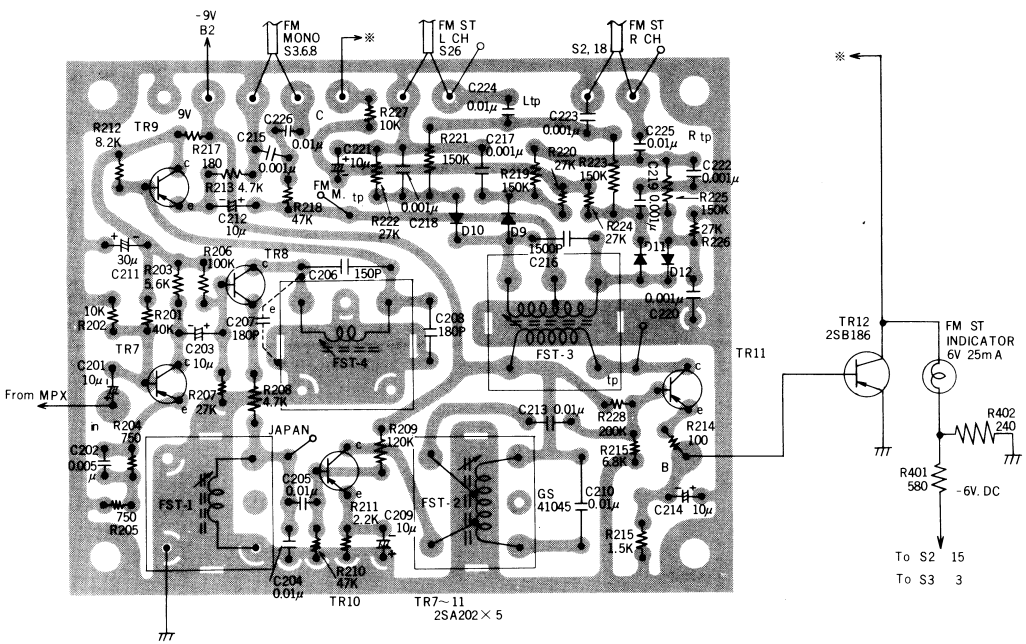

Symbol No.	Description	Q'ty
Resistors		
R214	Carbon ELR 100 ohm ±10% ¼W	1
R217	〃 180 〃 〃 〃	1
R204, 205	〃 750 〃 〃 〃	2
R216	〃 1.5K 〃 〃 〃	1
R211	〃 2.2K 〃 〃 〃	1
R208, 213	〃 4.7K 〃 〃 〃	2
R203	〃 5.6K 〃 〃 〃	1
R215	〃 6.8K 〃 〃 〃	1
R212	〃 8.2K 〃 〃 〃	1
R202, 227	〃 10K 〃 〃 〃	2
R207, 220, 222, 224, 226	〃 27K 〃 〃 〃	5
R201	〃 40K 〃 〃 〃	1
R210, 218	〃 47K 〃 〃 〃	2
R206	〃 100K 〃 〃 〃	1
R209	〃 120K 〃 〃 〃	1
R219, 221, 223, 225	〃 150K 〃 〃 〃	4
R228	〃 470K 〃 〃 〃	1

Symbol No.	Description	Q'ty
Capacitors		
C206	Titanium Disc. (SL) 150PF ±20% 75WV	1
C207, 208	〃 180PF 〃 〃	2
C216	Styrol 1500PF ±10% 50WV	1
C210	〃 0.01μF 〃 35WV	1
C217, 218, 219, 222, 223, 215, 220	Mylar, Vertical 0.001μF ±20% 50WV	7
C202	〃 0.005μF 〃 〃	1
C204, 205, 213, 226, 225, 224	〃 0.01μF 〃 〃	6
C201, 203, 209, 212, 214, 221	Electrolytic, Vertical 10μF-0~+150% 10WV	6
C211	〃 30μF 〃 12WV	1

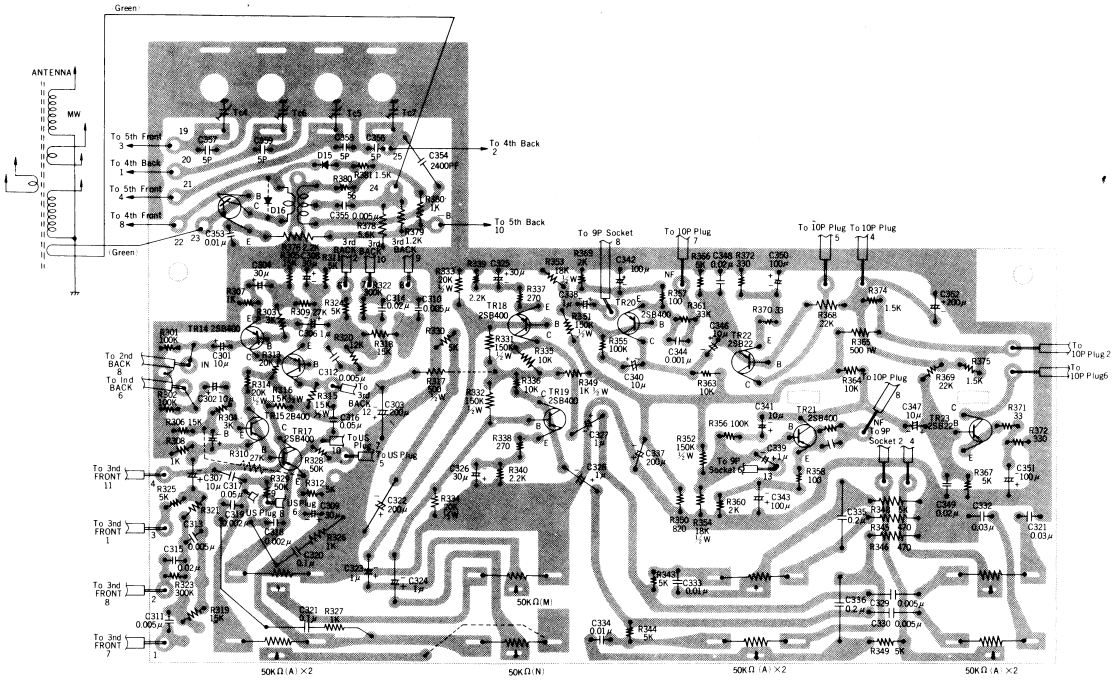

Symbol No.	Description					Q'ty
Resistors						
R317	Carbon RT	500	ohm	±10%	½W	1
R365	〃	500	ohm	〃	1W	1
R349	〃	1K	ohm	〃	½W	1
R370, 371	Cardon ELR	33	ohm	±10%	¼W	2
R357, 358	〃	100	ohm	〃	〃	2
R337, 338	〃	270	ohm	〃	〃	2
R372, 373	〃	330	ohm	〃	〃	2
R350	〃	820	ohm	〃	〃	1
R374, 375, 381	〃	1.5K	ohm	〃	〃	3
R307, 308, 379	〃	1K	ohm	〃	〃	3
R359, 360	〃	2K	ohm	〃	〃	2
R339, 340, 376	〃	2.2K	ohm	〃	〃	3
R303, 304	〃	3K	ohm	〃	〃	2
R311, 312, 324, 325, 330, 343, 344, 347, 348, 366, 367	〃	5K	ohm	〃	〃	11
R335, 336, 363, 364	〃	10K	ohm	〃	〃	4
R320, 321	〃	12K	ohm	〃	〃	2
R318, 319, 305, 306	〃	15K	ohm	〃	〃	4
R361, 362	〃	33K	ohm	〃	〃	2
R368, 369	〃	22K	ohm	〃	〃	2
R309	〃	27K	ohm	〃	〃	1
R345, 346	〃	470	ohm	〃	〃	2
R355, 356, 301, 302	〃	100K	ohm	〃	〃	4
R328, 329	〃	50K	ohm	〃	〃	2
R322, 323	〃	300K	ohm	〃	〃	2
R377	〃	1.2K	ohm	〃	〃	1
R378	〃	5.6K	ohm	〃	〃	1
R380	〃	56	ohm	〃	〃	1

Symbol No.	Description					Q'ty
R326, 327	Carbon R	1K	ohm	±10%	¼W	2
R310	〃	27K	ohm	〃	〃	1
R381	〃	22	ohm	〃	〃	1
R315, 316	Carbon RD	15K	ohm	±10%	½W	2
R353, 354	〃	18K	ohm	〃	〃	2
R313, 314, 333, 334	〃	20K	ohm	〃	〃	4
R331, 332, 351, 352	〃	150K	0hm	〃	〃	4
Capacitors						
C344, 345	Malar Vertical	0.001μF		±20%	50WV	2
C318, 319	〃	0.002μF		〃	〃	2
C310, 311, 312, 313, 329, 330, 355	〃	0.005μF		〃	〃	7
C333, 334, 353	〃	0.01μF		〃	〃	3
C314, 315, 348, 349	〃	0.02μF		〃	〃	4
C331, 332	〃	0.03μF		〃	〃	2
C316, 317	〃	0.05μF		〃	〃	2
C320, 321	〃	0.1μF		〃	〃	2
C335, 336	〃	0.2μF		〃	〃	2
C323, 324, 327, 328, 358, 339	Aluminium Solid	1μF		−20+40%	10WV	6
C301, 302, 346, 340, 341. 347, 306, 307	Electrolytic, Vertical	10μF		0−150%	10WV	8
C304, 305, 308, 309, 325, 326	〃	30μF		〃	6WV	6
C342, 343, 350, 351	〃	100μF		〃	〃	4
C303, 322	〃	200μF		〃	15WV	2
C337, 352	〃	200μF		〃	20WV	2
C354	Styrol	2400pF		±10%	250WV	1
C357, 358	Titanium Disk (SL)	5pF		±0.25%	50WV	2
C356, 359	〃	5pF		〃	〃	2

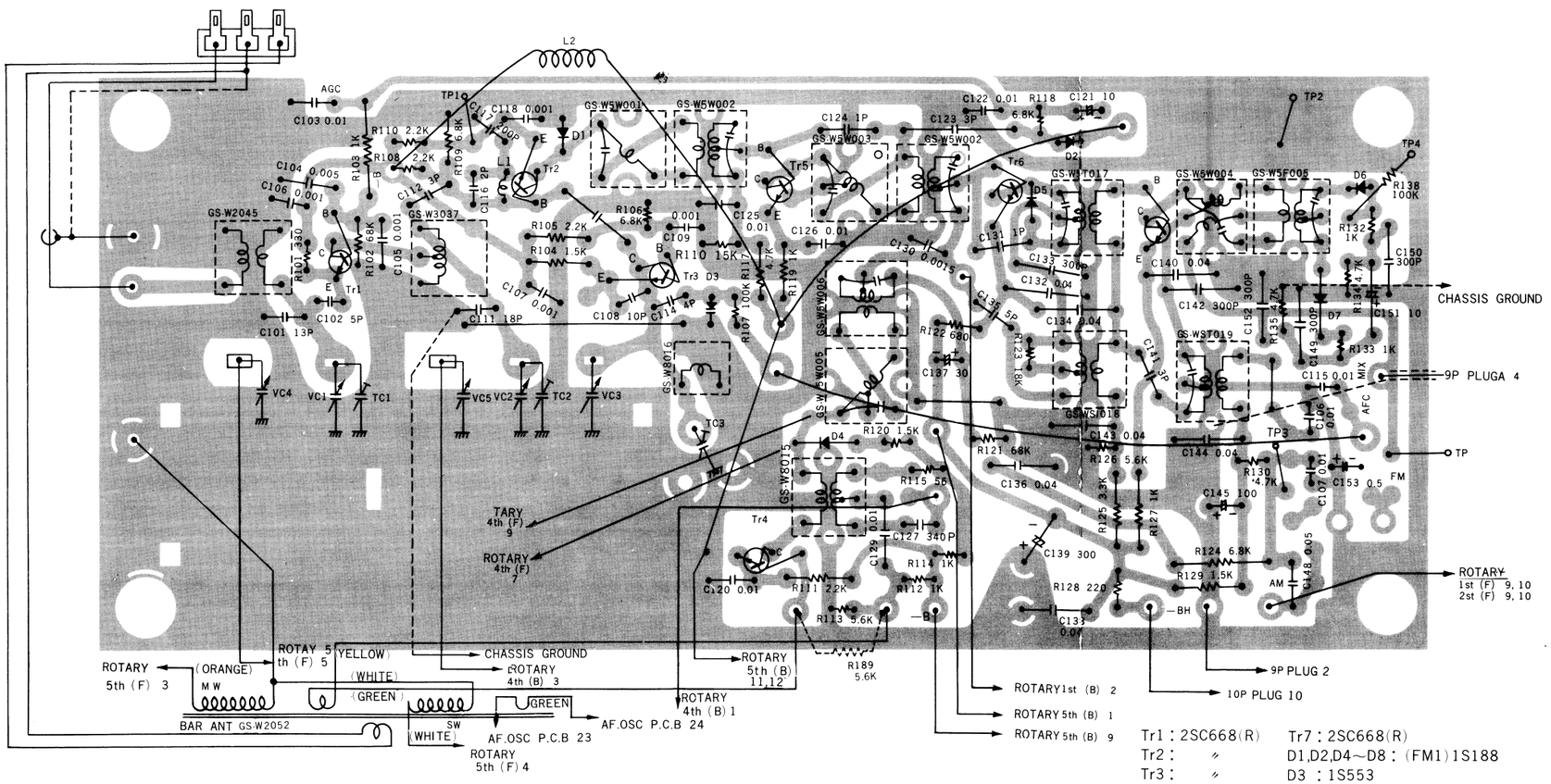

Tr1 : 2SC668(R)
Tr2 : 〃
Tr3 : 〃
Tr4 : 2SC545(R)
Tr5 : 2SC537(R-4)
Tr6 : 〃
Tr7 : 2SC668(R)
D1,D2,D4~D8 : (FM1)1S188
D3 : 1S553

Symbol No.	Description				Q'ty
RESISTORS					
R115	Carbon ELR	56 ohm	±10%	¼W	1
R128	〃	220 ohm	〃	〃	1
R101	〃	330 ohm	〃	〃	1
R131	〃	560 ohm	〃	〃	1
R122	〃	680 ohm	〃	〃	1
R112, 114, 119, 127, 132, 133	〃	1Kohm	〃	〃	6
R104, 120	〃	1.5Kohm	〃	〃	2
R105, 108, 110, 111,	〃	2.2Kohm	〃	〃	4
R125	〃	3.3Kohm	〃	〃	1
R117, 130, 134, 135	〃	4.7Kohm	〃	〃	4
R113, 126	〃	5.6Kohm	〃	〃	2
R116	〃	15Kohm	〃	〃	1
R123	〃	18Kohm	〃	〃	1
R102, 121	〃	68Kohm	〃	〃	2
R107	〃	100Kohm	〃	〃	1
R136	〃	330Kohm	〃	〃	1
R106, 109, 124, 118	〃	6.8Kohm	〃	〃	4
R103	Carbon R	1Kohm	〃	〃	1
R129	〃	1.5Kohm	〃	〃	1
R138	〃	100Kohm	〃	〃	1
R139	〃	5.6Kohm	〃	〃	1
CAPACITORS					
C124, 131	Titamium disc SL	1pF	±0.25pF	50WV	2
C116	〃	2pF	〃	〃	1
C112, 141, 123	〃	3pF	〃	〃	3
C113, 114	〃	4pF	〃	〃	2
C102, 135	〃	5pF	〃	〃	2
C108	〃	10pF	±5%	〃	1
C101	〃	13pF	〃	〃	1
C110	〃 (n750)	15pF	〃	〃	1
C111	〃 SL	18pF	〃	〃	1
C117	〃	200pF	±10%	〃	1
C133, 142, 152, 149, 150	〃	300pF	〃	〃	5
C105, 106, 107, 109, 118	〃	0.001μF	+80% −10	25WV	5
C130, 134	〃 YY	0.0015μF	±20%	75WV	2
C104	〃 YZ	0.005μF	+80% −10	25WV	1
C103, 115, 122, 125, 126	〃	0.01μF	〃	〃	5
C132, 136, 138, 140, 143, 144	〃	0.04μF	〃	〃	6
C127	Styrol	340μF	±5%	35WV	1
C129, 146, 147, 120	Mylar, vertical	0.01μF	±20%	50WV	4
C148	〃	0.05μF	〃	〃	1
C153	Aluminum solid	0.5μF	〃	10WV	1
C121, 151	Electrolytic vertical	10μF	+150% −0	〃	2
C137	〃	30μF	〃	6WV	1
C145	〃	100μF	〃	10WV	1
C139	〃	300μF	〃	15WV	1

CIRCUIT DIAGRAM

PLAYER CIRCUIT DIAGRAM

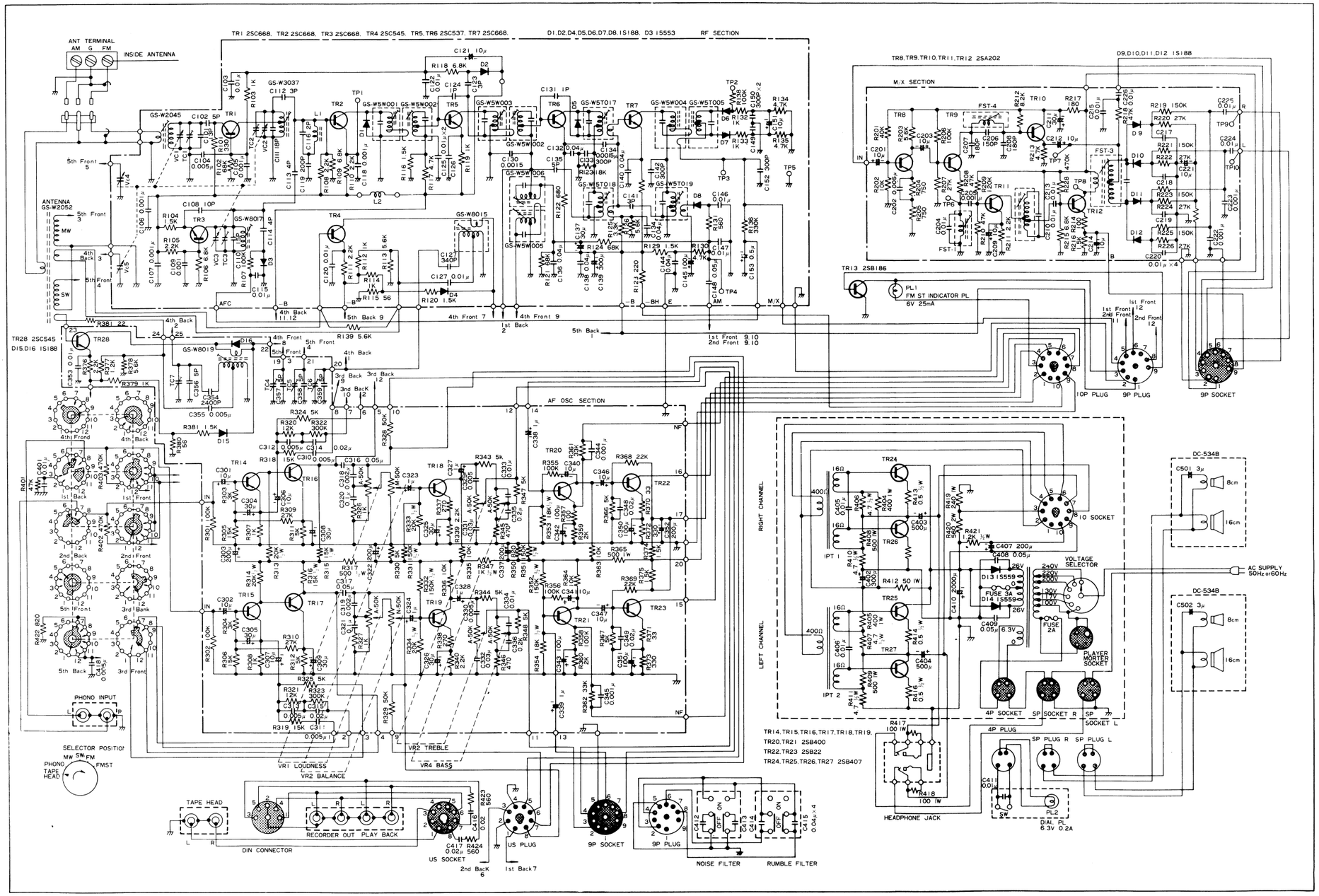

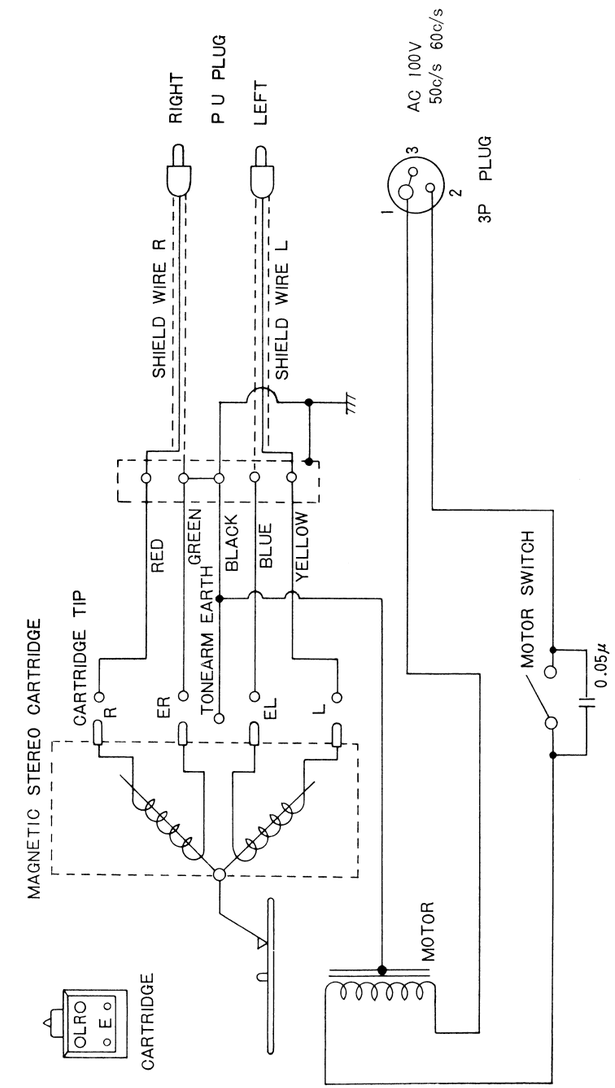

WITHOUT P.C. BOARD

Symbol No.	Description	Q'ty
Resistors		
R413, 414, 415, 416	Winding 0.5 ohm ±10% ½W	4
R412	Carbon RT 50 ohm 〃 1W	1
R404, 405	〃 400 ohm 〃 〃	2
R408, 409	〃 500 ohm 〃 〃	2
R417, 418	〃 100 ohm 〃 〃	2
R406, 407, 410, 411	〃 4.7 ohm 〃 ½W	4
R419	〃 240 ohm 〃 1W	1
R420	〃 560 ohm 〃 2W	1
R421	Carbon RT 1.2K ohm 〃 ½W	1
R401	Carbon R 47K ohm 〃 ¼W	1
R402, 403	〃 470K ohm 〃 〃	2
R422	〃 820 ohm 〃 〃	1
R423, 424	〃 560 ohm 〃 〃	2

Symbol No.	Description	Q'ty
Capacitors		
	Titanium Disc. YZ	
C401	0.01μF +100 −0 50WV	1
	Mylar, Vertical	
C405, 406	0.01μF ±20% 〃	2
	Electrolytic, tubular	
C407	200μF +150 −0 15WV	1
C408, 409	Paper	
	0.05μF ±20% 400WV	2
C411	〃 0.01μF 〃 〃	1
	Mylar vertical	
C412, 413, 414, 415	0.04μF 〃 50WV	4
C416, 417	〃 0.02μF 〃 〃	2
	Titanium disc. SL	
C418	0.005μF +80−20% 25WV	1

PARTS LIST

Parts No.	Description	Q'ty
CABINET		
GS-46354	Cabinet	1
GS-11129	Reinforcing angle	1
SS-42607	Bottom board	1
GS-38051	Lid	1
GS-36121	Sash	1
GS-26241	Name plate	1
GS-S8702	Dial plate assembly	1
GS-39068	-Dial plate frame	1
GS-31030	-Insert screw	4
GS-38077	-Dial plate	1
GS-26332	-Knob pane	1
GS-26246	- 〃	1
GS-26247	- 〃	1
GS-24270	Stud nut	4
GS-S8514	Knob assembly	1
GS-33110	-Konb	1
GS-26207	-Knob decoration	1
GS-S8515	Knob assemble	6
GS-33110	-Knob	6
GS-26208	-Knob decoration	6
GS-43040	Knob felt	7
GS-26236	Badge	1
GS-11990	Headphone cover	1
GS-12033	Jack angle	1
GS-36123	Washer	1
GS-11992	Radiater plate	1
GS-11979	Decoration plate	1
GS-S8574	Stay assembly	1
GS-11658	-Arm El	1
GS-11978	-Arm	1
GS-24260	-Shaft (A)	1
GS-11068	-Arm fixing metal B	1
GS-24261	-Shaft B	1
GS-24335	-Arm mounting metal	1
GS-24336	-Shaft	1
	-Washer	1
	- 〃	5
GS-S8567	Hinge assembly	2
GS-11973	-Hinge metal	2
GS-11974	- 〃	2
GS-15114	-Hinge shaft	2
GS-11971	Reinforcing metal	2
GS-11972	〃 decoration	2
	Cloth	1
GS-26256	Model name plate	1
GS-11936	Special nut	4

Parts No.	Description	Q'ty
CHASSIS		
GS-11981	Chassis	1
GS-11982	Back plate	1
SS-11983	Fixing metal phono terminals	1
GS-11986	〃 ANT	1
GS-11945	〃 ANT	1
GS-11985	Reinforcing angle AF P.C.B.	2
GS-26243	Fin 2SB22	1
GS-S8563	Pointer assembly	1
GS-23062	-Pointer slide metal	1
GS-24330	-Pointer	1
GS-S8548	Dial shaft assembly	1
GS-24325	-Dial shaft	1
GS-S8079	-Shaft metal assembly	1
	-E type ring	1
GS-S8559	Drum assembly	1
GS-32087	-Drum	1
GS-28019	-Drum shaft mounting	1
	Rope spring	1
	Rope	1
	Stopper	1
GS-35024	Pulley	4
GS-14076	Pulley shaft	8
GS-44059	PL holder	5
GS-42606	Paper blind	1
GS-11986	Sub chassis	1
GS-S8626	Fixing metal assembly	1
GS-11987	-Fixing metal	1
GS-11989	-Switch angle	1
GS-26244	Fin 2SB407	1
GS-S8578	Fixing metal assembly	1
GS-11988	-Fixing metal	1
GS-11989	-Socket angle	1
	Cord stopper	2
	Lug	
	Cord pressor	
GS-11952	Fixing metal M/X P.C.B.	1
GS-32082	Sign plate	1
GS-11924	Sign plate decoration	1
GS-12065	Shield plate	2
GS-12066	Fixing metal	2
ELECTRICAL PARTS		
	Transistor 2SC668 TR1, 2, 3, 7	4
	〃 2SC545 TR4, 28	2
	〃 2SC537 TR5, 6	2
	〃 2SB186 TR13	1
	〃 2SA202 TR8, 9, 10, 11, 12	5