Auto cassette deck D4

Service
Service
Service

Versions D4-1
D4-2
D4-3
D4-4

Service Manual

12 V

TABLE OF CONTENTS **Page**

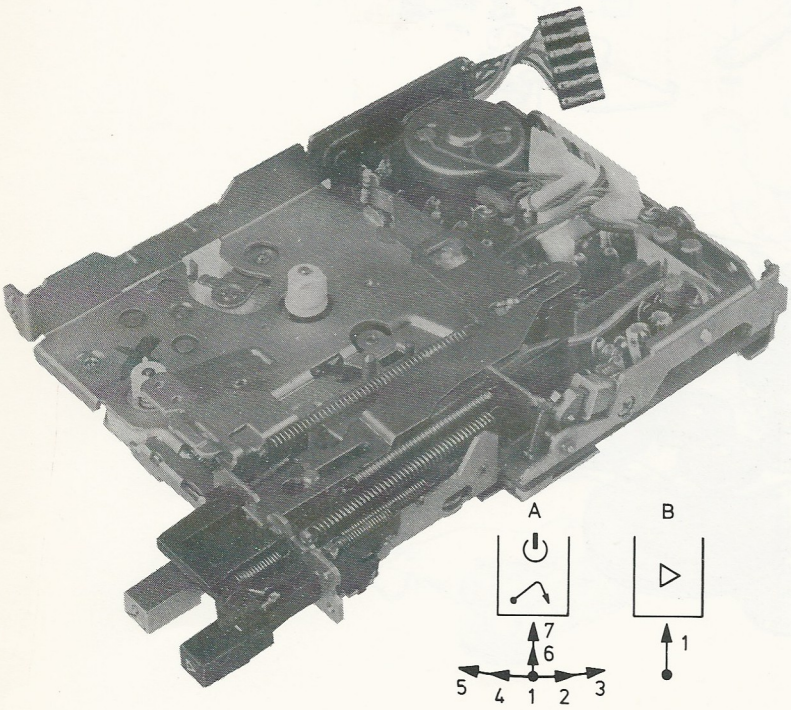

24784A12

OPERATION

A. 1. Rest mode
2. MSS-wind
3. Fast forward
4. MSS-rewind
5. Fast rewind
6. Stand-by
7. Cassette ejection

B. Playback, when A is in stand-by/MSS/fast wind mode.

If a cassette is inserted while the supply voltage is switched on, the deck will come to playback mode.
If a cassette is inserted while the supply voltage is switched off, the deck will come to stand-by mode.

Documentation Technique Service Dokumentation Documentazione di Servizio Huolte-Ohje Manual de Servicio Manual de Serviço

Subject to modification

GB 4822 725 14342

Printed in The Netherlands

OPERATION OF TAPE TRANSPORT (Figs 1...4)

In the aforementioned Figures arrows indicate the movements made by the parts to accomplish a definite operation. The shaded parts are those which are continuously turning. The appended tables show the sequence of movements as they should be read in the Figures.
For this, the following system has been adopted:

1→3 : movement of two different parts
1→2 : movement of a part composed of several pieces, which, for improved clarity of the Figure, is drawn at different places (e.g. clutch).
→2a

The initial position is shown in Fig. 1.
Figs 2 and 4 show the situation at the end of the sequence of movements starting from the situation shown in Fig. 1 (cassette inserted; tape transport in PLAY position).
Fig. 3 shows the result obtained after completion of the movements starting from the situation shown in Fig. 2 (tape transport in MSS FAST WIND position).

SPECIFICATION

Tape speed	: 4,76 cm/sec.
Wow and flutter	: ⩽ 0.35% (10-45° C)
Crosstalk	: ⩾ 30 dB (1 kHz)
Output voltage	: ⩾ 300 mV (315 kHz)
Winding time (C60)	: ⩽ 110 sec.

SERVICING HINTS (Figs 5, 6)

To prevent mechanical stresses observe the following sequence while mounting the tape transport in the apparatus.

1. Front
2. Rear

DEMOUNTING TAPE DECK

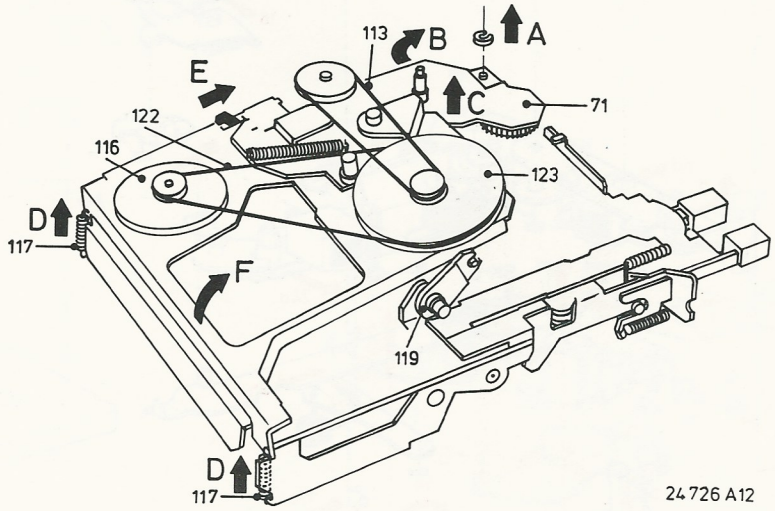

Fig. 5

DEMOUNTING HEAD BRACKET 54

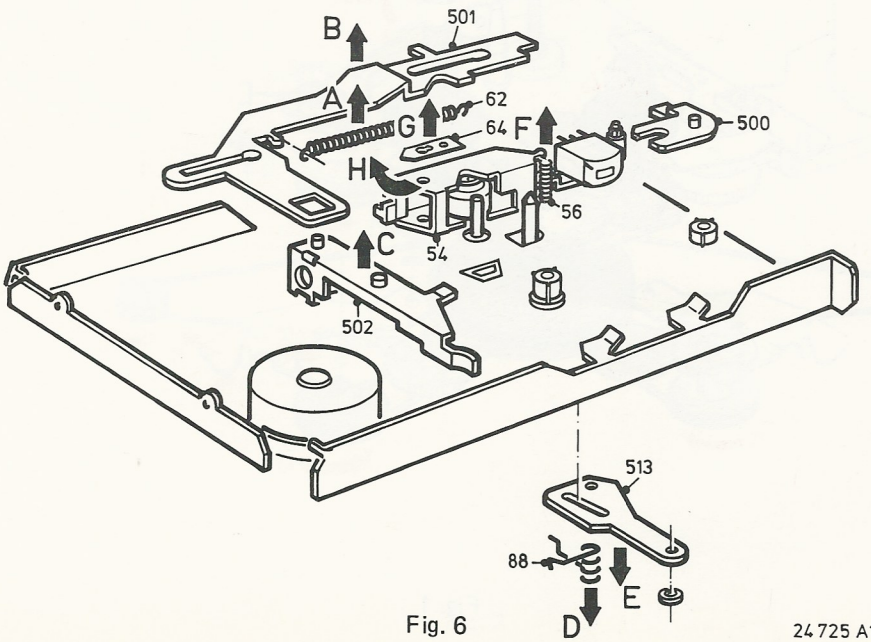

Fig. 6

POSITION PLAYBACK ▷

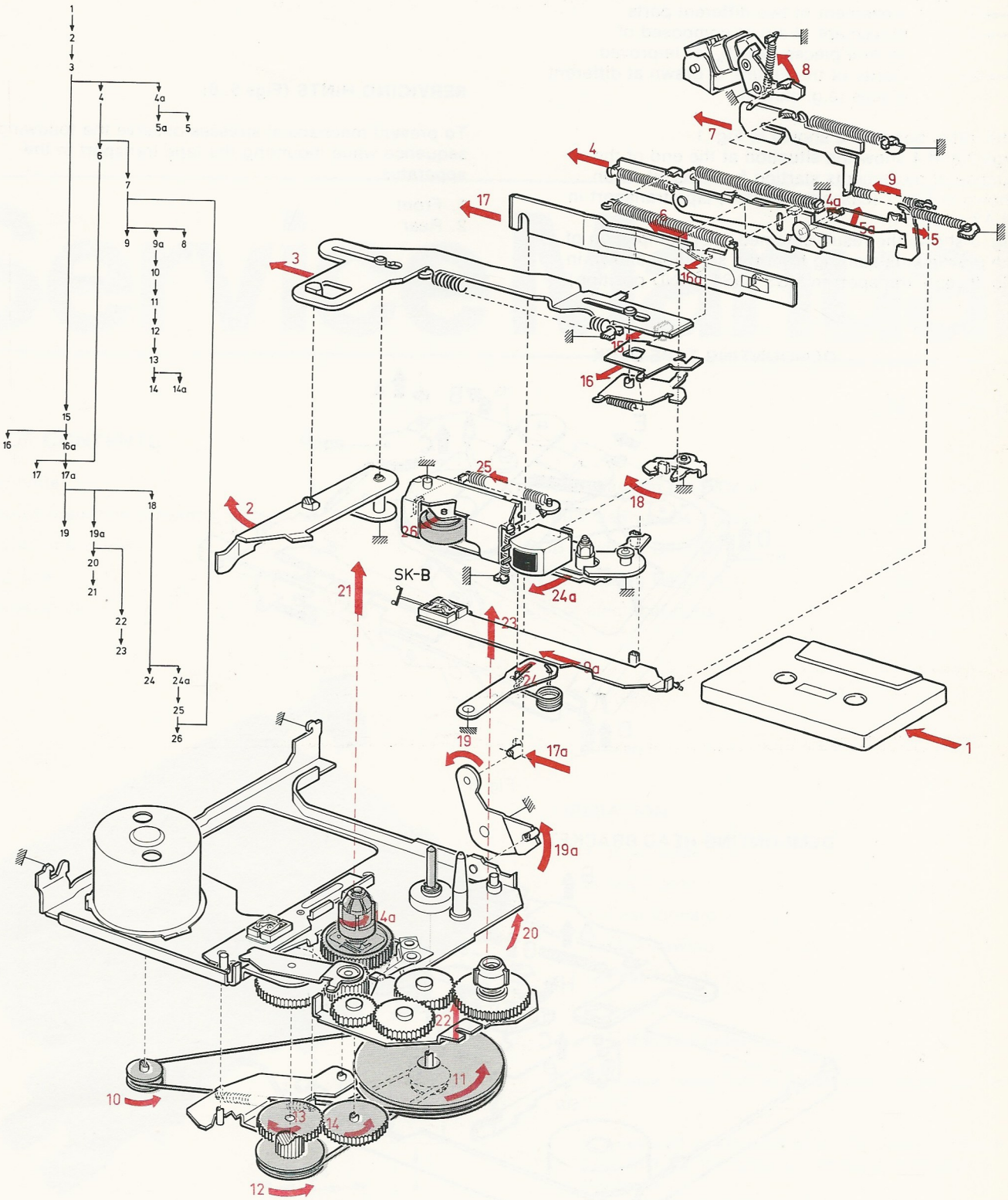

Fig. 1

23786D19

POSITION MSS FORWARD/MSS REWIND

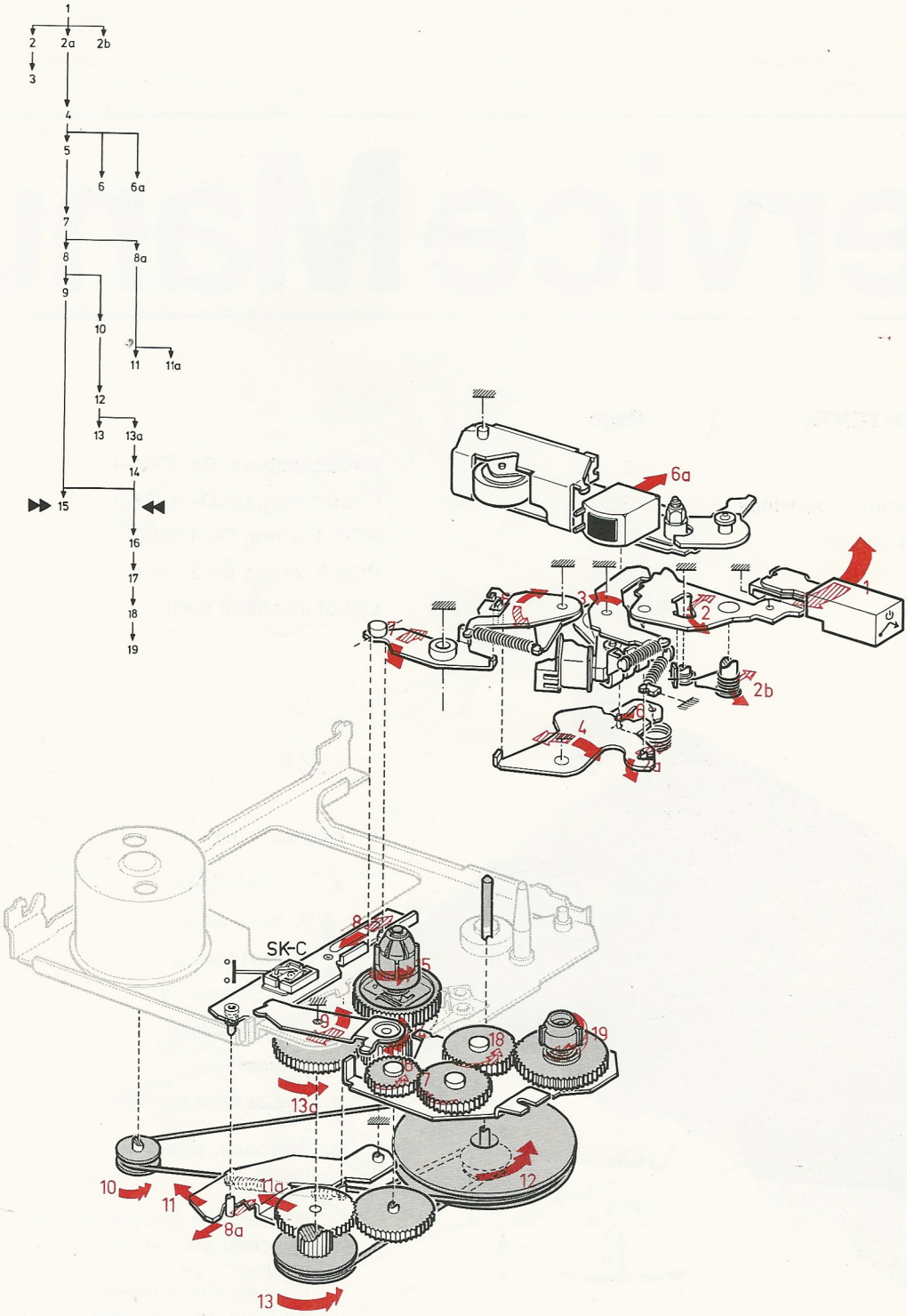

Fig. 2

POSITION MSS OFF

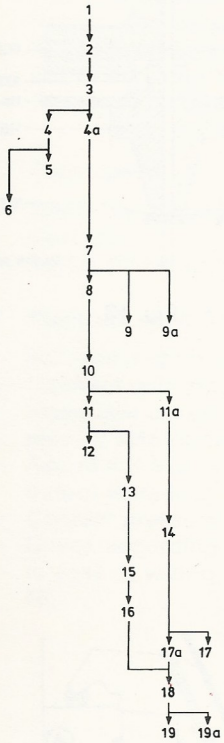

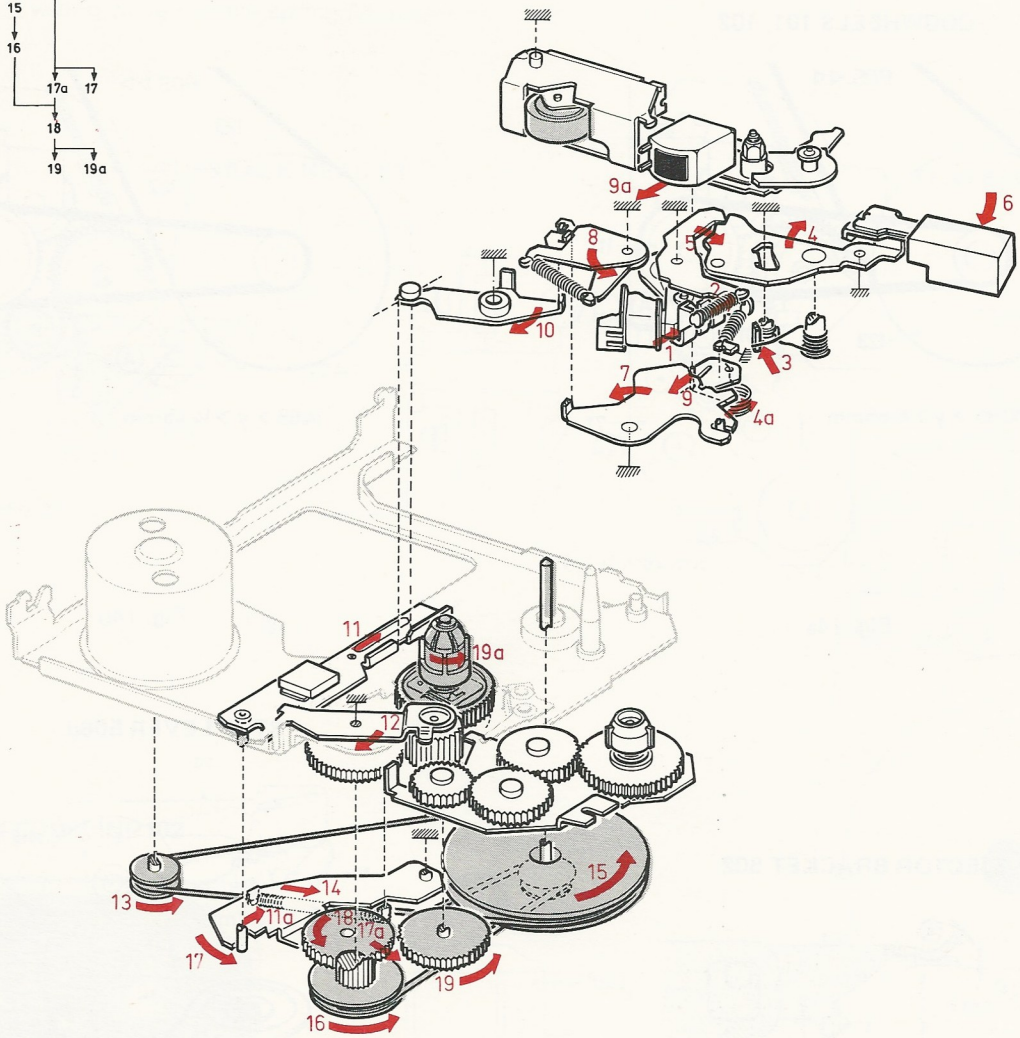

24029D19

Fig. 3

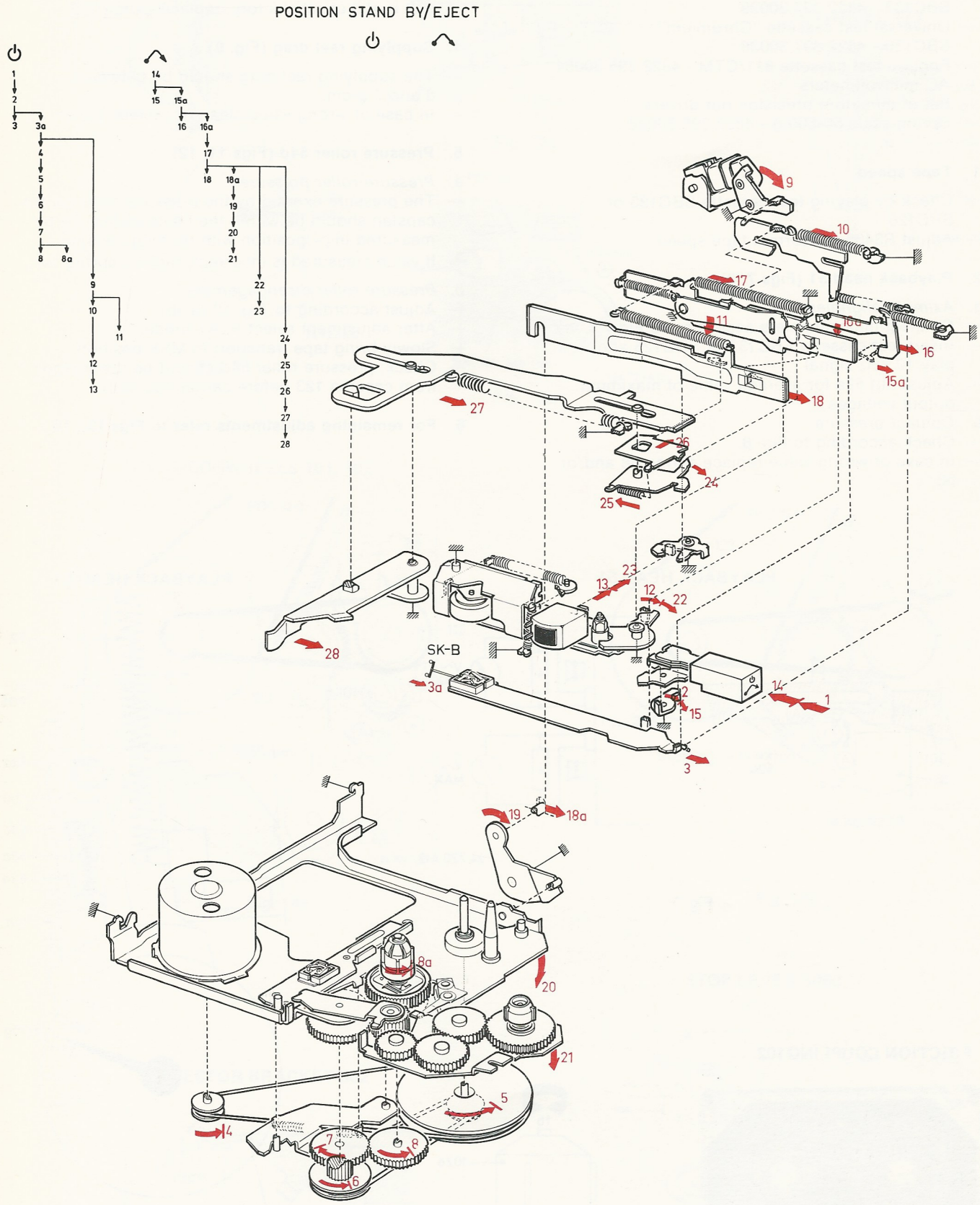

Fig. 4

23788D19

ADJUSTMENTS AND CHECKS

Equipment required:

- Universal test cassette "Ferro" SBC133 - 4822 397 30039
- Universal test cassette "Chromium" SBC126 - 4822 397 30038
  Friction test cassette 811/CTM - 4822 395 30054
- AC millivoltmeters
- Set of miniature precision nut drivers
- Spring scale 50-500 g - 4822 395 80028

1. Tape speed

- Check by playing test cassette SBC133 or SBC126.
- Adjust R3435 for correct tape speed.

2. Playback head 51 (Figs 7, 8)

a. *Azimuth alignment*
- Connect millivoltmeters according to Fig 7.
- Insert test cassette SBC133 or SBC126 and play 10 kHz signal.
- Adjust nut 52a for average value of maximum output voltages.

b. *Contact pressure*
- Check according to Fig. 8.
- In case of wrong value replace spring 88 and/or 56.

3. Friction clutch 102 (Figs 9, 10)

- The play take-up torque should be 40 - 55 g-cm.
- In case of wrong value a first remedy would be to turn carrier 102a relatively to clutch 102. If the result is still unsatisfactory, replace clutch 102.

4. Supplying reel drag (Fig. 9)

- The supplying reel drag should be between 3 and 7 g-cm.
- In case of wrong value clean or replace clutch 71.

5. Pressure roller 54d (Figs 11, 12)

a. *Pressure roller pressure*
- The pressure exerted by the pressure roller on the capstan should be within the limits stated. To be measured in ▷ position with running capstan.
- If value measured is incorrect, replace spring 54c.

b. *Pressure roller disengagement*
- Adjust according to Fig. 12 (a+b)
- After adjustment select PLAY mode.
- Slowly bring tape transport in MSS position.
- Check: pressure roller 54d should be disengaged from capstan 123 before carrier 102 stops.

6. For remaining adjustments refer to Figs 13...16

PLAYBACK HEAD 51

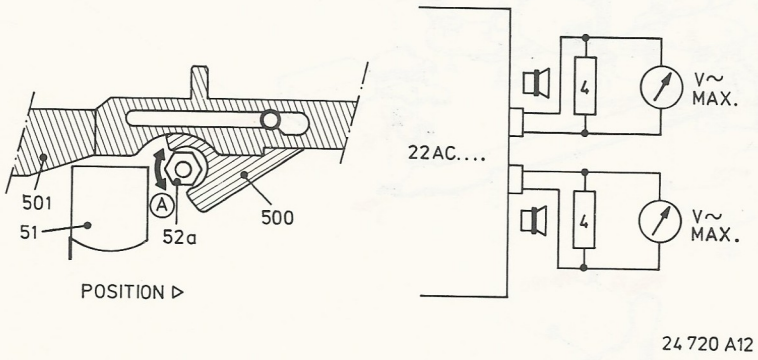

Fig. 7

PLAYBACK HEAD 51

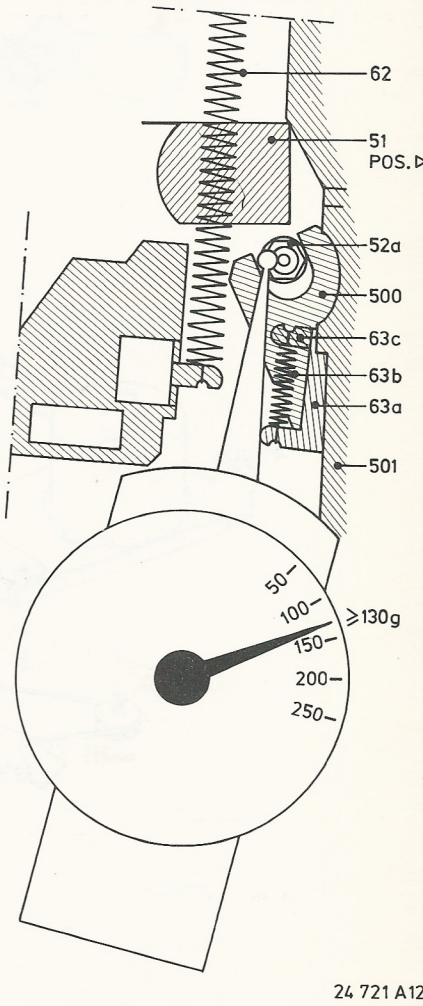

Fig. 8

FRICTION COUPLING102

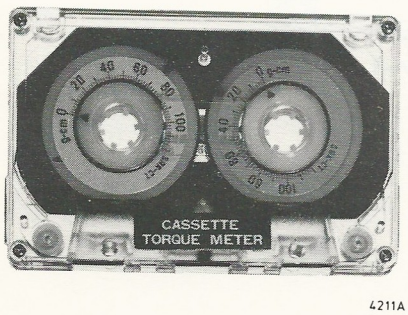

Fig. 9

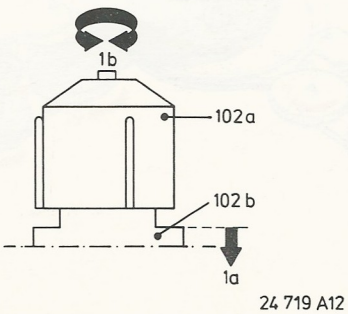

Fig. 10

PRESSURE ROLLER 54

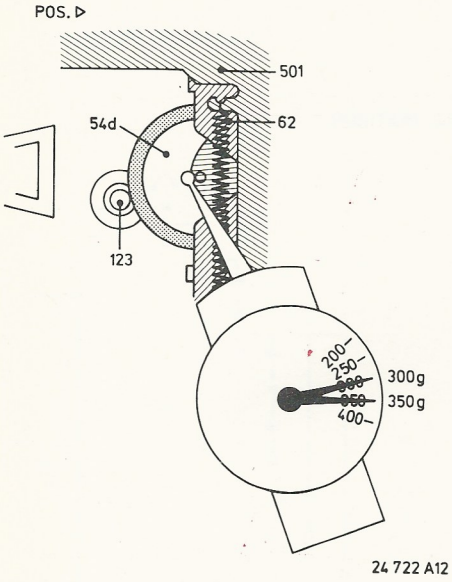

Fig. 11

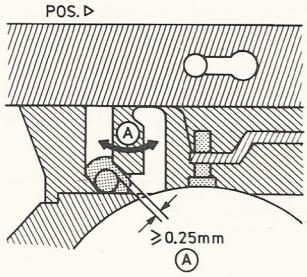

Fig. 12a

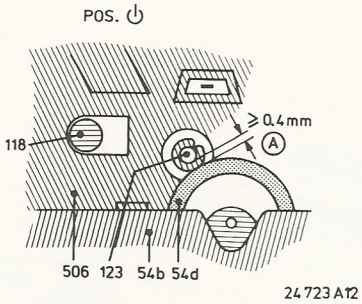

Fig. 12b

FLYWHEEL 123

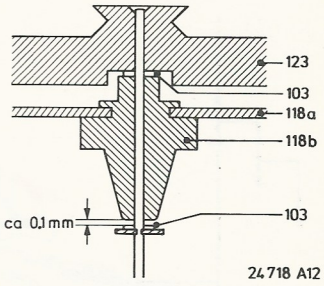

Fig. 13

COGWHEELS 101, 102

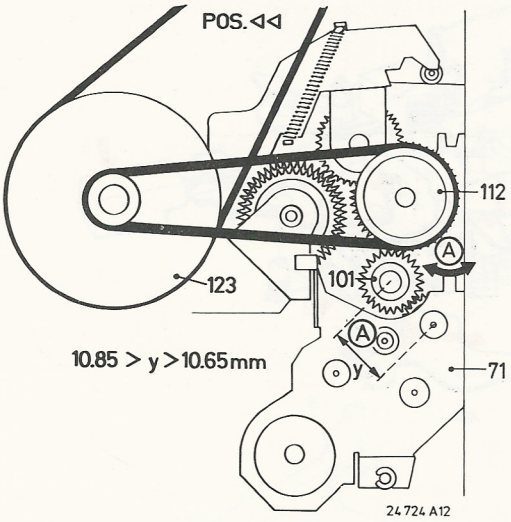

Fig. 14a

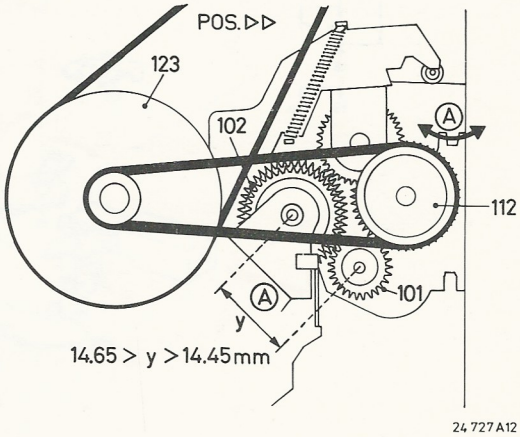

Fig. 14b

EJECTOR BRACKET 502

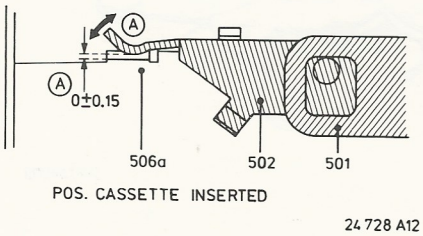

Fig. 15

STOP LEVER 506d

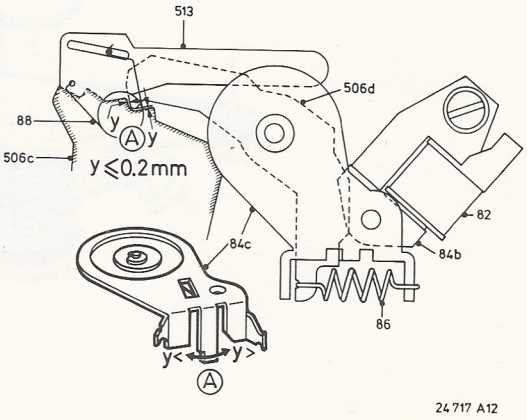

Fig. 16

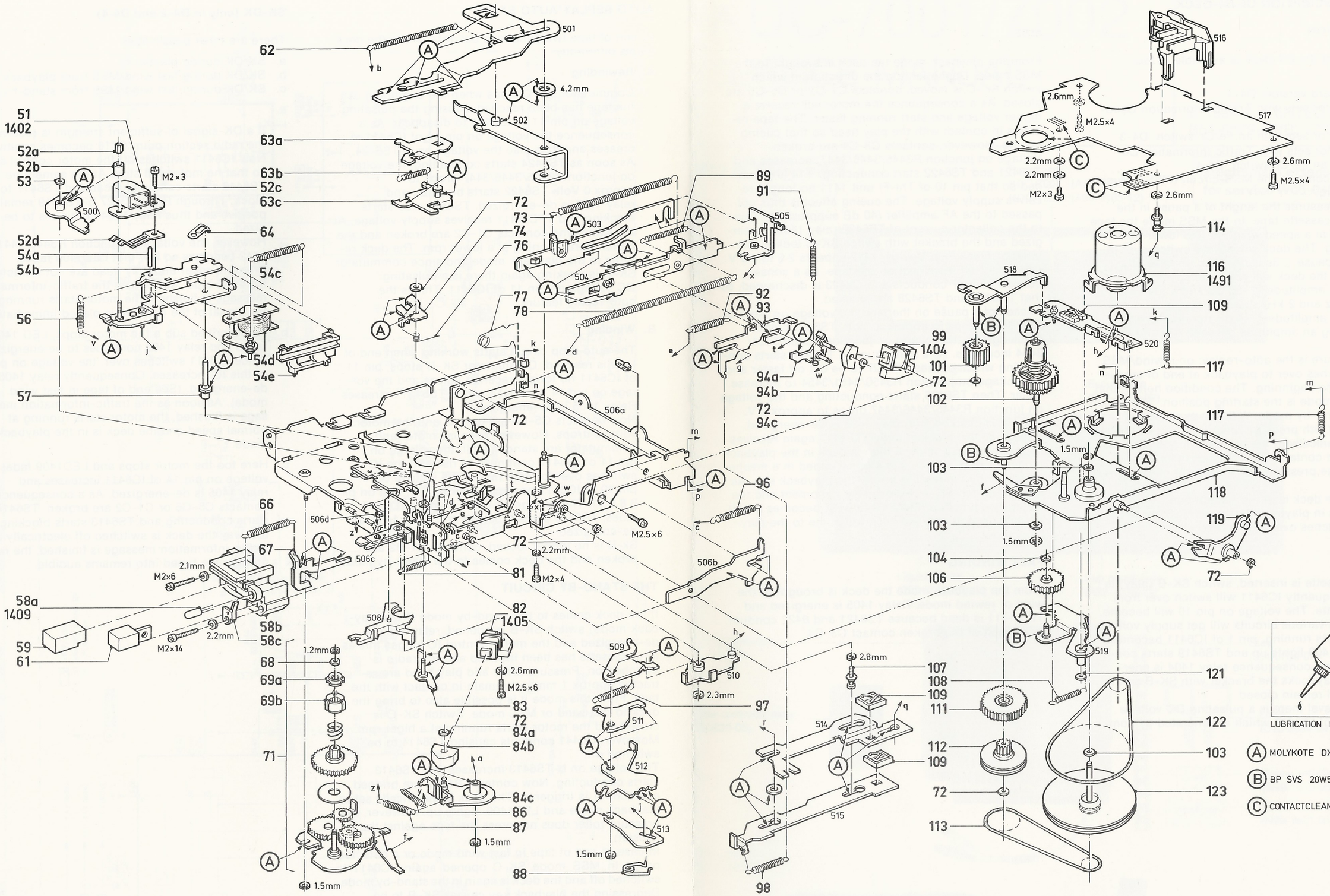

51	See electr. item 1402	63	4822 402 30113	76	4822 492 62349	89	4822 492 31825	101	4822 522 31341	113	4822 358 20135
52	4822 310 10137	64	4822 492 62351	77	4822 492 62347	91	4822 492 31827	102	4822 403 51458	114	4822 502 11488
53	4822 532 50268	66	4822 492 31824	78	4822 492 31818	92	4822 492 31822	103	4822 532 50944	115	4822 402 20077
54	4822 403 51453	67	4822 403 51457	81	4822 492 31812	93	4822 403 51449	104	4822 532 51198	116	See electr. item 1491
56	4822 492 31823	68	4822 532 50945	82	See electr. item 1405	94	4822 403 51454	106	4822 522 31339	117	4822 492 31826
57	4822 500 10254	69	4822 402 20078	83	4822 403 51461	96	4822 492 31817	107	4822 502 11487	118	4822 403 51452
58	4822 466 80755	71	4822 403 51451	84	4822 403 51455	97	4822 492 31814	108	4822 492 31828	119	4822 403 51459
59	4822 410 22521	72	4822 532 51196	86	4822 492 31816	98	4822 492 31813	109	4822 271 30261	121	4822 532 51197
61	4822 410 22519	73	4822 492 31819	87	4822 492 31815	99	See electr. item 1404	111	4822 522 31338	122	4822 358 30261
62	4822 492 31821	74	4822 403 51456	88	4822 492 62348	100	4822 532 51197	112	4822 528 50123	123	4822 528 60148

CIRCUIT DESCRIPTION OF D4-DECK

INTRODUCTION

At the moment the D4-deck is available in four versions:

- The standard version: D4-1
- A version for sets with Traffic Information Decoder: D4-2
- A version for sets with an Fe/Cr-switch: D4-3
- A version for sets with Traffic Information Decoder and an Fe/Cr-switch: D4-4

The D4-deck contains the MSS-circuit (MSS= **M**usic **S**ensor **S**ystem).
This circuit measures the lenght of a pause in the signal on the cassette tape. In the MSS mode the tape is transported at a speed which is 10% lower than that at fast winding. The deck will always switch over to playback if a pause $\geqslant$ 3s is detected. In case of a pause $\leqslant$ 0.5 s the deck will not switch over.
Signal means: amplitude $\geqslant$ -30 dB and a frequency between 50 Hz and 2 kHz during playback.
Pause means: amplitude $\leqslant$ -4 dB during playback.
A signal having an amplitude between -30 and -40 dB is undefined.
A second feature is the auto-replay: on rewind/MSS the deck switches over to playback at end of tape is played from the beginning. The condition here is that the playback mode is the starting position. The deck also has a stand-by mode. With the exception of the head bracket (with pressure roller and play head) the deck is **mechanically** in the playback mode. The cassette tape is in contact with pressure roller and P-head, but the pressure roller does not engage with the capstan.
Electrically the deck is in the radio mode.
At end of tape in playback/fast wind/MSS mode the tape deck switches over to stand-by mode.

PLAYBACK

When the cassette is inserted, switch SK-B (play) is closed. Consequently IC6411 will switch over from radio to cassette. The voltage on pin 10 will become, 8.5 V and thus various circuits will get supply voltage. The motor starts running, pin 1 of IC6411 becomes positive, LED1409 lights up and TS6419 starts conducting and as a consequence relay 1404 is energized. This relay locks the bracket with SK-B so that this switch will remain closed.
During tape travel there is a pulsating DC voltage across pin 11 of IC6411 which is generated by commutator SK-D.

MSS

From the playback mode the deck is brought to the MSS mode. Dependent on the direction in which switch SK-C is moved, contacts C1-C2 or C5-C6 are closed. As a consequence the motor will receive a higher voltage and start running faster. The tape remains in contact with the play head so that cueing occurs. However, contacts C3-C4 are broken.
Voltage on junction R3445/3446/3447 increases and TS6421 and TS6422 start conducting. +14 is grounded so that pin 10 of Thi-Fi unit 1411 no longer receives supply voltage. The cueing effect is thus not passed to the AF amplifier (40 dB suppressed). Due to the collector current of TS6422 relay 1405 is energized and the bracket with switch SK-C locked. On pin 9 of Thick Film Device 1412 appears 2.5 to 3.5 V dependent on the signal on the tape. As a consequence TS6427 conducts and C2423 is discharged, so that TS6425 and TS6428 are blocked.
In case of a pause on the tape the voltage on pin 9 of TFD 1412 drops to approx. 0 Volt. TS6427 starts blocking and the voltage on junction R3450/3451/3454 increases. As a consequence TS6428 starts conducting which causes TS6427 to be cut off faster and the voltage on junction R3450/3451/3454 to increase faster. Then TS6425 starts conducting and the voltage on junction R3445/3446/3447 drops to approx 0 V. TS6422 is blocked and relay 1405 is de-energized. TS6421 is also blocked and TFD 1411 again receives supply voltage. The deck then is back in the playback mode. The MSS mode can also be ended in a mechanical way by depressing briefly the playback key. As a result switch SK-A is closed for a moment and the voltage on junction R3445/3446/3447 becomes 0 Volt. As described above, the deck will come to the playback mode.

FAST WINDING

From the playback mode the deck is brought to the wind or rewind mode. Relay 1405 is energized and TFD 1411 is dead because TS6421 and 6422 conduct as a result of the broken contact C3-C4.

AUTO REPLAY/AUTO STOP

At end of tape two situations occur to which the deck reacts differently.

A. Rewinding

Commutator SK-D stops when the beginning of the tape has been reached, causing the pulsating voltage on pin 11 of IC6411 to disappear. As a consequence the voltage on pin 14 of IC6411 in creases and thus also the voltage on b-TS6424. As soon as TS6424 starts conducting, the voltage on junction R3445/3446/3447 drops to approx.0 Volt. TS6422 starts blocking and relay 1405 is de-energized; TS6421 also starts blocking and TFD 1411 receives supply voltage. At the same time contacts C1-C2 are broken and the motor starts running at a lower rpm. The deck returns to the playback mode and since commutator SK-D is working again there is a pulsating DC voltage on pin 11 of IC6411. This is the auto-replay feature.

B. Winding

The auto-stop circuit starts working when end of tape is reached. Commutator SK-D stops, pin 11 of IC6411 no longer receives pulses and the voltage on pin 14 of IC6411 and b-TS6421 increases. Relay 1405 is de-energized.
Now contacts C5-C6 are broken and the motor voltage drops. However, because motor and commutator are standing still, the voltage on pin 14 of IC6411 continues to rise and the IC switches over to radio mode (the voltage on pin 10 of IC6411 becomes approx. 0 V, that on pin 8 8.5 V). The voltage on pin 1 drops, LED1409 fades, TS6419 starts blocking and relay 1404 is de-energized.
Sk-B is no longer locked, contacts B1-B2 are broken and the deck comes to the stand-by mode.

THE STAND-BY CIRCUIT

If the deck comes to the stand-by mode (from playback mode) switch SK-B is opened, relay 1404 is de-energized and the motor control IC judges this as if no cassette has been inserted and the radio is switched on. Pressure roller and play head are retracted approx 1 mm but remain in contact with the tape. From this mode it is possible also to bring the deck to fast wind or MSS mode. Switch SK-C is closed and the motor starts running at a higer rpm. Moreover, D6441 conducts causing TS6414 to be switched off.
The voltage on b-TS6413 increases and TS6413 starts conducting. Now contacts B1-B2 are bridged and IC6411 is triggered. The deck is **electrically** set to playback mode and LED1409 lights up. However, the pressure roller does not press the tape against the capstan.
In case of end of tape in fast wind mode or a detected pause in MSS mode SK-C opened again, IC6411 is switched off and the deck is again in the stand-by mode. Depressing the playback key causes SK-B to be closed.
Now, as described above, the deck is set to the playback mode.

SK-DK (only in D4-2 and D4-4)

There are three possibilities

a. SK/DK during playback
b. SK/DK during fast wind/MSS from playback
c. SK/DK during fast wind/MSS from stand-by

a.

If a DK-signal of sufficient strength is received in the radio section point C416 becomes positive. Now IC6411 switches off the motor control circuit so that he motor will stop. At the same time TS6416 starts conducting causing TS6417 to block. Through R3426, 3427 b-TS6419 remains positive and thus relay 1404 continues to be energized.
However, the voltage on junction R3440/3441/3442 becomes so low that LED1409 fades. Pressure roller and play head are not retracted from the tape. As soon as the traffic-information message is finished, the motor starts running and the signal of the cassette is played immediately.

b. As described sub a the motor stops, LED 1409 fades and relay 1404 continues to be energized. Since IC6411 switches over, the voltage on pin 14 of this IC increases. Consequently relay 1405 is de-energized. (See end of tape in fast wind mode). As soon as the traffic-information message is finished, the motor starts running at normal speed and the deck is in the playback mode.

c. Here too the motor stops and LED1409 fades. The voltage on pin 14 of IC6411 increases and relay 1405 is de-energized. As a consequence contacts C5-C6 or C1-C2 are broken. TS6414 starts conducting and TS6413 starts blocking. In this way the deck is switched off electrically. If the traffic-information message is finished, the radio programme tuned into remains audible.

MISC.	SK-D 6411 SK-B 6413. .6414 6441 6443 6416.6417.1491 1409 6419.6445.6421.6424.SK-A.1404.1402.6422.6446.6425 6448.1405 6427.6428 6432.6433 1411 6435.6450 1412
C	2414 2415.2411.2412 2418.2419 2420 2423 2426.2427 2424 2428.2429 2435 2432.2433
R	3413 3415÷3417.3411.3412 3419÷3421 3429÷3431 3422 3433÷3437 3424÷3427 3440÷3442 3449 3445÷3447 3450 3454 3451.3452.3453.3456÷3459 3462

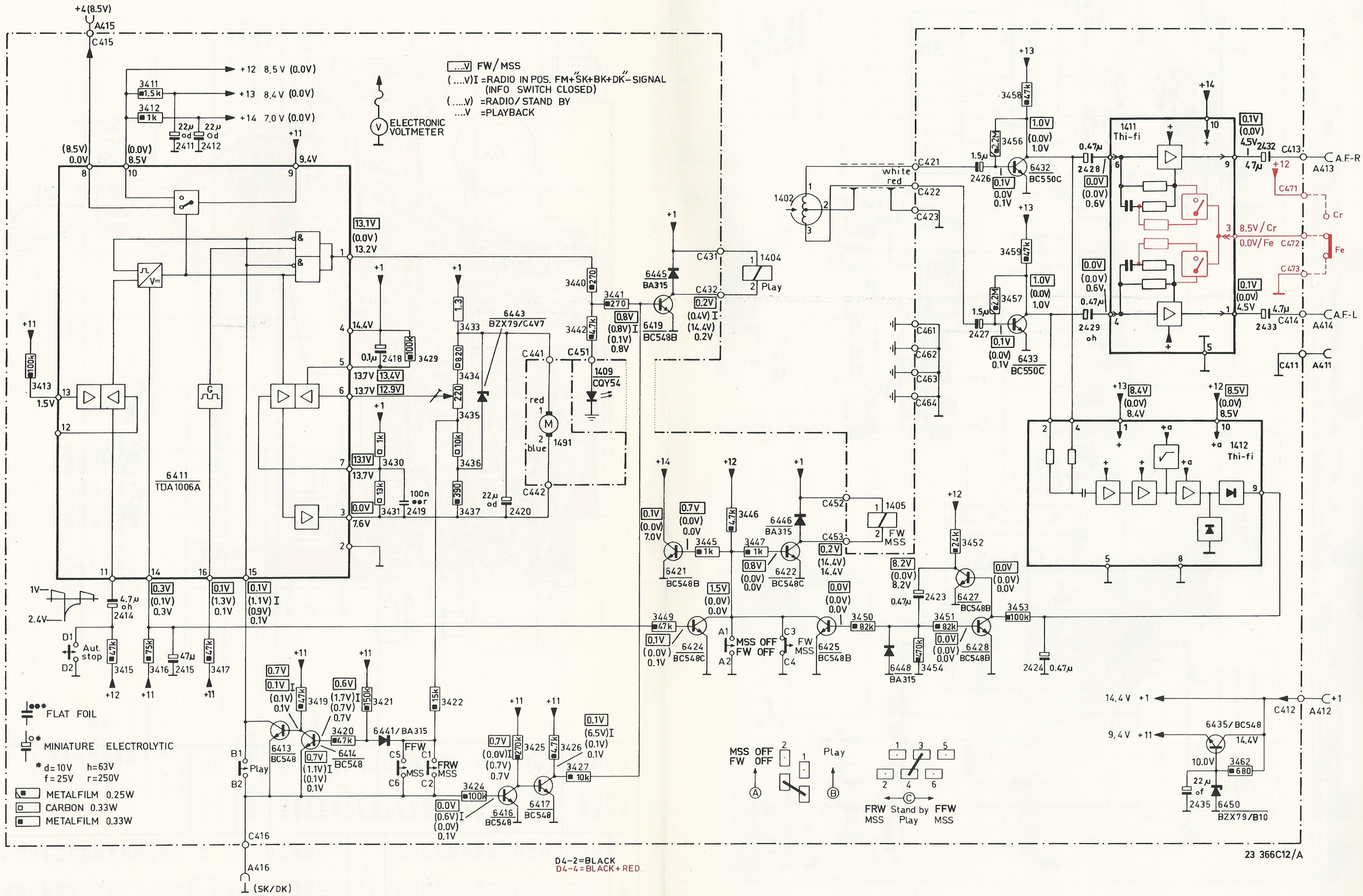

MISC.	SK-D	6411	SK-B	6441	6443	1491	1409	6419.6445.6421.6424.SK-A.1404.1402.6422.6446.6425	6448.1405	6427.6428	6432.6433	1411	6435.6450	1412
C	2414	2415.2411.2412	2418.2419	2420					2423	2426.2427	2424	2428.2429	2435	2432.2433
R	3413	3415÷3417.3411.3412	3429÷3431	3422	3433÷3437	3440÷3442	3449	3445÷3447	3450	3454	3451.3452.3453.3456÷3459			3462

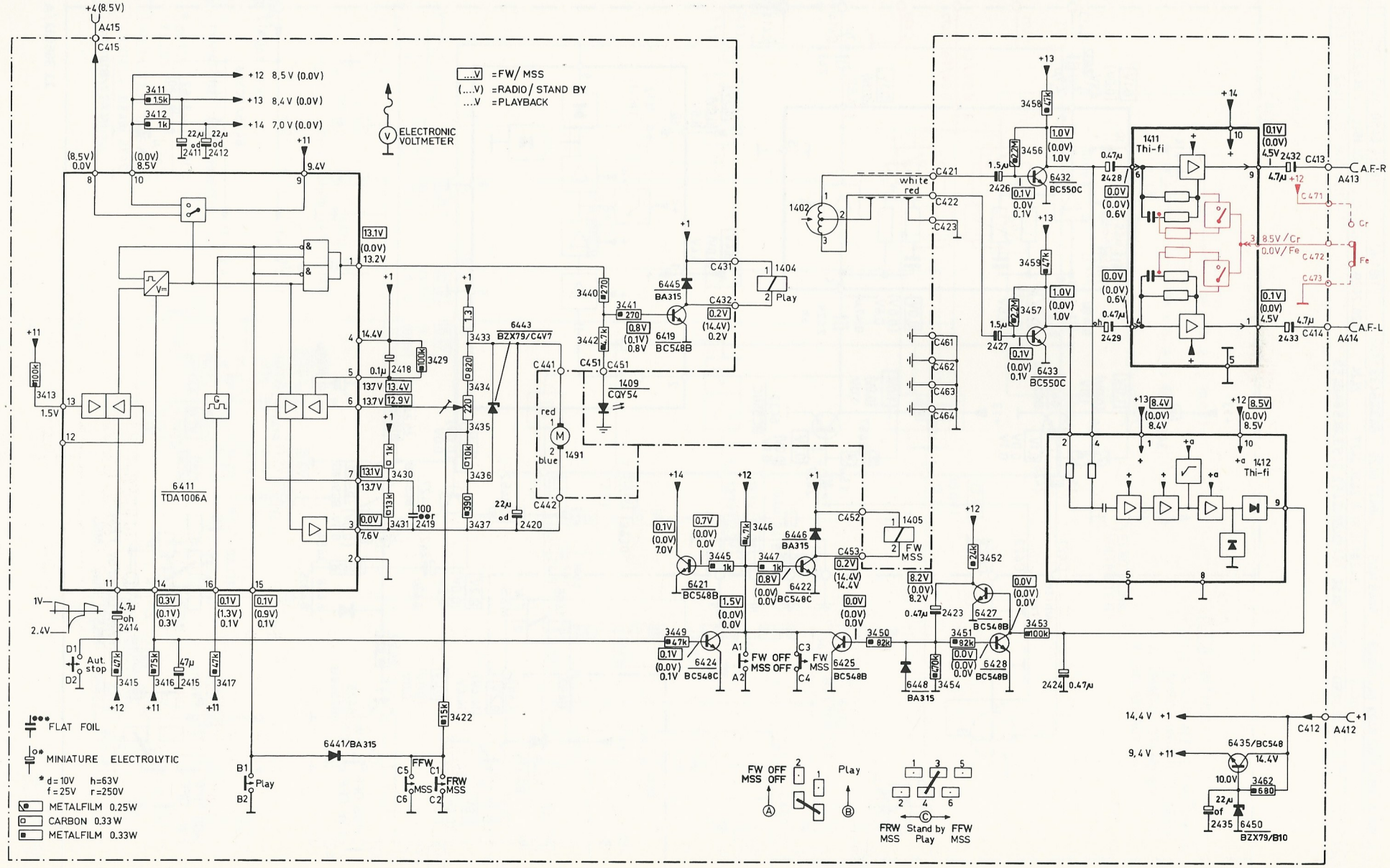

2411	D2
2412	D1
2414	E3
2415	D1
2418	F2
2419	F3
2420	G2
2423	C3
2424	D3
2426	B3
2427	B3
2428	B2
2429	B2
2432	C1
2433	C1
2435	F3

3411	D2
3412	D1
3413	E2
3415	E4
3416	E1
3417	E2
3422	G3
3429	F2
3430	F3
3431 ... 3434	F2
3435	G1
3436	G2
3437	F1
3440	G3
3441	G4
3442	F4
3445	E2
3446	E3
3447	D3
3449	D1
3450	B4
3451	C3
3452	C3
3453	D3
3454	C4
3456	B3
3457	B2
3458	C3
3459	C2
3462	F3

etc.

6419	G3
6421	D2
6422	D3
6424	D2
6425	B4
6427	D2
6428	C3
6432	C2
6433	B2
6435	F3
6441	J4
6443	F2
6445	B4
6446	D3
6448	C4
6450	G3

THI-FI

1411	C2
1412	C2

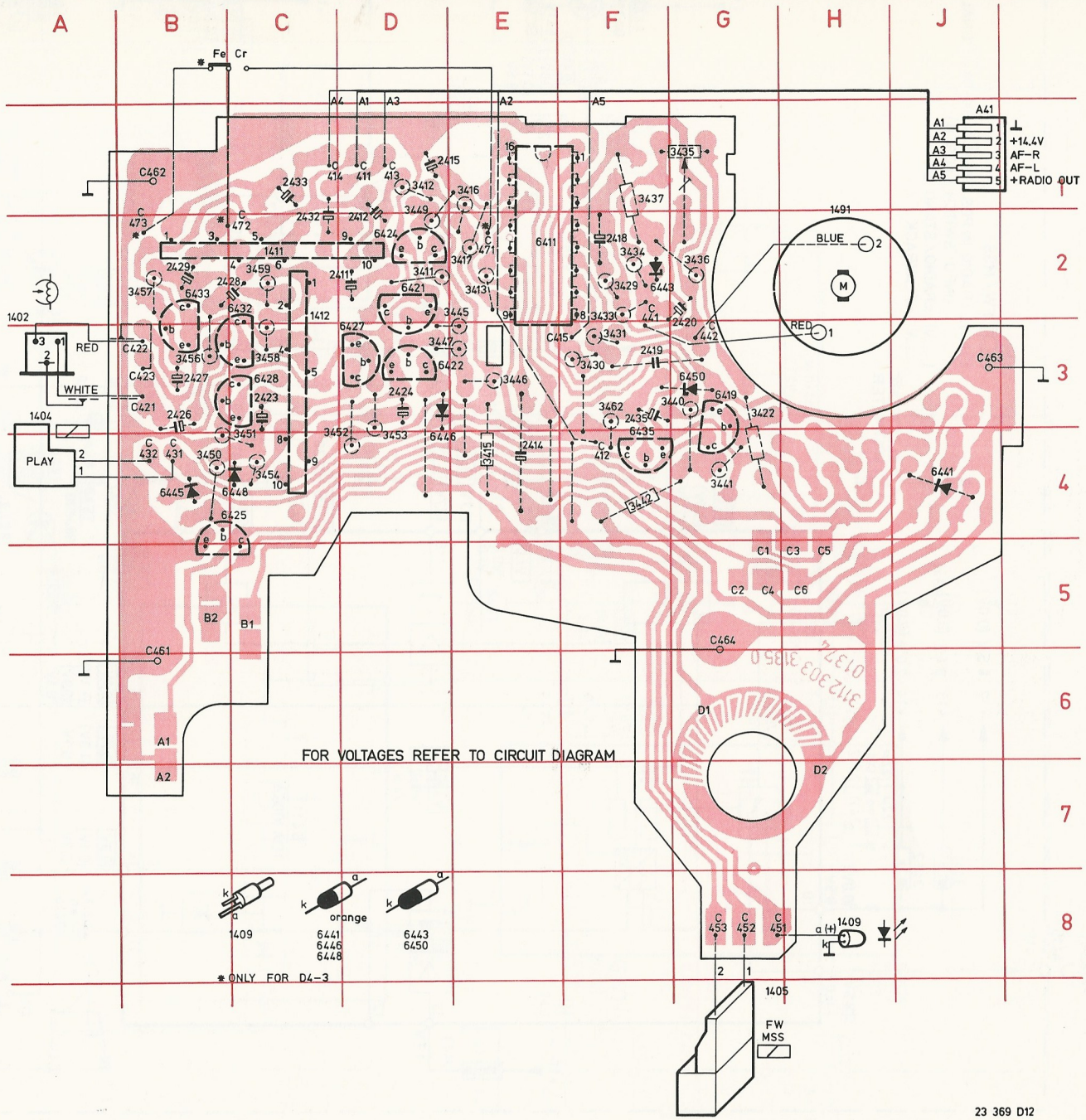

MISC.	SK-D	6411	SK-B	6413.	.6414	6441	6443	6416.6417.1491	1409	6419.6445.6421.6424.SK-A.1404.1402.6422.6446.6425	6448.1405	6427.6428	6432.6433	1411	6435.6450	1412
C	2414	2415.2411.2412				2418.2419	2420				2423	2426.2427	2424	2428.2429	2435	2432.2433
R	3413	3415÷3417.3411.3412			3419 ÷ 3421	3429÷3431	3422	3433÷3437	3424÷3427	3440÷3442	3449	3445 ÷ 3447	3450	3454	3451.3452.3453.3456÷3459	3462

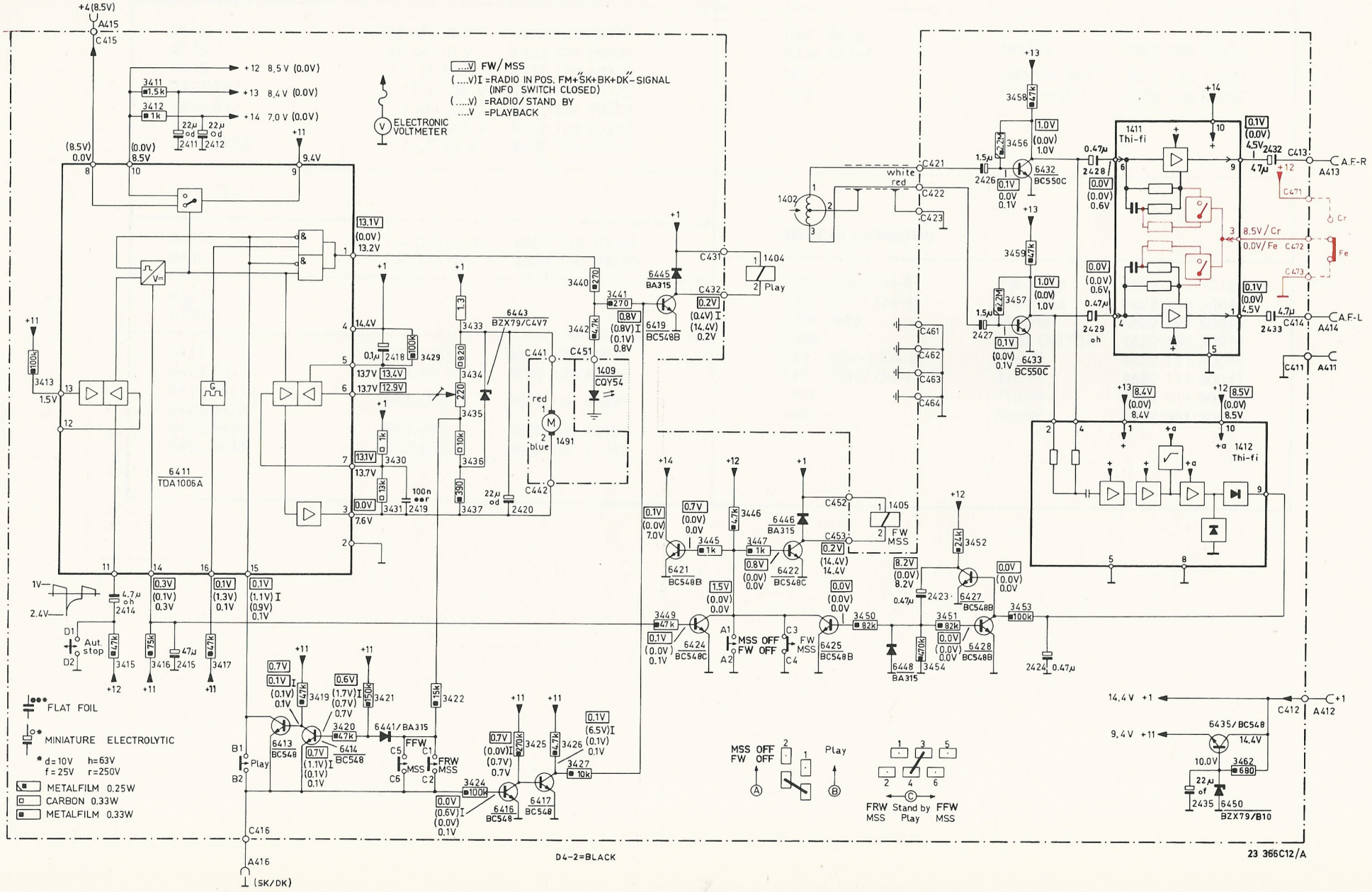

2411	D2
2412	D1
2414	E3
2415	D1
2418	F2
2419	F3
2420	G2
2423	C3
2424	D3
2426	B3
2427	B3
2428	B2
2429	B2
2432	C1
2433	C1
2435	F3

3411	D2
3412	D1
3413	E2
3415	E4
3416	E1
3417	E2
3419	J4
3420	J3
3421	J3
3422	G4
3424 ... 3426	H4
3427	G3
3429	F2
3430	F3
3431 ... 3434	F2
3435	G1
3436	G2
3437	F1
3440	G3
3441	G4
3442	F4
3445	E2
3446	E3
3447	D3
3449	D1
3450	B4
3451	C3
3452	C3
3453	D3
3454	C4
3456	B3
3457	B2
3458	C3
3459	C2
3462	F3

etc.

6411	E2
6413	J4
6414	J3
6416	H3
6417	H3
6419	G3
6421	D2
6422	D3
6424	D2
6425	B4
6427	D2
6428	C3
6432	C2
6433	B2
6435	F3
6441	J4
6443	F2
6445	B4
6446	D3
6448	C4
6450	G3

THI-FI

1411	C2
1412	C2

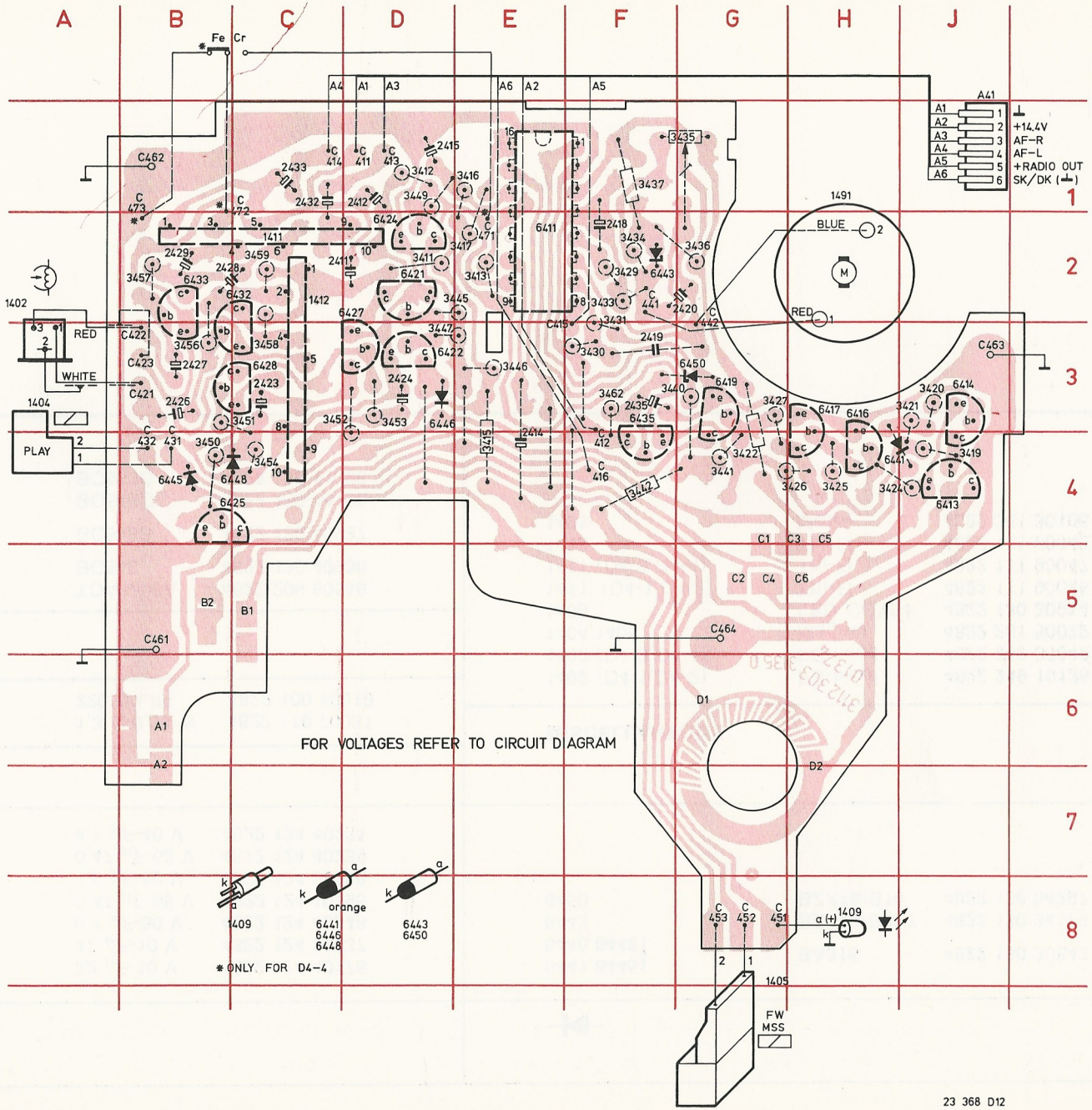

2412	22 μF-10 V	4822 124 40176
2415	47 μF-10 V	4822 124 20637
2418	0,1 μF-50 V	4822 124 40348
2423,2424	0,47 μF-35 V	4822 124 10195
2426,2427	1,5 μF-50 V	4822 124 20828
2428	0,47 μF-63 V	4822 124 40239
2432,2433	4,7 μF-40 V	4822 124 40221

3433	1,3 Ω-0,33 W	4822 110 70031
3435	220 Ω LIN	4822 100 10019

6411	TDA1006A	4822 209 80516
6413-6417	BC548	4822 130 40938
6419,6421 6425,6428	BC548B	4822 130 40937
6422,6424	BC548C	4822 130 44196
6432,6433	BC550C	4822 130 41096

6441,6445 6446,6448	BA315	4822 130 30843
6443	BZX79/B4V7	4822 130 34174
6450	BZX79/B10	4822 130 34297

MISCELLANEOUS

1402 (D4-1,D4-2)	PB-head	4822 249 10125
1402 (D4-3,D4-4)	PB-head	4822 249 30049
1404,1405	Magnet	4822 281 50072
1409	LED CQY54	4822 130 30914
1411, (D4-1,D4-2)	Thi-Fi	4822 111 90045
1411 (D4-3,D4-4)	Thi-Fi	4822 111 90047
1412	Thi-Fi	4822 111 90046
1491	Motor	4822 361 30106

Service
Service
Service Information

1981-12-15

Auto Cassette Deck D4

A81-366

Corrections to the Service documentation

- In the circuit and wiring diagrams the colour indications at the 2 wires of playback head 1402 have been interchanged.
- In wiring diagram D4-1/D4-3 the jumper between the conductors running underneath 6441 (coordinates A-4) is lacking.

Changes introduced in the course of production

- At production start a ring has been added between playback head 51/1402 and flat spring 52d. For Service this ring has been added to item number 52 (4822 310 10137) and the stock has been adapted.
- As from week 125 playback button, item number 61, has been deleted. It has been added to the relevant sets.
  Reason: The button is applied during assembly of the complete set.
- As from week 126 the value of 3433 has been changed to 1.3 Ω.
  As provisional solution a 10-Ω resistor (■) //3433= 1.5 Ω has been mounted. The Service Manual already gives the definite solution.
  Reason: Improving the stability of the motor control.
- As from week 135 2415 has been changed to 47 μF - 6.3 V tantalum 4822 124 10197.
  Reason: Improved functioning of the end of tape circuitry (tantalum version has less leakage current).
  2426 and 2427 have also been changed to tantalum versions, code number 5322 124 14029.
  Reason: Microphony rejection.
- As from week 138 the conductor in the region of SK-B has been changed. In the versions D4-2/D4-4 contacts B3 (to earth) and B4 (to junction 3427/3441/b.6419) have been added.
  Reason: Improved functioning of the eject function during an traffic information ("Verkehrsfunk").
- As from week 140 a different pressure roller has been applied. The stock of Concern Service has been adapted.
  Reason: Improving tape travelling.
- As from week 143 the material of the brackets item number 63 has been changed. The stock of Concern Service has been adapted.
  Reason: Simplification of the production (greasing superfluous).
- As from week 145 a lug of bracket 74 has been bent upwards.
  Reason: Improving locking of head bracket 54.
- As from week 146 the locking lug of bracket 93 and anchor lever 94a has been changed.
  Moreover, lever 94a is treated with molykote 3484.
  Reason: Improving the releasing function.

  Remark: The stock of Concern Service has been adapted. When one of the components is replaced, the other should also be replaced.
- As from week 148 BA317 (4822 130 30847) is used for 6441, 6445, 6446 and 6448.
  Reason: Correct application of BA317.

Printed in the Netherlands

CS 79 326

2411	D2
2412	D1
2414	E3
2415	D1
2418	F2
2419	F3
2420	G2
2423	C3
2424	D3
2426	B3
2427	B3
2428	B2
2429	B2
2432	C1
2433	C1
2435	F3

3411	D2
3412	D1
3413	E2
3415	E4
3416	E1
3417	E2
3419	J4
3420	J3
3421	J3
3422	G4
3424 ... 3426	H4
3427	G3
3429	F2
3430	F3
3431 ... 3434	F2
3435	G1
3436	G2
3437	F1
3440	G3
3441	G4
3442	F4
3445	E2
3446	E3
3447	D3
3449	D1
3450	B4
3451	C3
3452	C3
3453	D3
3454	C4
3456	B3
3457	B2
3458	C3
3459	C2
3462	F3

etc.

6411	E2
6413	J4
6414	J3
6416	H3
6417	H3
6419	G3
6421	D2
6422	D3
6424	D2
6425	B4
6427	D2
6428	C3
6432	C2
6433	B2
6435	F3
6441	J4
6443	F2
6445	B4
6446	D3
6448	C4
6450	G3

MISC.

1402	A2
1404	A3
1405	G8
1409	H8
1411	C2
1412	C2
1491	H1

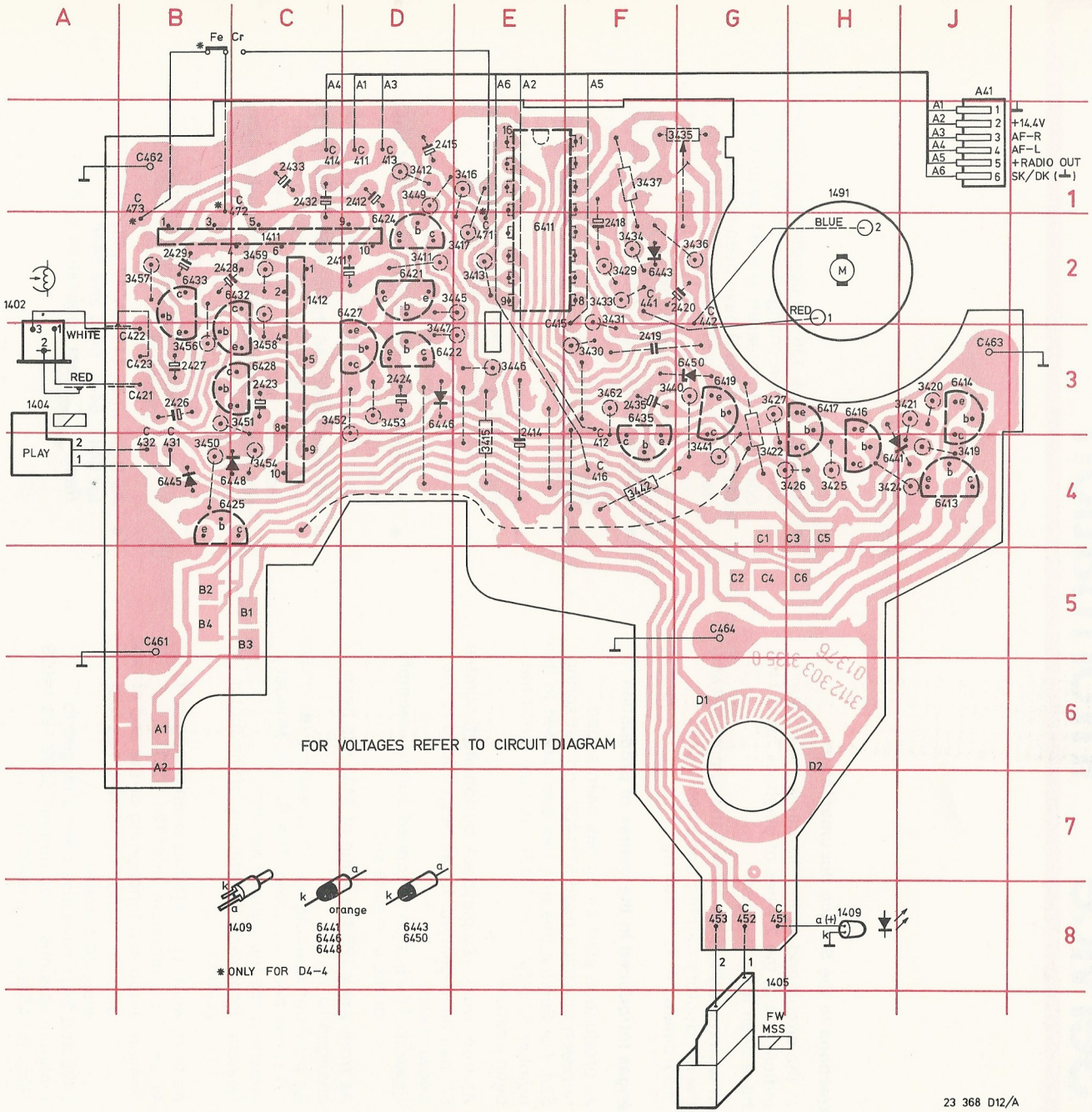

1982-03-10

Auto cassette deck D4

A82-309

It may occur that gold scrapings cause shorts at switch SK-D (autostop).

The service remedy for this is as follows:
Clean the printed switch contacts with degreaser cleaner (spray 389 DS - 4822 389 50094).
Use of contact oil is prohibited.

As from week 139 measures have been taken in production to prevent the above-mentioned problem.

Printed in the Netherlands

Previously published: A81-366

Changes introduced in the course of production

- In week 146 the commutator spring of item 102 has been changed.
  Reason: To prevent gold scrapings from SK-D.
  Furthermore, spring 78 was replaced by 4822 492 31819 (= item 73).
  Reason: To improve the eject function at low ambient temperatures.
- In week 150 a few dimensions of pushbutton casing 58b have been changed.
  Reason: To prevent the pushbuttons from mechanically interfering.
  Furthermore, LED 58a (1409) was replaced by type CQY85NA.
  Reason: Improved visibility of LED in scale cap opening.
- In week 207 eject pushbutton 59 has been deleted. Also refer to A81-366.
  Reason: Pushbutton will be installed during final assembly of the radio-cassette combination.
- In week 209 the springs 86 and 97 were changed.
  Reason: Improved locking in MSS mode and fast wind mode; improved operation of PLAY gear 106.
- In week 210 spring 96 was changed.
  Reason: To prevent binding of switch 109.
- In week 213 cleaning of the circuit board in the region of SK-A...D has been changed.
  Reason: To prevent the occurrence of gold scrapings.
- In week 215 screw M2x3 (to attach circuit board to chassis 506a) was changed to M2.5x3 and the associated washers to 2.6 mm.
  Reason: Quality improvement.
- In week 218 the lugs on bracket 505 (intended to hold the springs 73 and 78) did undergo a change.
  Reason: To prevent the springs from slipping off the lugs.
- In week 222 the pushbutton casing 58a has been changed.
  Reason: To prevent the ornamental plate of certain sets from touching the pushbutton casing.

General

If required, the stock of aforementioned parts has been adapted.

Printed in the Netherlands

Auto cassette deck D4

Service
Service
Service

Versions D4-5
D4-6
D4-7
D4-8
D4-9
D4-10

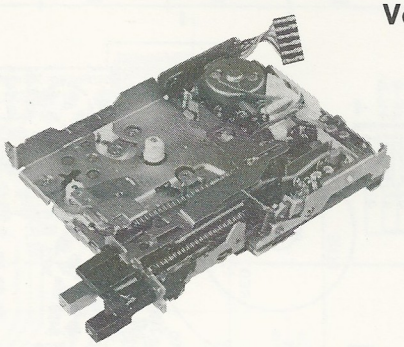

Service Manual

12V

GB As regards operation of tape transport, adjustments and checks, exploded view with list of mechanical parts, circuit description refer to Service Manual D4-1....4.

NL Voor werking van het loopwerk, instellingen en kontroles, exploded view met mechanische onderdelenlijst, schemabeschrijving zie Service Dokumentatie D4-1...4.

F Pour le fonctionnement de la mécanique, les réglages et contrôles, la vue éclatée avec liste des pièces mécaniques, la description du schéma se reférer à la Documentation Technique D4-1...4.

D Funktionsweise des Laufwerks, Einstellungen und Kontrollen, Explosionsansicht mit mechanischer Einzelteilliste, Schaltungsbeschreibung, siehe Service-Dokumentation D4-1...4.

I Per quanto del funzionamento del riproduttore, regolazione e controlli, vista esplosa con elenco parti meccaniche, descrizione circuitale riferirsi alla Documentazione di Servizio D4-1...4.

Documentation Technique Service Dokumentation Documentazione di Servizio Huolte-Ohje Manual de Servicio Manual de Serviço

Subject to modification
4822 725 14895
Printed in The Netherlands

2401	33 µF 50% 16 V	4822 124 40272
2404	1 µF 50% 63 V	4822 124 40242
2406	0.1 µF 50 V	4822 124 40348
2407	220 nF 20% 50 V	4822 124 21124
2408	470 nF 50% 63 V	4822 124 40239
2409	10.000 pF 10% 63 V	4822 122 31728
2414	10.000 pF 10% 63 V	4822 122 31728
2415	470 pF 5% 63 V	4822 122 31727
2416	1.5 µF 20% 35 V	5322 124 14078
2417	470 nF 50% 63 V	4822 124 40239
2418	4.7 µF 50% 63 V	4822 124 40246
2419	1.5 µF 20% 35 V	5322 124 14078
2420	470 nF 50% 63 V	4822 124 40239
2421	4.7 µF 50% 63 V	4822 124 40246

3401	1K 5% 0.125 W	5322 111 90092
3402	680E 5% 0.125 W	4822 111 90162
3403	300E 5% 0.125 W	4822 111 90156
3404	1K5 5% 0.125 W	4822 111 90151
3405	2.200E 10%	4822 101 10348
3406	3K3 5% 0.125 W	4822 111 90157
3407	270E 5% 0.125 W	4822 111 90154
3410	8K2 5% 0.125 W	5322 111 90118
3411	100K 5% 0.125 W	4822 111 90148
3415	22K 5% 0.125 W	5322 111 90103
3417	8K2 5% 0.125 W	5322 111 90118
3418	10K 5% 0.125 W	5322 111 90093
3419	150E 5% 0.125 W	5322 111 90098
3420	10K 5% 0.125 W	5322 111 90093
3421	1M 5% 0.125 W	5322 111 90094
3422	82K 5% 0.125 W	5322 111 90119
3423	470K 5% 0.125 W	4822 111 90161
3424	82K 5% 0.125 W	5322 111 90119
3425	24K 5% 0.125 W	4822 111 90153
3426	100K 5% 0.125 W	4822 111 90148
3430	100K 5% 0.125 W	4822 111 90148
3431	8K2 5% 0.125 W	5322 111 90118
3432	680E 5% 0.125 W	4822 111 90162
3433	8K2 5% 0.125 W	5322 111 90118
3434	3M3 5% 0.125 W	4822 111 90158
3435	12K 5% 0.125 W	5322 111 90097
3436	390E 5% 0.125 W	4822 111 90159
3437	120K 5% 0.125 W	4822 111 90149
3440	560E 5% 0.125 W	5322 111 90113
3441	27K 5% 0.125 W	4822 111 90155
3442	47K 5% 0.125 W	5322 111 90112
3443	2M2 5% 0.125 W	4822 111 90152
3444	120K 5% 0.125 W	4822 111 90149
3445	470K 5% 0.125 W	4822 111 90161
3446	47K 5% 0.125 W	5322 111 90112
3447	2M2 5% 0.125 W	4822 111 90152
3448	470K 5% 0.125 W	4822 111 90161
3449	120K 5% 0.125 W	4822 111 90149
3450	470K 5% 0.125 W	4822 111 90161
3451	470K 5% 0.125 W	4822 111 90161
3453	Jumper	4822 111 90163
3454	Jumper	4822 111 90163

BAV18		4822 130 30899
BA315		4822 130 30843
BA317		4822 130 30847
V505P	Red	4822 130 31398

BC548	4822 130 40938
BC548A	4822 130 40948
BC548B	4822 130 40937
BC548C	4822 130 44196
BC550C	4822 130 41096
BC558	4822 130 40941
BC558B	4822 130 44197

TDA1506	4822 209 81177

Miscellaneous

1402	Playback head	4822 249 10125
1404	Relay play	4822 281 50072
1405	Relay FW/MSS	4822 281 50072
1491	Motor	4822 361 30106
7421	Thickfilm unit 1-PA-6 pre-amp.	4822 111 90044

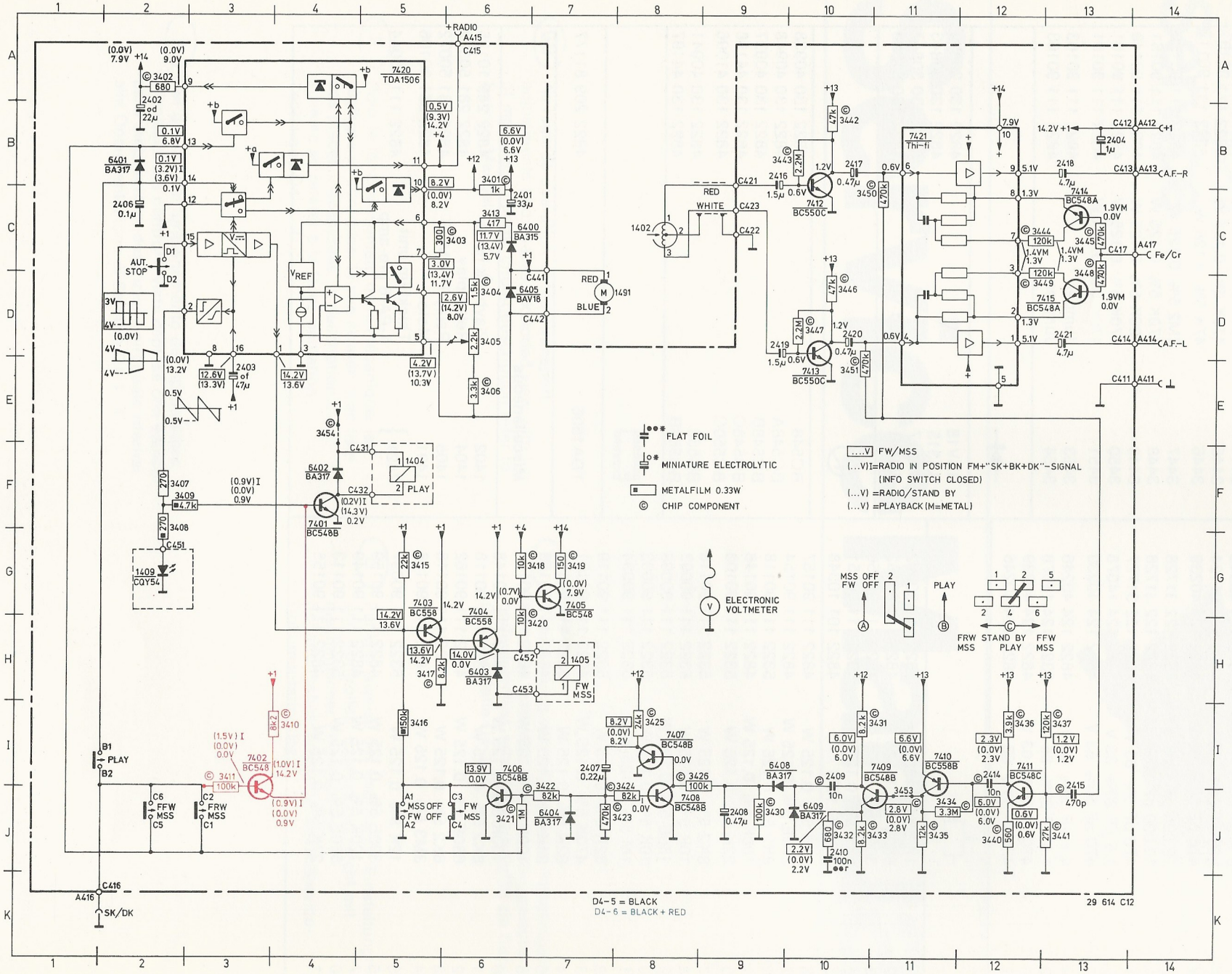
7420
TDA1506
7421
Thi-fi
7412
BC550C
7413
BC550C
7414
BC548A
7415
BC548A
7401
BC548B
7402
BC548
7403
BC558
7404
BC558
7405
BC548
7406
BC548B
7407
BC548B
7408
BC548B
7409
BC548B
7410
BC558B
7411
BC548C
1409
CQY54
1404
1405
1491
1402
6401
BA317
6402
BA317
6403
BA317
6404
BA317
6405
BAV18
6400
BA315
6408
BA317
6409
BA317
AUT. STOP
SK/DK
RED
WHITE
BLUE
C.A.F.-R
C.A.F.-L
Fe/Cr
ELECTRONIC VOLTMETER
FLAT FOIL
MINIATURE ELECTROLYTIC
METALFILM 0.33W
CHIP COMPONENT
FW/MSS
(...V)I=RADIO IN POSITION FM+"SK+BK+DK"-SIGNAL
(INFO SWITCH CLOSED)
(...V) =RADIO/STAND BY
(...V) =PLAYBACK (M=METAL)
MSS OFF
FW OFF
PLAY
FRW MSS
STAND BY PLAY
FFW MSS
MSS OFF
FW OFF
FW MSS
FRW MSS
PLAY
D4-5 = BLACK
D4-6 = BLACK + RED
29 614 C12

ITEM	CD	PCB
1402	C08	C01
1404	F05	D01
1405	H07	I08
1409	G02	H07
1491	D08	C09
2401	C06	C03
2402	A02	C04
2403	E03	B05
2404	B13	B04
2406	C02	B05
2407	I07	D09
2408	J09	D09
2409	I10	E07
2410	J10	D08
2414	I12	C04
2415	I13	C04
2416	B09	D02
2417	B10	D03
2418	B13	B04
2419	D09	B02
2420	D10	C03
2421	D13	B03
3401	B06	C05
3402	A02	C05
3403	C06	B07
3404	D06	B07
3405	D06	A07
3406	E06	B07
3407	F02	B06
3408	F02	D06
3409	F02	D06
3410	I04	D06
3411	I03	E09
3413	C06	B06
3415	G05	C07
3416	I05	D07
3417	H05	C07
3418	G06	D05
3419	G07	C06
3420	H06	D07
3421	J06	E10
3422	I07	E09
3423	J08	E09
3424	I08	D09
3425	I08	E09
3426	I08	D09
3430	J09	D08
3431	I10	E07
3432	J10	D08
3433	J10	D07
3434	J11	D04
3435	J11	C04
3436	I12	C05
3437	I13	B04
3440	J12	C04
3441	J13	B04
3442	B10	D03
3443	B09	D02
3444	C12	D03
3445	C13	C03
3446	D10	C03
3447	D10	C02
3448	C13	B03
3449	D12	B03
3450	C10	D04
3451	E10	C04
3453	I11	D05
3454	E04	D05
6400	C06	B07
6401	B02	B05
6402	F04	D02
6403	H06	C07
6404	J07	D10
6405	D06	B07
6408	I09	D08
6409	J10	D08
7401	F04	E03
7402	I03	D08
7403	G05	B07
7404	G06	C06
7405	G07	C08
7406	I06	E10
7407	I08	D09
7408	J08	D10
7409	I10	D07
7410	I11	D04
7411	I12	B04
7412	C10	C02
7413	E10	C02
7414	C13	D03
7415	D12	B03
7420	A05	B06
7421	B11	D04

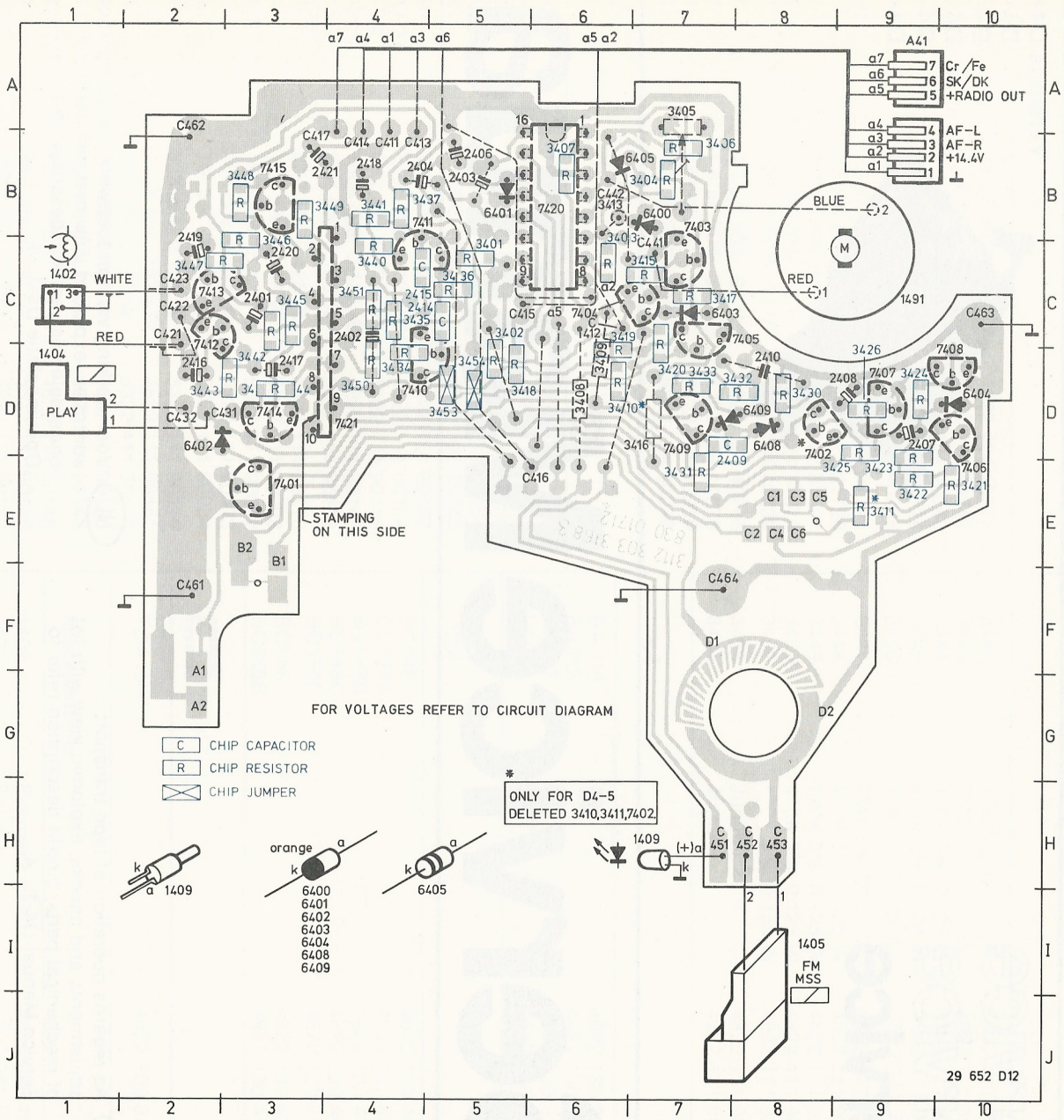

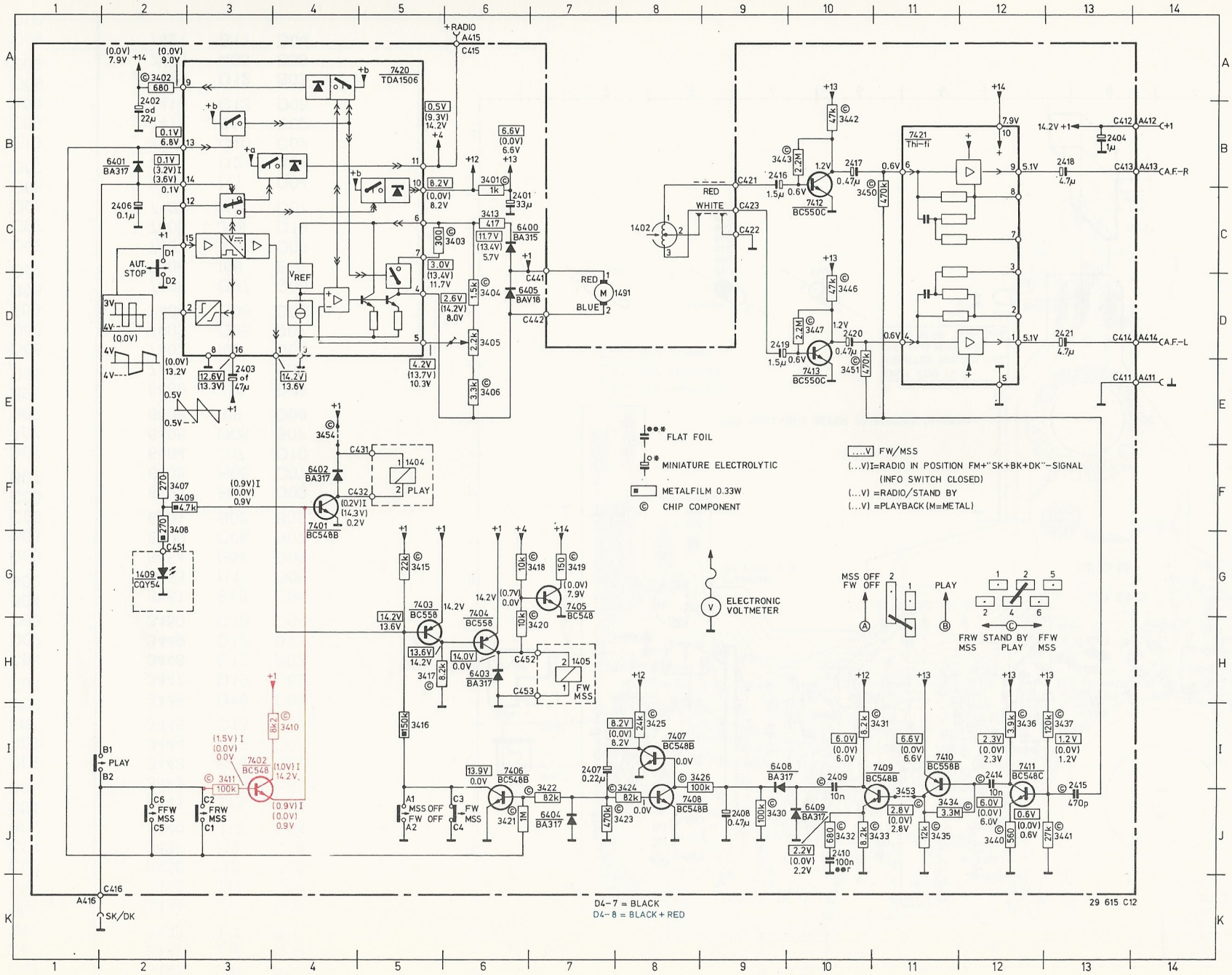
7420
TDA1506
+RADIO
A415
C415
7421
Thi-fi
7412
BC550C
7413
BC550C
C412
A412
C+1
C413
A413
CA.F.-R
C414
A414
CA.F.-L
C411
A411
C
RED
WHITE
C421
C423
C422
1402
RED
BLUE
1491
C441
C442
6400
BA315
6405
BAV16
AUT.
STOP
D1
D2
VREF
6401
BA317
2406
0.1µ
2402
22µ
3402
680
6402
BA317
7401
BC548B
C431
C432
1404
PLAY
3407
270
3409
4.7k
3408
270
C451
1409
CQY54
3454
7403
BC558
7404
BC558
7405
BC548
C452
C453
1405
FW
MSS
6403
BA317
6404
BA317
7406
BC548B
7407
BC548B
7408
BC548B
7409
BC548B
7410
BC558B
7411
BC548C
7402
BC548
B1
PLAY
B2
C6
FFW
MSS
C5
C2
FRW
MSS
C1
A1
MSS OFF
FW OFF
A2
C3
FW
MSS
C4
A416
C416
SK/DK
FLAT FOIL
MINIATURE ELECTROLYTIC
METALFILM 0.33W
CHIP COMPONENT
ELECTRONIC
VOLTMETER
MSS OFF
FW OFF
PLAY
FRW
MSS
STAND BY
PLAY
FFW
MSS
FW/MSS
(...V)I=RADIO IN POSITION FM+"SK+BK+DK"-SIGNAL
(INFO SWITCH CLOSED)
(...V) =RADIO/STAND BY
(...V) =PLAYBACK (M=METAL)
D4-7 = BLACK
D4-8 = BLACK + RED
29 615 C12

ITEM	CD	PCB
1402	C08	C01
1404	F05	D01
1405	H07	I08
1409	G02	H07
1491	D08	C09
2401	C06	C03
2402	A02	C04
2403	E03	B05
2404	B13	B04
2406	C02	B05
2407	I07	D09
2408	J09	D09
2409	I10	E07
2410	J10	D08
2414	I12	C04
2415	I13	C04
2416	B09	D02
2417	B10	D03
2418	B13	B04
2419	D09	B02
2420	D10	C03
2421	D13	B03
3401	B06	C05
3402	A02	C05
3403	C06	B07
3404	D06	B07
3405	D06	A07
3406	E06	B07
3407	F02	B06
3408	F02	D06
3409	F02	D06
3410	I04	D06
3411	I03	E09
3413	C06	B06
3415	G05	C07
3416	I05	D07
3417	H05	C07
3418	G06	D05
3419	G07	C06
3420	H06	D07
3421	J06	E10
3422	I07	E09
3423	J08	E09

ITEM	CD	PCB
3424	I08	D09
3425	I08	E09
3426	I08	D09
3430	J09	D08
3431	I10	E07
3432	J10	D08
3433	J10	D07
3434	J11	D04
3435	J11	C04
3436	I12	C05
3437	I13	B04
3440	J12	C04
3441	J13	B04
3442	B10	D03
3443	B09	D02
3446	D10	C03
3447	D10	C02
3450	C10	D04
3451	E10	C04
3453	I11	D05
3454	E04	D05
6400	C06	B07
6401	B02	B05
6402	F04	D02
6403	H06	C07
6404	J07	D10
6405	D06	B07
6408	I09	D08
6409	J10	D08
7401	F04	E03
7403	G05	B07
7404	G06	C06
7405	G07	C08
7406	I06	E10
7407	I08	D09
7408	J08	D10
7409	I10	D07
7410	I11	D04
7411	I12	B04
7412	C10	C02
7413	E10	C02
7420	A05	B06
7421	B11	D04

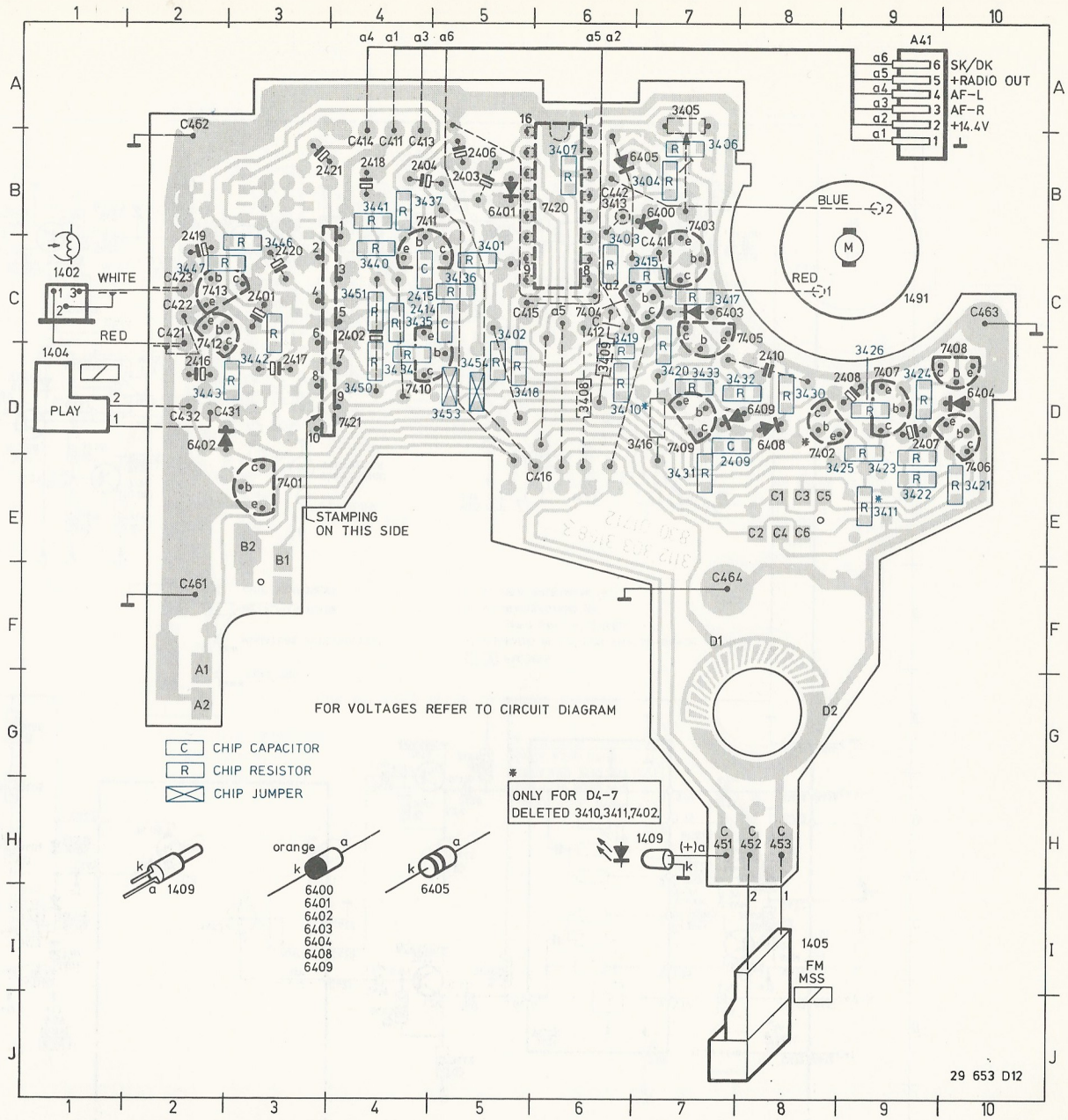

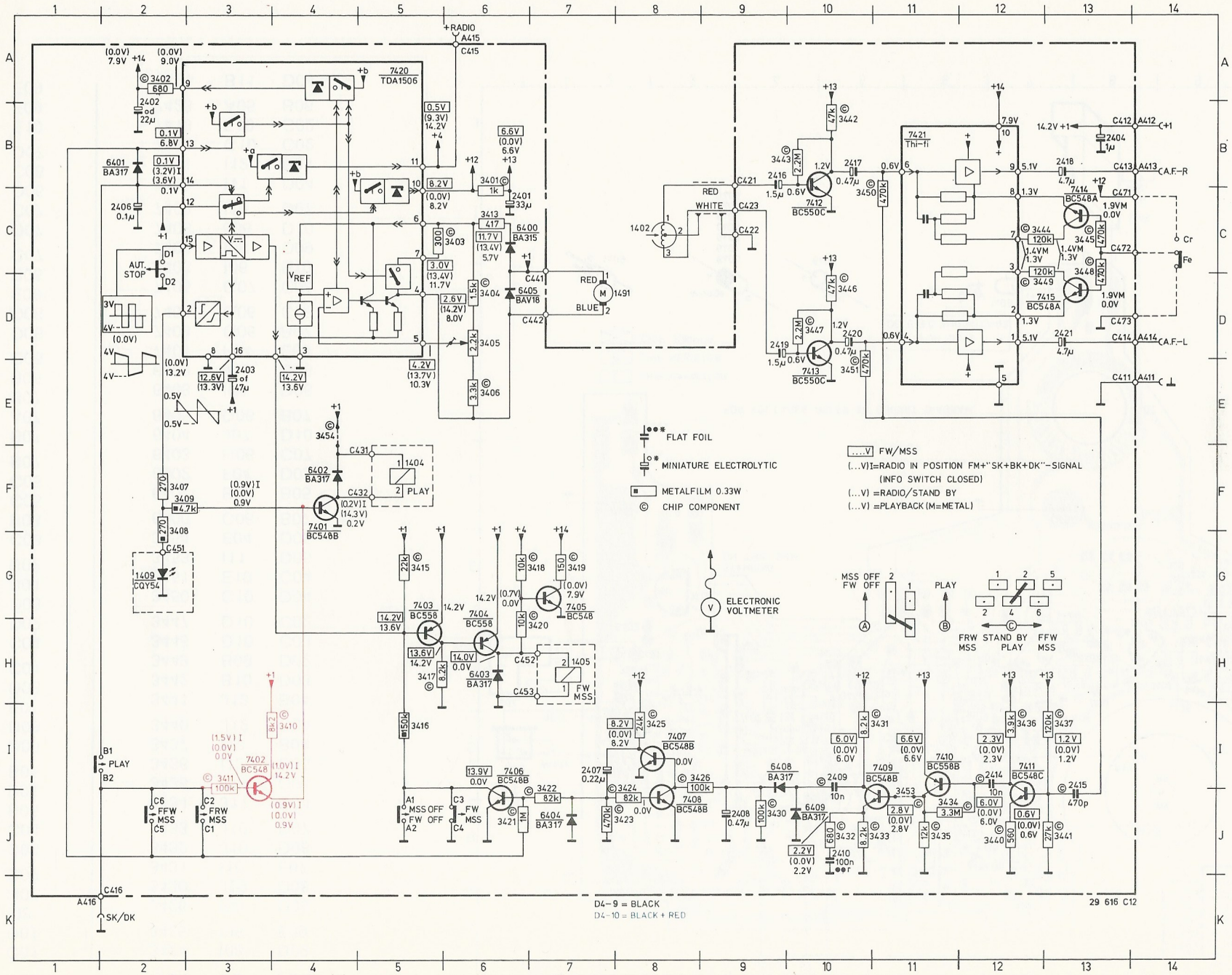
7420
TDA1506
7421
Thi-fi
7414
BC548A
7415
BC548A
7412
BC550C
7413
BC550C
7401
BC548B
7402
BC548
7403
BC558
7404
BC558
7405
BC548
7406
BC548B
7407
BC548B
7408
BC548B
7409
BC548B
7410
BC558B
7411
BC548C
1402
1491
1404
PLAY
1405
FW
MSS
1409
CQY54
6401
BA317
6402
BA317
6403
BA317
6404
BA317
6405
BAV18
6400
BA315
6408
BA317
6409
BA317
RED
WHITE
BLUE
+RADIO
A415
C415
C416
A416
SK/DK
A.F.-R
A.F.-L
Cr
Fe
FLAT FOIL
MINIATURE ELECTROLYTIC
METALFILM 0.33W
CHIP COMPONENT
ELECTRONIC
VOLTMETER
FW/MSS
(...V)I=RADIO IN POSITION FM+"SK+BK+DK"-SIGNAL
(INFO SWITCH CLOSED)
(...V) =RADIO/STAND BY
(...V) =PLAYBACK (M=METAL)
MSS OFF
FW OFF
PLAY
FRW
MSS
STAND BY
PLAY
FFW
MSS
D4-9 = BLACK
D4-10 = BLACK + RED
29 616 C12

ITEM	CD	PCB
1402	C08	C01
1404	F05	D01
1405	H07	I08
1409	G02	H07
1491	D08	C09
2401	C06	C03
2402	A02	C04
2403	E03	B05
2404	B13	B04
2406	C02	B05
2407	I07	D09
2408	J09	D09
2409	I10	E07
2410	J10	D08
2414	I12	C04
2415	I13	C04
2416	B09	D02
2417	B10	D03
2418	B13	B04
2419	D09	B02
2420	D10	C03
2421	D13	B03
3401	B06	C05
3402	A02	C05
3403	C06	B07
3404	D06	B07
3405	D06	A07
3406	E06	B07
3407	F02	B06
3408	F02	D06
3409	F02	D06
3410	I04	D06
3411	I03	E09
3413	C06	B06
3415	G05	C07
3416	I05	D07
3417	H05	C07
3418	G06	D05
3419	G07	C06
3420	H06	D07
3421	J06	E10
3422	I07	E09
3423	J08	E09
3424	I08	D09
3425	I08	E09
3426	I08	D09
3430	J09	D08

ITEM	CD	PCB
3431	I10	E07
3432	J10	D08
3433	J10	D07
3434	J11	D04
3435	J11	C04
3436	I12	C05
3437	I13	B04
3440	J12	C04
3441	J13	B04
3442	B10	D03
3443	B09	D02
3444	C12	D03
3445	C13	C03
3446	D10	C03
3447	D10	C02
3448	C13	B03
3449	D12	B03
3450	C10	D04
3451	E10	C04
3453	I11	D05
3454	E04	D05
6400	C06	B07
6401	B02	B05
6402	F04	D02
6403	H06	C07
6404	J07	D10
6405	D06	B07
6408	I09	D08
6409	J10	D08
7401	F04	E03
7402	I03	D08
7403	G05	B07
7404	G06	C06
7405	G07	C08
7406	I06	E10
7407	I08	D09
7408	J08	D10
7409	I10	D07
7410	I11	D04
7411	I12	B04
7412	C10	C02
7413	E10	C02
7414	C13	D03
7415	D12	B03
7420	A05	B06
7421	B11	D04

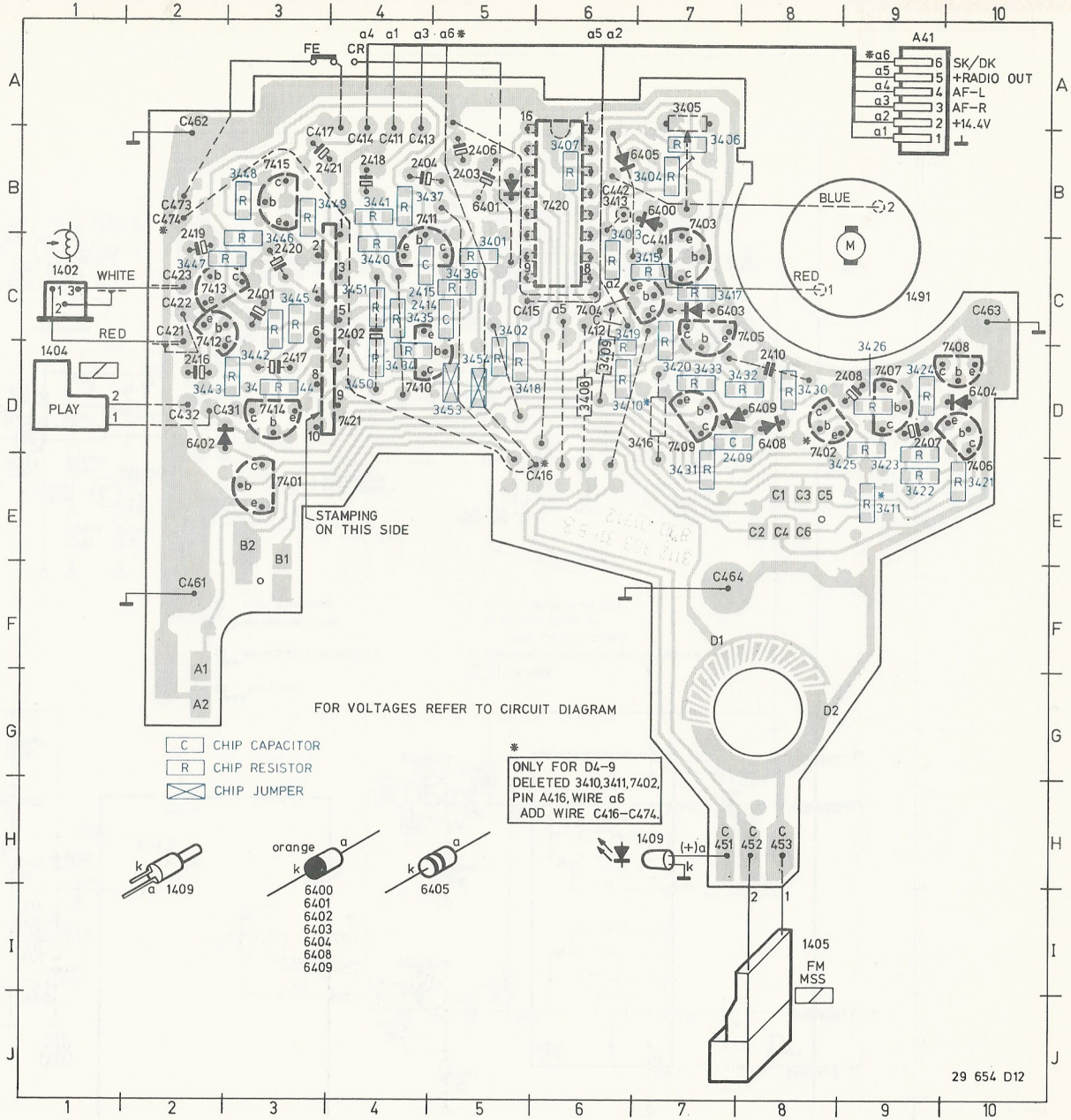

Previously published: A81-366, A82-309, A82-324

Changes introduced in the course of production:

At production start-up chip resistor 3435 has been replaced by carbon resistor 0,2 W (▲) in D4-5/-6/-7/-8/-9/-10. The value remains 12 kΩ.

In week 234 the press-down force of the leaf spring on the cassette has been changed to 1,6 ± 0,2 N.
Reason: prevent cassette from being ejected poorly if at all.
Remark: The press-down force can be measured with a pre-stretched cord which is with a loop placed round the end of the leaf spring. The press-down force can be adjusted by bending the lug onto which the leaf spring has been riveted.

In week 243 and with change code WA01 a motor with changed wiring and adapted screening cap has been introduced in the versions D4-5/-6/-7/-8/-9/-10 code number 4822 361 20382.
Reason: quality improvement

At the same time a modified pulley, item 112 has been applied. This pulley has been treated with antistatic agent. The stock at Concern Service will be adapted. The code number remains unchanged.
Reason: prevent electro static charge of the belt.

Printed in the Netherlands