MITSUBISHI

SERVICE MANUAL

STEREO AMPLIFIER & BOOSTER WITH EQUALIZER

MODEL : CV-231

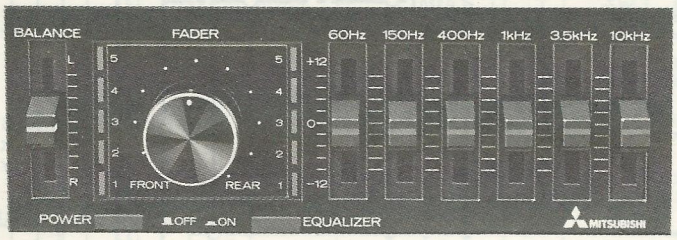

SPECIFICATIONS

- BTL 2 channel circuit
- Power output (per channel)
  - Max. (input Low:500mV, High:6V) 25 W
  - At THD 10% 17 W
  - At THD 1% 13 W
- Frequency response (−3 dB) 25 ~ 25000 Hz
- Total harmonic distortion (at 1KHz. 1W) 0.1 %
- Channel separation (at 1KHz, 1W) 70 dB
- S/N Ratio (at 1KHz, 1W) 70 dB
- Input impedance
  - Low level 10K ohms
  - High level 180 ohms
- Load impedance 4 ohms
- Current consumption (1W x 2) 1.2 A
- Maximum current consumption 4.7 A
- Semiconductors
  - Integrated Circuits 4 pcs.
  - Transistiors 2 pcs.
  - Diodes 20 pcs.
- Equalize frequency 60, 150, 400, 1K, 3.5K, 10K Hz
- Equalize gain ± 12 dB
- Dimensions
  - Chassis (H x W x D) 50 x 144 x 158 mm
  - (H x W x D) 2 x 5-11/16 x 6-1/4 in.
- Weight 1.1 kg (2.4 lbs.)
- Power requirement 14.4 V

FEATURES

- 25 watts maximum per channel at 4 ohms.
- Balanced transformer less (BTL) circuitry.
- 6-band graphic equalizer.
- Fader and balance controls for 4-speaker system.
- Dual high and low level inputs.
- Equalizer defeat switch.
- Power on/off switch.
- 2-channel power level indicators.
- Illuminated equalizer controls.
- Compact design. (2 x 5-11/16 x 6-1/4'')

MITSUBISHI ELECTRIC AUSTRALIA PTY. LTD.

73-75 EPPING ROAD NORTH RYDE N.S.W. 2113 SYDNEY AUSTRALIA

EXPLODED VIEW

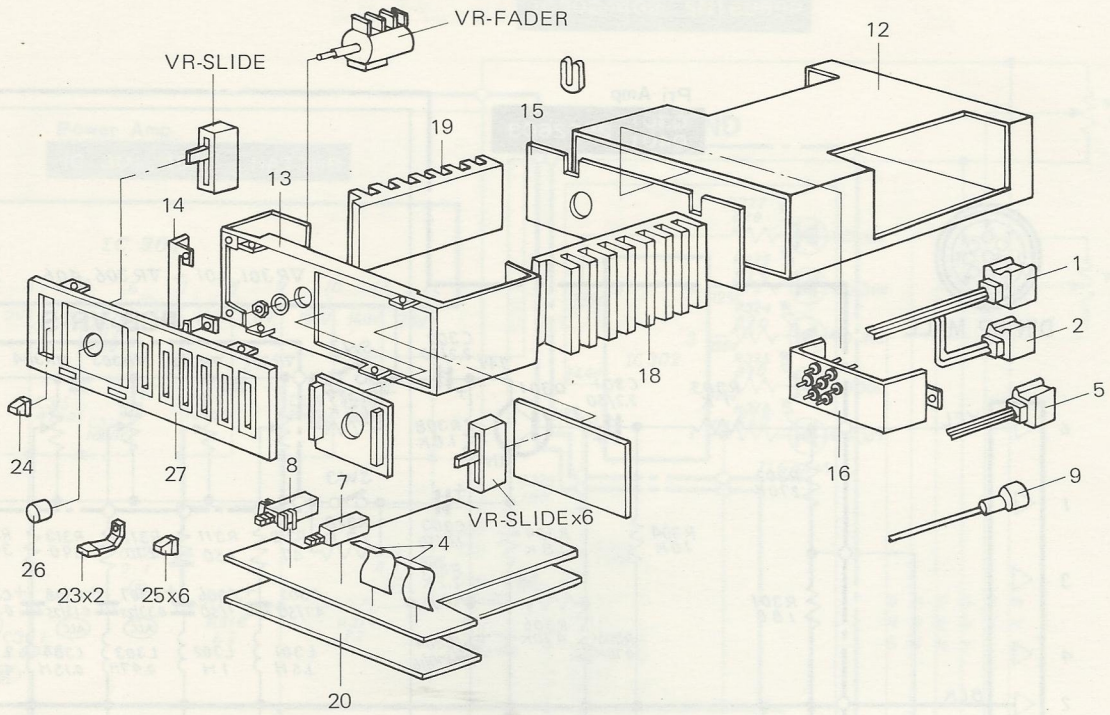

PARTS LIST

Ref. No.	Part No.	Description
ELECTRICAL PARTS LIST		
RESISTORS & CAPACITOR		
VR409	127L00207	VR-SEMIFIXED 100K
VR307	129L10201	VR-SLIDE 100K
VR308, 408	129L17401	VR-FADER 40Ω
VR301~306, 401~406	129L17501	VR-SLIDE 50K
CP1~12	141P02001	C-CERAMIC 1000PF
SEMICONDUCTORS		
Q301, 401	260P33802	TR 2SC2603E
D303~307, 403~407	264M00501	LED TLG-205
D301. 302, 401, 402	264P01306	DIODE 1N60P
D314	264P13201	DIODE GM-3Z
D308~313	264P35701	LED LN351GCPP-G
IC303, 403	266M00901	IC SN16889P
IC301, 401	266P35201	IC HA1388
COILS & TRANSFORMER		
L304, 404	351L00403	COIL 0.15H
L303, 403	351L00404	COIL 0.47H
L302, 402	351L00405	COIL 1H
L301, 401	351L00406	COIL 1.5H
L305, 405	351L01501	COIL 43mH
L306, 406	351L01601	COIL 10mH
L307	351M00803	TRANS-CHOKE 1.5mH

Ref. No.	Part No.	Description
MECHANICAL PARTS LIST		
1	242L14802	LEAD-6CM (J301)
2	242L14904	LEAD-4CM (J302)
3	242L15105	LEAD-C (ACCESORY-LEAD)
4	242L24009	PC-JOINER (JP1, 2)
5	242L48001	LEAD-9C
6	242M14301	LEAD-C (ACCESORY-LEAD)
7	432L03402	SW-PUSH-P (SW2)
8	432L03803	SW-PUSH-P (SW1)
9	450L05401	DIN-CABLE-8P
10	453M00101	CAP-9P
11	459M02101	CAP-DIN
12	590J00801	COVER-SLEEVE
13	590L83302	PLATE-FRONT
14	590L83401	PLATE-SIDE
15	591L08201	BACK-COVER
16	591L08301	SHIELD-CASE
17	592M15401	SHIELD-CAP-T
18	635L00901	HEAT-SINK (R)
19	635L01001	HEAT-SINK (L)
20	642L00801	INSULATOR
21	642M21401	INSULATOR
22	642M21402	INSULATOR
23	704L09701	KNOB-PUSH
24	704M61301	KNOB-EQ-LED
25	704M61401	KNOB-EQ
26	963L11102	ASSY-KNOB
27	963L14903	ASSY-PANEL

SCHEMATIC DIAGRAM

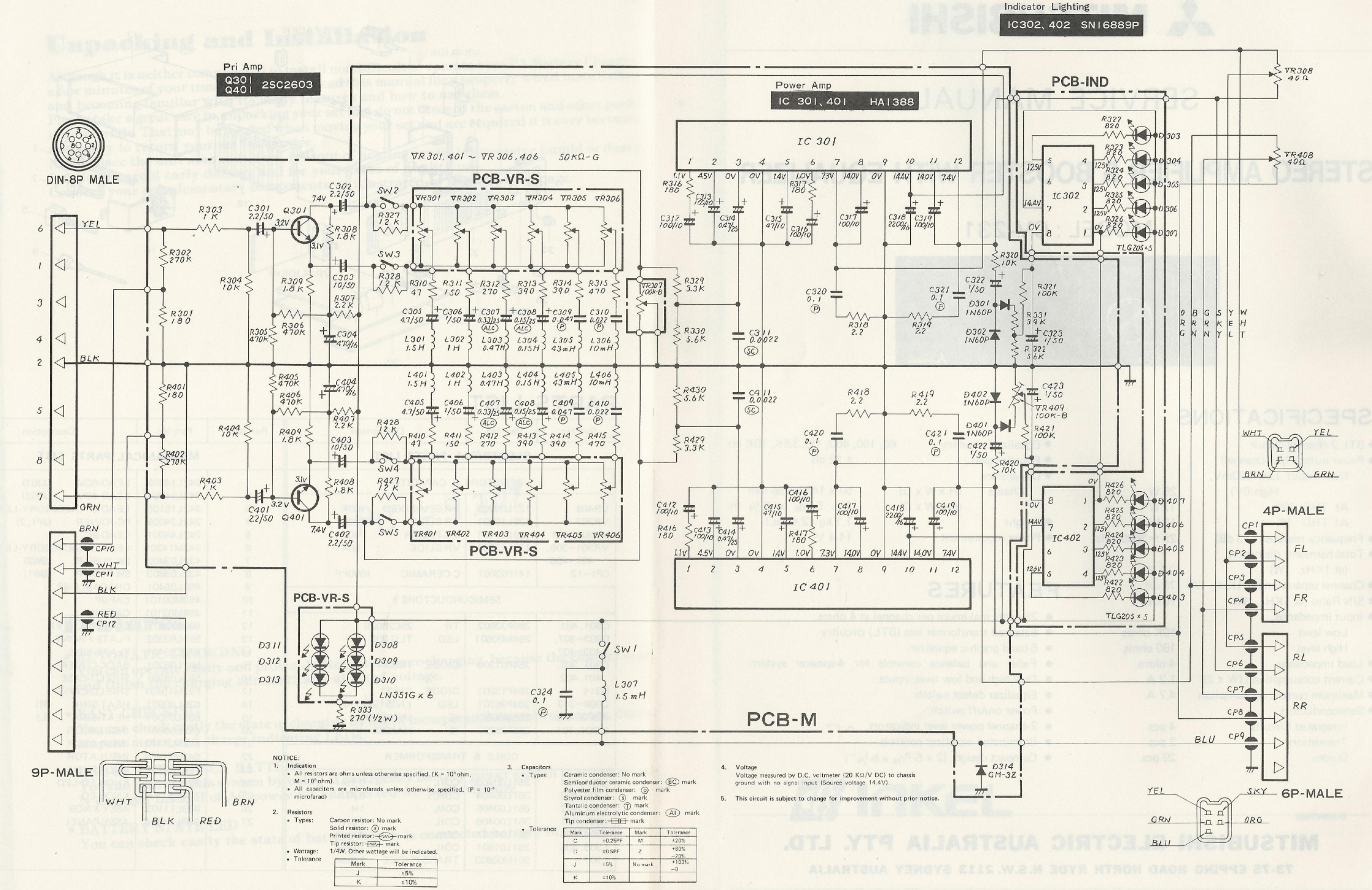

NOTICE:

1. Indication
   - All resistors are ohms unless otherwise specified. (K = 10^3 ohm, M = 10^6 ohm)
   - All capacitors are microfarads unless otherwise specified. (P = 10^{-6} microfarad)
2. Resistors
   - Types: Carbon resistor: No mark; Solid resistor: (S) mark; Printed resistor: mark; Tip resistor: mark
   - Wattage: 1/4W. Other wattage will be indicated.
   - Tolerance

Mark	Tolerance
J	±5%
K	±10%

3. Capacitors
   - Types: Ceramic condenser: No mark; Semiconductor ceramic condenser: (BC) mark; Polyester film condenser: (P) mark; Styrol condenser: (S) mark; Tantalic condenser: (T) mark; Aluminum electrolytic condenser: (Al) mark; Tip condenser: mark
   - Tolerance

Mark	Tolerance	Mark	Tolerance
C	±0.25PF	M	±20%
D	±0.5PF	Z	+80% −20%
J	±5%	No mark	+100% −0
K	±10%		

4. Voltage
   Voltage measured by D.C. voltmeter (20 KΩ/V DC) to chassis ground with no signal input (Source voltage 14.4V).
5. This circuit is subject to change for improvement without prior notice.
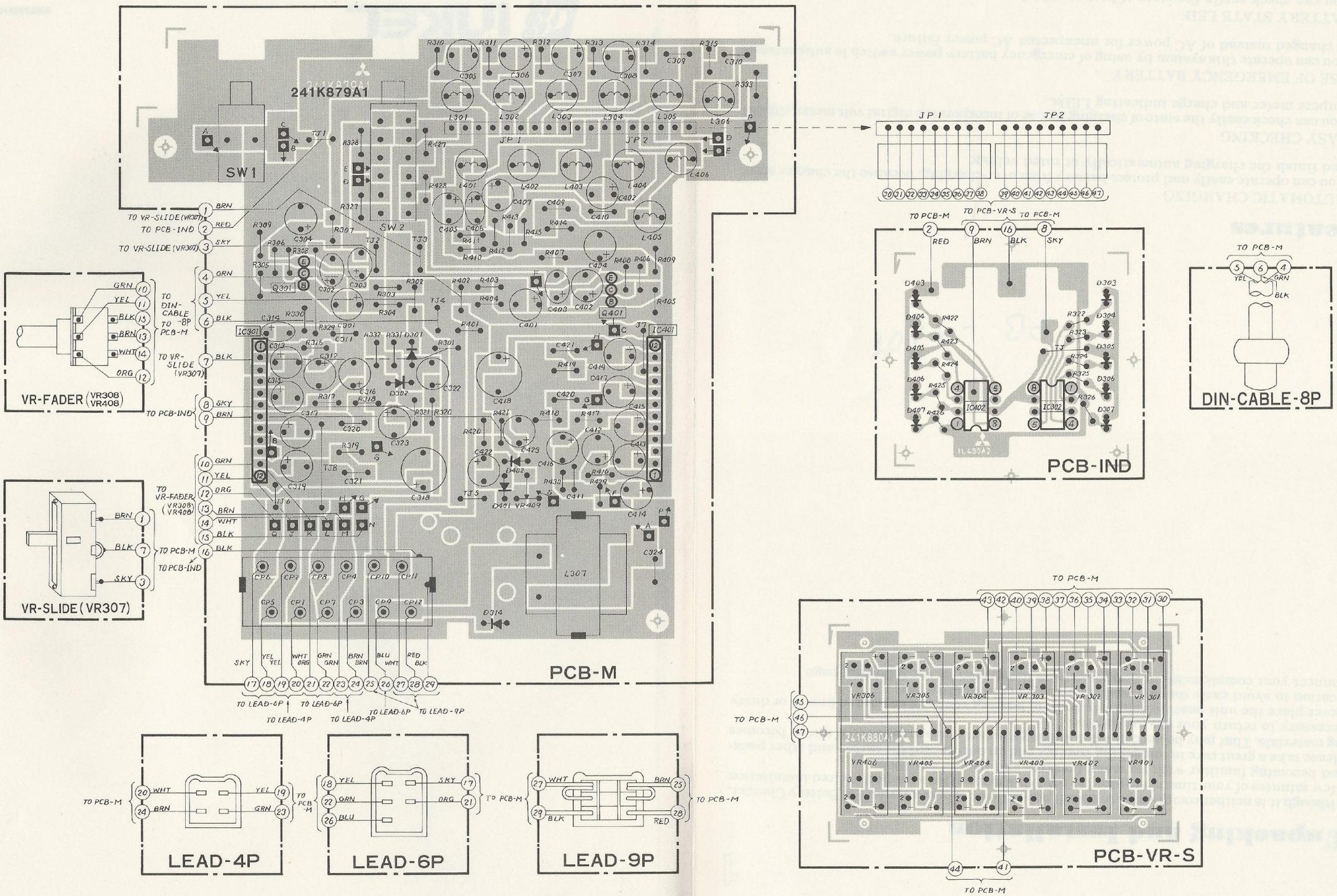
PRINTED CIRCUIT BOARD (Pettern Side)