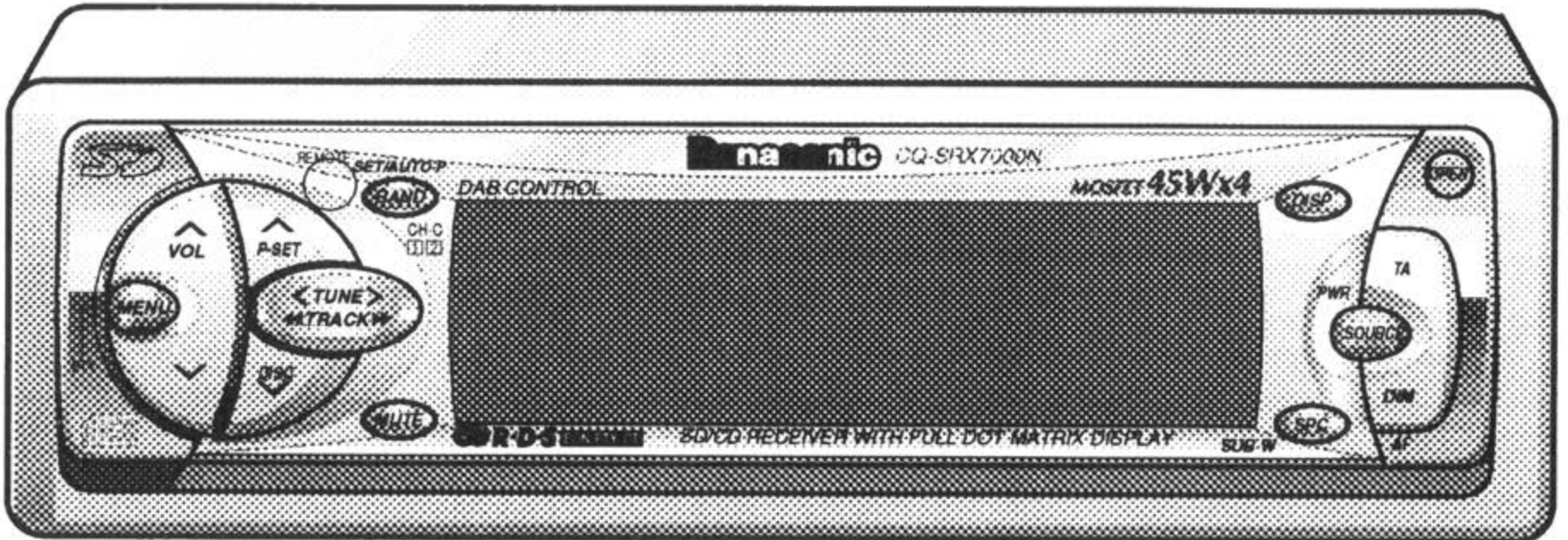
Panasonic
CQ-SRX7000N
REMOTE
SET/AUTO-P
BAND
DAB CONTROL
MOSFET 45Wx4
DISP
OPEN
CH-C
VOL
P-SET
TUNE
TRACK
MENU
DISC
TA
PWR
SOURCE
DIM
MUTE
SRC
AF
SUB-W
R·D·S
SD/CD RECEIVER WITH FULL DOT MATRIX DISPLAY

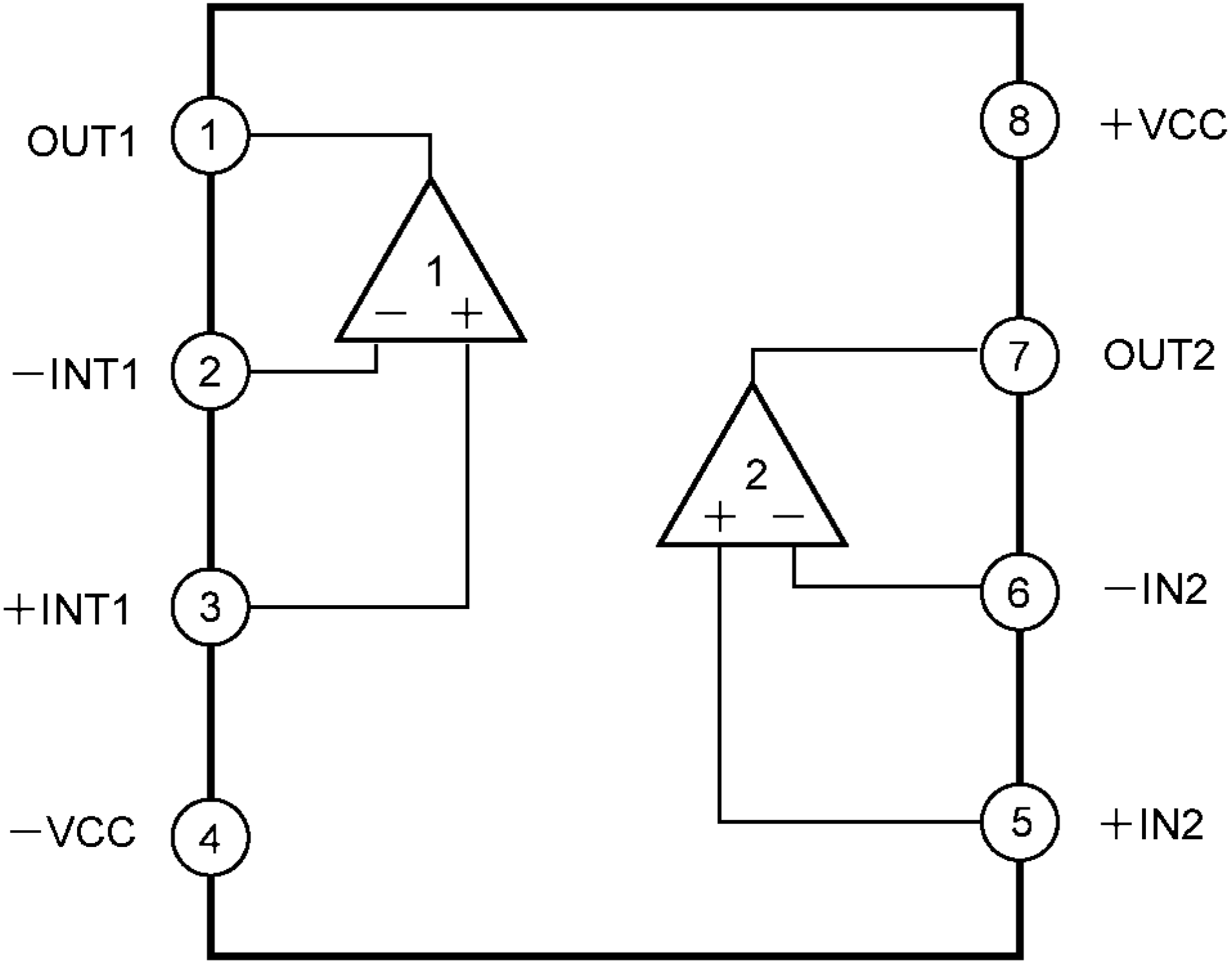
OUT1
1
−INT1
2
+INT1
3
−VCC
4
8
+VCC
7
OUT2
6
−IN2
5
+IN2
1
2

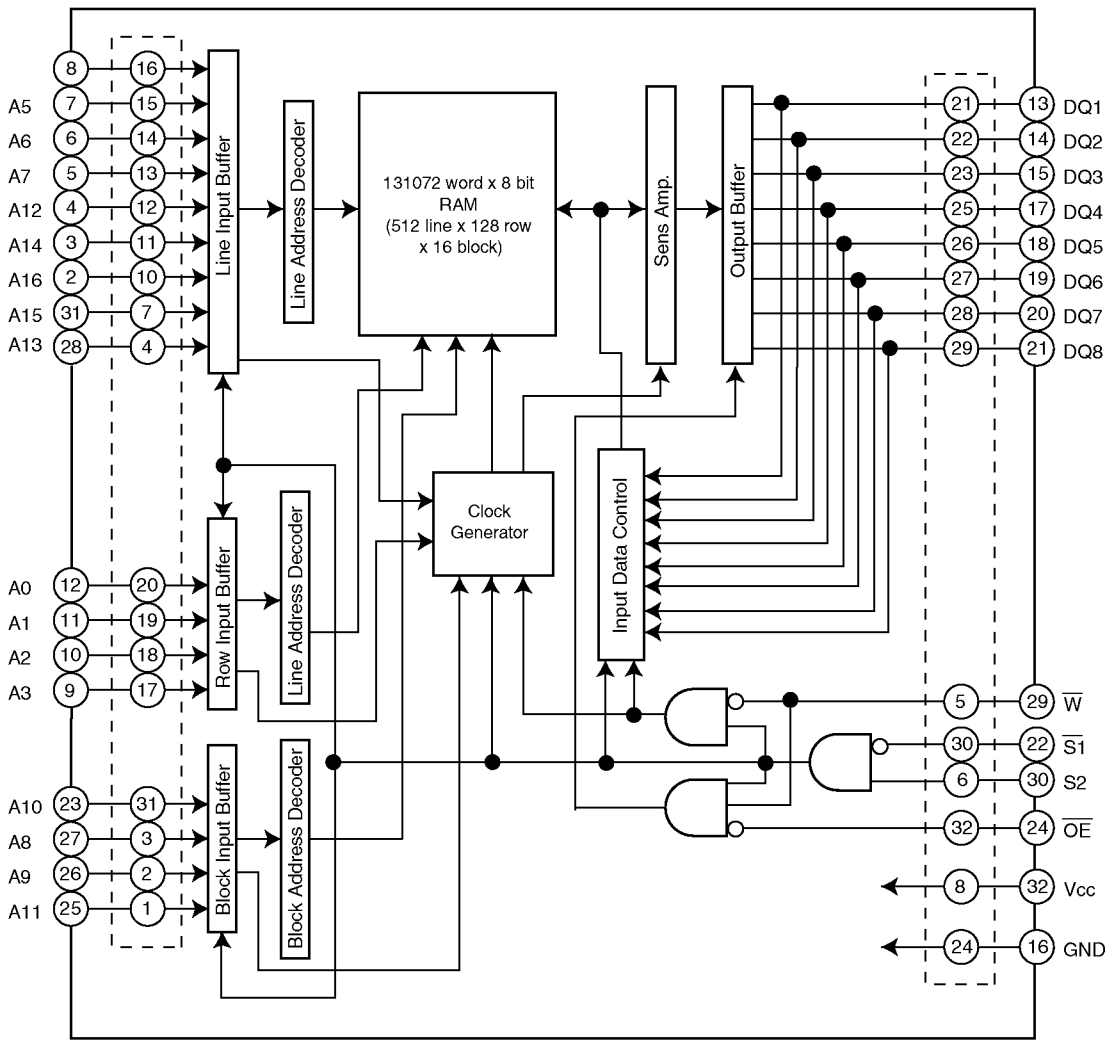
A5
A6
A7
A12
A14
A16
A15
A13
A0
A1
A2
A3
A10
A8
A9
A11
Line Input Buffer
Row Input Buffer
Block Input Buffer
Line Address Decoder
Line Address Decoder
Block Address Decoder
131072 word x 8 bit
RAM
(512 line x 128 row
x 16 block)
Clock
Generator
Sens Amp.
Output Buffer
Input Data Control
DQ1
DQ2
DQ3
DQ4
DQ5
DQ6
DQ7
DQ8
W
S1
S2
OE
Vcc
GND

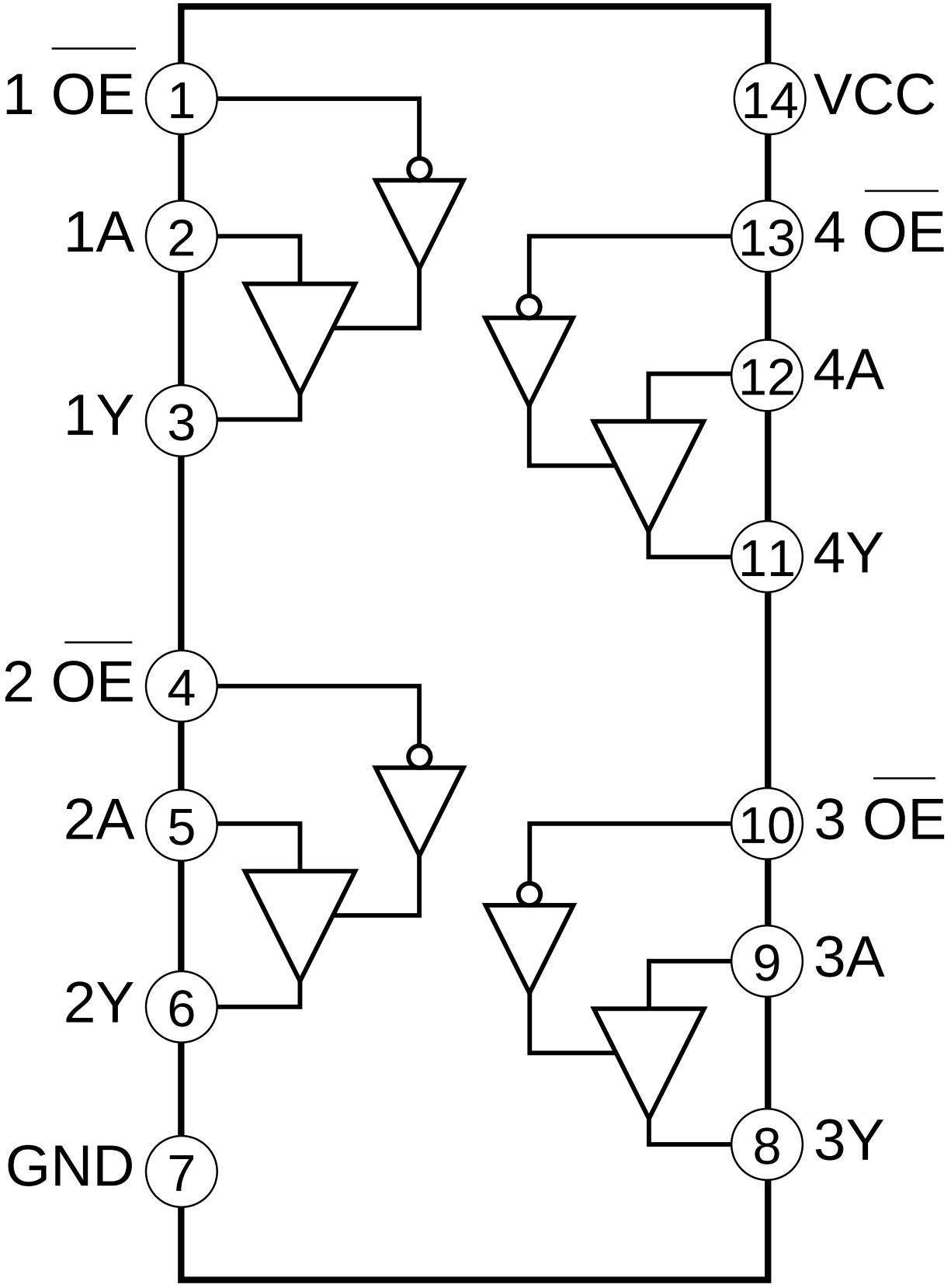
1 OE
1
1A
2
1Y
3
2 OE
4
2A
5
2Y
6
GND
7
14
VCC
13
4 OE
12
4A
11
4Y
10
3 OE
9
3A
8
3Y

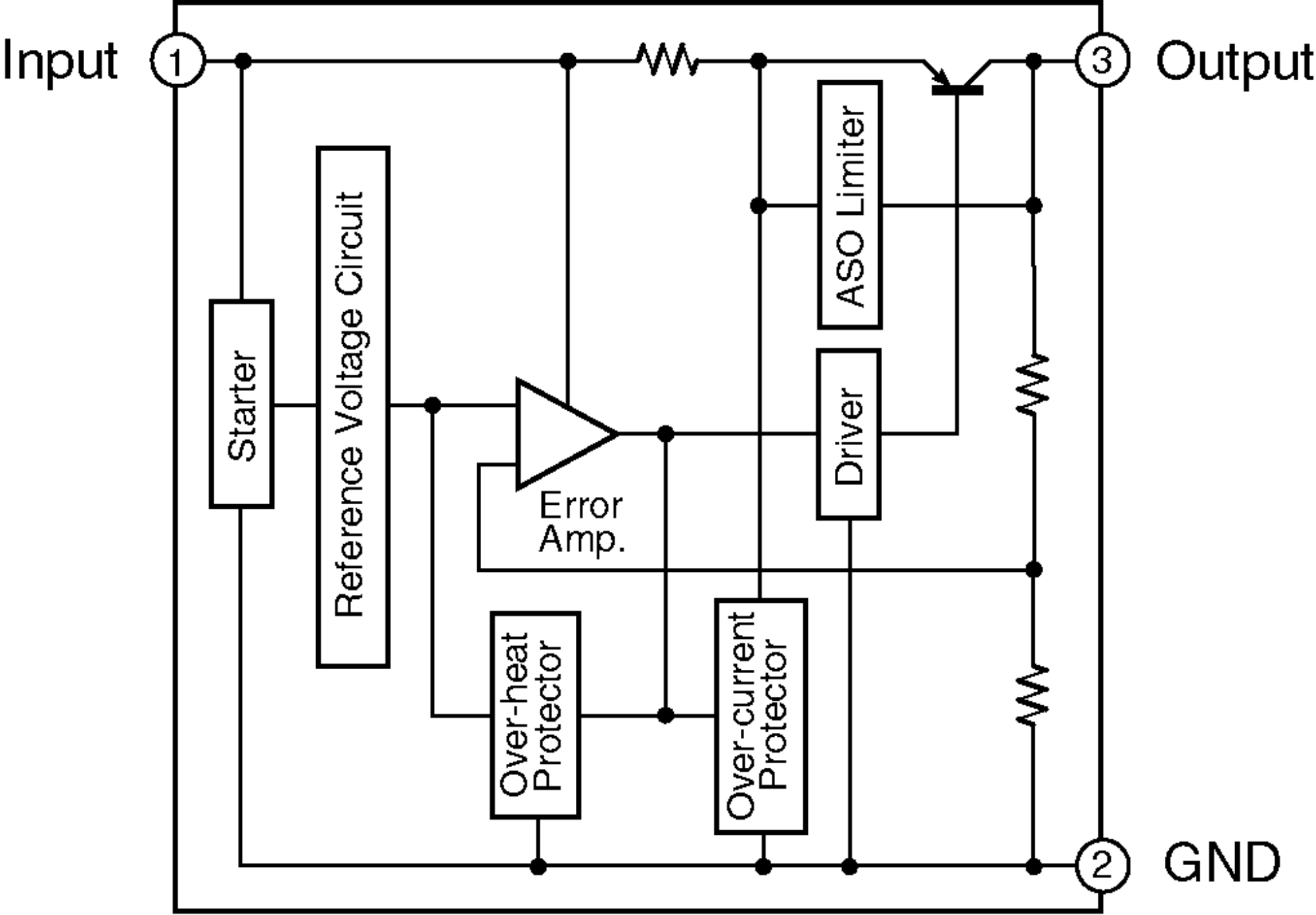
Input
1
Output
3
GND
2
Starter
Reference Voltage Circuit
Error
Amp.
ASO Limiter
Driver
Over-heat
Protector
Over-current
Protector

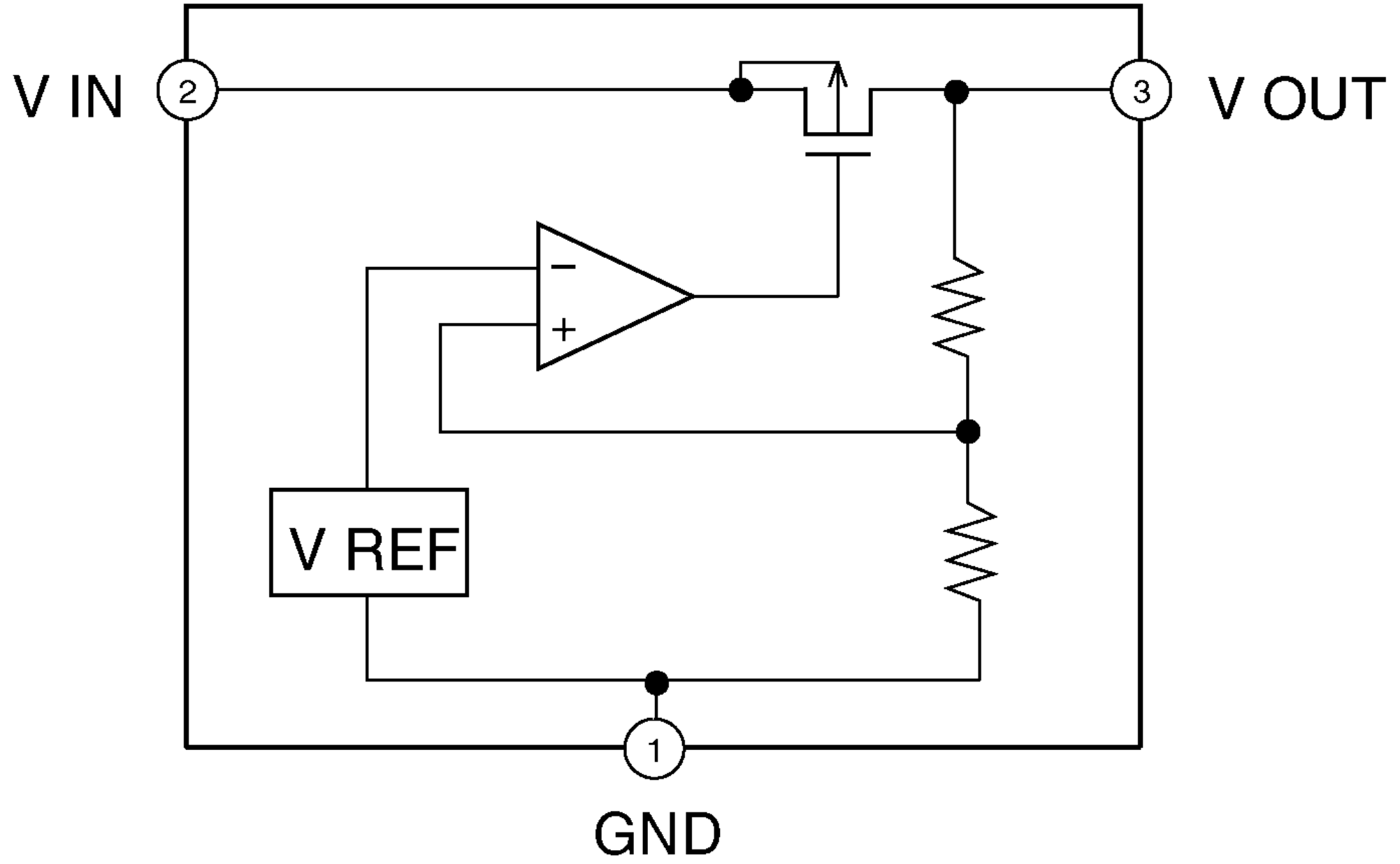
V IN
2
3
V OUT
−
+
V REF
1
GND

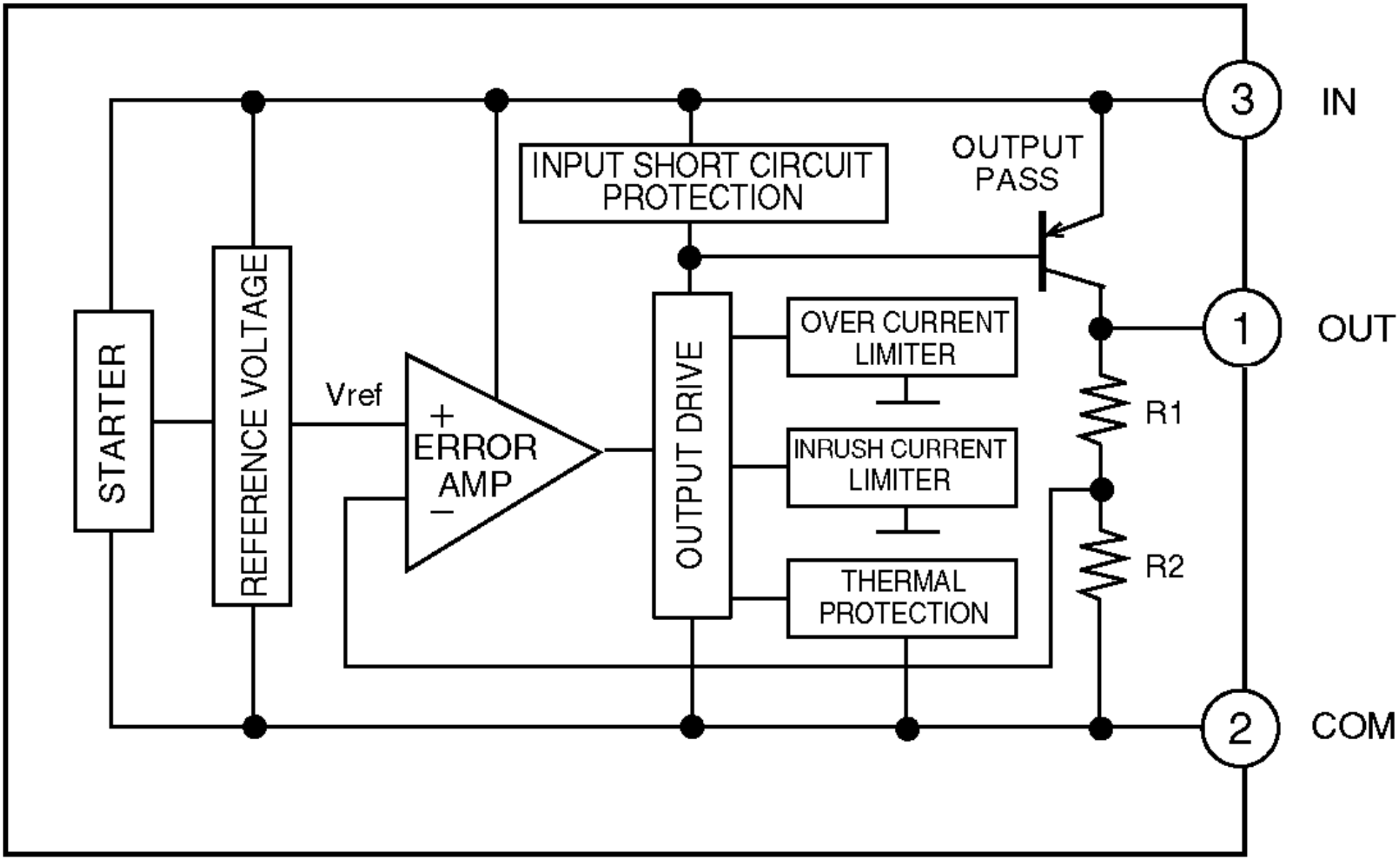
3
IN
OUTPUT
PASS
INPUT SHORT CIRCUIT
PROTECTION
STARTER
REFERENCE VOLTAGE
Vref
+
ERROR
AMP
−
OUTPUT DRIVE
OVER CURRENT
LIMITER
INRUSH CURRENT
LIMITER
THERMAL
PROTECTION
1
OUT
R1
R2
2
COM

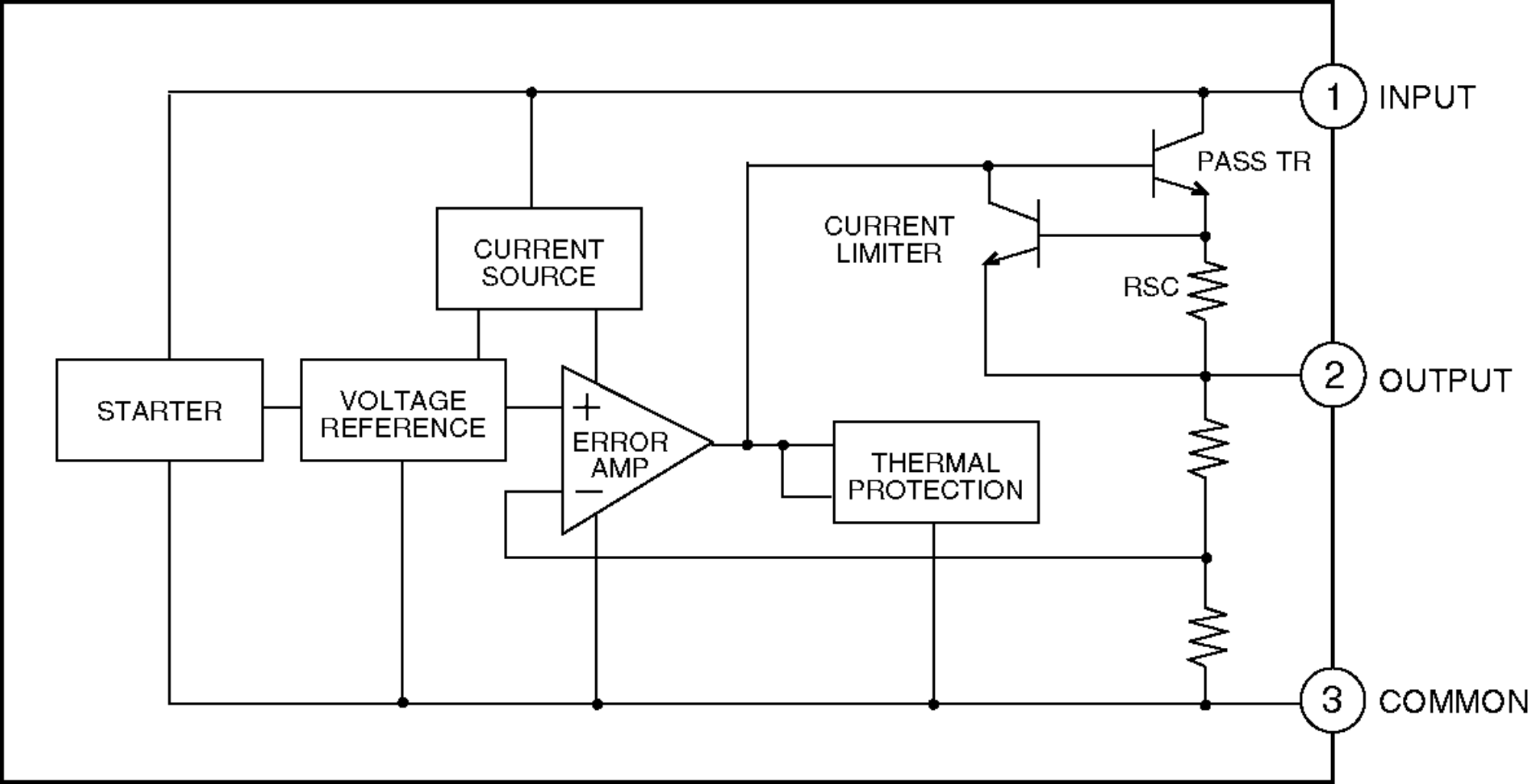
1
INPUT
PASS TR
CURRENT
LIMITER
CURRENT
SOURCE
RSC
STARTER
VOLTAGE
REFERENCE
+
ERROR
AMP
−
THERMAL
PROTECTION
2
OUTPUT
3
COMMON

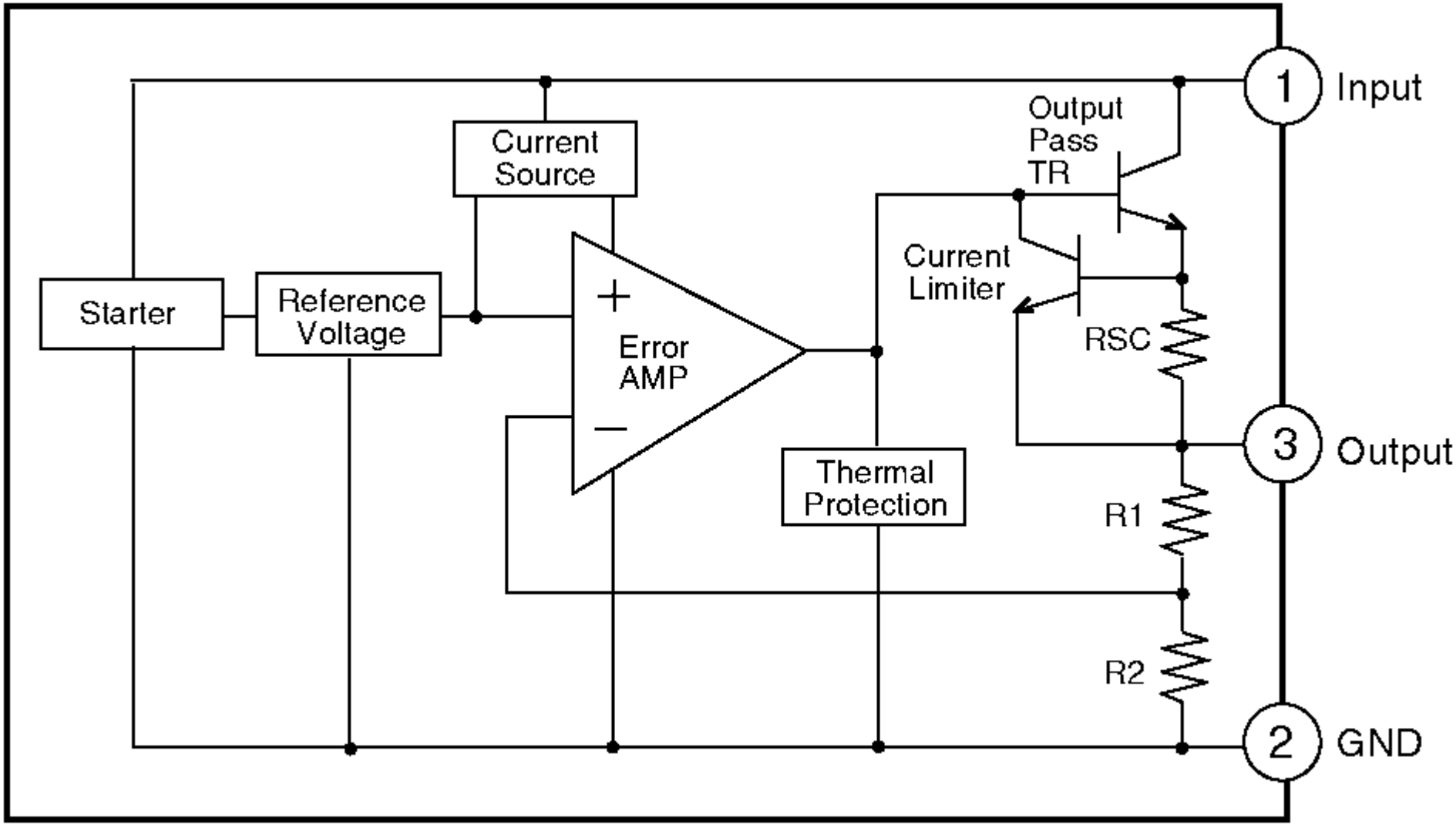
Input
Output
GND
Starter
Reference Voltage
Current Source
Error AMP
+
−
Thermal Protection
Current Limiter
Output Pass TR
RSC
R1
R2
1
2
3

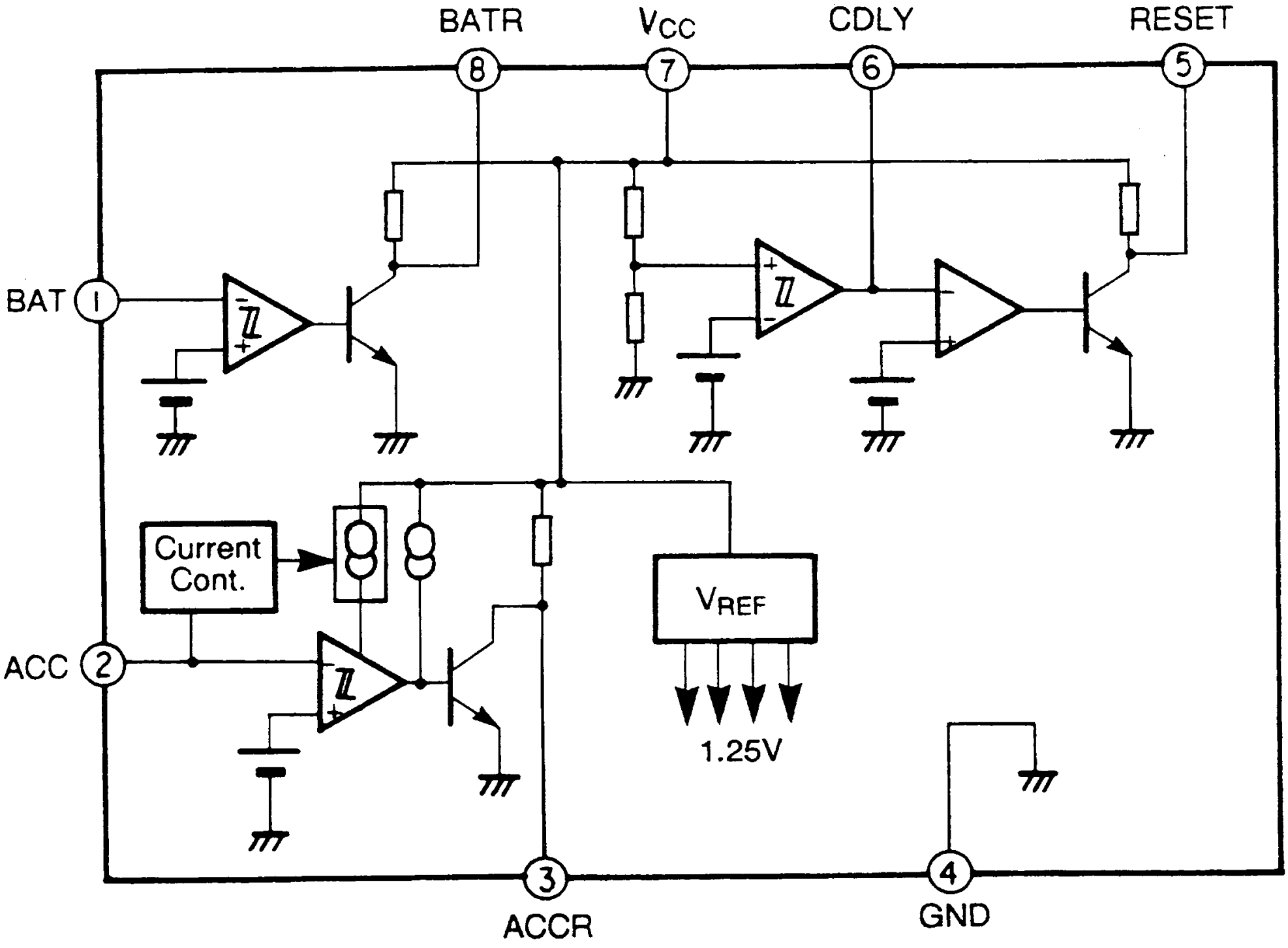
BATR
VCC
CDLY
RESET
8
7
6
5
BAT
1
Current Cont.
VREF
ACC
2
1.25V
3
ACCR
4
GND

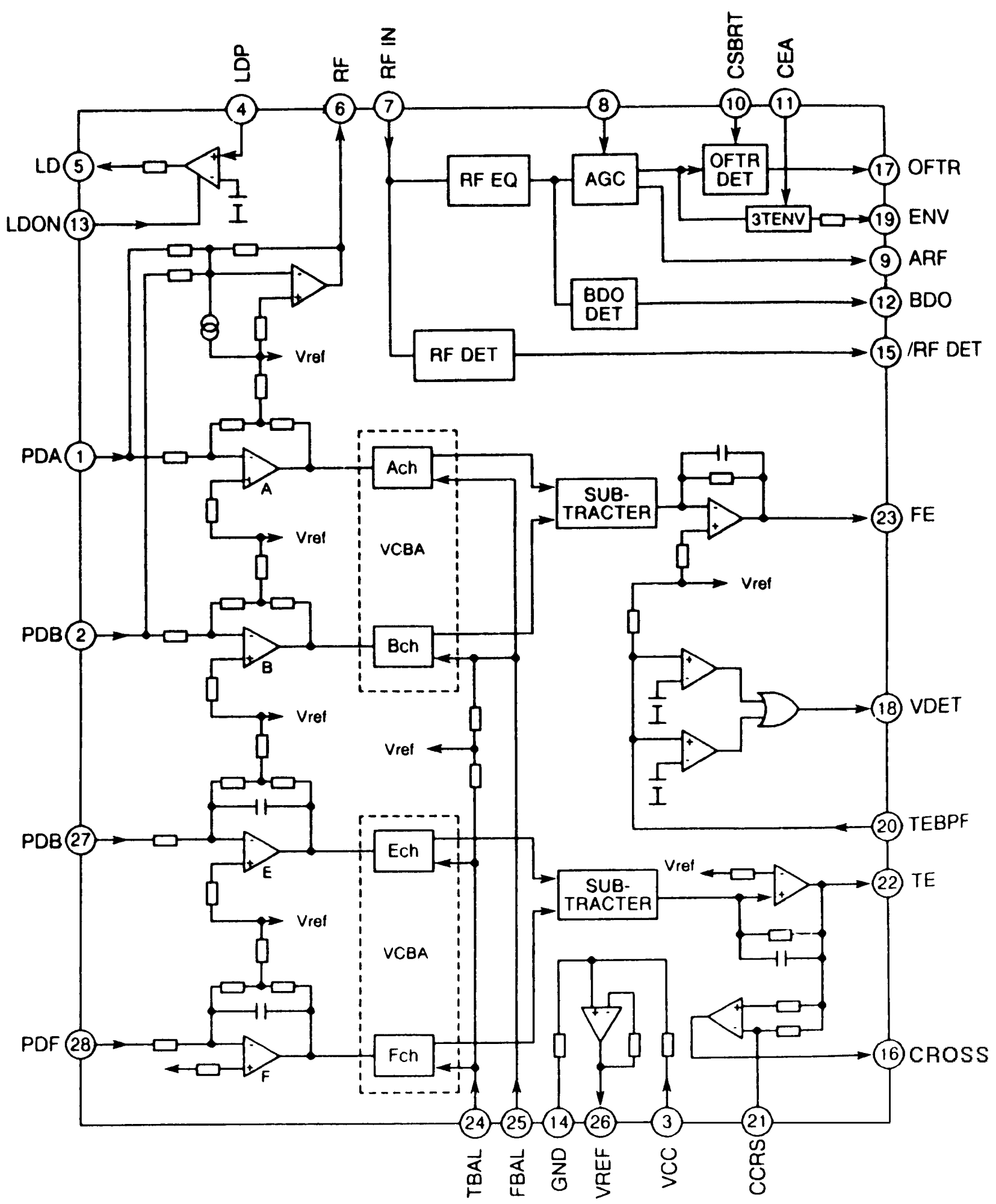
LDP
RF
RF IN
CSBRT
CEA
LD
LDON
RF EQ
AGC
OFTR DET
3TENV
OFTR
ENV
ARF
BDO DET
BDO
RF DET
/RF DET
Vref
PDA
PDB
PDB
PDF
A
B
E
F
Ach
Bch
Ech
Fch
VCBA
VCBA
SUB-TRACTER
SUB-TRACTER
FE
VDET
TEBPF
TE
CROSS
TBAL
FBAL
GND
VREF
VCC
CCRS

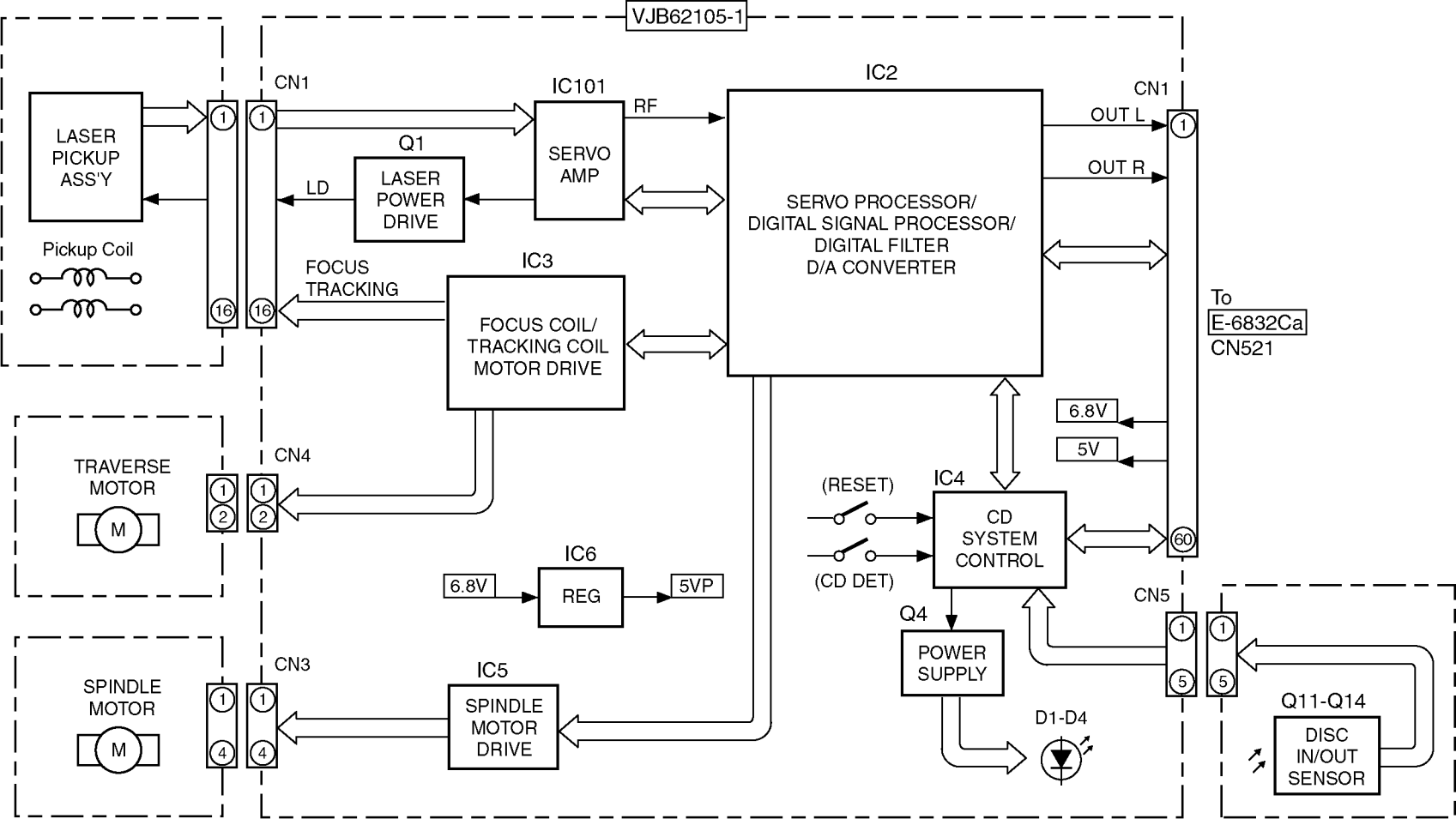
VJB62105-1
LASER PICKUP ASS'Y
Pickup Coil
CN1
IC101
SERVO AMP
RF
Q1
LASER POWER DRIVE
LD
IC2
SERVO PROCESSOR/ DIGITAL SIGNAL PROCESSOR/ DIGITAL FILTER D/A CONVERTER
CN1
OUT L
OUT R
To
E-6832Ca
CN521
FOCUS
TRACKING
IC3
FOCUS COIL/ TRACKING COIL MOTOR DRIVE
TRAVERSE MOTOR
CN4
6.8V
5V
(RESET)
IC4
CD SYSTEM CONTROL
(CD DET)
IC6
6.8V
REG
5VP
Q4
POWER SUPPLY
CN5
SPINDLE MOTOR
CN3
IC5
SPINDLE MOTOR DRIVE
D1-D4
Q11-Q14
DISC IN/OUT SENSOR

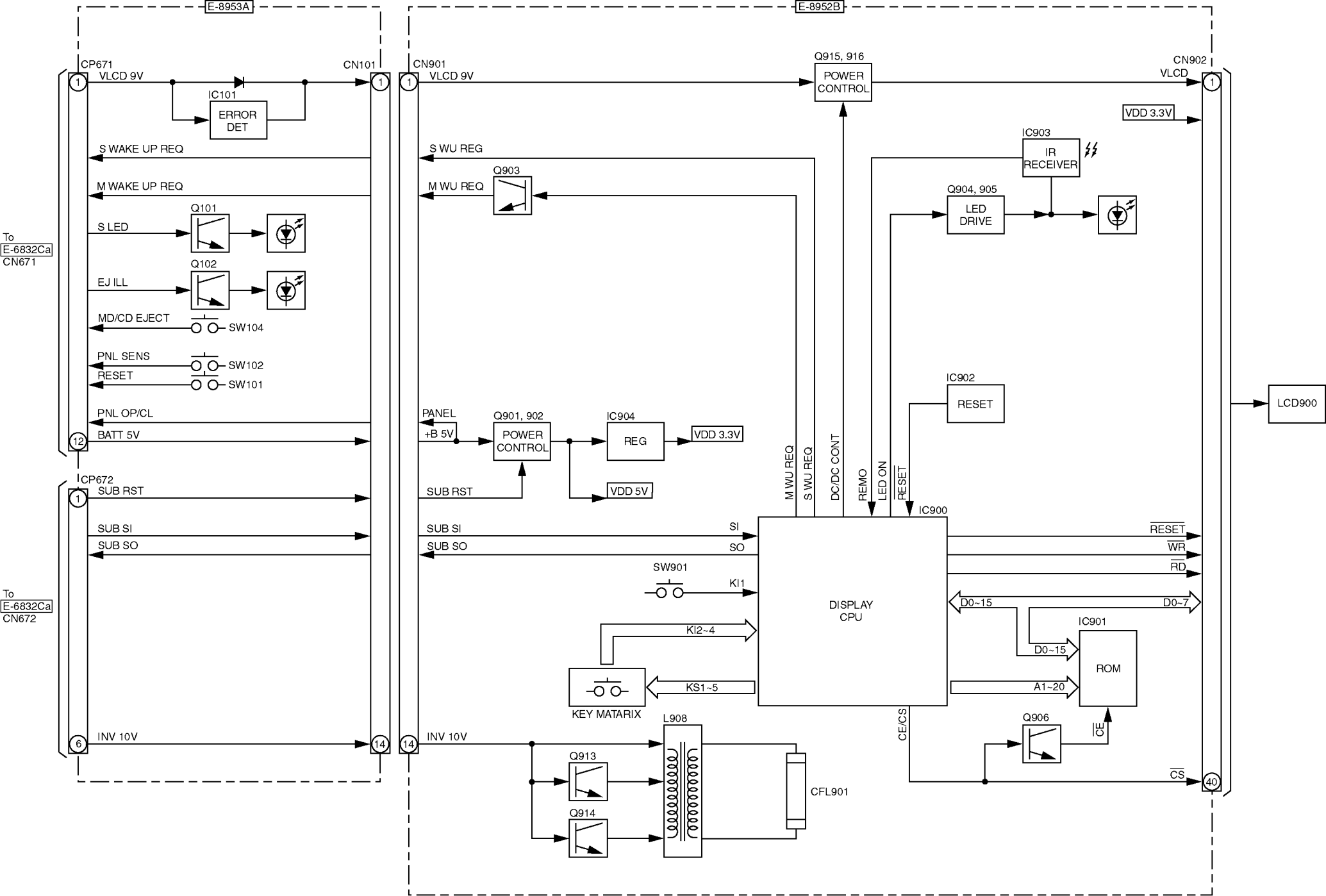
E-8953A
E-8952B
CP671
CN101
VLCD 9V
IC101
ERROR DET
S WAKE UP REQ
M WAKE UP REQ
Q101
S LED
Q102
EJ ILL
MD/CD EJECT
SW104
PNL SENS
SW102
RESET
SW101
PNL OP/CL
BATT 5V
To E-6832Ca CN671
CP672
SUB RST
SUB SI
SUB SO
To E-6832Ca CN672
INV 10V
CN901
VLCD 9V
Q915, 916
POWER CONTROL
CN902
VLCD
VDD 3.3V
IC903
IR RECEIVER
S WU REG
M WU REQ
Q903
Q904, 905
LED DRIVE
IC902
RESET
LCD900
PANEL
+B 5V
Q901, 902
POWER CONTROL
IC904
REG
VDD 3.3V
VDD 5V
SUB RST
M WU REQ
S WU REQ
DC/DC CONT
REMO
LED ON
RESET
IC900
SUB SI
SI
SUB SO
SO
SW901
KI1
KI2~4
KS1~5
KEY MATARIX
DISPLAY CPU
RESET
WR
RD
D0~15
D0~7
IC901
ROM
A1~20
CE/CS
Q906
CE
CS
INV 10V
L908
Q913
Q914
CFL901

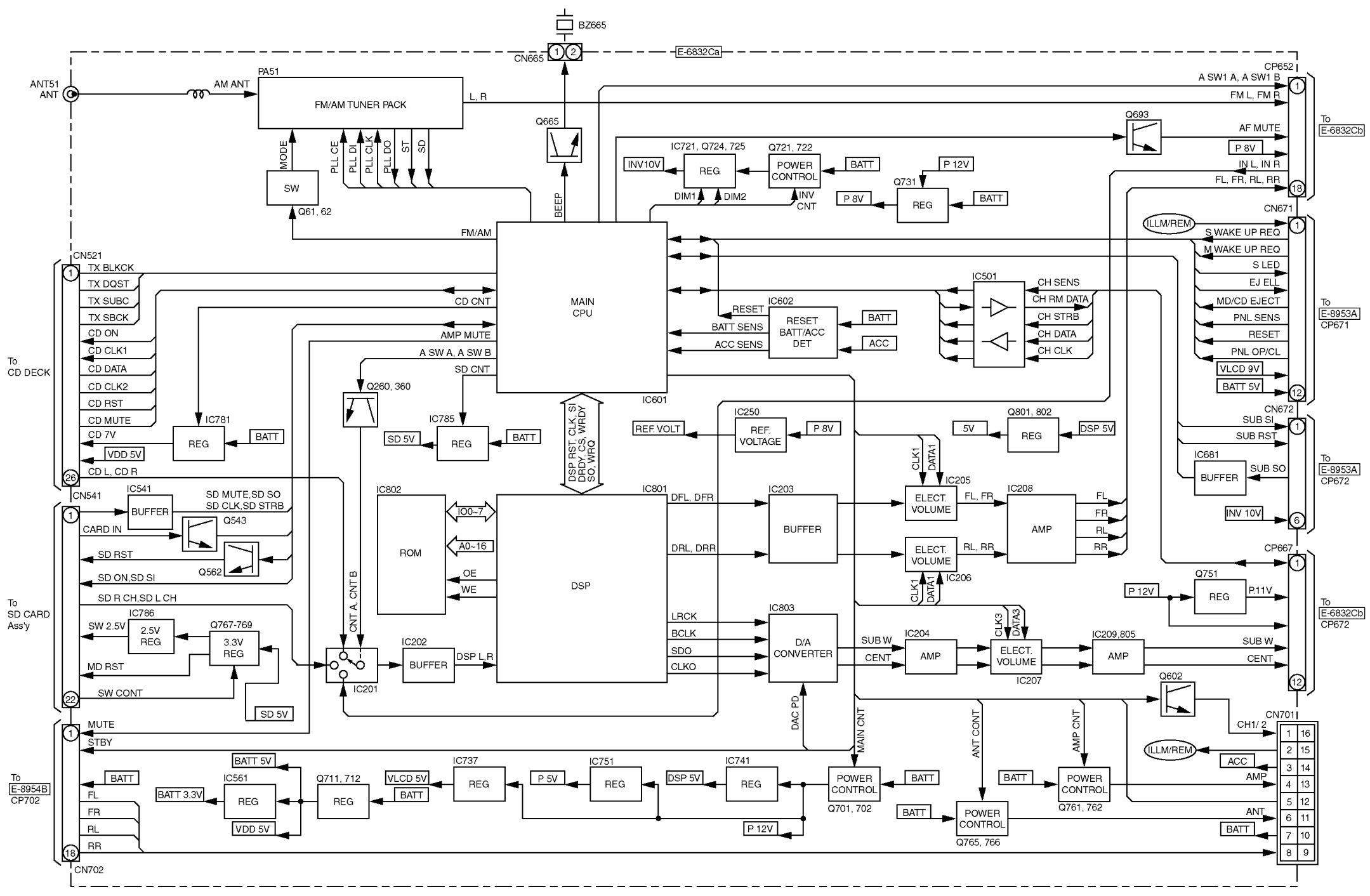
BZ665
CN665
E-6832Ca
ANT51
ANT
AM ANT
PA51
FM/AM TUNER PACK
L, R
MODE
SW
Q61, 62
PLL CE
PLL DI
PLL CLK
PLL DO
ST
SD
Q665
BEEP
FM/AM
MAIN CPU
IC601
IC721, Q724, 725
REG
INV10V
Q721, 722
POWER CONTROL
BATT
DIM1
DIM2
INV CNT
Q731
P 12V
P 8V
REG
BATT
Q693
CP652
A SW1 A, A SW1 B
FM L, FM R
AF MUTE
P 8V
IN L, IN R
FL, FR, RL, RR
To E-6832Cb
CN671
ILLM/REM
S WAKE UP REQ
M WAKE UP REQ
S LED
EJ ELL
MD/CD EJECT
PNL SENS
RESET
PNL OP/CL
VLCD 9V
BATT 5V
To E-8953A CP671
CN521
TX BLKCK
TX DQST
TX SUBC
TX SBCK
CD ON
CD CLK1
CD DATA
CD CLK2
CD RST
CD MUTE
CD 7V
VDD 5V
CD L, CD R
To CD DECK
CD CNT
AMP MUTE
A SW A, A SW B
SD CNT
RESET
BATT SENS
ACC SENS
IC602
RESET BATT/ACC DET
BATT
ACC
IC501
CH SENS
CH RM DATA
CH STRB
CH DATA
CH CLK
Q260, 360
IC781
REG
BATT
IC785
REG
SD 5V
BATT
DSP RST, CLK, SI
DRDY, CS, WRDY
SO, WRQ
REF. VOLT
IC250
REF. VOLTAGE
P 8V
5V
Q801, 802
REG
DSP 5V
CN672
SUB SI
SUB RST
IC681
BUFFER
SUB SO
To E-8953A CP672
INV 10V
CN541
IC541
BUFFER
SD MUTE,SD SO
SD CLK,SD STRB
CARD IN
Q543
SD RST
Q562
SD ON,SD SI
SD R CH,SD L CH
To SD CARD Ass'y
IC802
ROM
IO0~7
A0~16
OE
WE
DSP
IC801
DFL, DFR
DRL, DRR
LRCK
BCLK
SDO
CLKO
IC203
BUFFER
IC205
ELECT. VOLUME
FL, FR
IC208
AMP
FL
FR
RL
RR
ELECT. VOLUME
RL, RR
IC206
CLK1
DATA1
CP667
Q751
REG
P 12V
P.11V
To E-6832Cb CP672
IC786
SW 2.5V
2.5V REG
Q767-769
3.3V REG
MD RST
SW CONT
SD 5V
CNT A, CNT B
IC201
IC202
BUFFER
DSP L,R
IC803
D/A CONVERTER
SUB W
CENT
IC204
AMP
CLK3
DATA3
ELECT. VOLUME
IC207
IC209,805
AMP
SUB W
CENT
Q602
DAC PD
MAIN CNT
ANT CONT
AMP CNT
CN701
CH1/ 2
ILLM/REM
ACC
AMP
ANT
BATT
MUTE
STBY
To E-8954B CP702
BATT
FL
FR
RL
RR
CN702
BATT 5V
BATT 3.3V
IC561
REG
VDD 5V
Q711, 712
REG
VLCD 5V
BATT
IC737
REG
P 5V
IC751
REG
DSP 5V
IC741
REG
P 12V
POWER CONTROL
Q701, 702
BATT
POWER CONTROL
Q765, 766
BATT
POWER CONTROL
Q761, 762
BATT
BATT

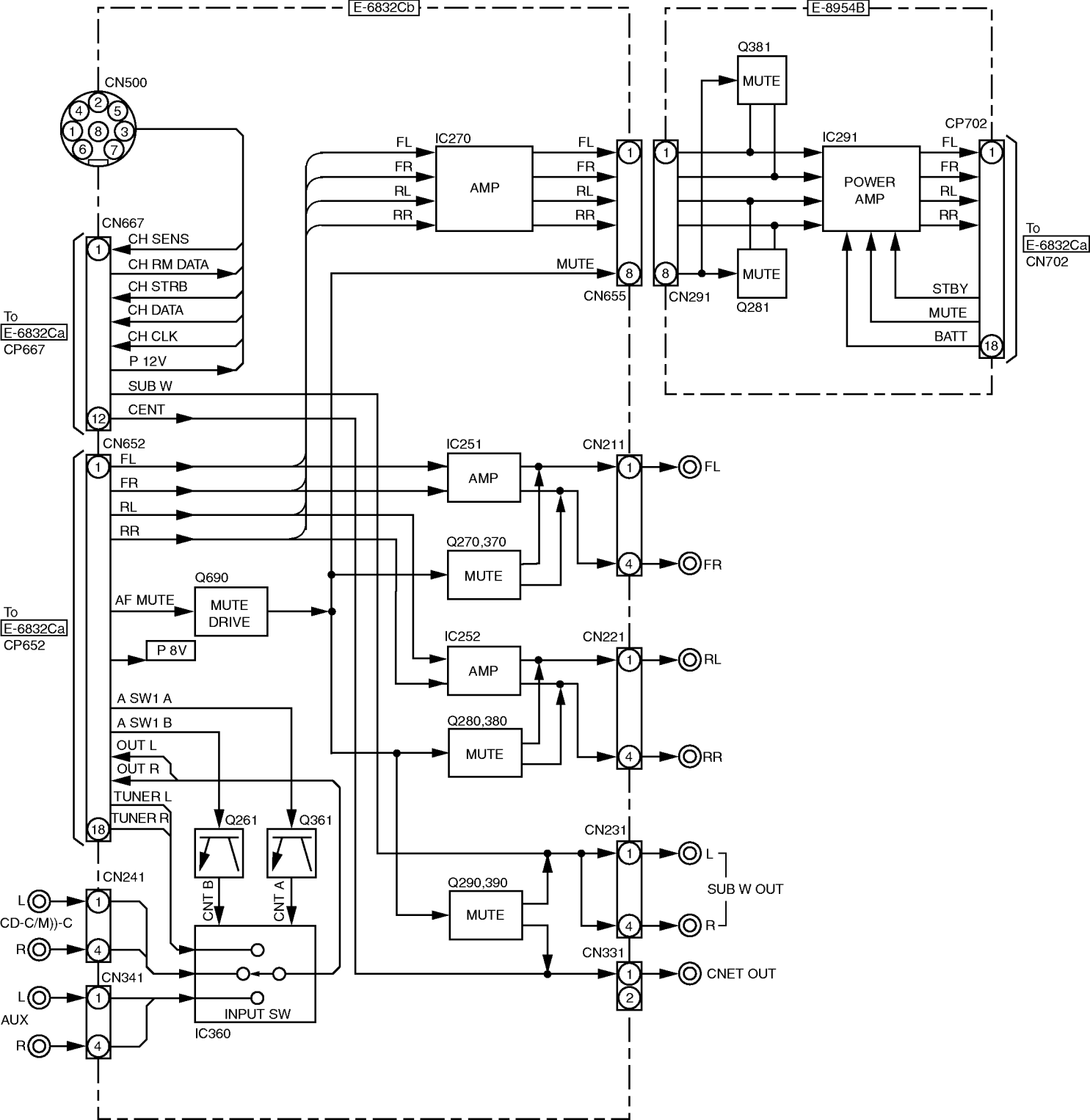
E-6832Cb
E-8954B
CN500
CN667
CH SENS
CH RM DATA
CH STRB
CH DATA
CH CLK
P 12V
SUB W
CENT
To
E-6832Ca
CP667
CN652
FL
FR
RL
RR
AF MUTE
Q690
MUTE
DRIVE
P 8V
To
E-6832Ca
CP652
A SW1 A
A SW1 B
OUT L
OUT R
TUNER L
TUNER R
Q261
Q361
CNT B
CNT A
INPUT SW
IC360
CN241
L
CD-C/M))-C
R
CN341
L
AUX
R
IC270
AMP
FL
FR
RL
RR
MUTE
CN655
IC251
AMP
Q270,370
MUTE
IC252
AMP
Q280,380
MUTE
Q290,390
MUTE
CN211
CN221
CN231
CN331
FL
FR
RL
RR
L
R
SUB W OUT
CNET OUT
Q381
MUTE
MUTE
Q281
CN291
IC291
POWER
AMP
CP702
FL
FR
RL
RR
STBY
MUTE
BATT
To
E-6832Ca
CN702

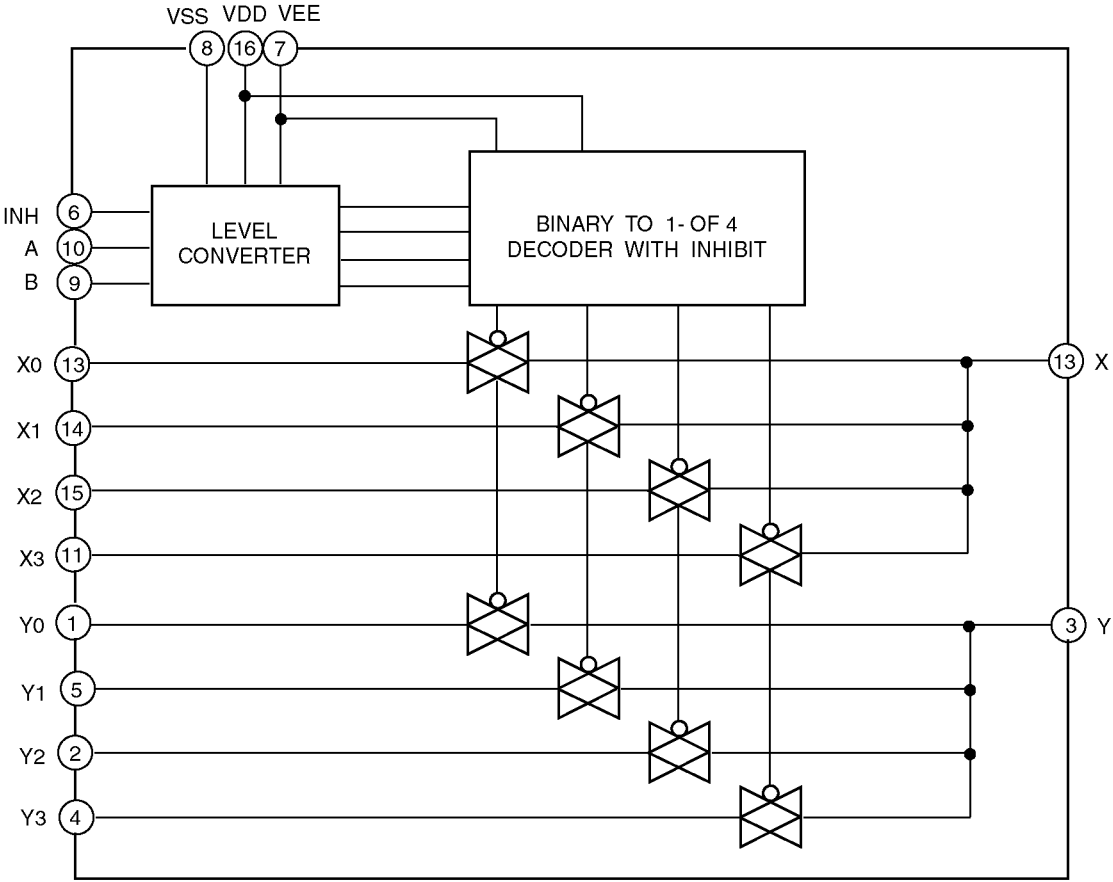
VSS
VDD
VEE
8
16
7
INH
A
B
6
10
9
LEVEL CONVERTER
BINARY TO 1-OF 4 DECODER WITH INHIBIT
X0
X1
X2
X3
Y0
Y1
Y2
Y3
13
14
15
11
1
5
2
4
13
X
3
Y

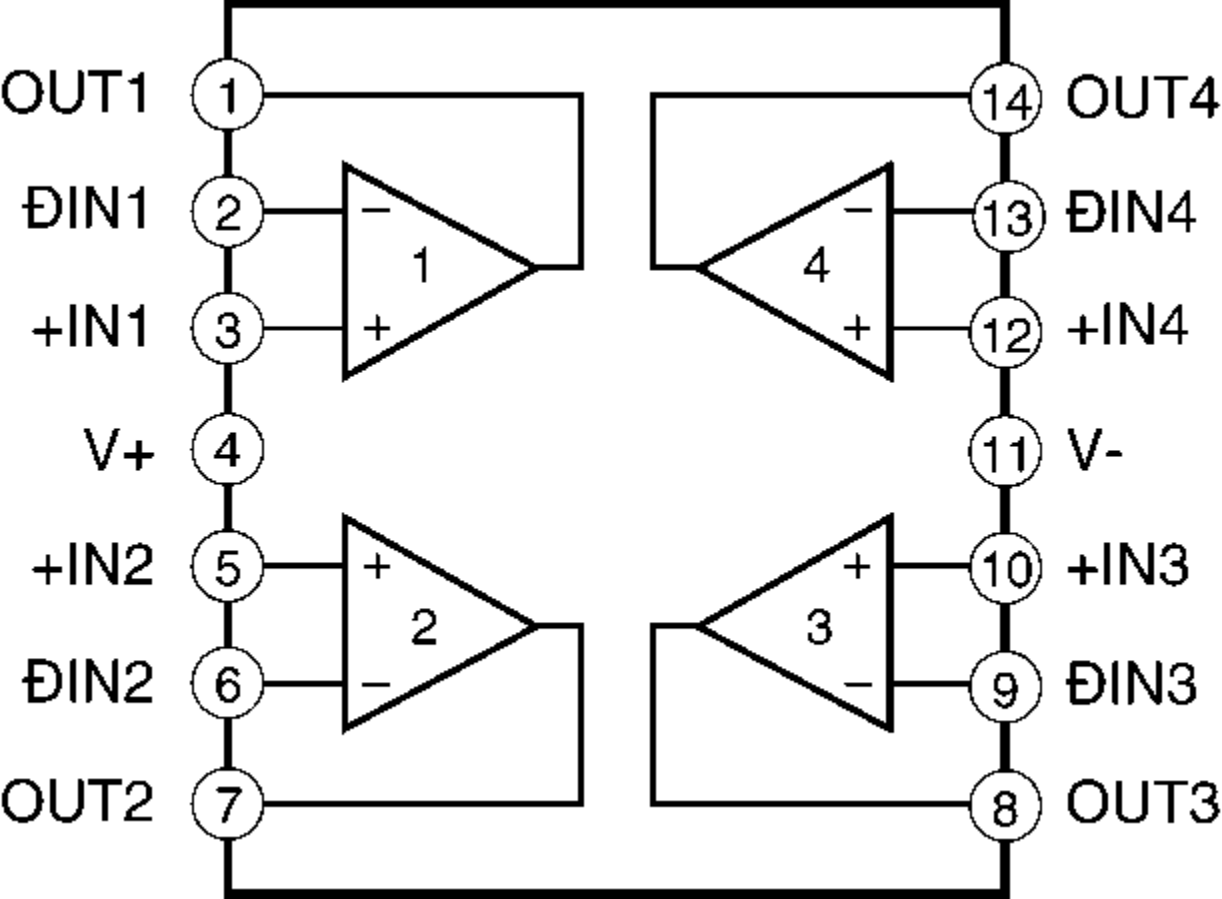
OUT1
1
ÐIN1
2
+IN1
3
V+
4
+IN2
5
ÐIN2
6
OUT2
7
14
OUT4
13
ÐIN4
12
+IN4
11
V-
10
+IN3
9
ÐIN3
8
OUT3
1
2
3
4

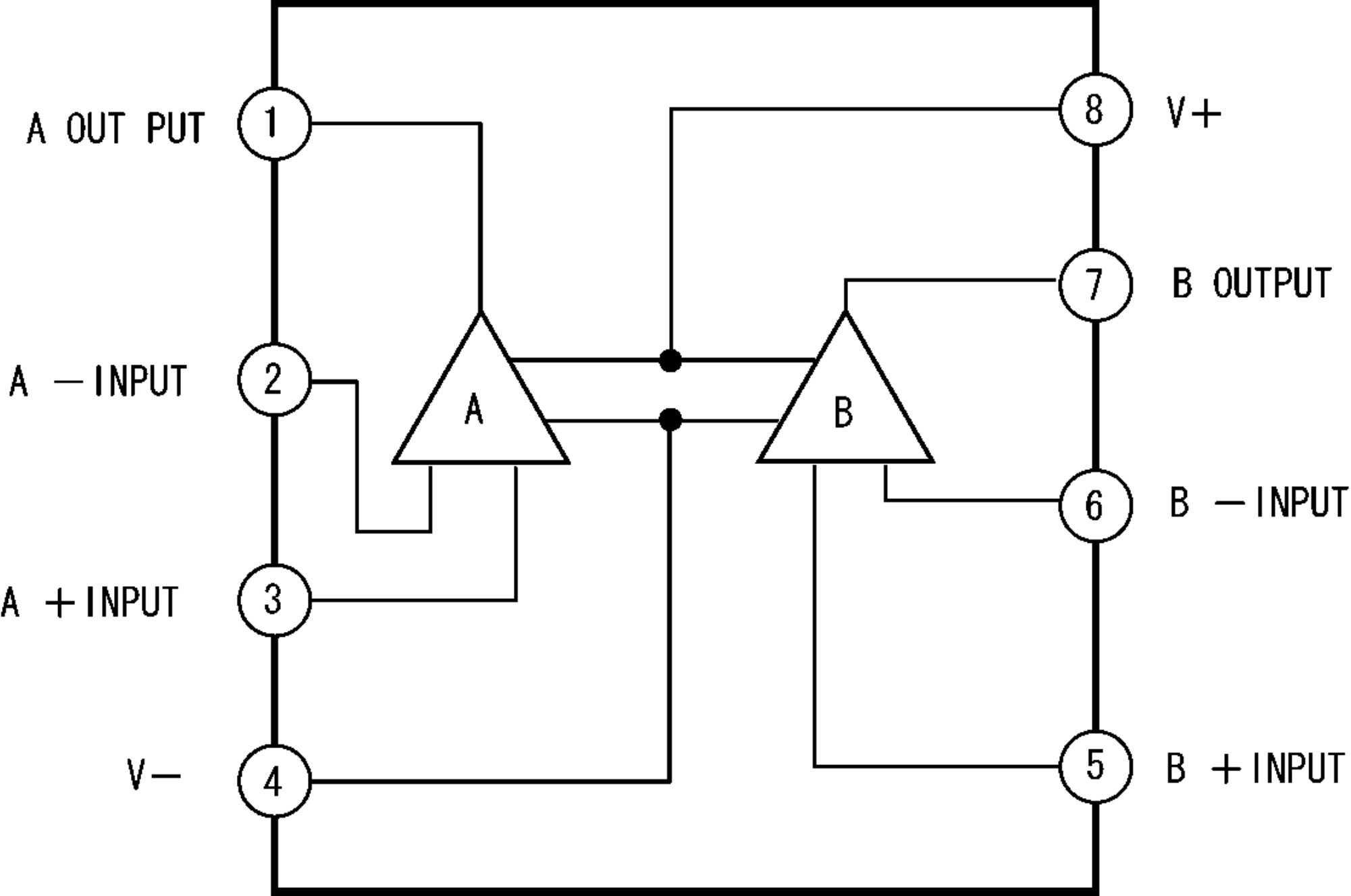
A OUT PUT
1
A −INPUT
2
A +INPUT
3
V−
4
8
V+
7
B OUTPUT
6
B −INPUT
5
B +INPUT
A
B

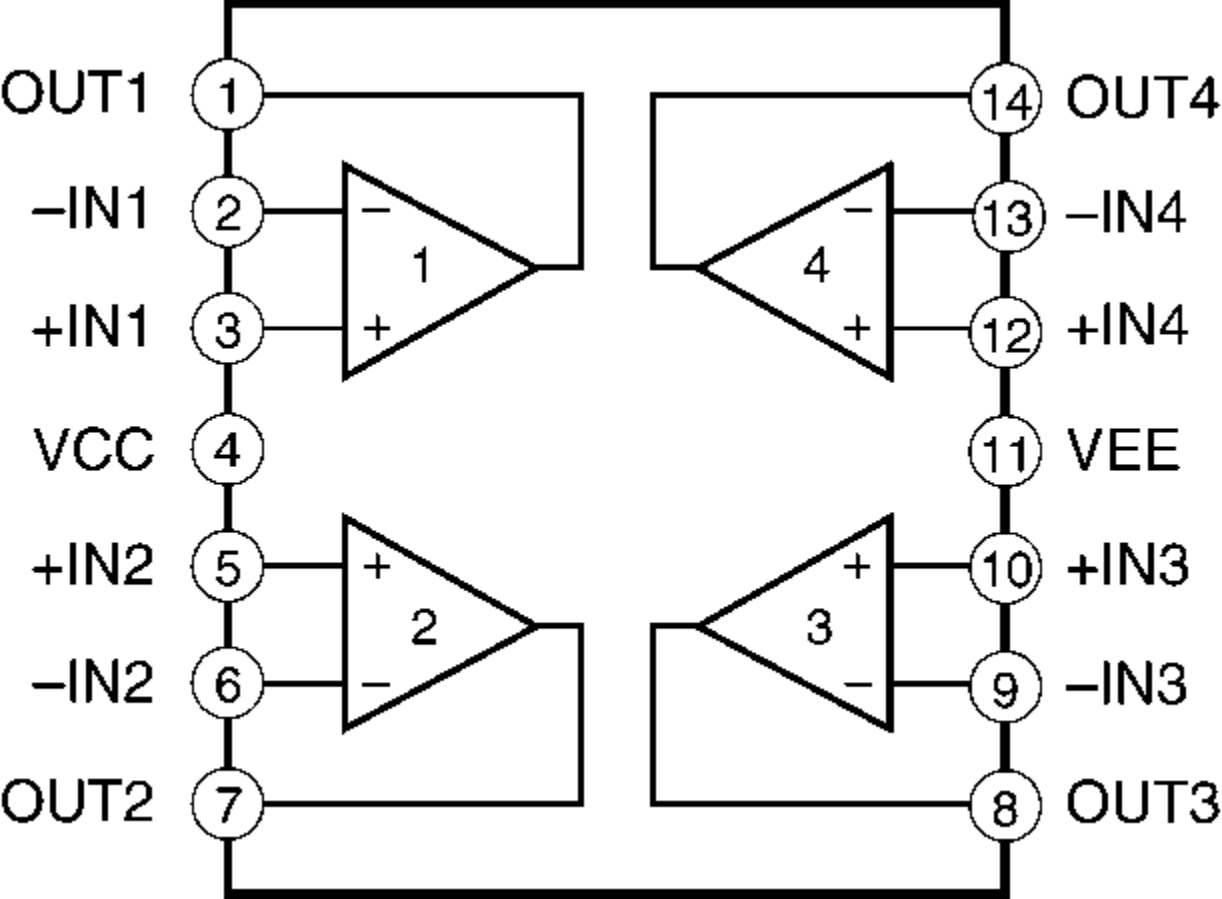
OUT1
1
–IN1
2
+IN1
3
VCC
4
+IN2
5
–IN2
6
OUT2
7
14
OUT4
13
–IN4
12
+IN4
11
VEE
10
+IN3
9
–IN3
8
OUT3
1
2
3
4

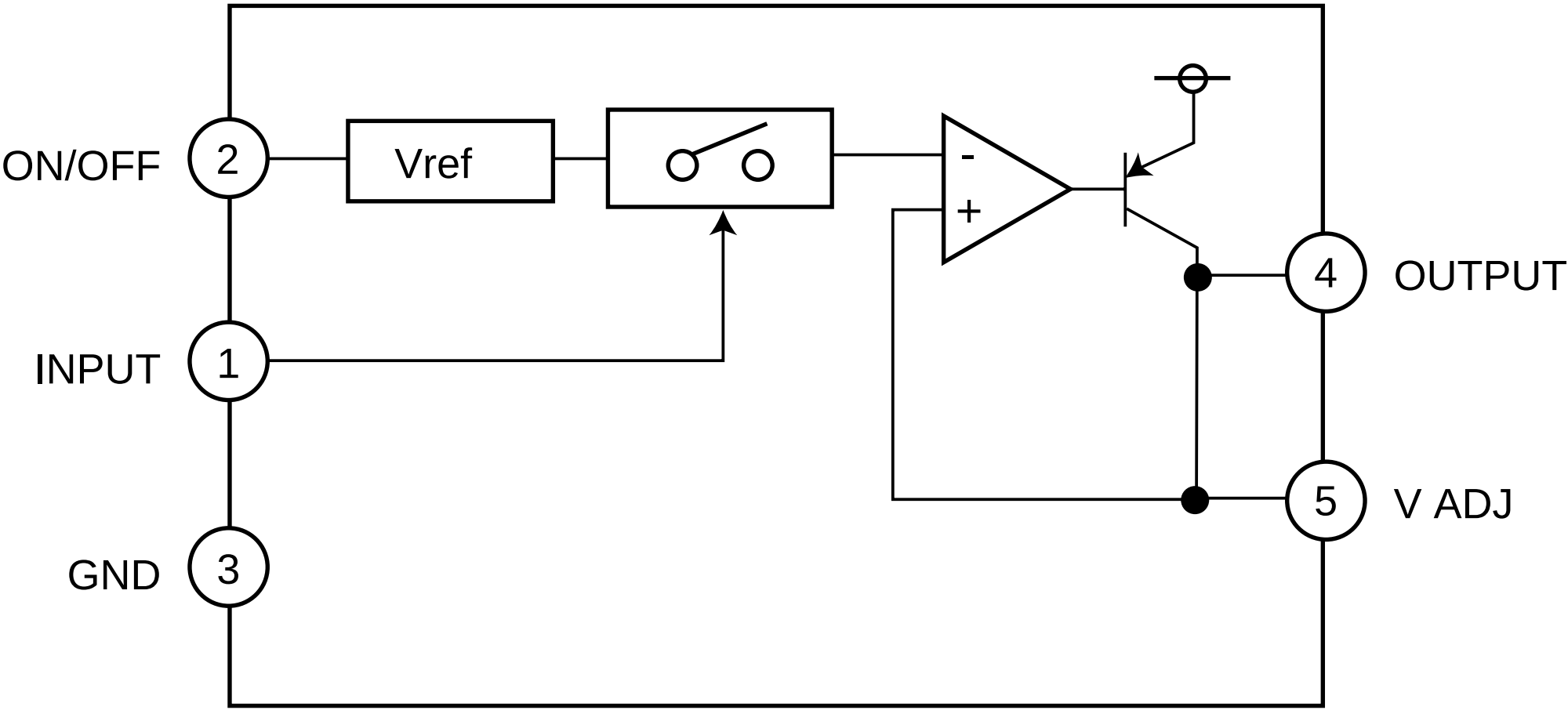
ON/OFF
2
Vref
-
+
4
OUTPUT
INPUT
1
5
V ADJ
GND
3

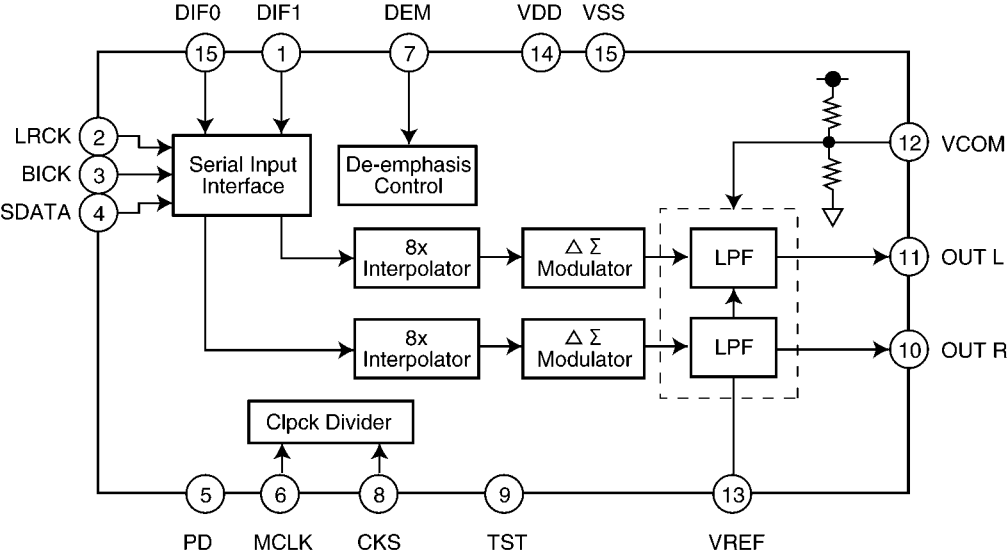
DIF0
DIF1
DEM
VDD
VSS
15
1
7
14
15
LRCK
BICK
SDATA
2
3
4
Serial Input Interface
De-emphasis Control
12
VCOM
8x Interpolator
Δ Σ Modulator
LPF
11
OUT L
8x Interpolator
Δ Σ Modulator
LPF
10
OUT R
Clpck Divider
5
6
8
9
13
PD
MCLK
CKS
TST
VREF

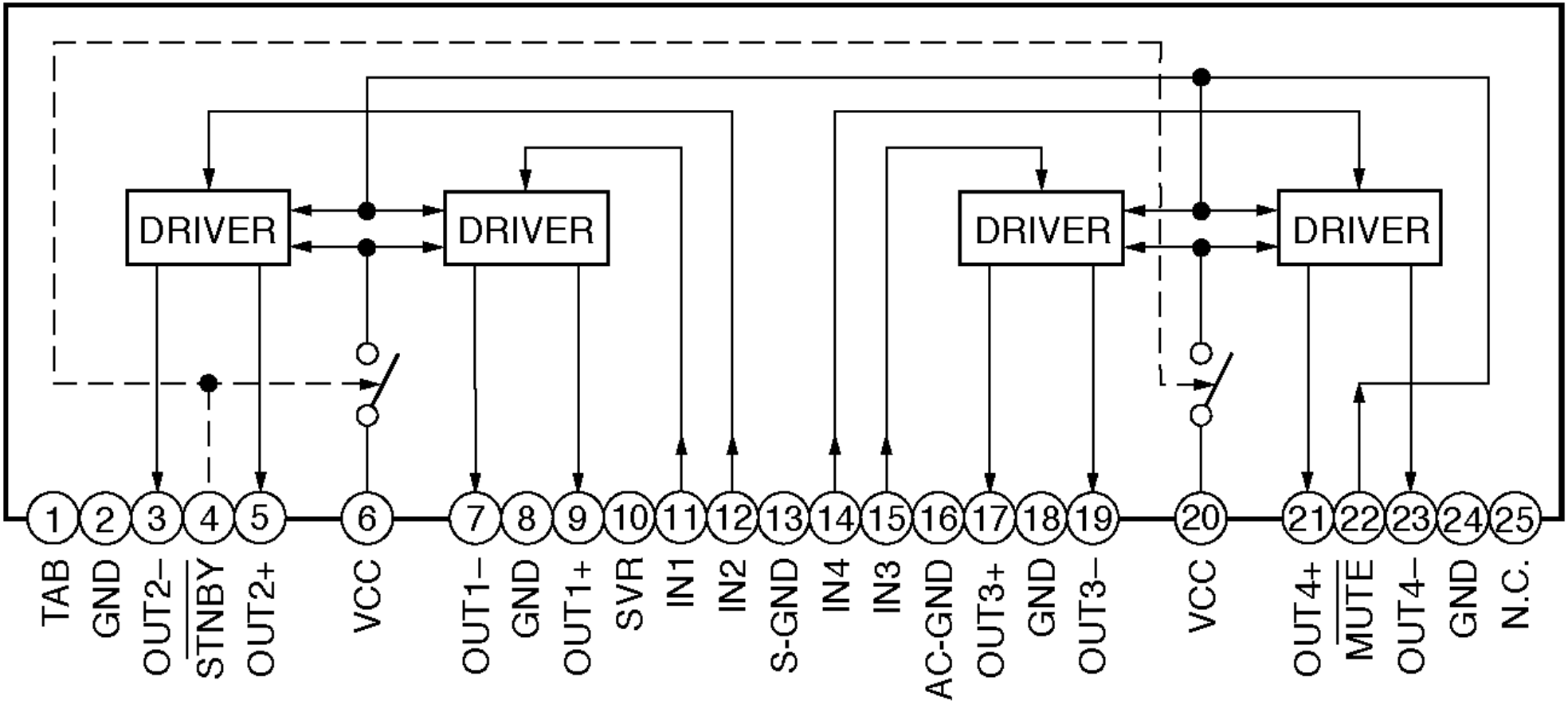
DRIVER
DRIVER
DRIVER
DRIVER
1 TAB
2 GND
3 OUT2–
4 STNBY
5 OUT2+
6 VCC
7 OUT1–
8 GND
9 OUT1+
10 SVR
11 IN1
12 IN2
13 S-GND
14 IN4
15 IN3
16 AC-GND
17 OUT3+
18 GND
19 OUT3–
20 VCC
21 OUT4+
22 MUTE
23 OUT4–
24 GND
25 N.C.

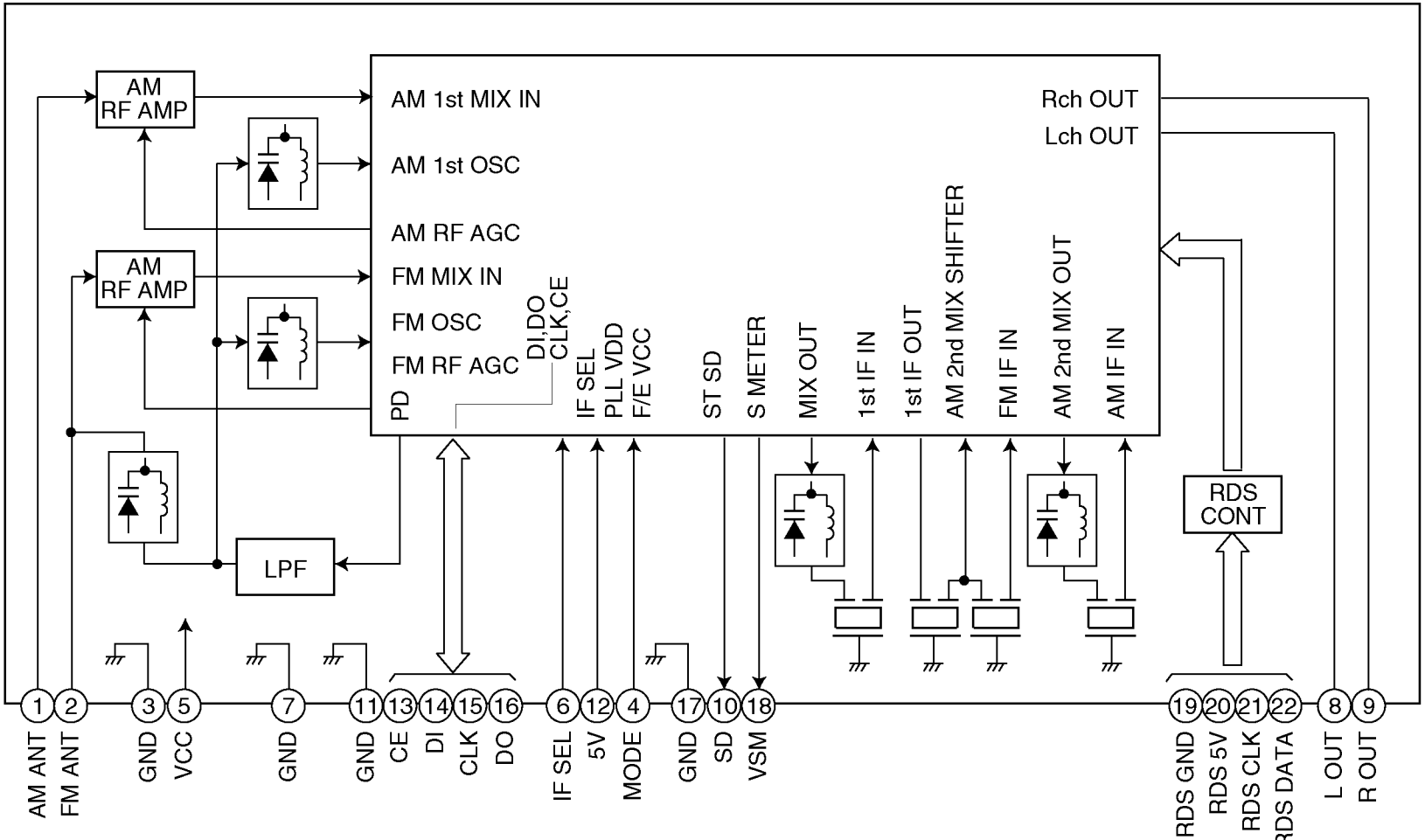
AM RF AMP
AM RF AMP
LPF
AM 1st MIX IN
AM 1st OSC
AM RF AGC
FM MIX IN
FM OSC
FM RF AGC
PD
DI,DO
CLK,CE
IF SEL
PLL VDD
F/E VCC
ST SD
S METER
MIX OUT
1st IF IN
1st IF OUT
AM 2nd MIX SHIFTER
FM IF IN
AM 2nd MIX OUT
AM IF IN
Rch OUT
Lch OUT
RDS CONT
1 AM ANT
2 FM ANT
3 GND
5 VCC
7 GND
11 GND
13 CE
14 DI
15 CLK
16 DO
6 IF SEL
12 5V
4 MODE
17 GND
10 SD
18 VSM
19 RDS GND
20 RDS 5V
21 RDS CLK
22 RDS DATA
8 L OUT
9 R OUT

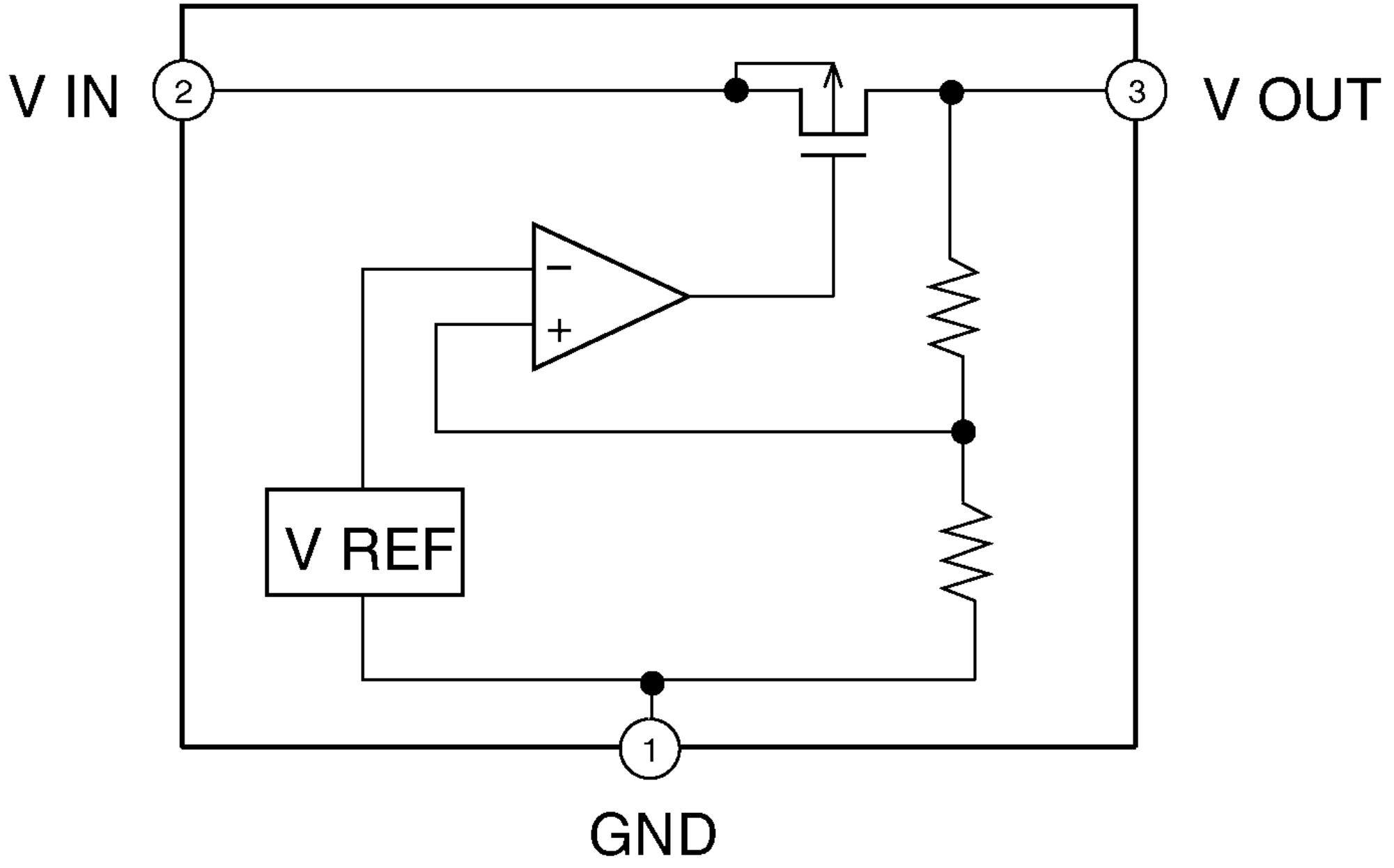
V IN
2
3
V OUT
−
+
V REF
1
GND

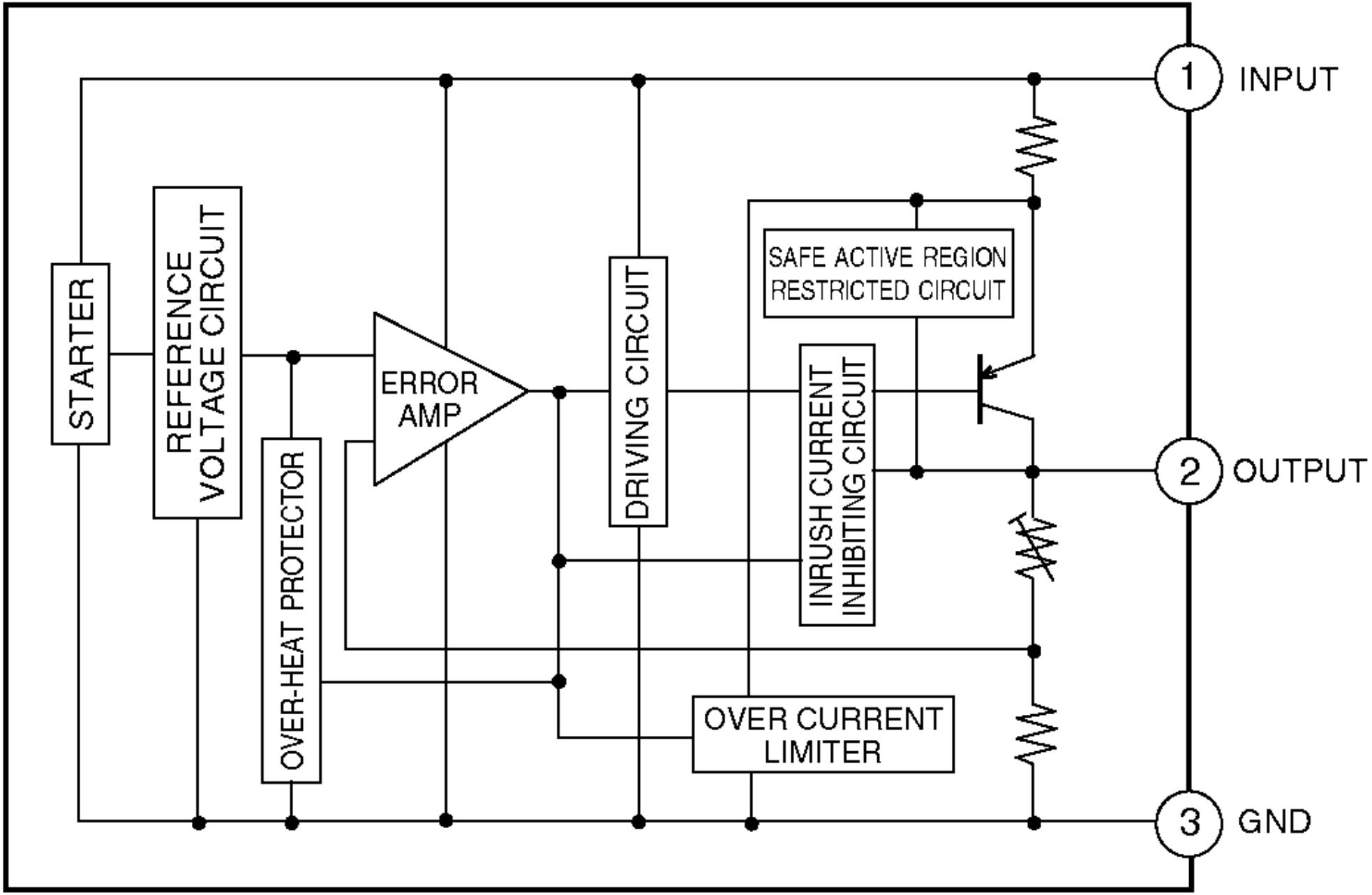
STARTER
REFERENCE VOLTAGE CIRCUIT
OVER-HEAT PROTECTOR
ERROR AMP
DRIVING CIRCUIT
SAFE ACTIVE REGION RESTRICTED CIRCUIT
INRUSH CURRENT INHIBITING CIRCUIT
OVER CURRENT LIMITER
1
INPUT
2
OUTPUT
3
GND

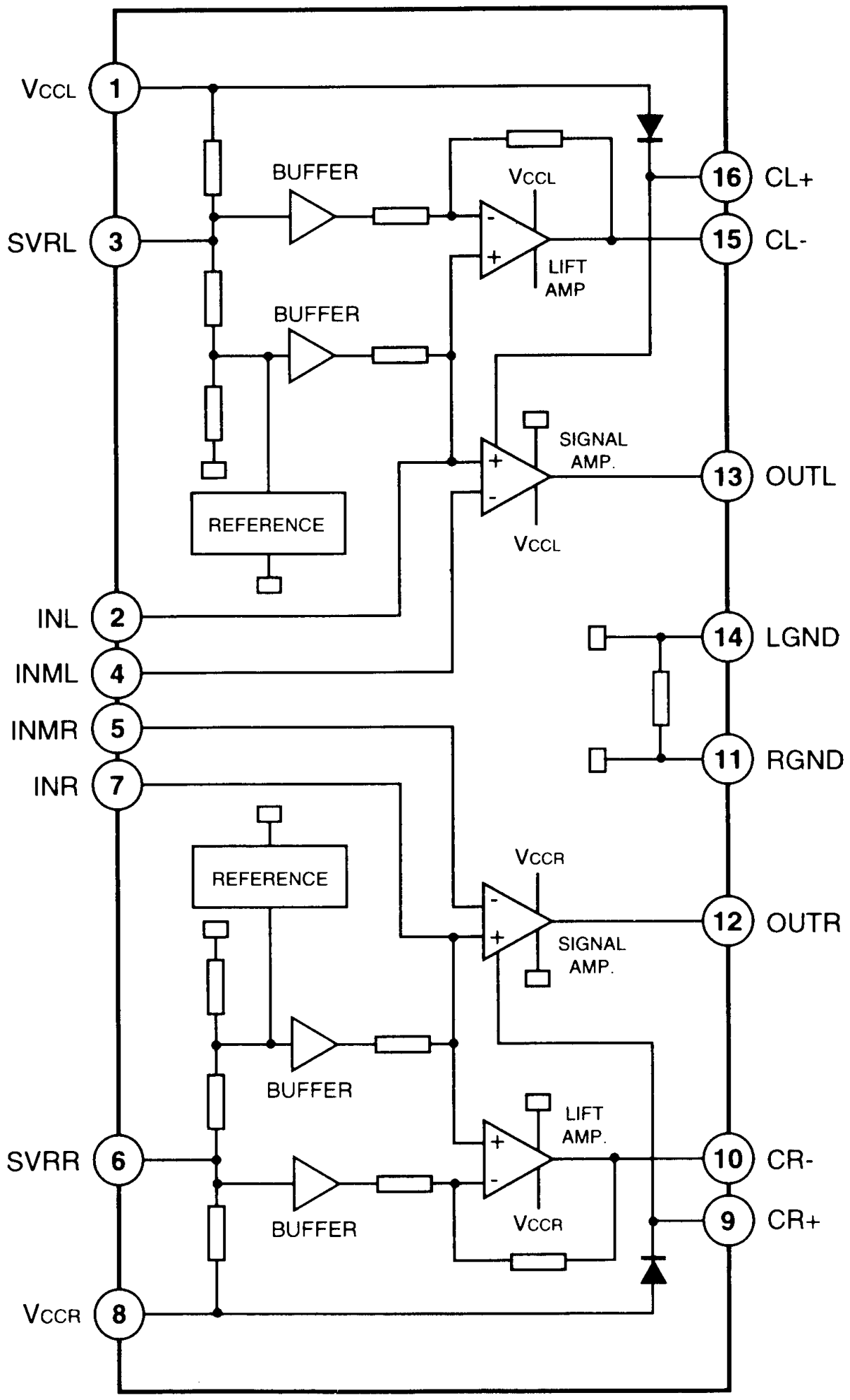
VCCL
1
SVRL
3
INL
2
INML
4
INMR
5
INR
7
SVRR
6
VCCR
8
BUFFER
BUFFER
VCCL
LIFT AMP
SIGNAL AMP.
VCCL
REFERENCE
16
CL+
15
CL-
13
OUTL
14
LGND
11
RGND
REFERENCE
VCCR
SIGNAL AMP.
12
OUTR
BUFFER
LIFT AMP.
BUFFER
VCCR
10
CR-
9
CR+

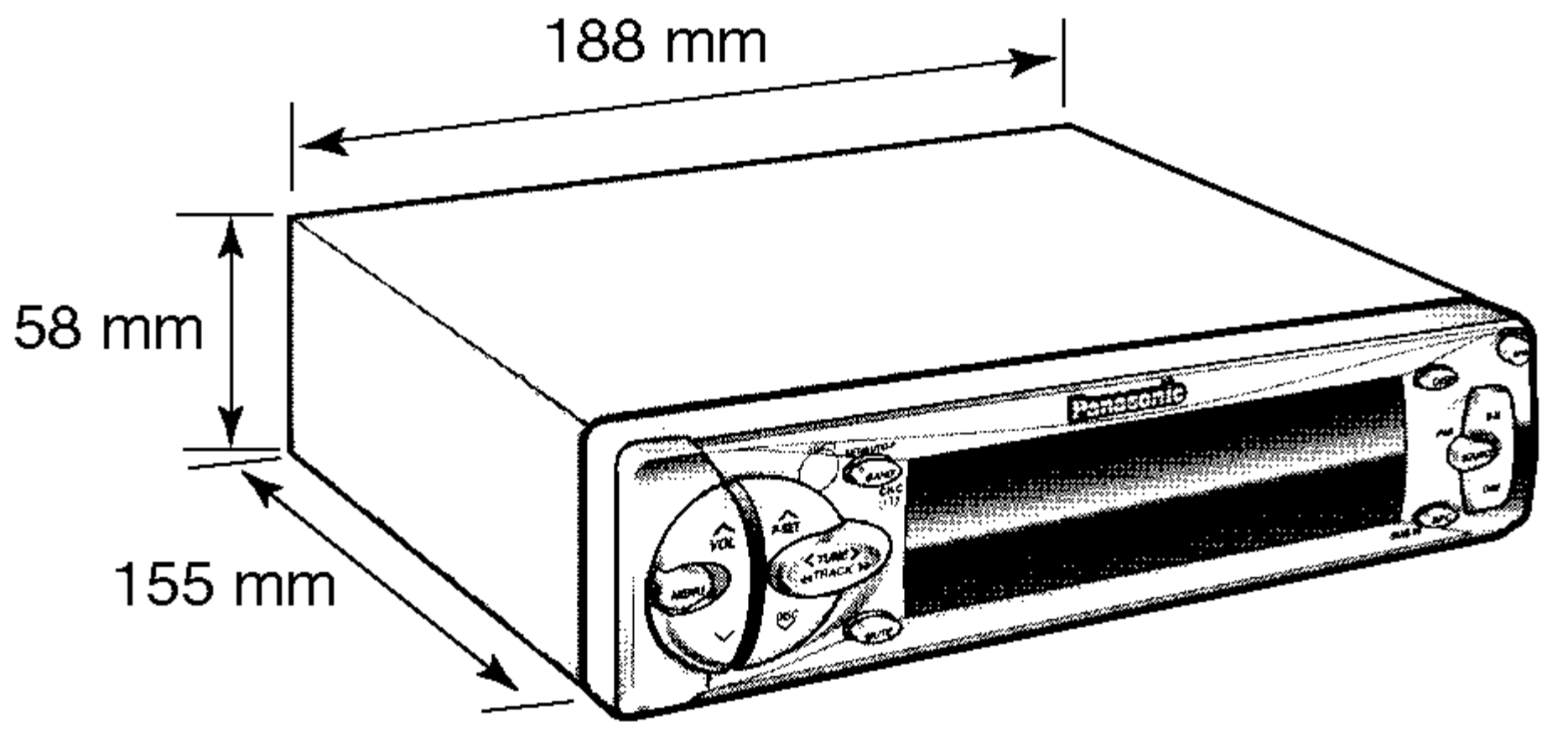
188 mm
58 mm
155 mm
Panasonic
VOL
BAND
TUNE
TRACK
MUTE

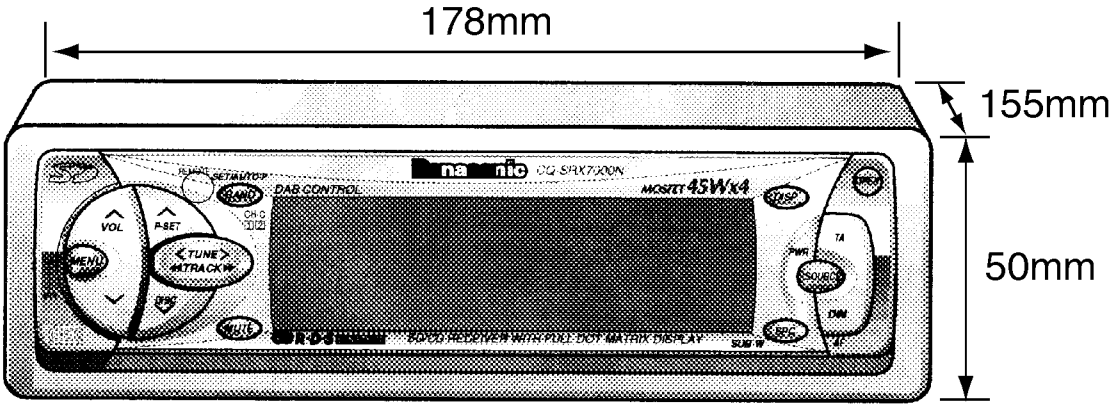
178mm
155mm
50mm
panasonic
CQ-SRX7000N
MOSFET 45Wx4
DAB CONTROL
SETAUTO P
BAND
VOL
P-SET
TUNE
TRACK
MENU
MUTE
DISP
TA
PWR
SOURCE
DIM
EQ
SUB W
RDS RECEIVER WITH FULL DOT MATRIX DISPLAY

1. Press the OPEN Button to open the Escutcheon Ass'y.

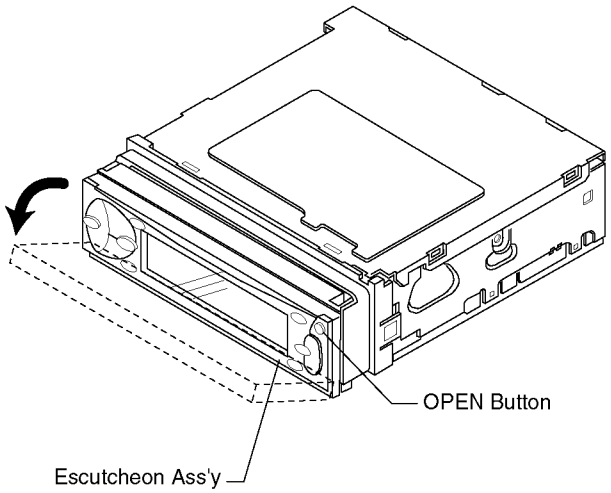

2. Slide the Escutcheon Ass'y to the right side, and pull out the left side of the Escutcheon Ass'y.

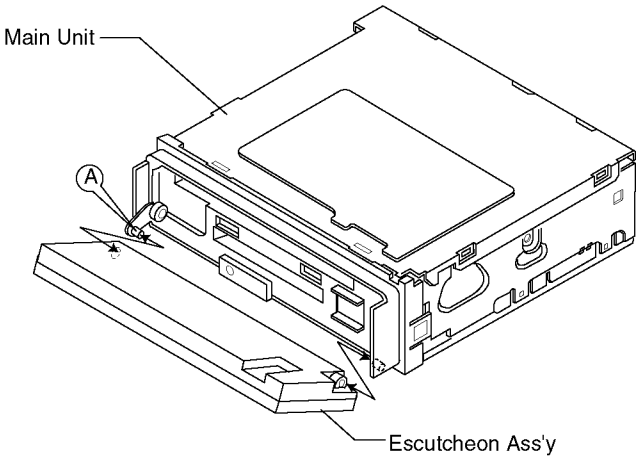

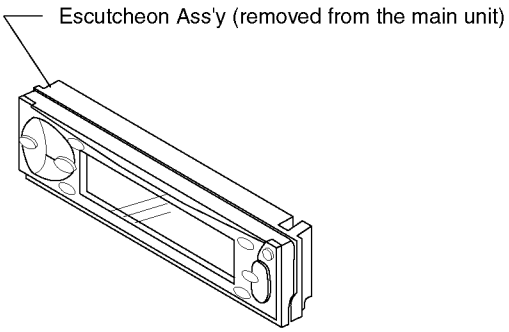

3. Remove 4 screws and detach the Main Panel Ass'y from the Escutcheon Panel.

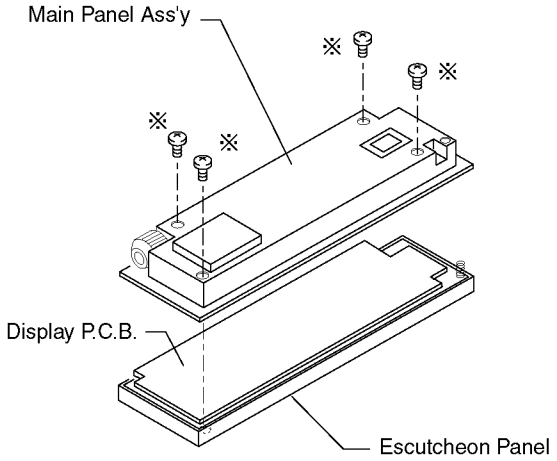

4. Detach the Main Panel Case from the Escutcheon Cover.

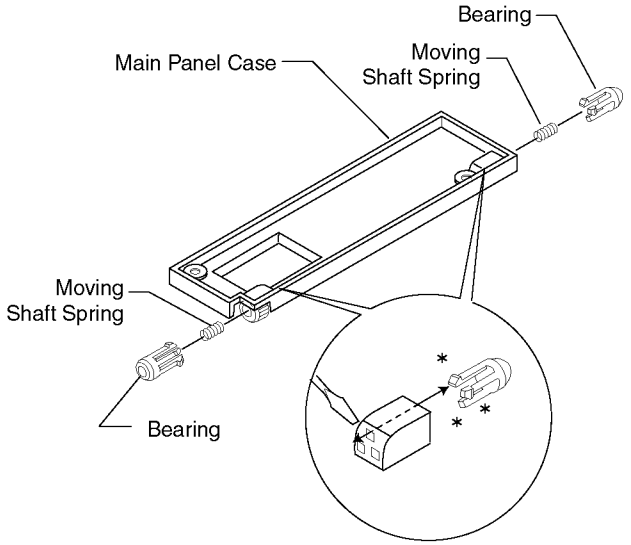

Note: Slightly unhook 3 nails of the bearing by screwdriver and remove the bearings.

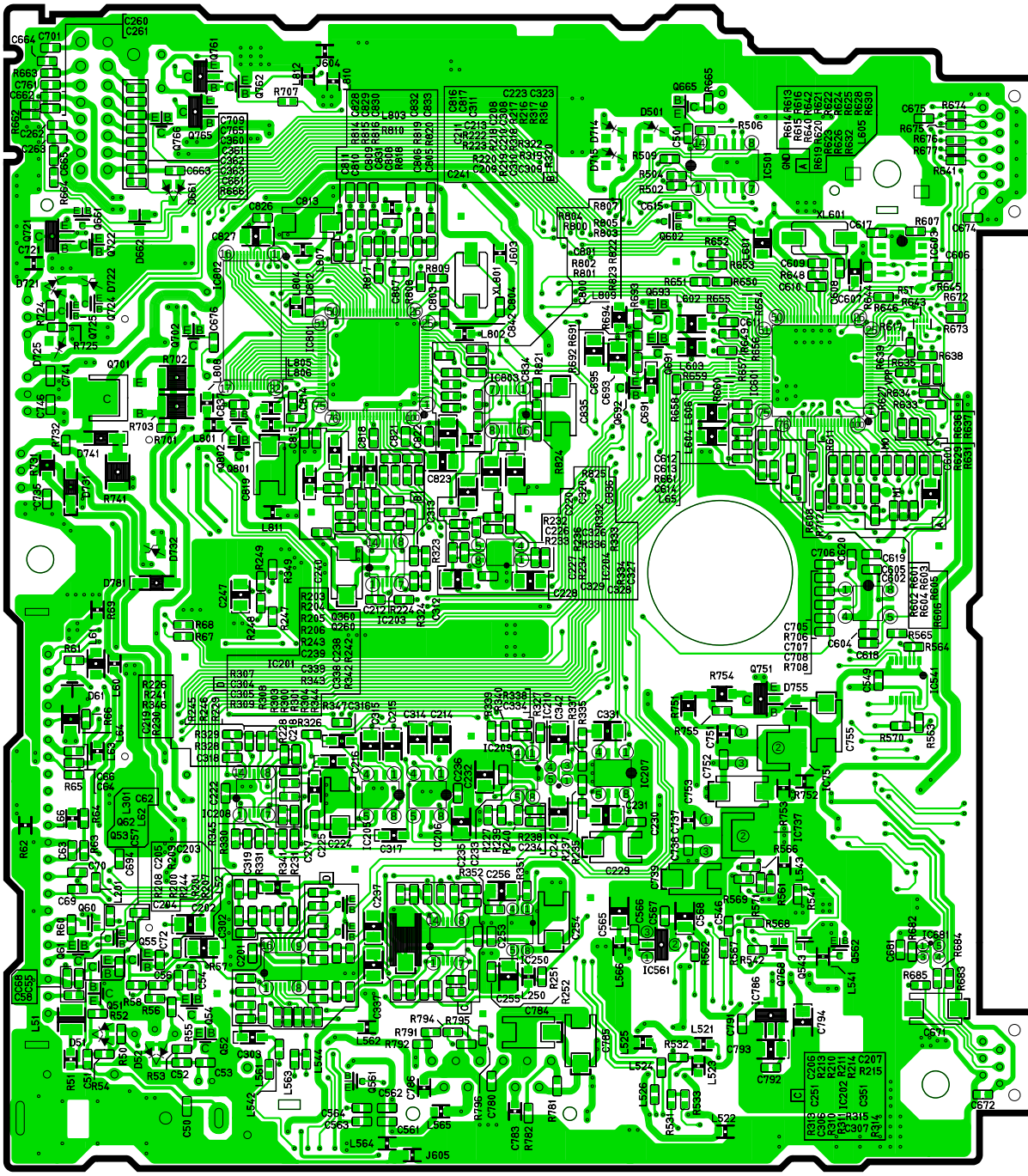

[E-6832Ca][Bottom View]

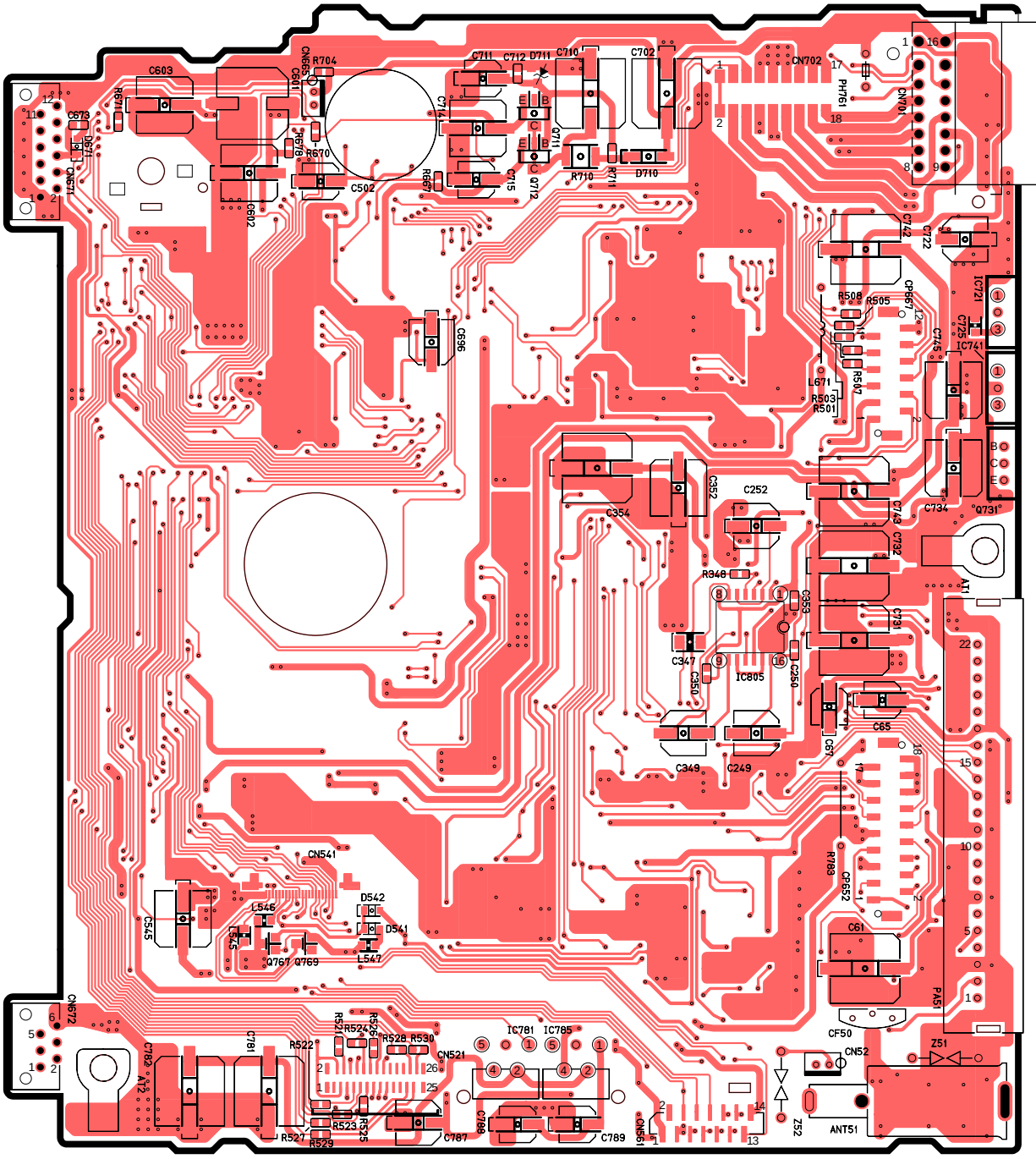

[E-6832Ca][Top View]

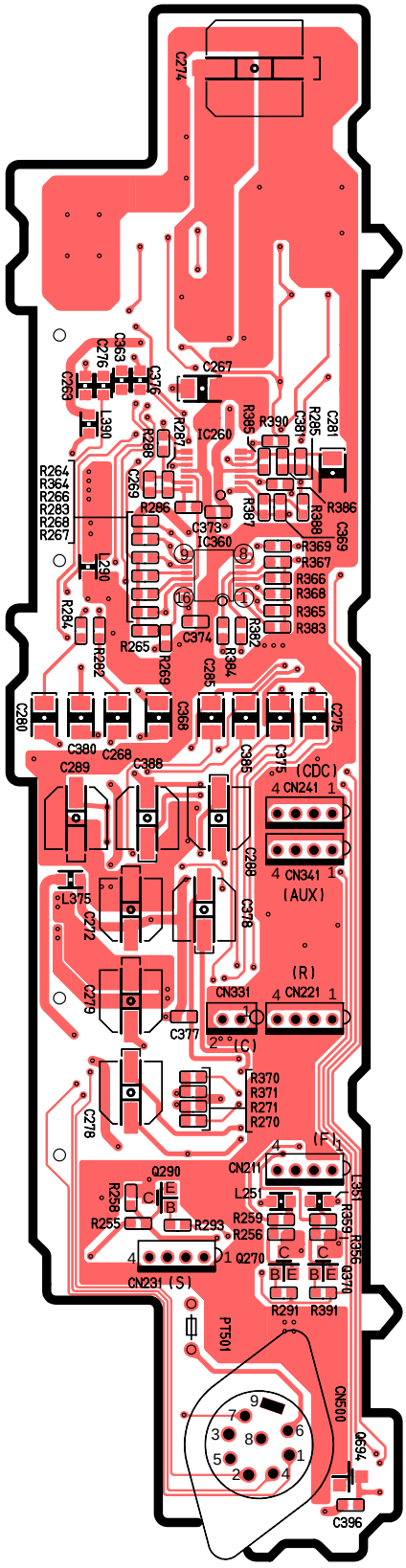

[E-6832Cb][Top View]

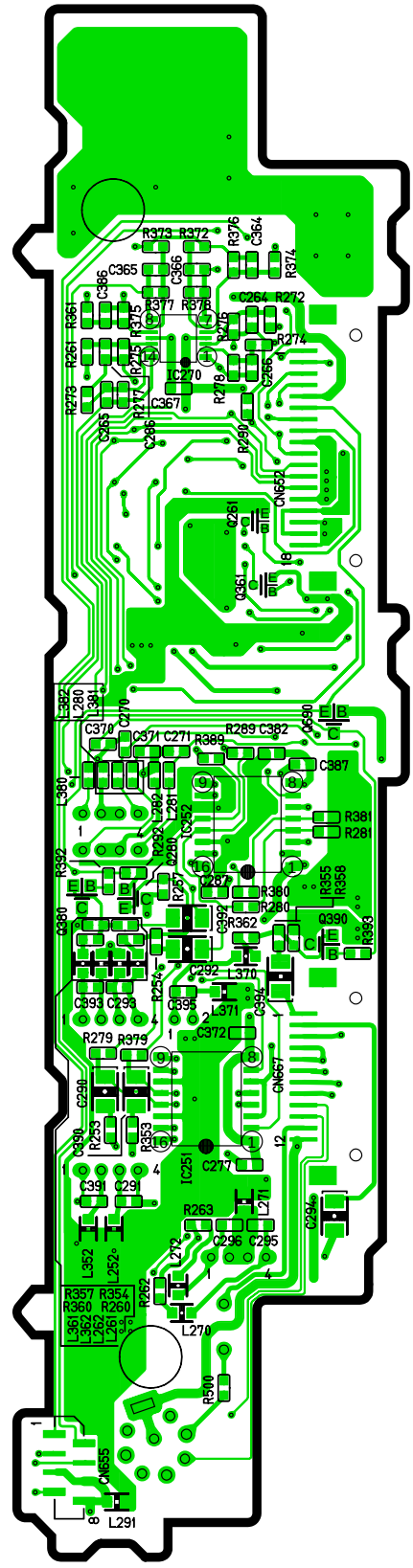

[E-6832Cb][Bottom View]

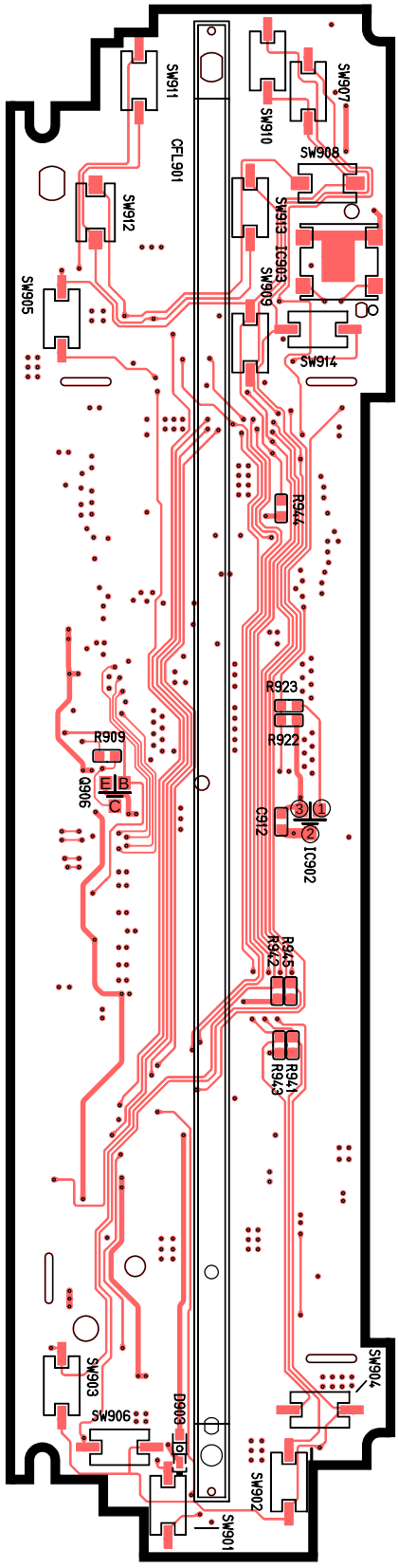

[E-8952B][Top View]

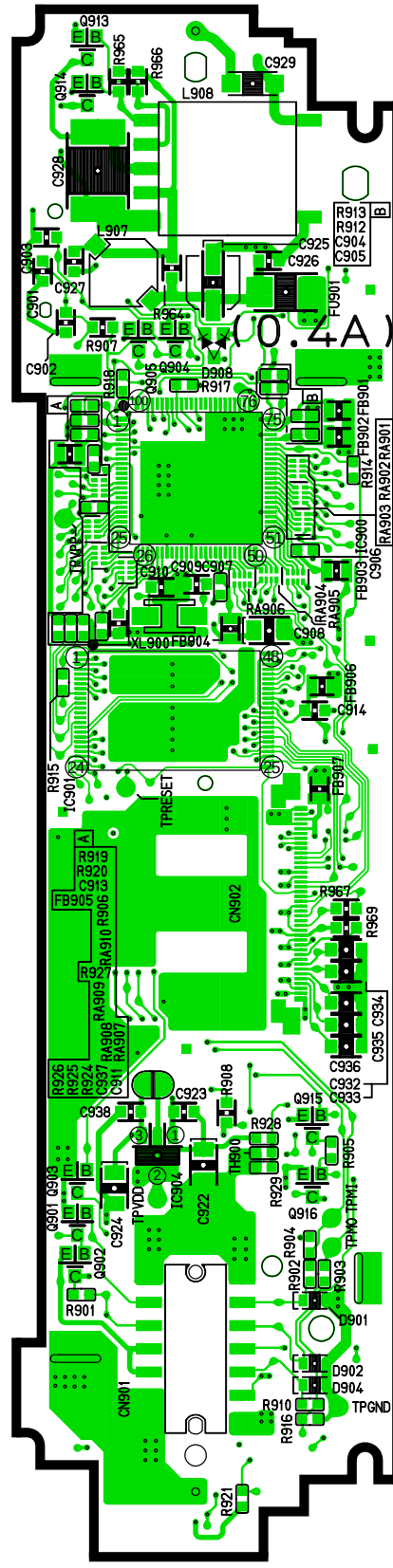

[E-8952B][Bottom View]

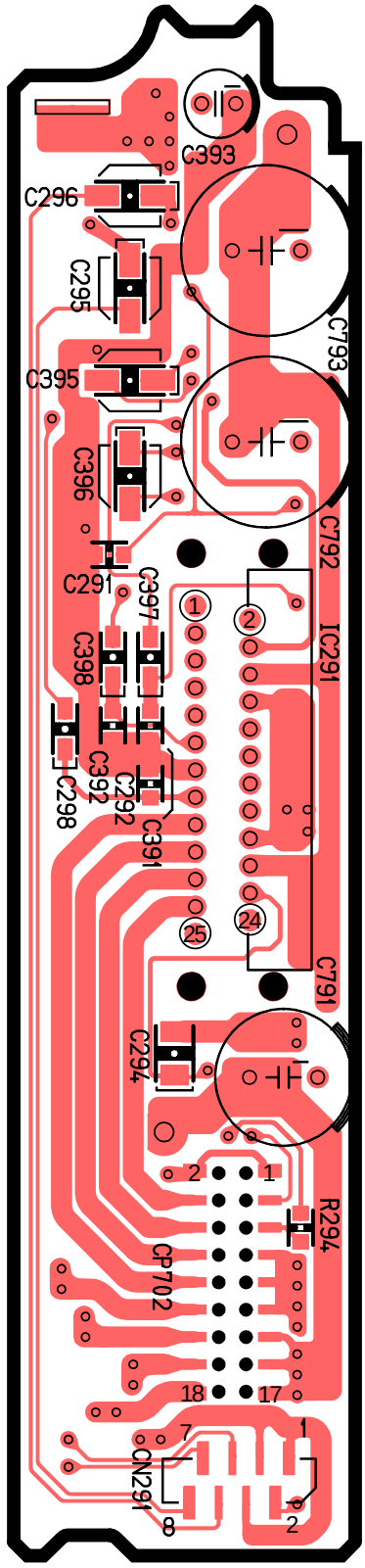

[E-8954B][Top View]

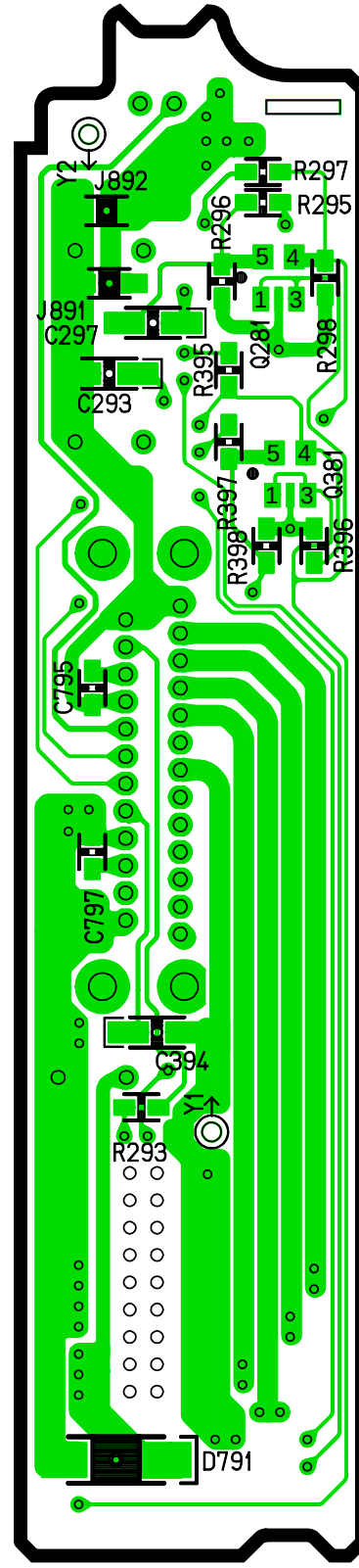

[E-8954B][Bottom View]

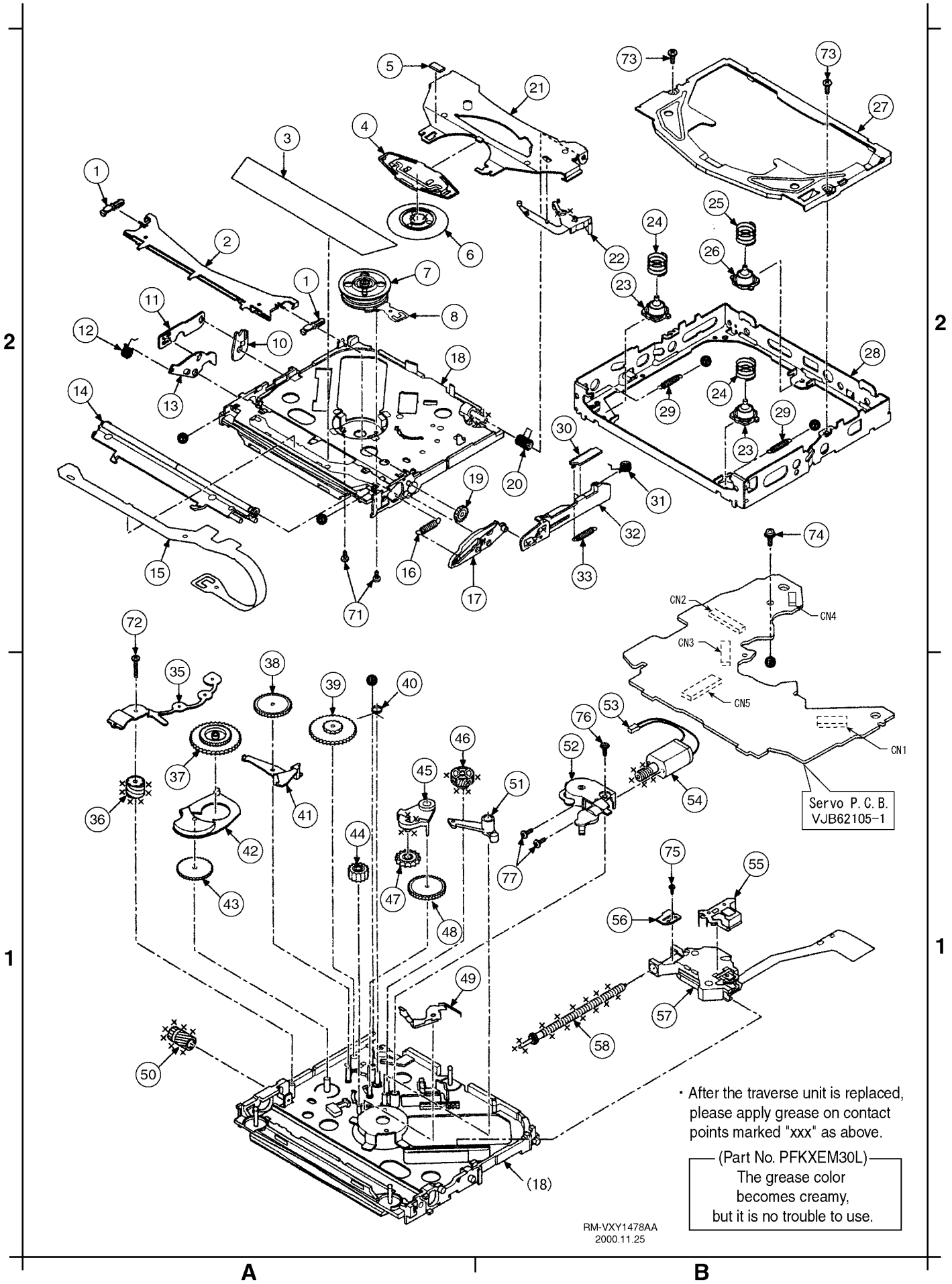

- After the traverse unit is replaced, please apply grease on contact points marked "xxx" as above.

(Part No. PFKXEM30L)
The grease color becomes creamy, but it is no trouble to use.

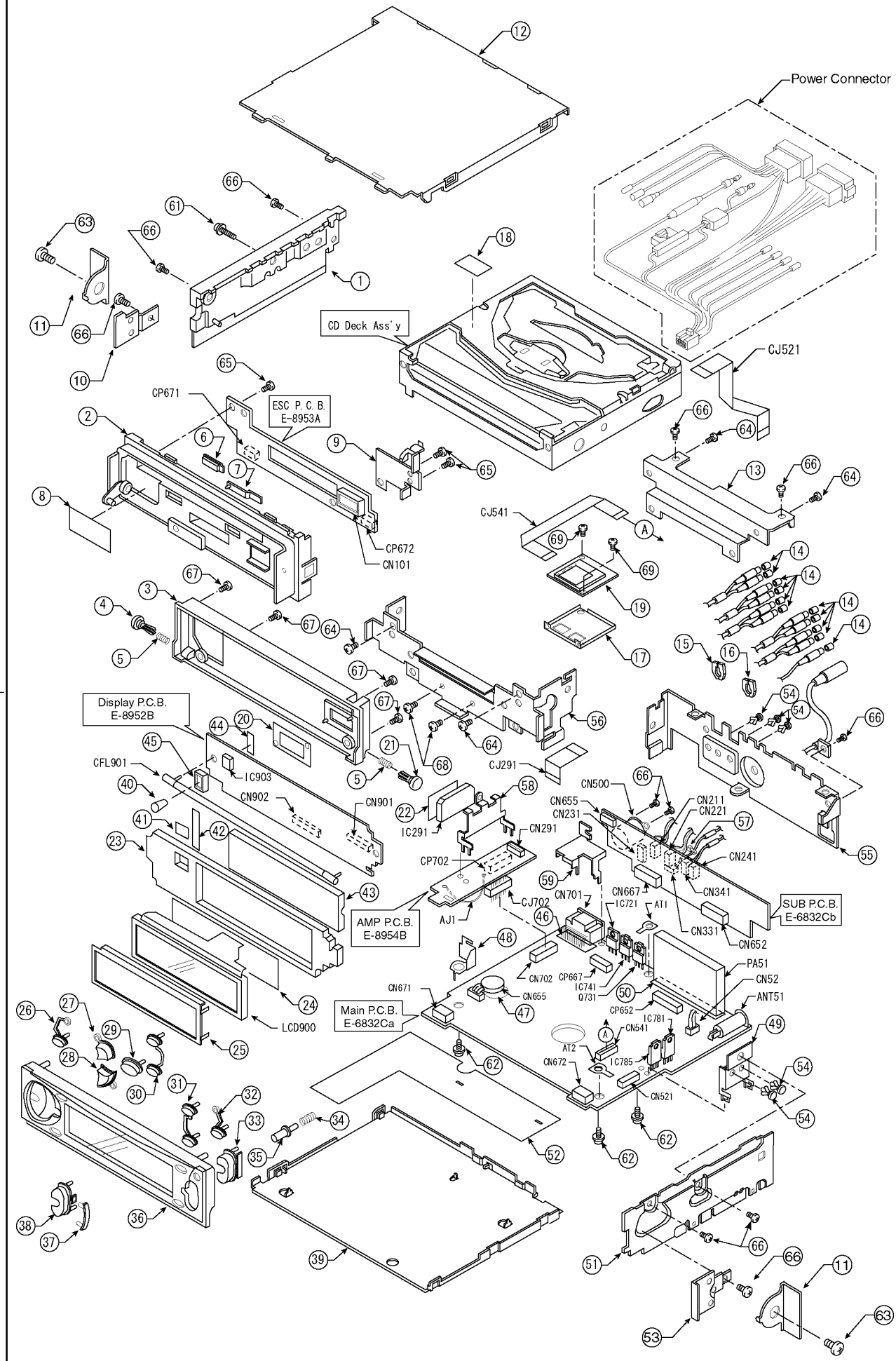
Power Connector
CD Deck Ass'y
CJ521
ESC P.C.B.
E-8953A
CP671
CP672
CN101
CJ541
Display P.C.B.
E-8952B
CFL901
IC903
CN902
CN901
IC291
CJ291
CN291
CP702
AMP P.C.B.
E-8954B
AJ1
CJ702
CN500
CN655
CN231
CN211
CN221
CN241
CN341
CN331
CN652
SUB P.C.B.
E-6832Cb
CN701
CN667
IC721
AT1
CN702
CP667
IC741
Q731
CN671
CN655
Main P.C.B.
E-6832Ca
CP652
IC781
CN541
AT2
CN672
IC785
CN521
PA51
CN52
ANT51
LCD900

A B

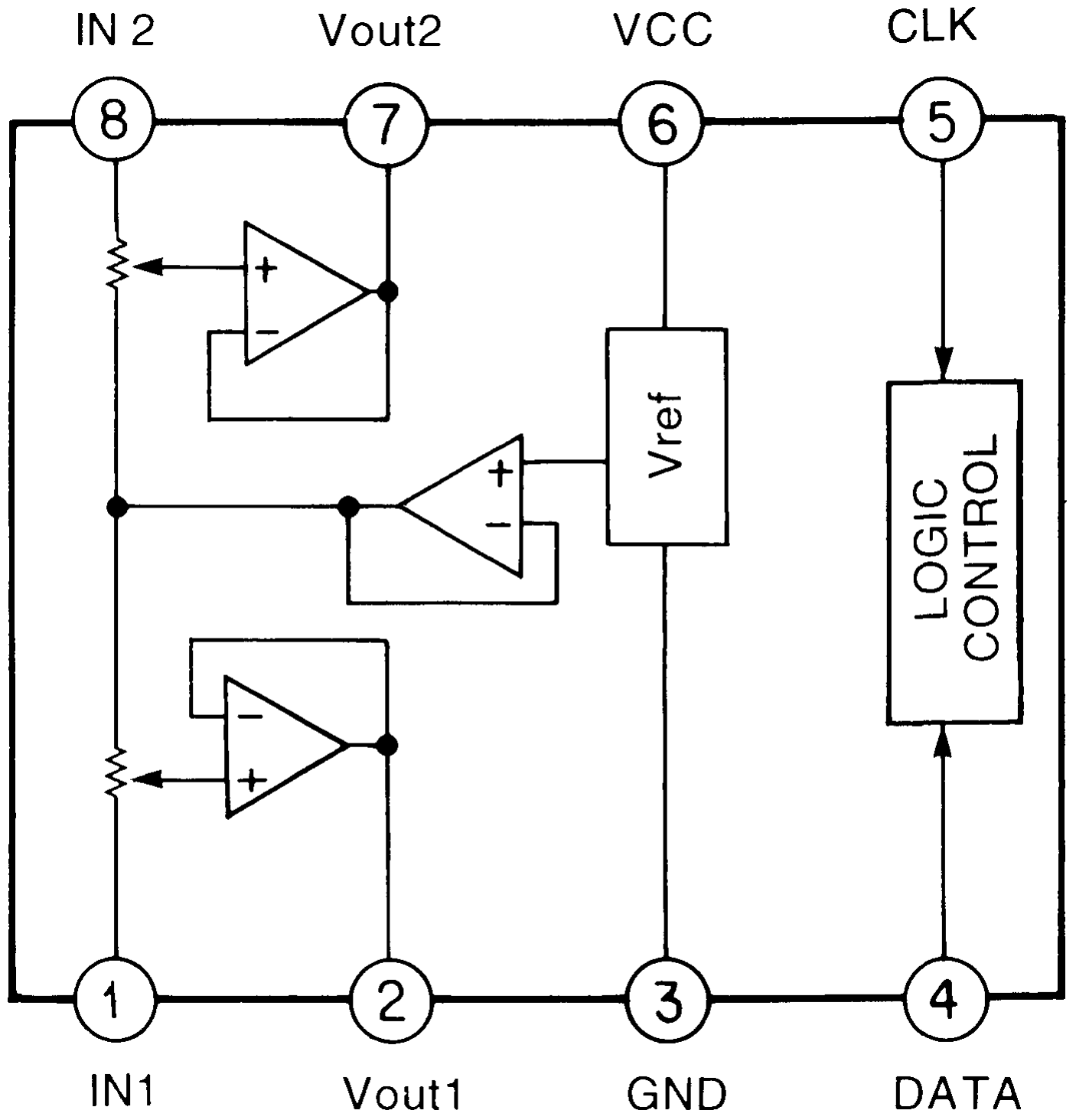
IN 2
Vout2
VCC
CLK
8
7
6
5
Vref
LOGIC CONTROL
1
2
3
4
IN1
Vout1
GND
DATA

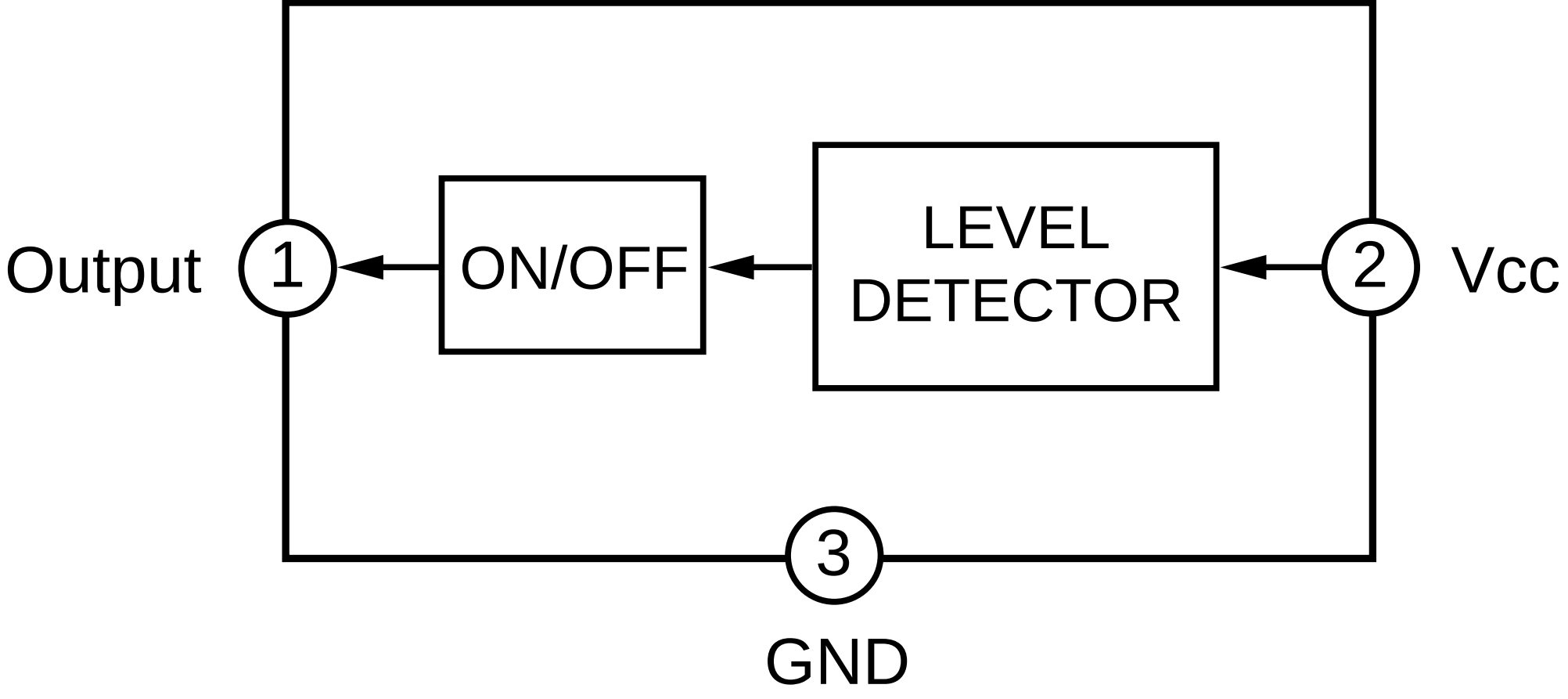
Output
1
ON/OFF
LEVEL
DETECTOR
2
Vcc
3
GND

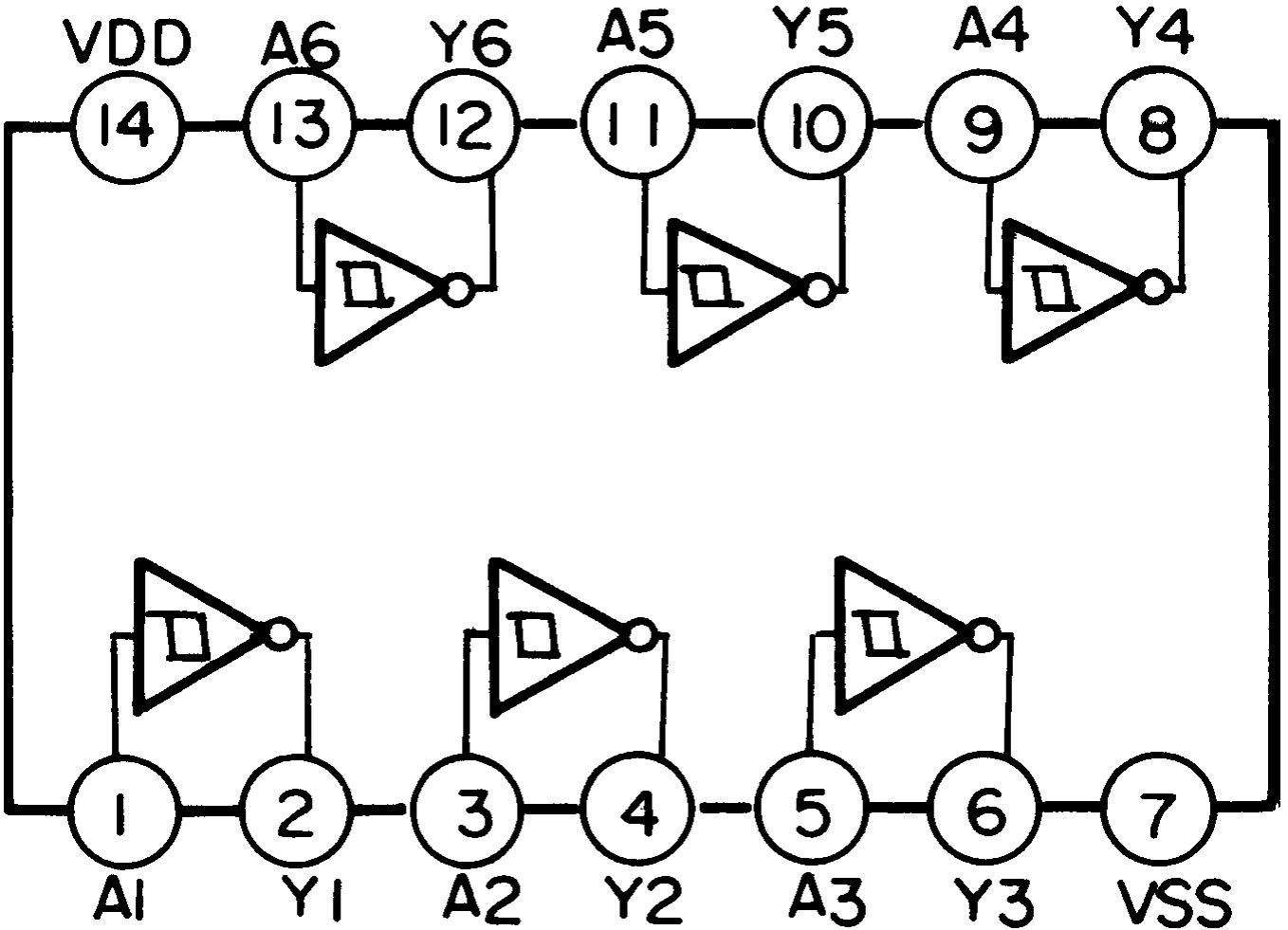
VDD
A6
Y6
A5
Y5
A4
Y4
14
13
12
11
10
9
8
1
2
3
4
5
6
7
A1
Y1
A2
Y2
A3
Y3
VSS

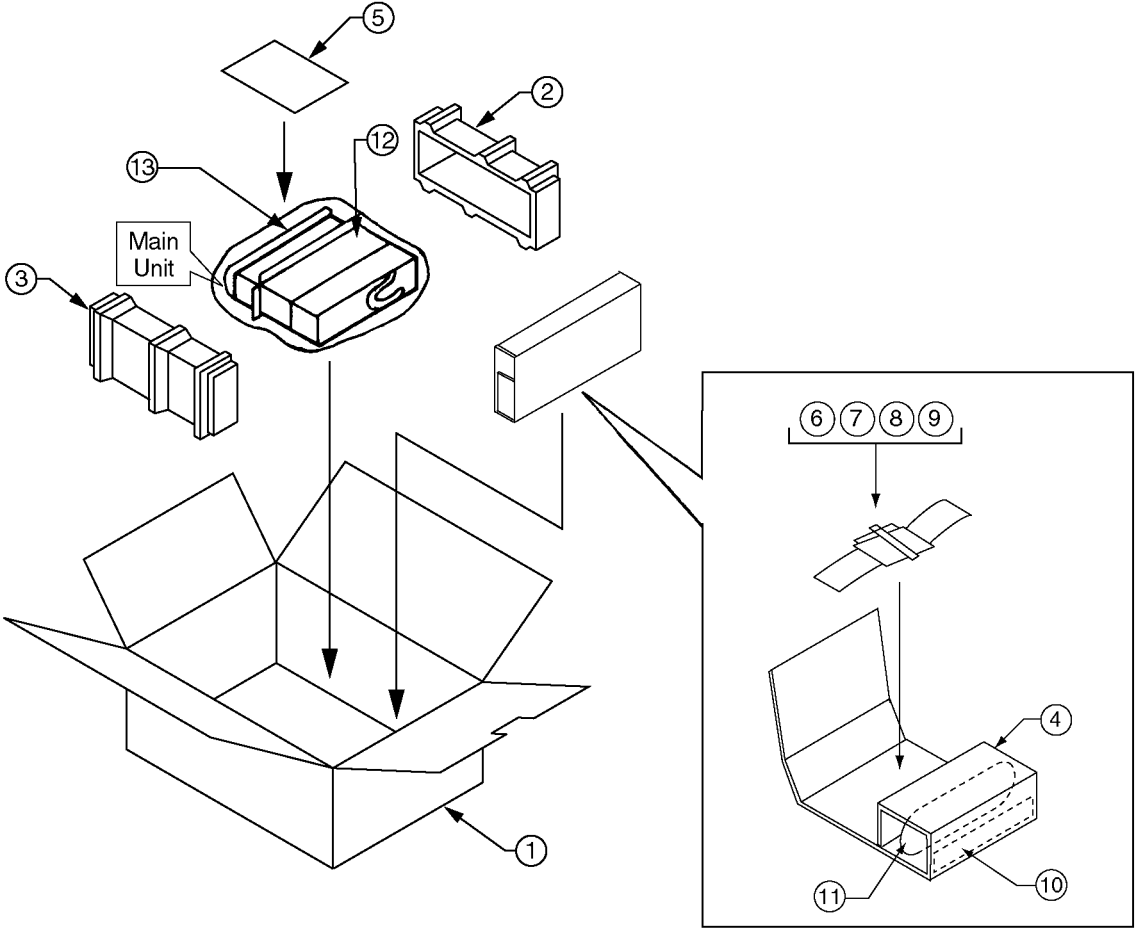
5
2
12
13
Main Unit
3
6
7
8
9
4
11
10
1

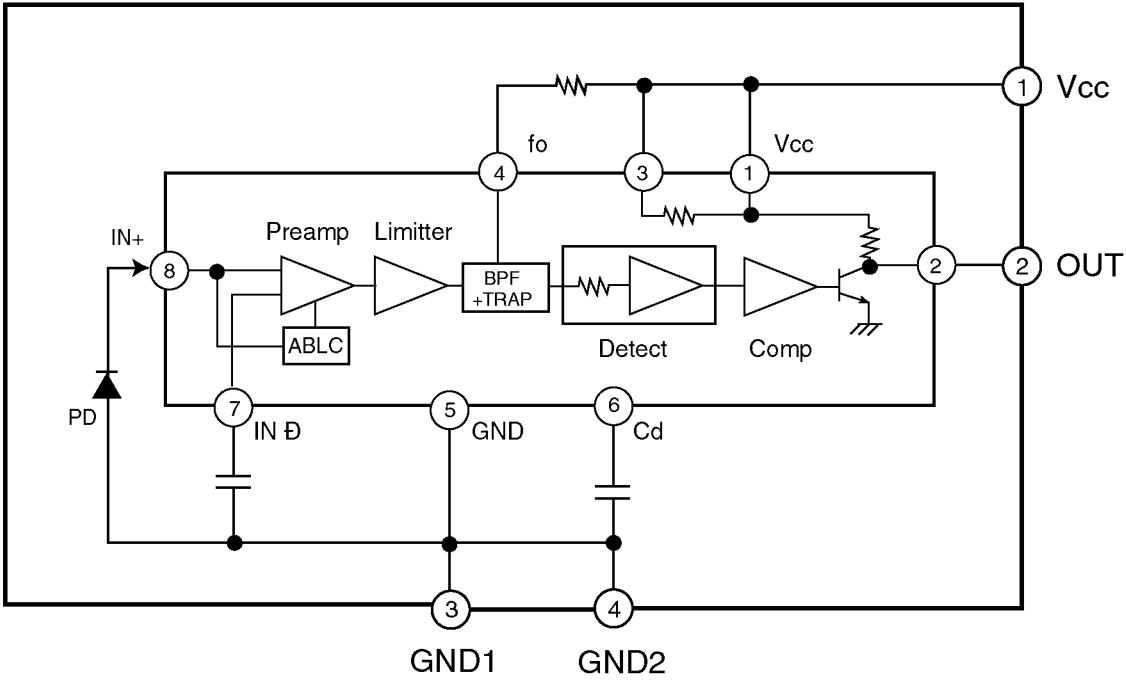
Vcc
1
fo
Vcc
4
3
1
IN+
8
Preamp
Limitter
BPF
+TRAP
2
2
OUT
ABLC
Detect
Comp
PD
7
IN Đ
5
GND
6
Cd
3
4
GND1
GND2

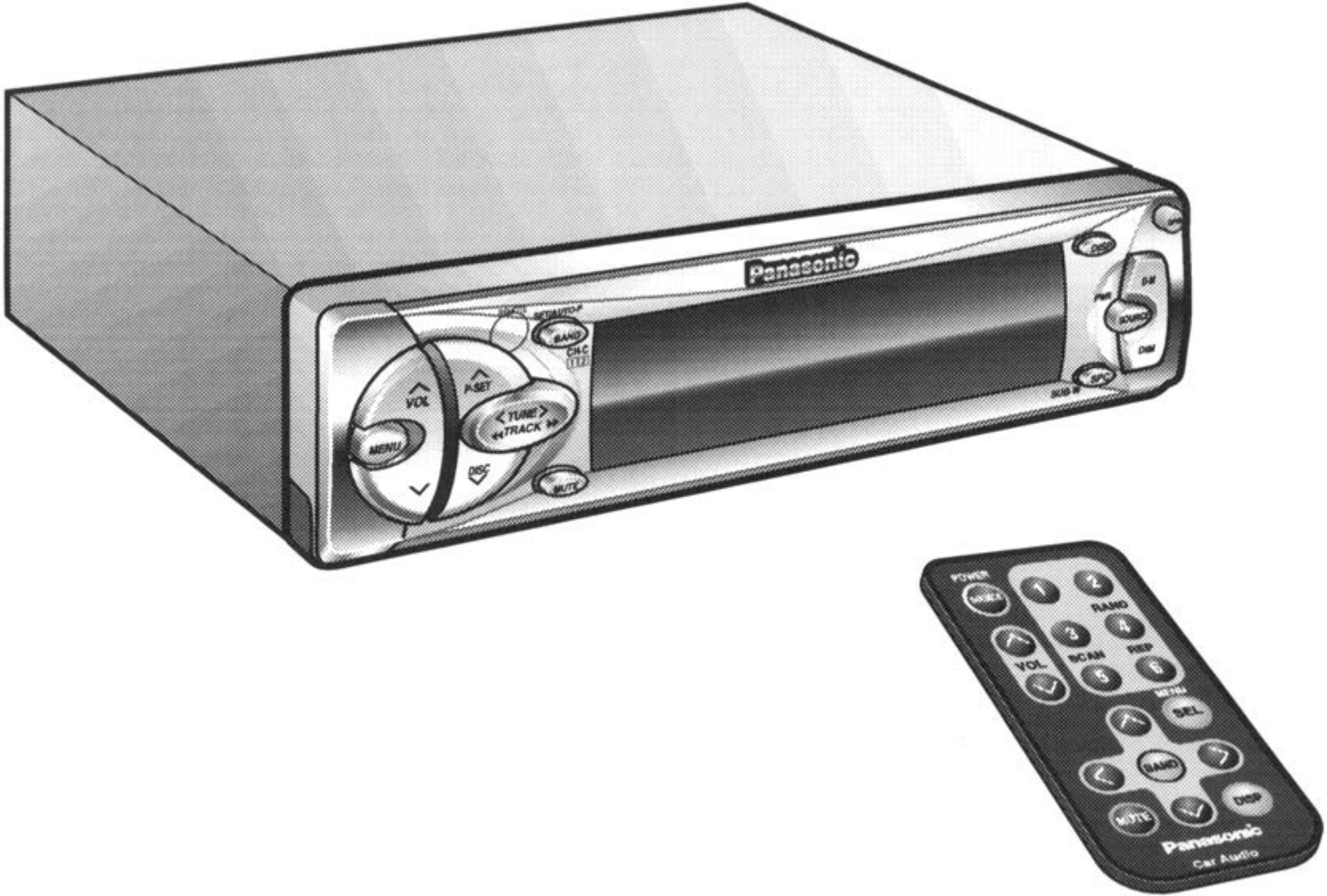
Panasonic
BAND
CH-C
P-SET
VOL
TUNE
TRACK
MENU
DISC
MUTE
SOUND
DIM
POWER
BAND
SCAN
REP
VOL
SEL
BAND
MUTE
DISP
Panasonic
Car Audio

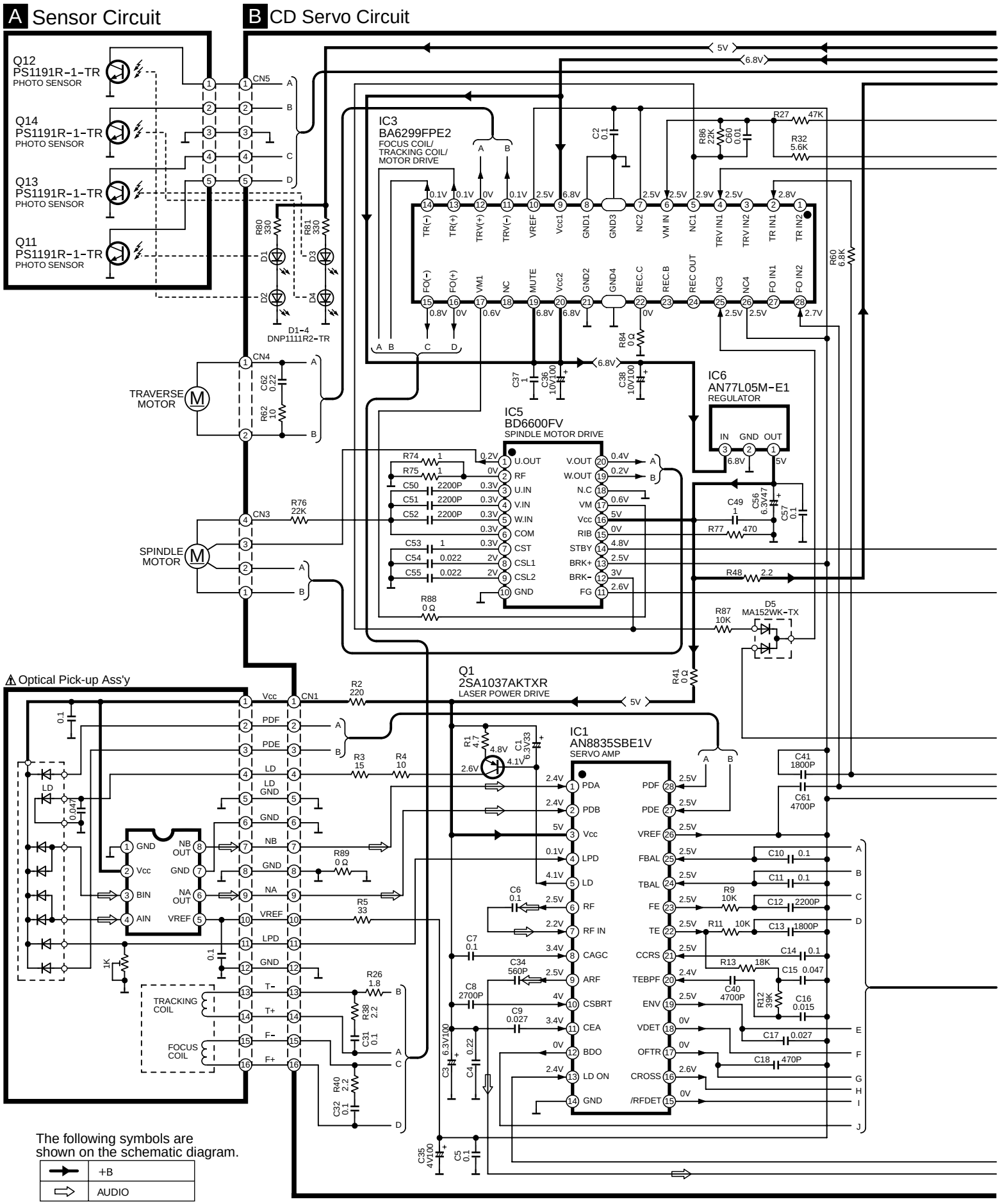
A Sensor Circuit
B CD Servo Circuit
Q12
PS1191R-1-TR
PHOTO SENSOR
Q14
PS1191R-1-TR
PHOTO SENSOR
Q13
PS1191R-1-TR
PHOTO SENSOR
Q11
PS1191R-1-TR
PHOTO SENSOR
CN5
R80 330
R81 330
D1
D2
D3
D4
D1-4
DNP1111R2-TR
CN4
TRAVERSE MOTOR
C62 0.22
R62 10
CN3
R76 22K
SPINDLE MOTOR
IC3
BA6299FPE2
FOCUS COIL/
TRACKING COIL/
MOTOR DRIVE
TR(-)
TR(+)
TRV(+)
TRV(-)
VREF
Vcc1
GND1
GND3
NC2
VM IN
NC1
TRV IN1
TRV IN2
TR IN1
TR IN2
FO(-)
FO(+)
VM1
NC
MUTE
Vcc2
GND2
GND4
REC.C
REC.B
REC OUT
NC3
NC4
FO IN1
FO IN2
R27 47K
R32 5.6K
R86 22K
C60 0.01
C2 0.1
R60 6.8K
R84 0Ω
C37 1
C36 10V100
C38 10V100
IC6
AN77L05M-E1
REGULATOR
IN
GND
OUT
C49 1
C56 6.3V47
C57 0.1
R77 470
IC5
BD6600FV
SPINDLE MOTOR DRIVE
U.OUT
RF
U.IN
V.IN
W.IN
COM
CST
CSL1
CSL2
GND
V.OUT
W.OUT
N.C
VM
Vcc
RIB
STBY
BRK+
BRK-
FG
R74 1
R75 1
C50 2200P
C51 2200P
C52 2200P
C53 1
C54 0.022
C55 0.022
R88 0Ω
R48 2.2
R87 10K
D5
MA152WK-TX
R41 0Ω
Q1
2SA1037AKTXR
LASER POWER DRIVE
R2 220
Optical Pick-up Ass'y
Vcc
PDF
PDE
LD
LD GND
GND
NB
NA
VREF
LPD
T-
T+
F-
F+
CN1
BIN
AIN
NB OUT
NA OUT
R3 15
R4 10
R5 33
R89 0Ω
R26 1.8
R38 2.2
C31 0.1
R40 2.2
C32 0.1
TRACKING COIL
FOCUS COIL
R1 4.7
C1 6.3V33
IC1
AN8835SBE1V
SERVO AMP
PDA
PDB
Vcc
LPD
LD
RF
RF IN
CAGC
ARF
CSBRT
CEA
BDO
LD ON
GND
PDF
PDE
VREF
FBAL
TBAL
FE
TE
CCRS
TEBPF
ENV
VDET
OFTR
CROSS
/RFDET
C41 1800P
C61 4700P
C10 0.1
C11 0.1
C12 2200P
C13 1800P
C14 0.1
C15 0.047
C16 0.015
C17 0.027
C18 470P
R9 10K
R11 10K
R13 18K
R12 39K
C40 4700P
C6 0.1
C7 0.1
C34 560P
C8 2700P
C9 0.027
C3 6.3V100
C4 0.22
C35 4V100
C5 0.1
R53 33
1K
The following symbols are
shown on the schematic diagram.
+B
AUDIO

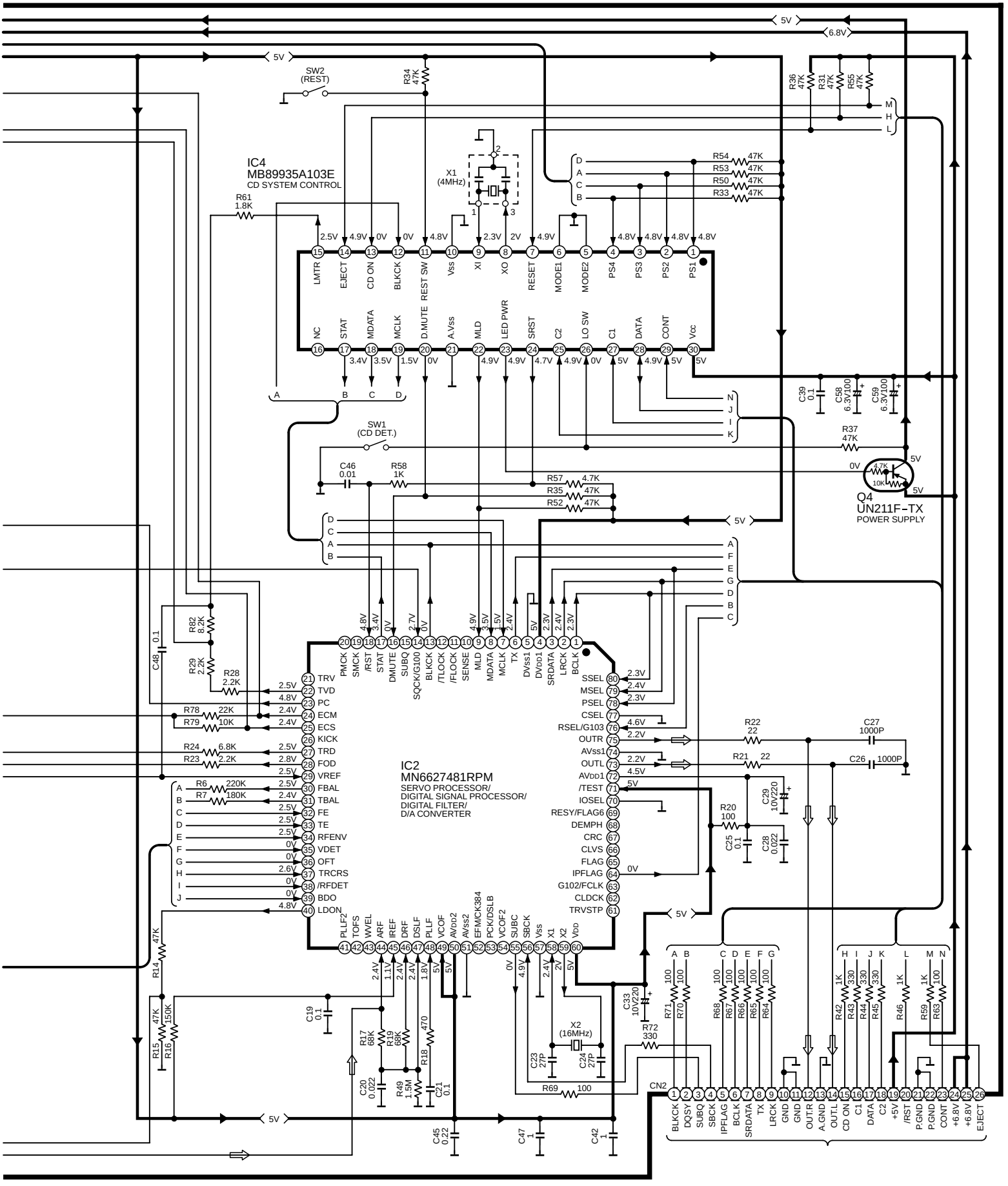

The following symbols are shown on the schematic diagram.

→	+B
⇨	AUDIO

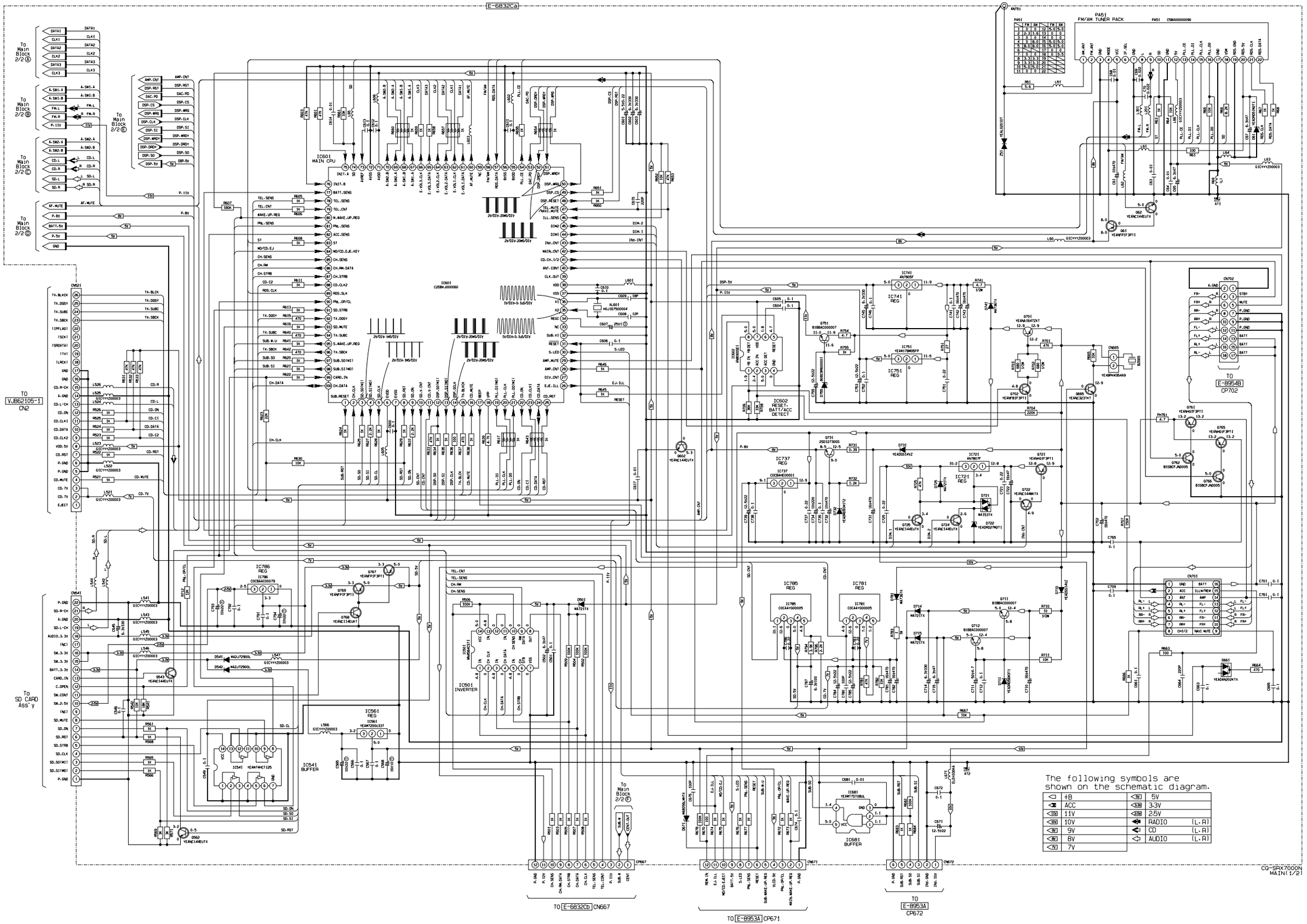
E-6832Ca
IC601 MAIN CPU
IC501 INVERTER
IC541 BUFFER
IC561 REG
IC602 RESET-BATT/ACC DETECT
IC681 BUFFER
IC721 REG
IC737 REG
IC741 REG
IC751 REG
IC781 REG
IC785 REG
IC786 REG
PA51 FM/AM TUNER PACK
CN521
CN541
CN667
CN671
CN672
CN701
CN702
TO E-8954B CP702
TO VJ862105-1 CN2
TO SD CARD Ass'y
TO E-6832Cb CN667
TO E-8953A CP671
TO E-8953A CP672
The following symbols are shown on the schematic diagram.
+B
5V
ACC
3.3V
11V
2.5V
10V
RADIO (L,R)
9V
CD (L,R)
8V
AUDIO (L,R)
7V
CG-SRX7000N
MAIN(1/2)

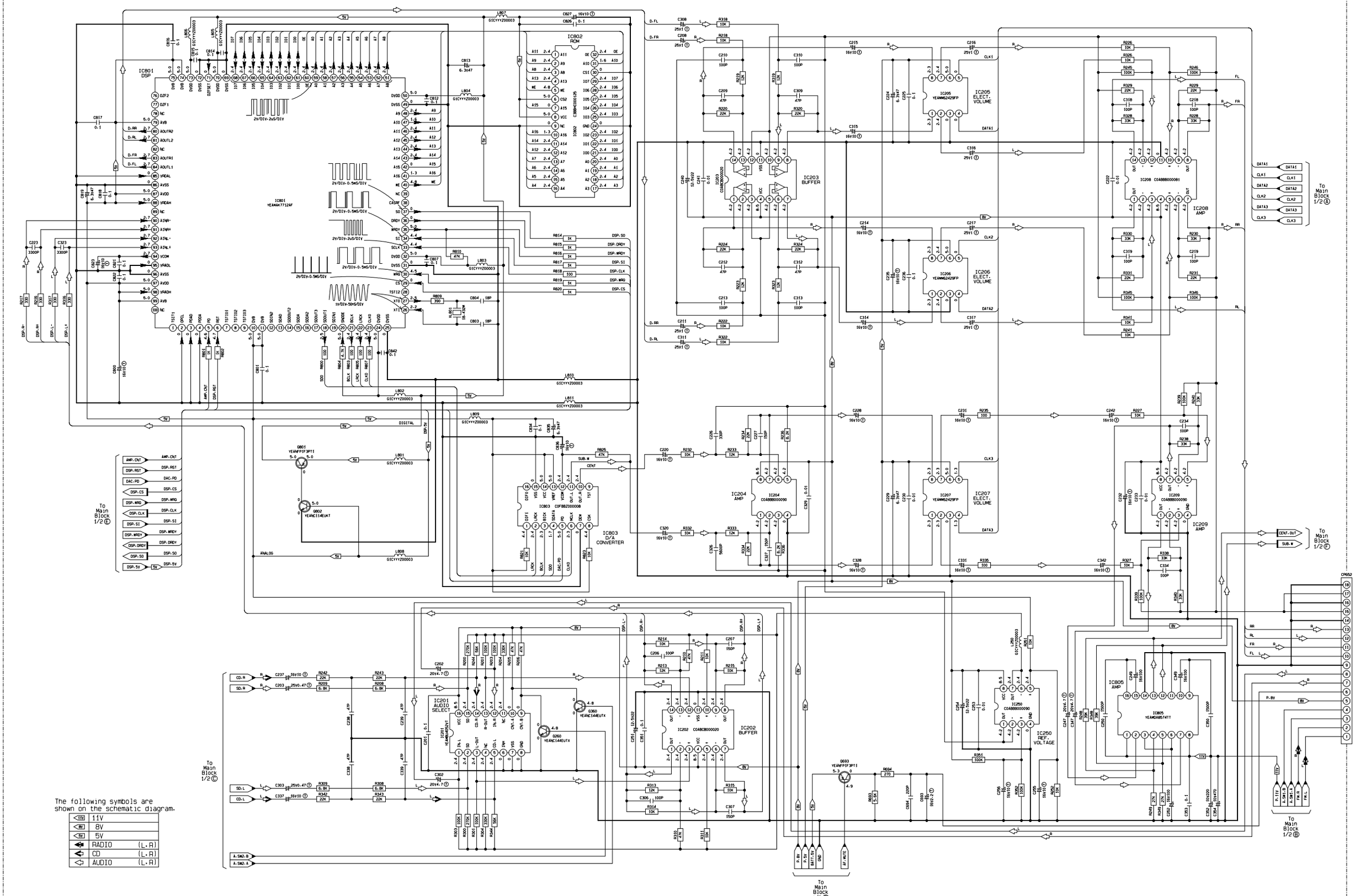

The following symbols are shown on the schematic diagram.

15V	11V
8V	8V
5V	5V
RADIO	(L,R)
CD	(L,R)
AUDIO	(L,R)

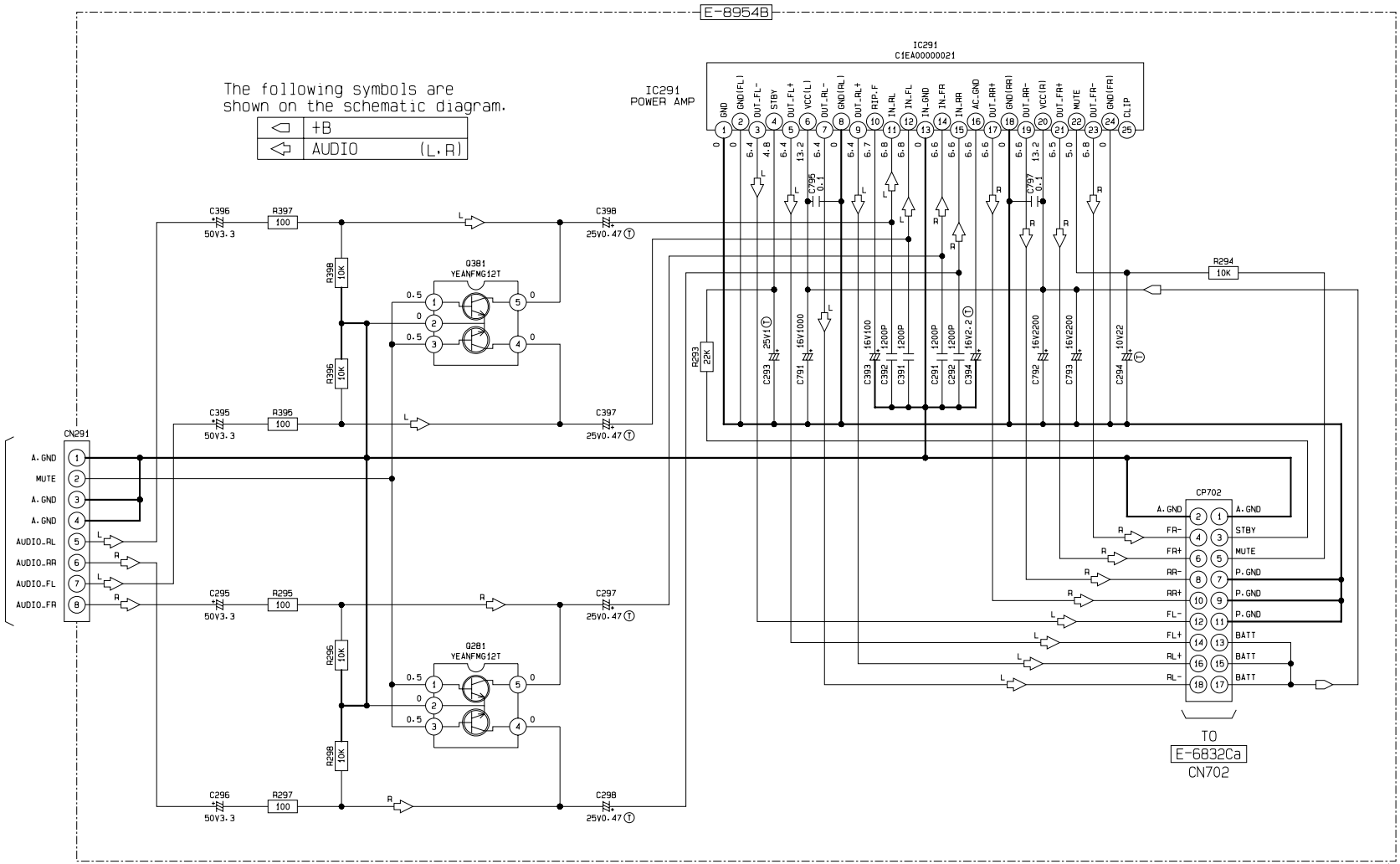

CQ-SRX7000N
AMP

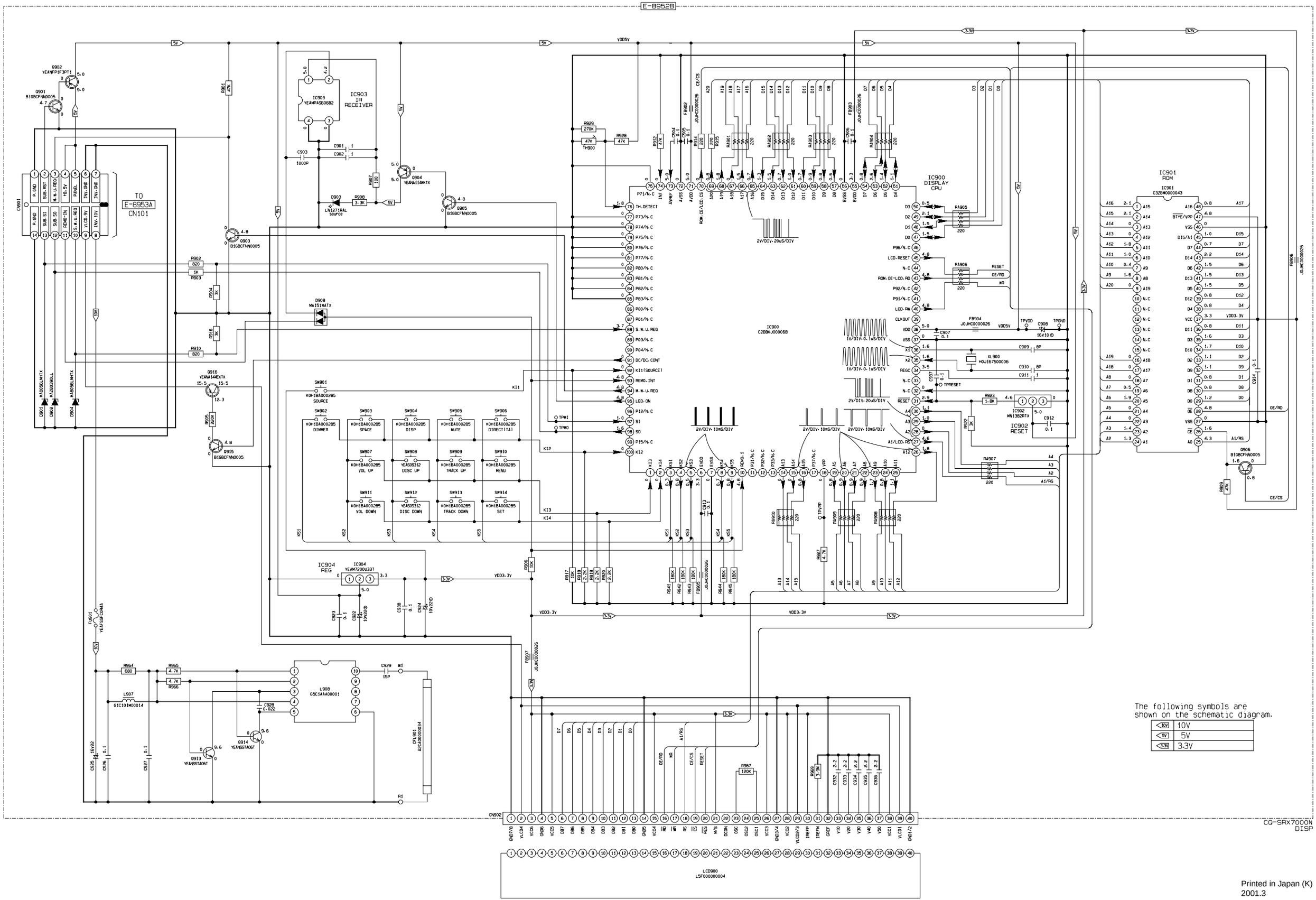

Printed in Japan (K)
2001.3

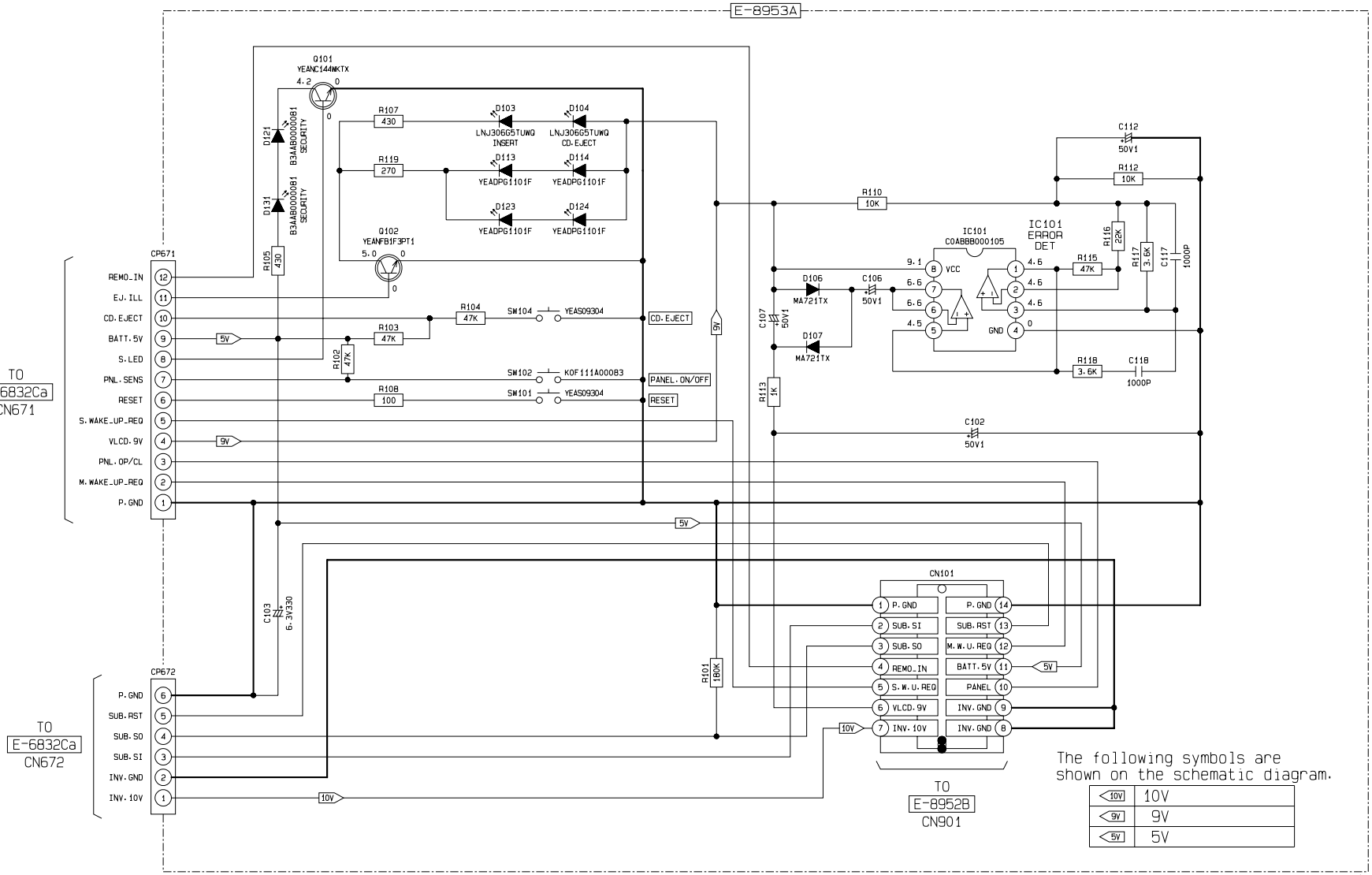
E-8953A
Q101
YEANC144WKTX
Q102
YEANFB1F3PT1
R107 430
R119 270
D103 LNJ306G5TUWQ INSERT
D104 LNJ306G5TUWQ CD.EJECT
D113 YEADPG1101F
D114 YEADPG1101F
D123 YEADPG1101F
D124 YEADPG1101F
D121 B3AAB0000081 SECURITY
D131 B3AAB0000081 SECURITY
R105 430
R104 47K
R103 47K
R102 47K
R108 100
SW104 YEAS09304
SW102 KOF111A00083
SW101 YEAS09304
CD.EJECT
PANEL.ON/OFF
RESET
CP671
REMO_IN
EJ.ILL
CD.EJECT
BATT.5V
S.LED
PNL.SENS
RESET
S.WAKE_UP_REQ
VLCD.9V
PNL.OP/CL
M.WAKE_UP_REQ
P.GND
TO
E-6832Ca
CN671
CP672
P.GND
SUB.RST
SUB.SO
SUB.SI
INV.GND
INV.10V
TO
E-6832Ca
CN672
C103 6.3V330
R110 10K
C112 50V1
R112 10K
IC101
C0ABBB000105
IC101 ERROR DET
VCC
GND
R115 47K
R116 22K
R117 3.6K
C117 1000P
D106 MA721TX
D107 MA721TX
C106 50V1
C107 50V1
R113 1K
R118 3.6K
C118 1000P
C102 50V1
R101 180K
CN101
P.GND
SUB.SI
SUB.SO
REMO_IN
S.W.U.REQ
VLCD.9V
INV.10V
SUB.RST
M.W.U.REQ
BATT.5V
PANEL
INV.GND
TO
E-8952B
CN901
The following symbols are shown on the schematic diagram.
10V 10V
9V 9V
5V 5V
CQ-SRX7000N
ESC

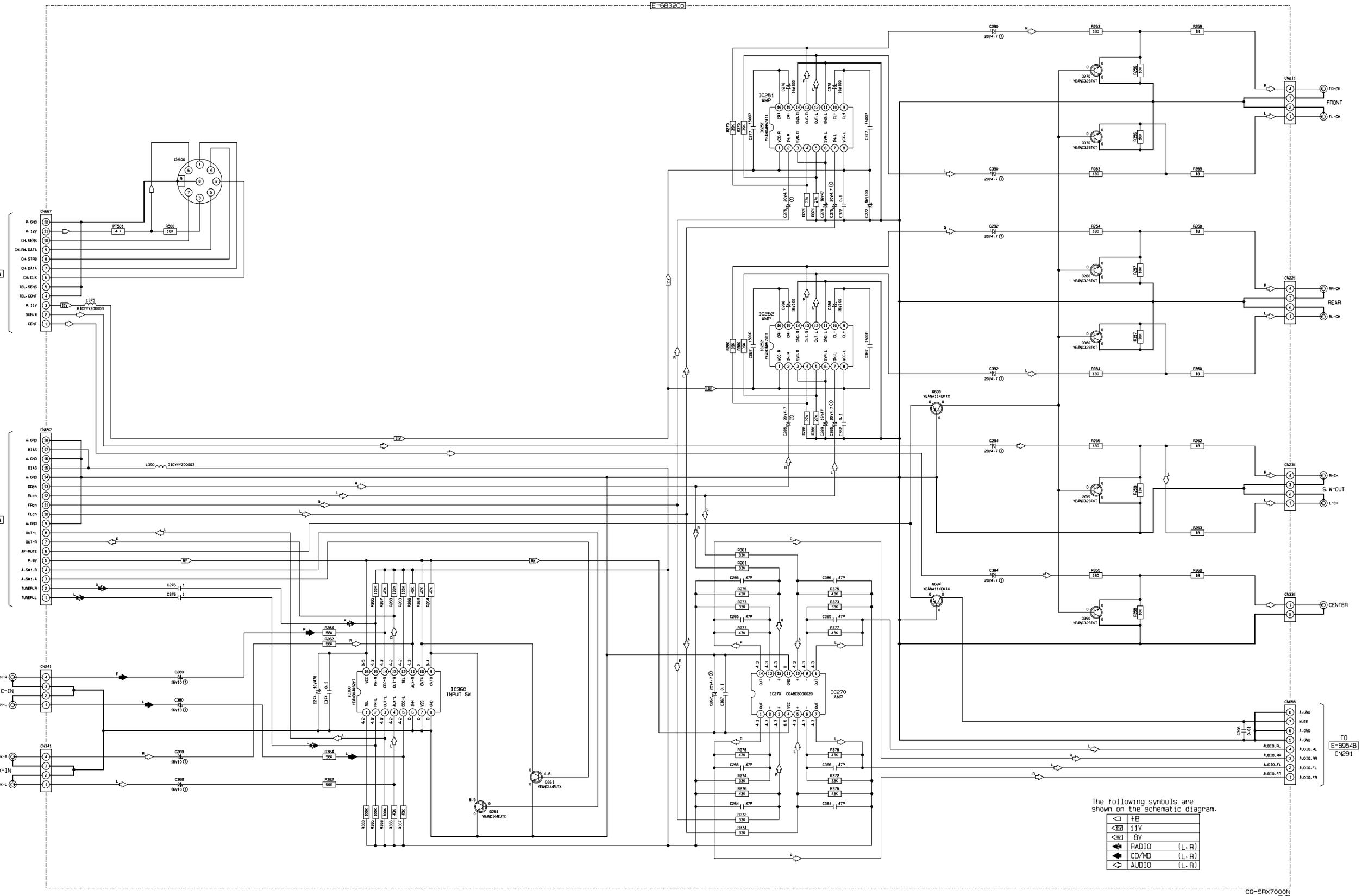
E-6832Cb
TO E-6832Ca CP667
TO E-6832Ca CP652
TO E-8954B CN291
CN667
CN652
CN500
CN241
CN341
CN211
CN221
CN231
CN331
CN665
P. GND
P. 12V
CH. SENS
CH. RM. DATA
CH. STRB
CH. DATA
CH. CLK
TEL. SENS
TEL. CONT
P. 11V
SUB. W
CENT
A. GND
BIAS
RRch
RLch
FRch
FLch
OUT-L
OUT-R
AF-MUTE
P. 8V
A. SW1. B
A. SW1. A
TUNER. R
TUNER. L
CH-R
CH. C-IN
CH-L
AUX-R
AUX-IN
AUX-L
FR-CH
FRONT
FL-CH
RR-CH
REAR
RL-CH
R-CH
S. W-OUT
L-CH
CENTER
MUTE
AUDIO. RL
AUDIO. RR
AUDIO. FL
AUDIO. FR
IC251 AMP
IC252 AMP
IC360 INPUT SW
IC270 AMP
IC270 C0ABCB000020
The following symbols are shown on the schematic diagram.
+B
11V
8V
RADIO (L. R)
CD/MD (L. R)
AUDIO (L. R)
CQ-SRX7000N SUB

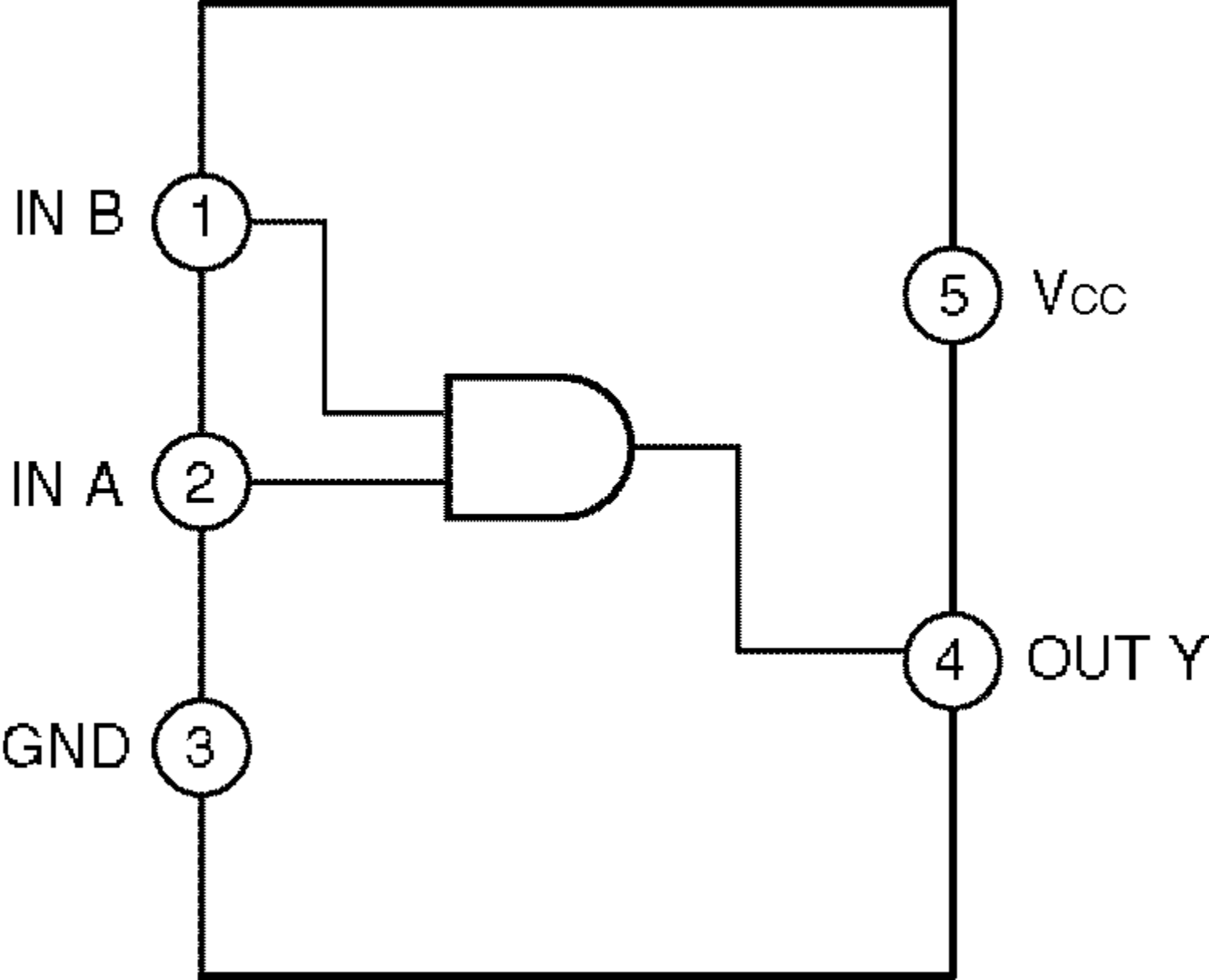
IN B
1
IN A
2
GND
3
5
VCC
4
OUT Y

B CD Servo P.C.B. (Side A)

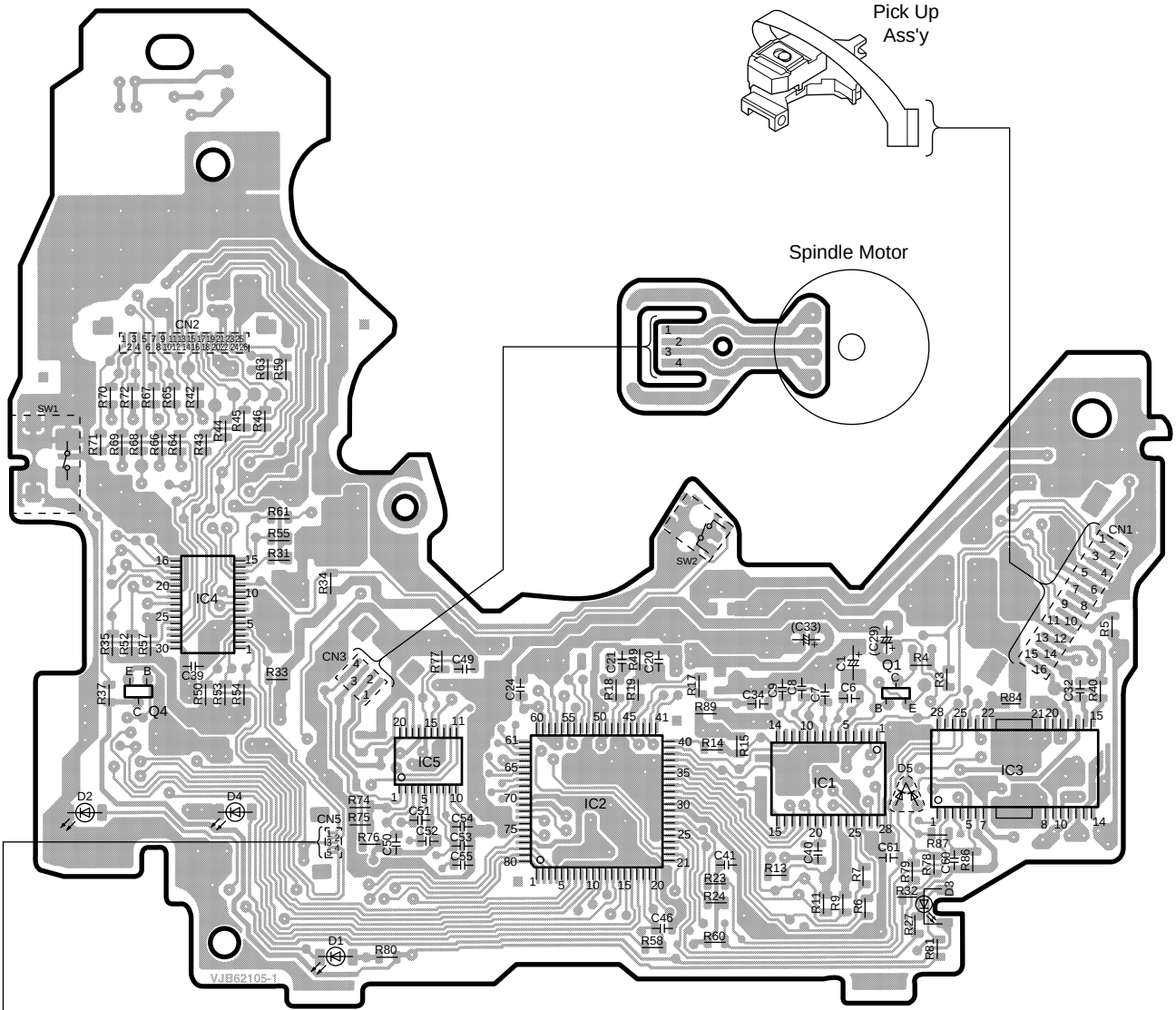

A Sencor P.C.B.

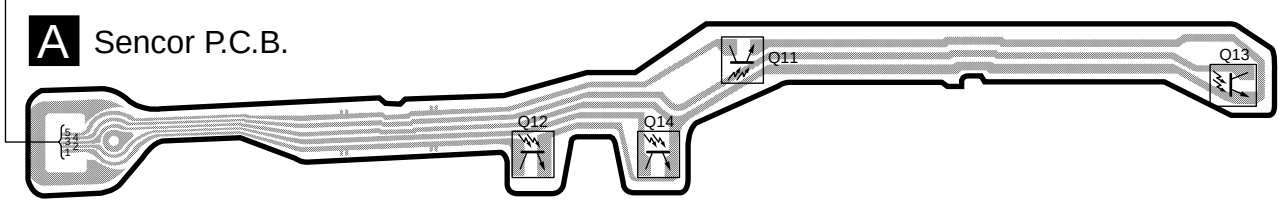

Note: This printed circuit board is subject to change without notice for improvements.

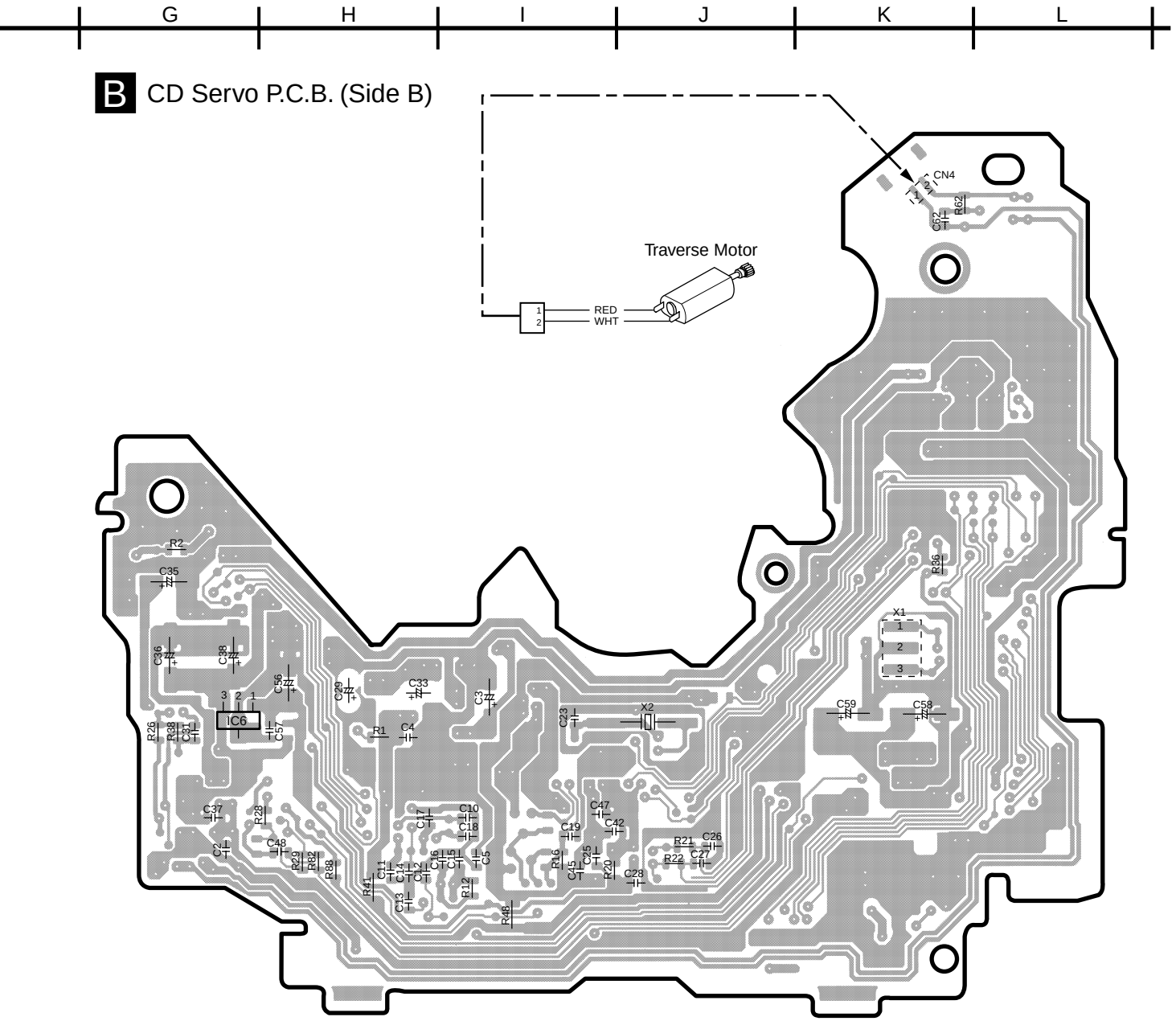

■Electric Parts Location

Ref. No.	Lo. No.	Ref. No.	Lo. No.	Ref. No.	Lo. No.	Ref. No.	Lo. No.	Ref. No.	Lo. No.	Ref. No.	Lo. No.	Ref. No.	Lo. No.	Ref. No.	Lo. No.
A Sensor P.C.B.															
Q11	7D	Q12	7C	Q13	7F	Q14	7D								
B CD Servo P.C.B. (Side A)															
IC1	5E	SW2	4D	R14	5D	R37	4A	R57	4A	R71	3A	R89	5D	C39	4B
IC2	5D	CN1	4F	R15	5D	R40	4F	R58	6D	R72	3A	C1	4E	C40	5E
IC3	5F	CN2	3B	R17	4D	R42	3B	R59	3B	R74	5B	C6	4E	C41	5D
IC4	4B	CN3	4B	R18	4D	R43	3B	R60	6D	R75	5B	C7	4E	C46	6D
IC5	5C	CN5	5B	R19	4D	R44	3B	R61	4B	R76	5C	C8	4E	C49	4C
Q1	4E	R3	4E	R23	5D	R45	3B	R63	3B	R77	4C	C9	4E	C50	5C
Q4	4A	R4	4E	R24	6D	R46	3B	R64	3B	R78	5E	C20	4D	C51	5C
D1	6B	R5	4F	R27	6E	R49	4D	R65	3B	R79	5E	C21	4D	C52	5C
D2	5A	R6	6E	R31	4B	R50	4B	R66	3A	R80	6C	C24	4C	C53	5C
D3	6E	R7	5E	R32	5E	R52	4A	R67	3A	R81	6E	(C29)	4E	C54	5C
D4	5B	R9	6E	R33	4B	R53	4B	R68	3A	R84	5F	C32	4F	C55	5C
D5	5E	R11	6E	R34	4B	R54	4B	R69	3A	R86	5E	(C33)	4E	C60	5E
SW1	3A	R13	5E	R35	4A	R55	4B	R70	3A	R87	5E	C34	5D	C61	5E
B CD Servo P.C.B. (Side B)															
IC6	4G	R16	5I	R36	4K	C2	5G	C13	5H	C23	4I	C33	4H	C47	5I
X1	4K	R20	5I	R38	4G	C3	4I	C14	5H	C25	5I	C35	4G	C48	5H
X2	4J	R21	5J	R41	5H	C4	4H	C15	5I	C26	5J	C36	4G	C56	4H
CN4	1K	R22	5J	R48	5I	C5	5I	C16	5I	C27	5J	C37	5G	C57	4H
R1	4H	R26	4G	R62	1K	C10	5I	C17	5H	C28	5J	C38	4G	C58	4K
R2	3G	R28	5H	R82	5H	C11	5H	C18	5I	C29	4H	C42	5I	C59	4K
R12	5I	R29	5H	R88	5H	C12	5H	C19	5I	C31	4G	C45	5I	C62	2K

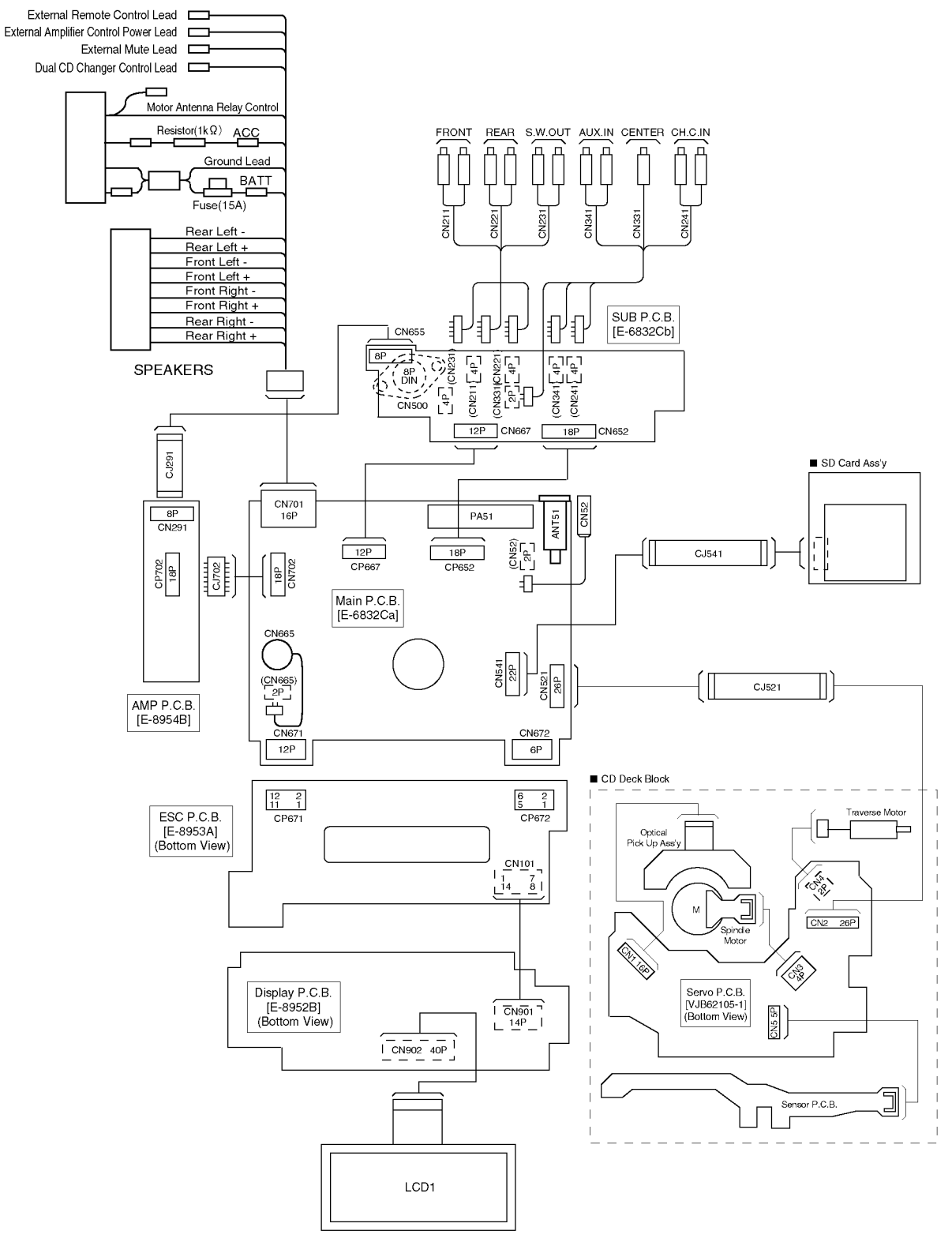
External Remote Control Lead
External Amplifier Control Power Lead
External Mute Lead
Dual CD Changer Control Lead
Motor Antenna Relay Control
Resistor(1kΩ)
ACC
Ground Lead
BATT
Fuse(15A)
Rear Left -
Rear Left +
Front Left -
Front Left +
Front Right -
Front Right +
Rear Right -
Rear Right +
SPEAKERS
FRONT
REAR
S.W.OUT
AUX.IN
CENTER
CH.C.IN
CN211
CN221
CN231
CN341
CN331
CN241
SUB P.C.B.
[E-6832Cb]
CN655
8P
8P
DIN
CN500
(CN231)
(CN211)
(CN331)
(CN221)
(CN341)
(CN241)
12P
CN667
18P
CN652
CJ291
8P
CN291
CN701
16P
PA51
ANT51
CN52
■ SD Card Ass'y
CP702
18P
CJ702
18P
CN702
12P
CP667
18P
CP652
(CN52)
2P
CJ541
Main P.C.B.
[E-6832Ca]
CN665
(CN665)
2P
CN541
22P
CN521
26P
CJ521
AMP P.C.B.
[E-8954B]
CN671
12P
CN672
6P
■ CD Deck Block
ESC P.C.B.
[E-8953A]
(Bottom View)
CP671
CP672
CN101
Traverse Motor
Optical
Pick Up Ass'y
M
Spindle
Motor
CN1 16P
CN2 26P
CN3 4P
Servo P.C.B.
[VJB62105-1]
(Bottom View)
CN5 5P
Display P.C.B.
[E-8952B]
(Bottom View)
CN901
14P
CN902 40P
Sensor P.C.B.
LCD1

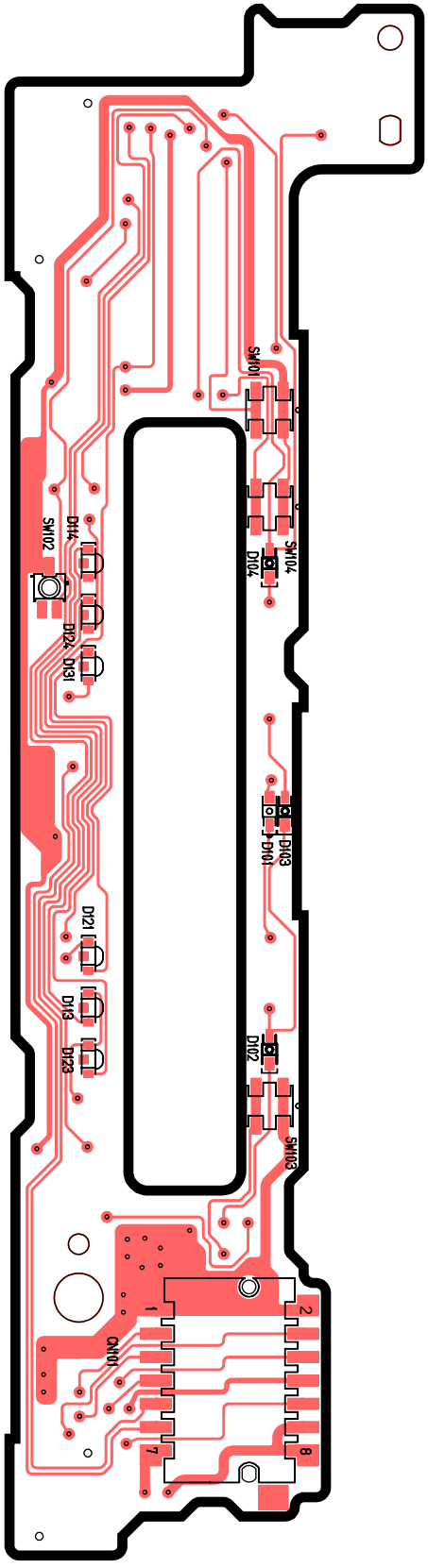

[E-8953A][Top View]

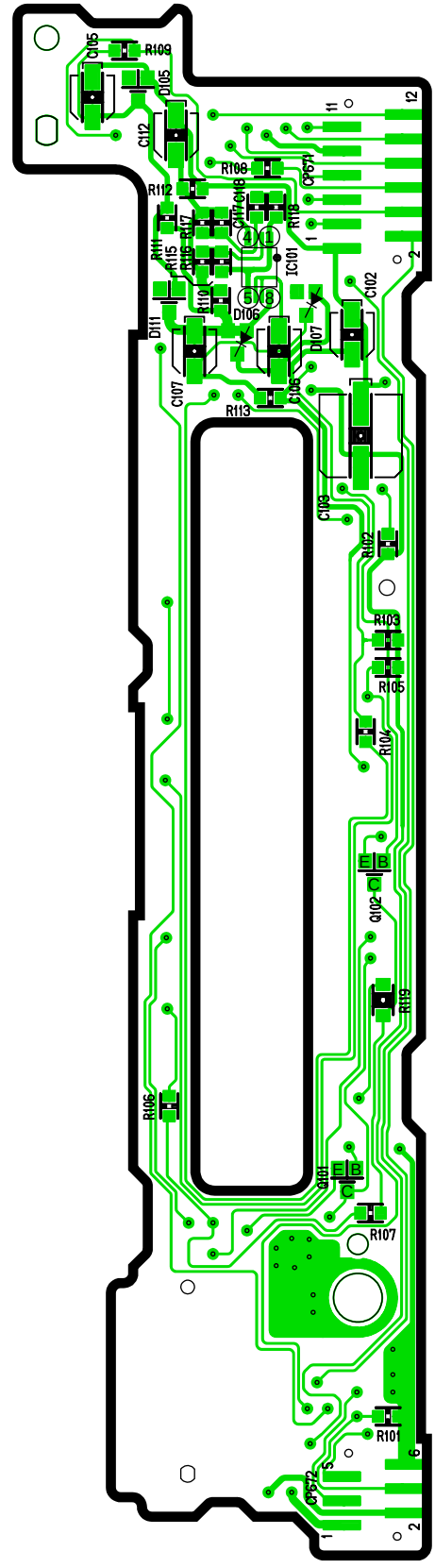

[E-8953A][Bottom View]