MOSFET
50Wx4
Panasonic
CQ-R223W
REMOTE
BAND
APM
VOL/ PUSH SEL
MODE
87.5 FM2
LOUD
ST
TUNE
TRACK
PWR
LOUD
DISC
SCAN
REPEAT
RANDOM
MUTE
1 MTL
NR 2
3 TPS
REP 4
5 B•S
6
MONO
DISP

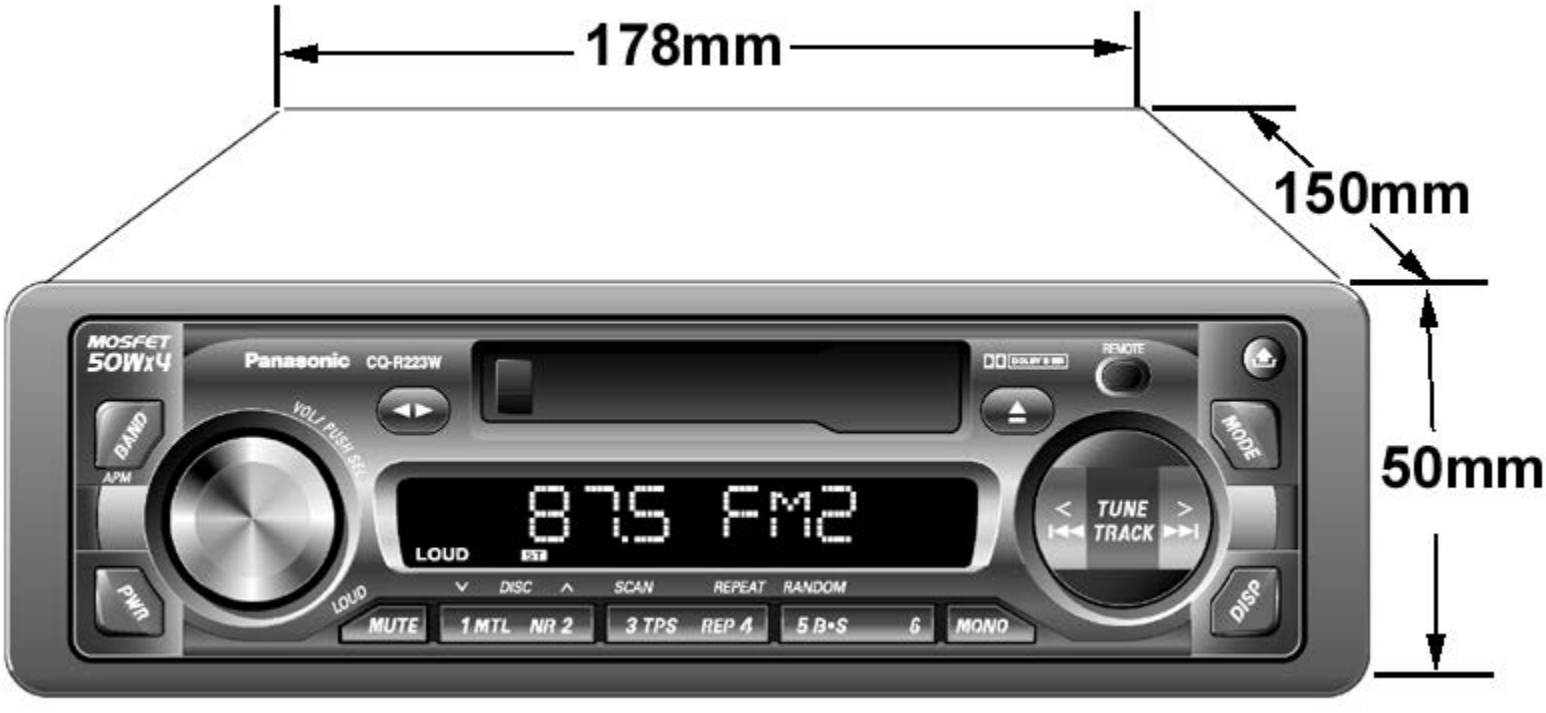
178mm
150mm
50mm
MOSFET
50Wx4
Panasonic
CQ-R223W
REMOTE
BAND
APM
VOL/ PUSH SEL
MODE
87.5 FM2
LOUD
TUNE
TRACK
PWR
LOUD
DISC
SCAN
REPEAT
RANDOM
DISP
MUTE
1 MTL
NR 2
3 TPS
REP 4
5 B•S
6
MONO

IC601 AN8065S-E1

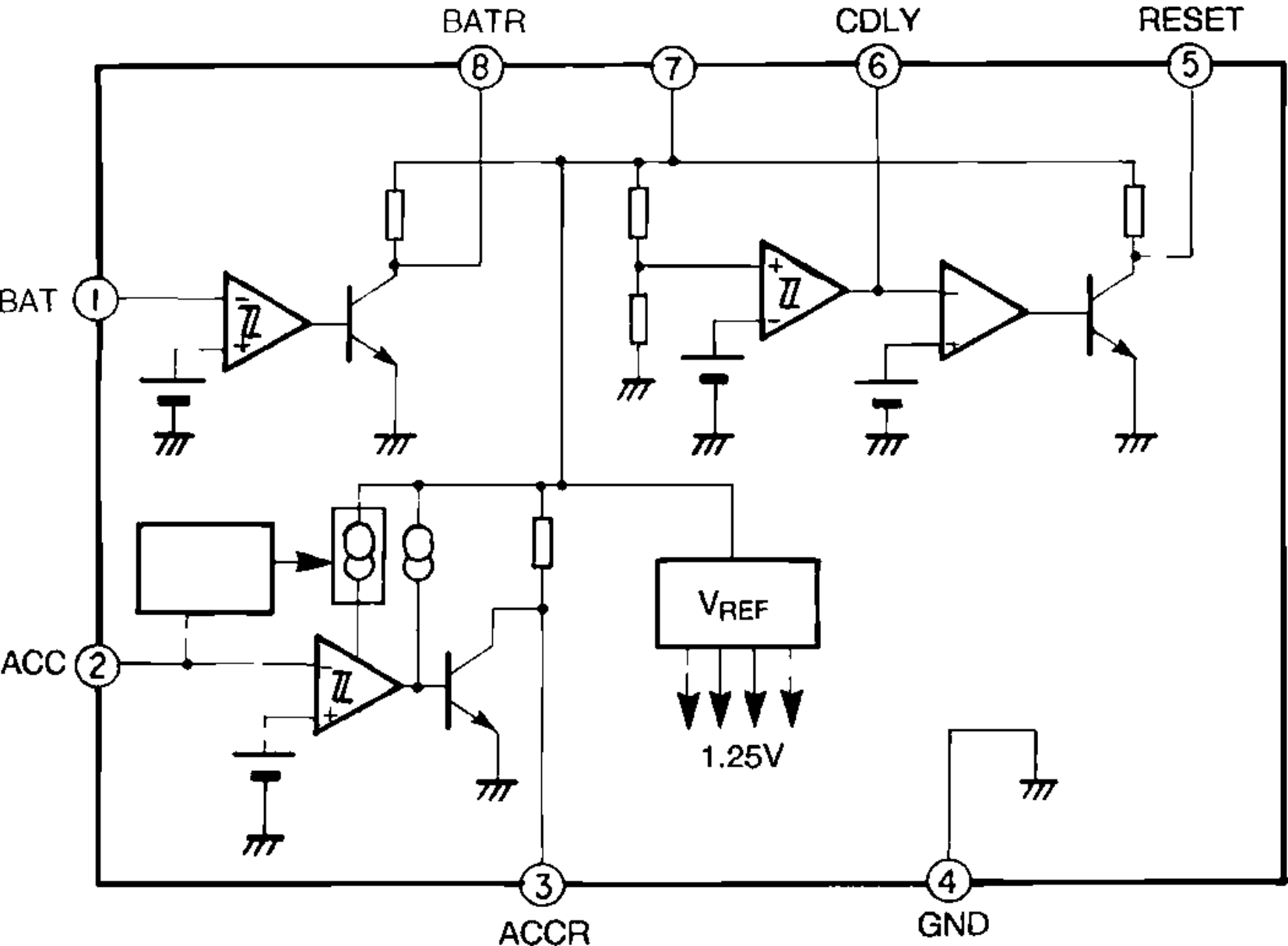

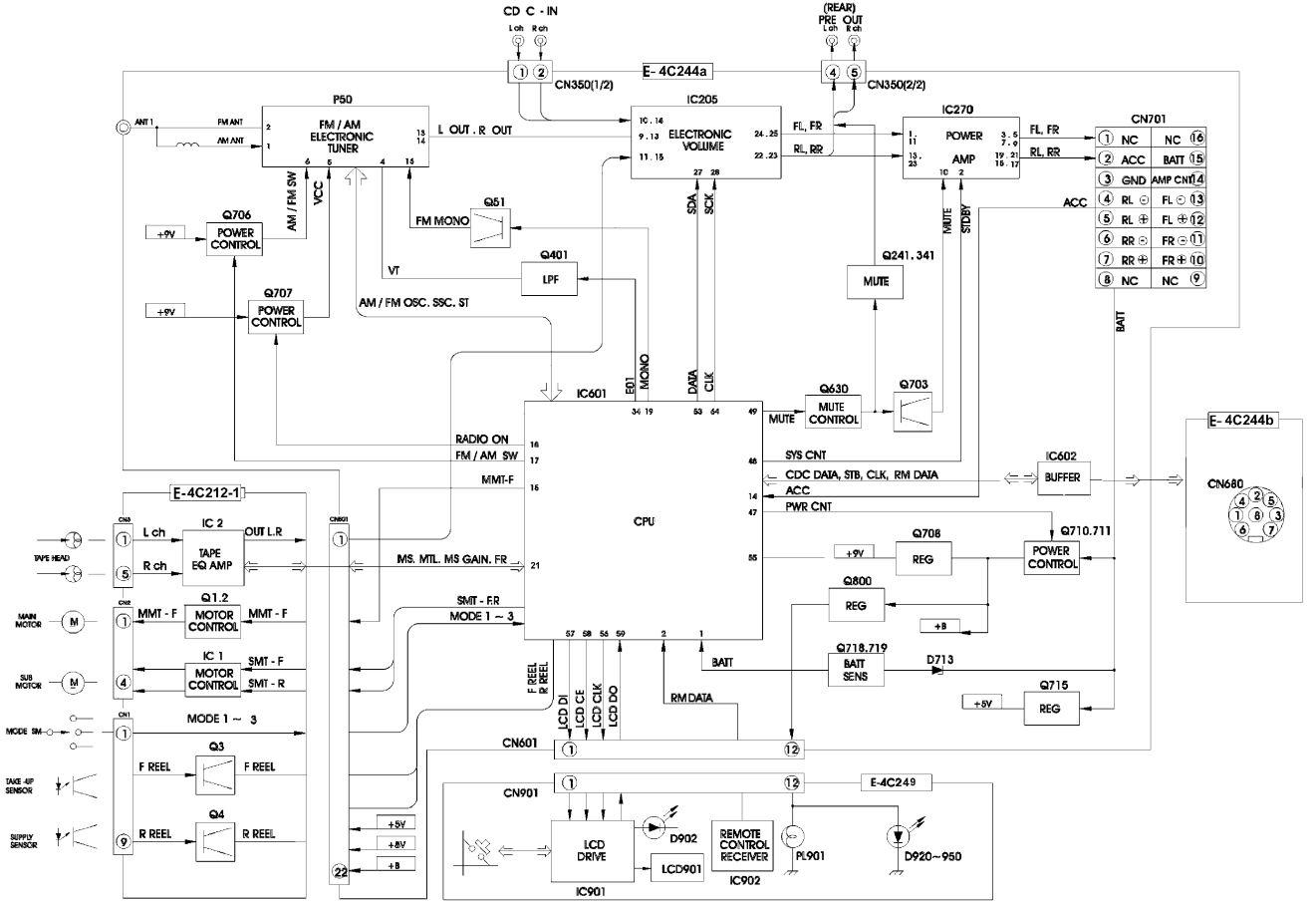
CD C - IN
L ch
R ch
(REAR)
PRE OUT
L ch
R ch
E- 4C244a
CN350(1/2)
CN350(2/2)
P50
FM / AM
ELECTRONIC
TUNER
ANT 1
FM ANT
AM ANT
L OUT . R OUT
IC205
ELECTRONIC
VOLUME
FL, FR
RL, RR
IC270
POWER
AMP
CN701
NC
ACC
GND
RL ⊖
RL ⊕
RR ⊖
RR ⊕
BATT
AMP CNT
FL ⊖
FL ⊕
FR ⊖
FR ⊕
Q706
POWER
CONTROL
+9V
AM / FM SW
VCC
Q51
FM MONO
Q401
LPF
VT
Q707
POWER
CONTROL
AM / FM OSC. SSC. ST
SDA
SCK
MUTE
STDBY
Q241. 341
MUTE
ACC
BATT
IC601
E01
MONO
DATA
CLK
Q630
MUTE
CONTROL
Q703
MUTE
E- 4C244b
CN680
RADIO ON
FM / AM SW
MMT-F
SYS CNT
CDC DATA, STB, CLK, RM DATA
ACC
PWR CNT
IC602
BUFFER
CPU
E- 4C212-1
IC 2
TAPE
EQ AMP
L ch
R ch
OUT L.R
TAPE HEAD
MS. MTL. MS GAIN. FR
Q708
REG
Q710.711
POWER
CONTROL
Q800
REG
+B
Q1.2
MOTOR
CONTROL
MMT - F
MAIN MOTOR
SMT - FR
MODE 1 ~ 3
IC 1
MOTOR
CONTROL
SMT - F
SMT - R
SUB MOTOR
BATT
Q718.719
BATT
SENS
D713
Q715
REG
+5V
F REEL
R REEL
LCD DI
LCD CE
LCD CLK
LCD DO
RM DATA
MODE SW
Q3
F REEL
TAKE-UP SENSOR
Q4
R REEL
SUPPLY SENSOR
CN601
CN901
E-4C249
LCD
DRIVE
IC901
D902
LCD901
REMOTE
CONTROL
RECEIVER
IC902
PL901
D920~950
+5V
+8V
+B

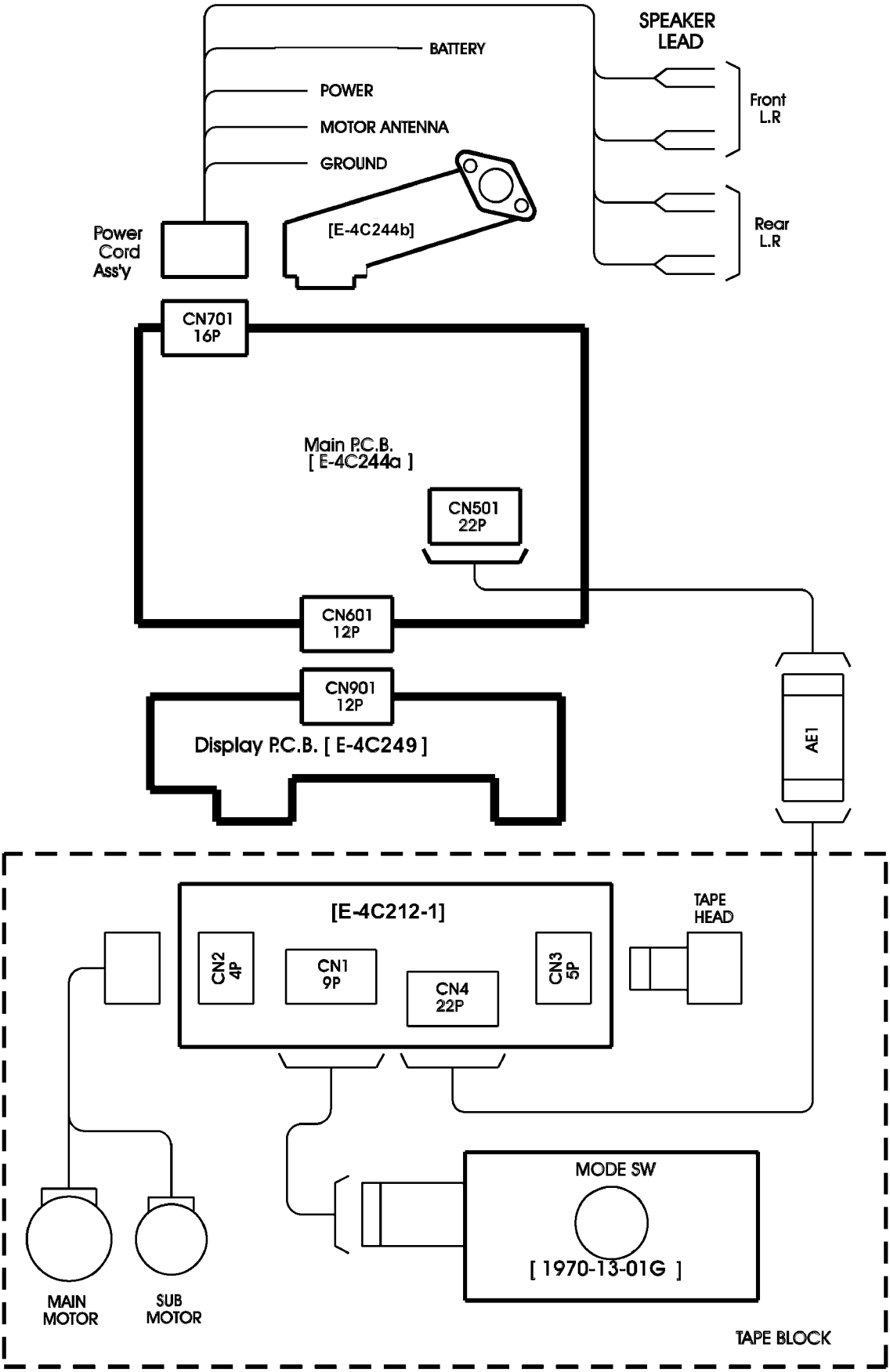
SPEAKER LEAD
BATTERY
POWER
MOTOR ANTENNA
GROUND
Front L.R
Rear L.R
Power Cord Ass'y
[E-4C244b]
CN701 16P
Main P.C.B. [E-4C244a]
CN501 22P
CN601 12P
CN901 12P
Display P.C.B. [E-4C249]
AE1
[E-4C212-1]
TAPE HEAD
CN2 4P
CN1 9P
CN4 22P
CN3 5P
MODE SW
[1970-13-01G]
MAIN MOTOR
SUB MOTOR
TAPE BLOCK

Order No. ACED021208C3

Service Manual

AUTOMOTIVE AFTERMARKET

CQ-R223W
CQ-R223WJ

Removable Face High-Power Cassette / RDS Receiver with Changer Control

Specifications *

General

Power Supply	: 12V DC (11V-16V) Test Voltage 14.4V, Negative ground
Maximum Power Output	: 50W x4 channels at 400Hz, Volume Control maximum
Power Output	: 20 W per channel into 4 ohms, 40 to 30,000Hz, at 3% THD
Tone Action	: Bass; ± 12 dB at 100Hz Treble; ± 12 dB at 10kHz
Current Consumption	: Less than 2.5 A (tape mode, 0.5W 4-Speaker)
Speaker Impedance	: 4 Ω (4-8Ω acceptable)
Pre-Amp Output Voltage	: 2.0V (CD Play mode; 1kHz 0dB)

AM Radio

Frequence Range	: 531 - 1602 kHz
Useable Sensitivity	: 28 dB/μV (25 μV/ S/N 20dB)

FM Stereo Radio

Frequency Range	: 87.5 - 108 MHz
Useable Sensitivity	: 12 dBf. (1.1μV/75 Ω, S/N 30 dB)
50 dB Quieting Sensitivity	: 17 dBf. (1.8 μV/75Ω)
Frequency Response	: 30 - 15,000Hz (± 3dB)
Alternate Channel Sensitivity	: 75dB
Stereo Separation	: 35 dB (1kHz)
Signal/Noise Ratio	: 70 dB (Mono)

Tape Player

Reproduction System	: 4- track, 2-program stereo
Tape Speed	: 1-7/8" /sec (4.76cm/sec)
FF/REW Time	: Less than 200 sec (C-60)
Frequency Responce	:35-14,000Hz(±3dB)
Wow and Fluter	: 0.12 % (WRMS)
Signal/Noise Ratio	: 52 dB

Dimentions **(W x H x D)	: 7" x 1-15/16" x 5-7/8" (178 x 50 x 150 mm)
Weight	: 3 lbs. 8 oz. (1.6 kg)

* Specifications and the design are subject to possible modification
** without notice due to improvements.
*** Dimentions and weight shown are approximate.
Above specifications comply with EIA standards.

⚠ WARNING

This service information is designed for experienced repair technicians only and is not designed for use by the general public. It does not contain warnings or cautions to advise non-technical individuals of potential dangers in attempting to service a product. Products powered by electricity should be serviced or repaired only by experienced professional technicians. Any attempt to service or repair the product or products dealt with in this service information by anyone else could result in serious injury or death.

IMPORTANT SAFETY NOTICE

There are special components used in this equipment which are important for safety. These parts are marked by ⚠ in the Schematic Diagrams, Circuit Board Diagrams, Exploded Views and Replacement Parts List. It is essential that these critical parts should be replaced with manufacturer's specified parts to prevent shock, fire or other hazards. Do not modify the original design without permission of manufacturer.

Panasonic®

© 2003 Matsushita Electric Industrial Co., Ltd. All rights reserved. Unauthorized copying and distribution is a violation of law.

CONTENTS

	Page
1 FEATURES	2
2 REPLACING THE FUSE	2
3 MAINTENANCE	2
4 RADIO ALIGNMENT	2
5 DIMENSIONS	2
6 WIRING CONNECTION	3
7 BLOCK DIAGRAM	4
8 WIRING DIAGRAM	5
9 SCHEMATIC DIAGRAM (Main Block)	9
10 SCHEMATIC DIAGRAM (Display Block)	11
11 SCHEMATIC DIAGRAM (Tape Block)	12
12 TERMINALS DESCRIPTION	13
13 PACKAGE AND IC BLOCK DIAGRAM	13
14 REPLACEMENT PARTS LIST (Unit)	16
15 EXPLODED VIEW (Unit)	21
16 REPLACEMENT PARTS LIST (Tape Player Parts)	22
17 EXPLODED VIEW (Tape Deck)	23
18 SCHEMATIC DIAGRAM for printing with letter size	24

1 FEATURES

- PLL (Phase Locked Loop) Synthesized Tuning.
- 1DIN Size Body with Cassette Player,AM/FM Tuner, Power AMP (50Wx4).
- 18-FM ,6-AM stations preset .
- Auto preset and scan function.
- CD Changer Control function.
- Radio Data System(PS.AF.CT.P1).
- Detachable face plate security.

2 REPLACING THE FUSE

Be sure to use a fuse of the specified rating (10A) when replacing a blown fuse. Fuses with higher capacity ratings,use of any substitute, or connection without a fuse may result in a fire hazard or damage to the unit.

3 MAINTENANCE

Your product is designed and manufactured to ensure a minimum of maintenance. Use a soft cloth for routine exterior cleaning. Never use benzine, or other solvent.

4 RADIO ALIGNMENT

Do not align the AM/FM package blocks. When the package block is necessary, it will be supplied already aligned at the factory.

5 DIMENSIONS

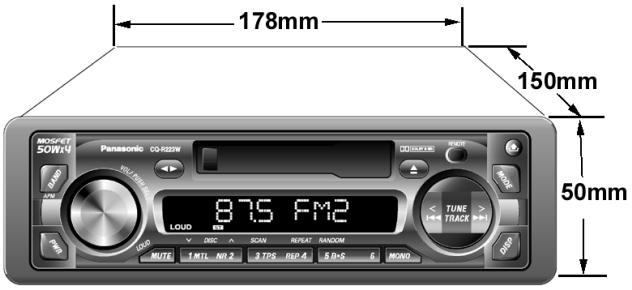

6 WIRING CONNECTION

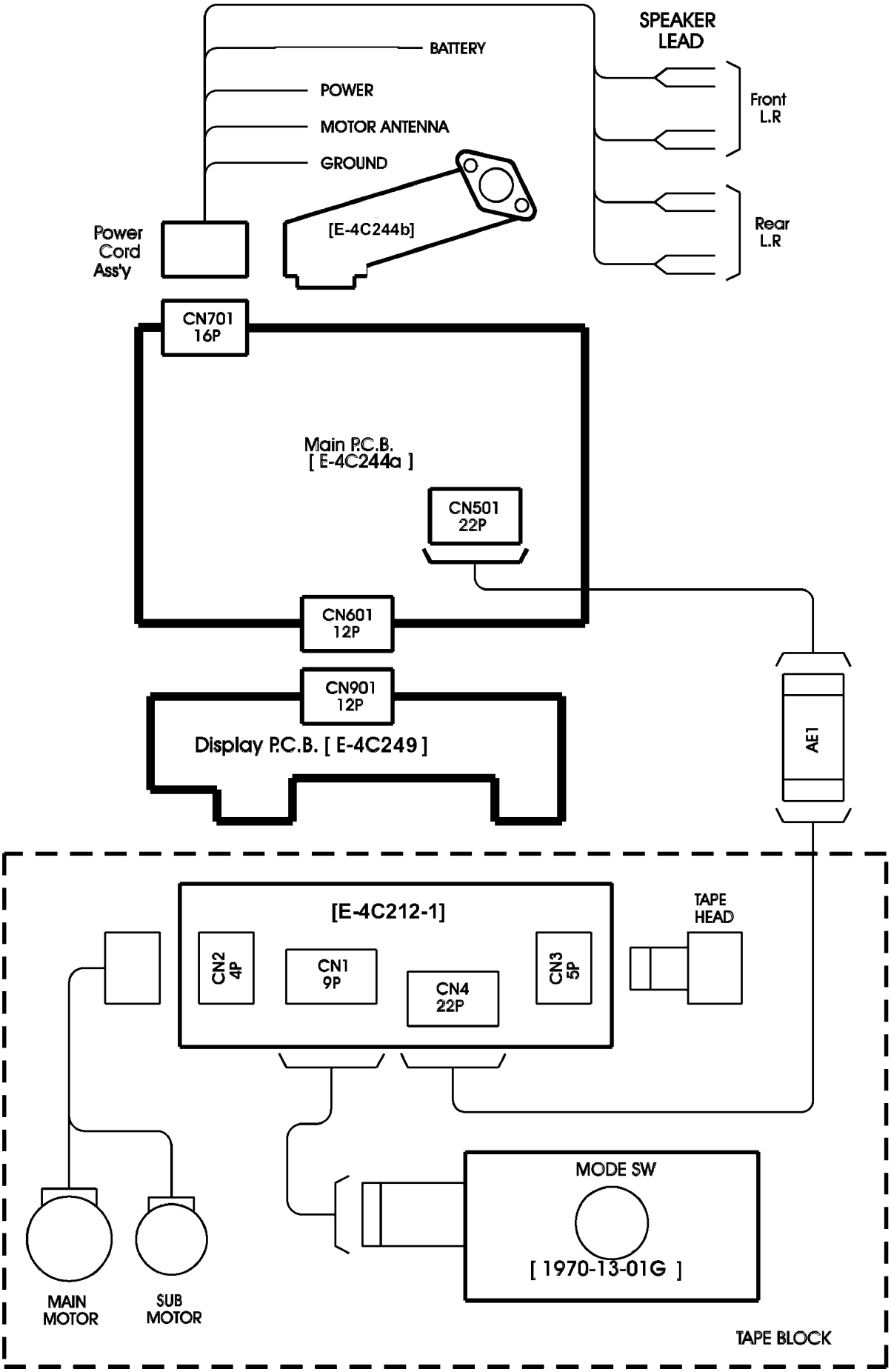

7 BLOCK DIAGRAM

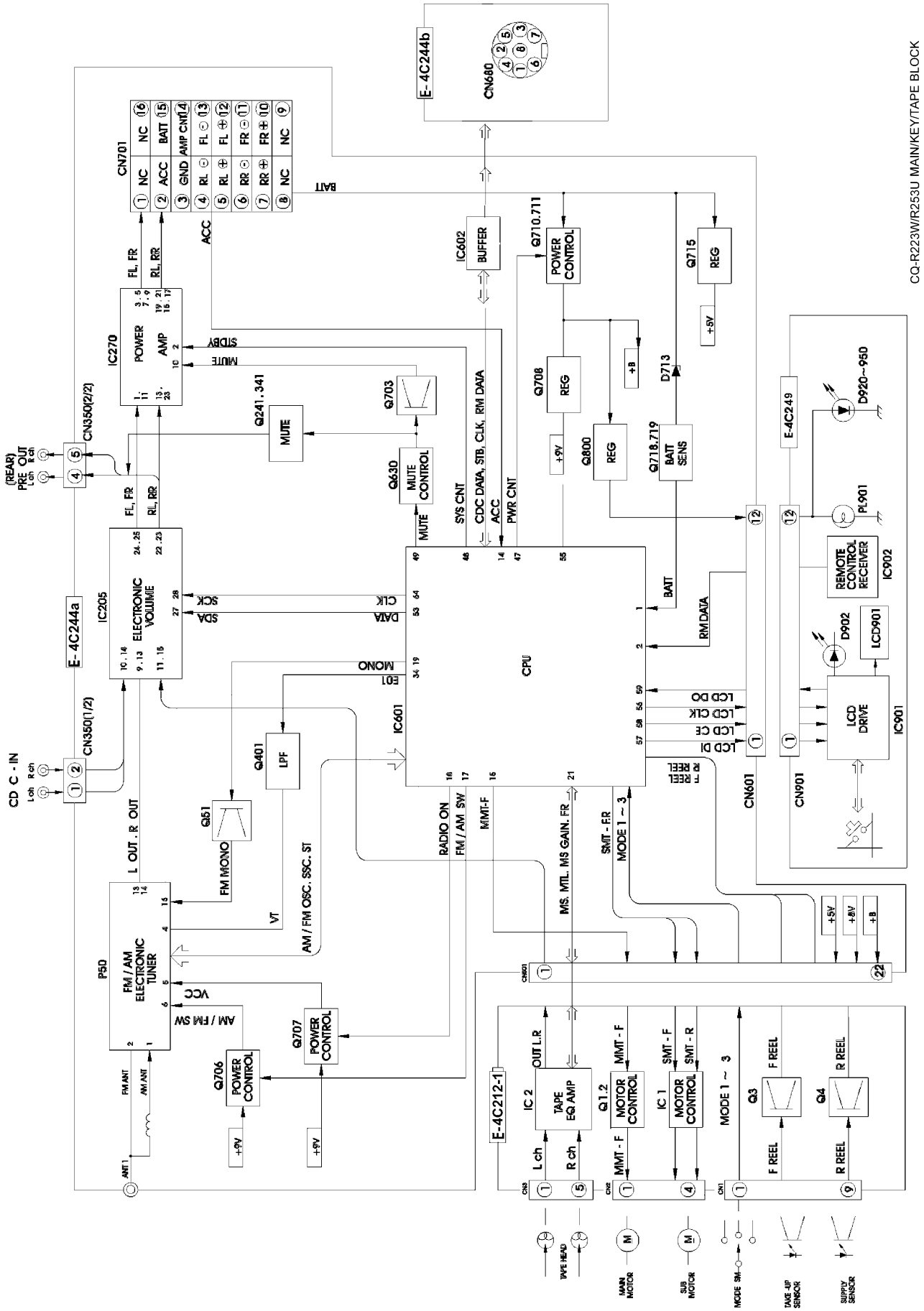

8 WIRING DIAGRAM

8.1. Main Block-1

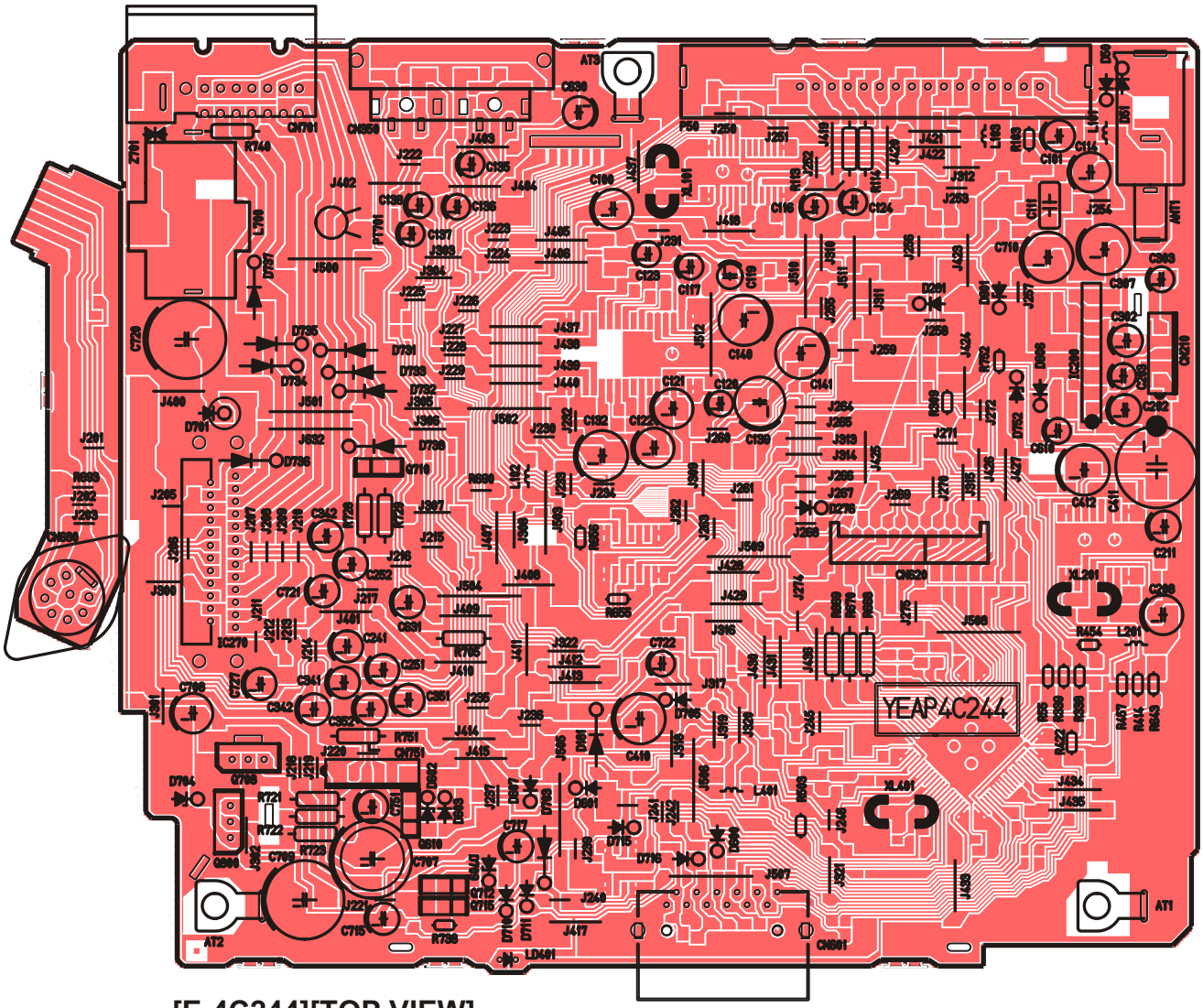

[E-4C244][TOP VIEW]

CQ-RD133N/143N/153N/243N/R253U/R223W MAIN PCB

8.2. Main Block-2

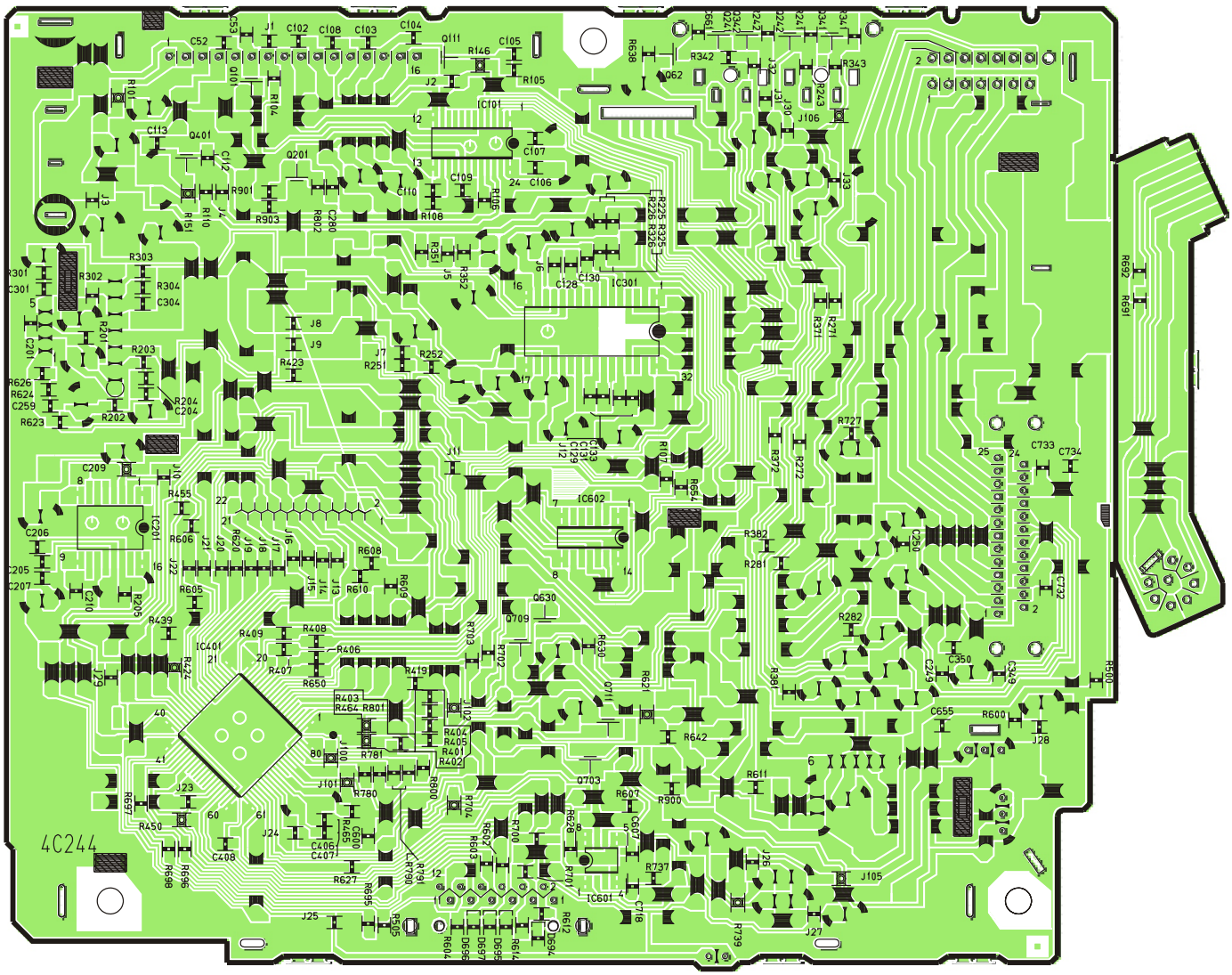

[E-4C244][BOTTOM VIEW]

CQ-RD133N/143N/153N/243N/R253U/R223W MAIN PCB

8.3. Display Block

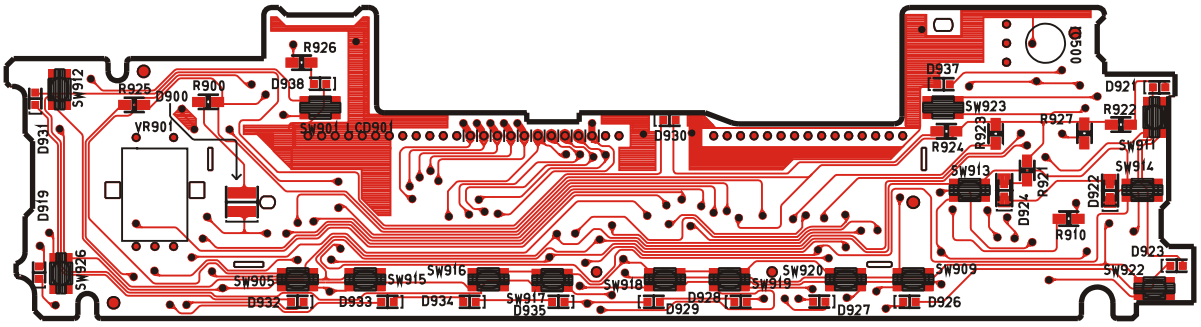

[E-4C249][TOP VIEW]

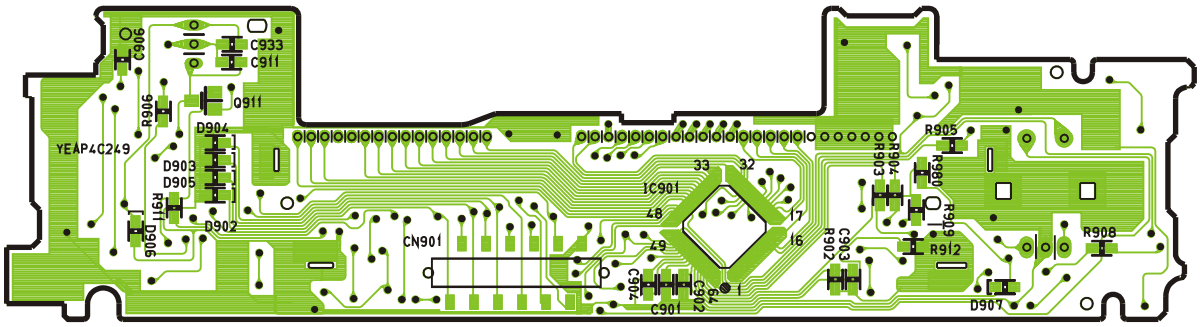

[E-4C249][BOTTOM VIEW]

CQ-R223W/R253U DISPLAY PCB

8.4. Tape Block

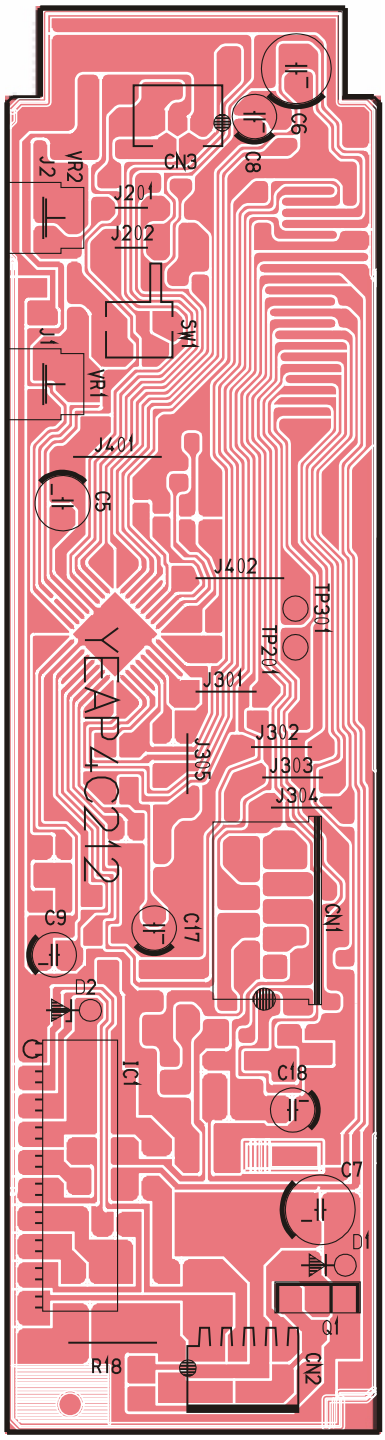

[E-4C212-1] [Top View]

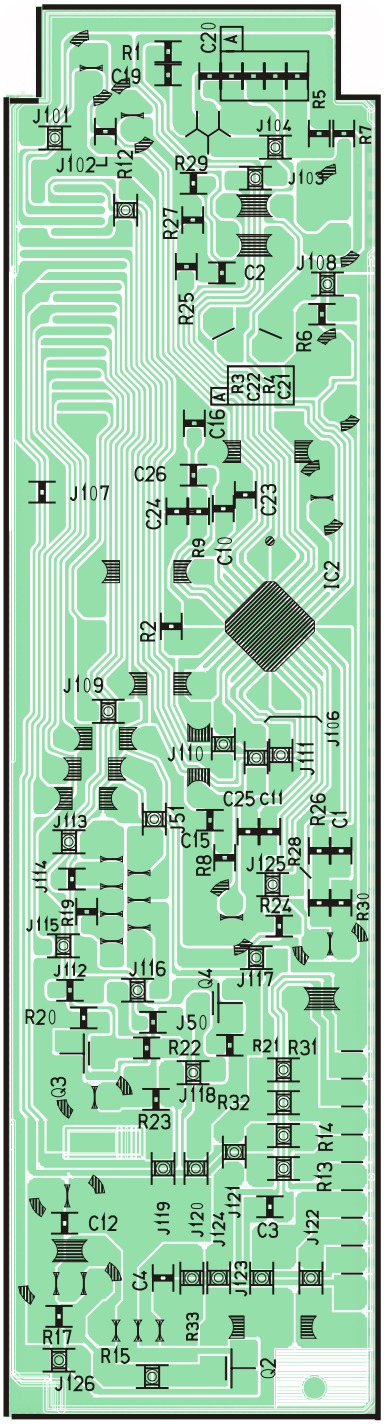

[E-4C212-1] [Bottom View]

CQ-R221U/RD243N TAPE PCB

9 SCHEMATIC DIAGRAM (Main Block)

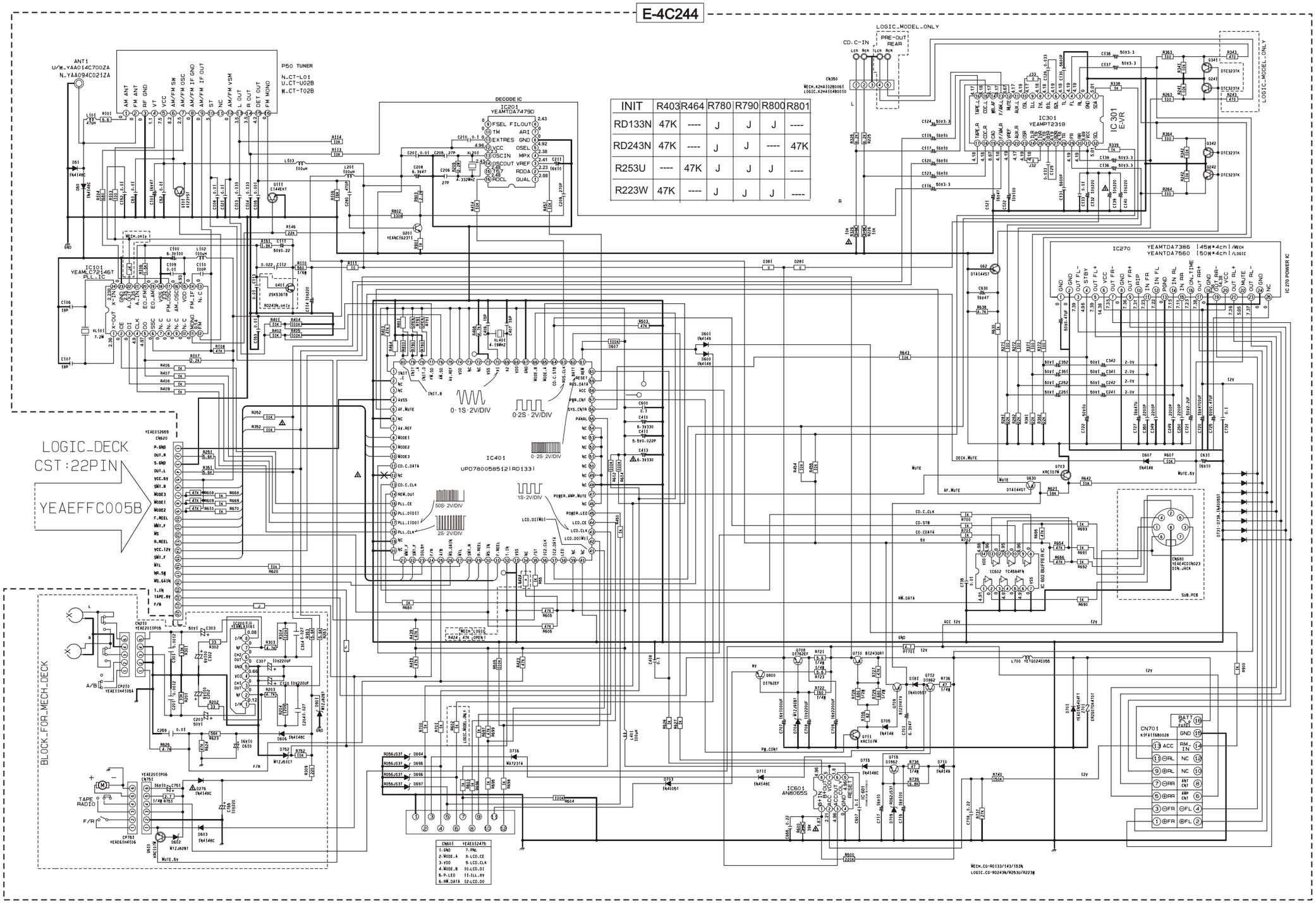

INIT	R403	R464	R780	R790	R800	R801
RD133N	47K	----	J	J	J	----
RD243N	47K	----	J	J	----	47K
R253U	----	47K	J	J	J	----
R223W	47K	----	J	J	J	----

CN601	YEAE012475
1.GND	7.PWL
2.MODE.A	8.LCD.CE
3.VDD	9.LCD.CLK
4.MODE.B	10.LCD.DI
5.P.LED	11.ILL.5V
6.AW.DATA	12.LCD.DO

CQ-RD133N/RD143N/RD153N/RD243N/R253U/R223W MAIN BLOCK

10 SCHEMATIC DIAGRAM (Display Block)

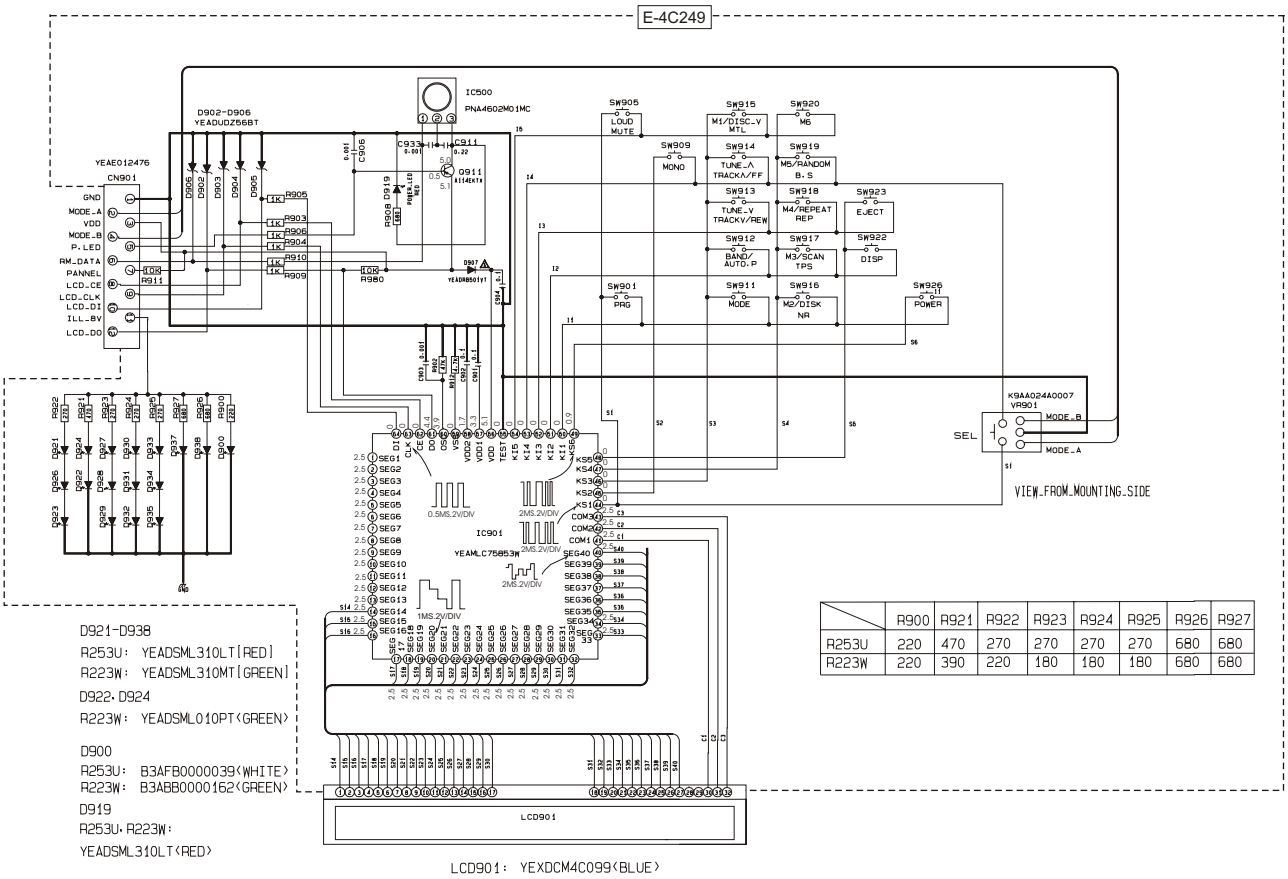

	R900	R921	R922	R923	R924	R925	R926	R927
R253U	220	470	270	270	270	270	680	680
R223W	220	390	220	180	180	180	680	680

CQ-R223W/R223WJ/CQ-R253U DISPLAY BLOCK

11 SCHEMATIC DIAGRAM (Tape Block)

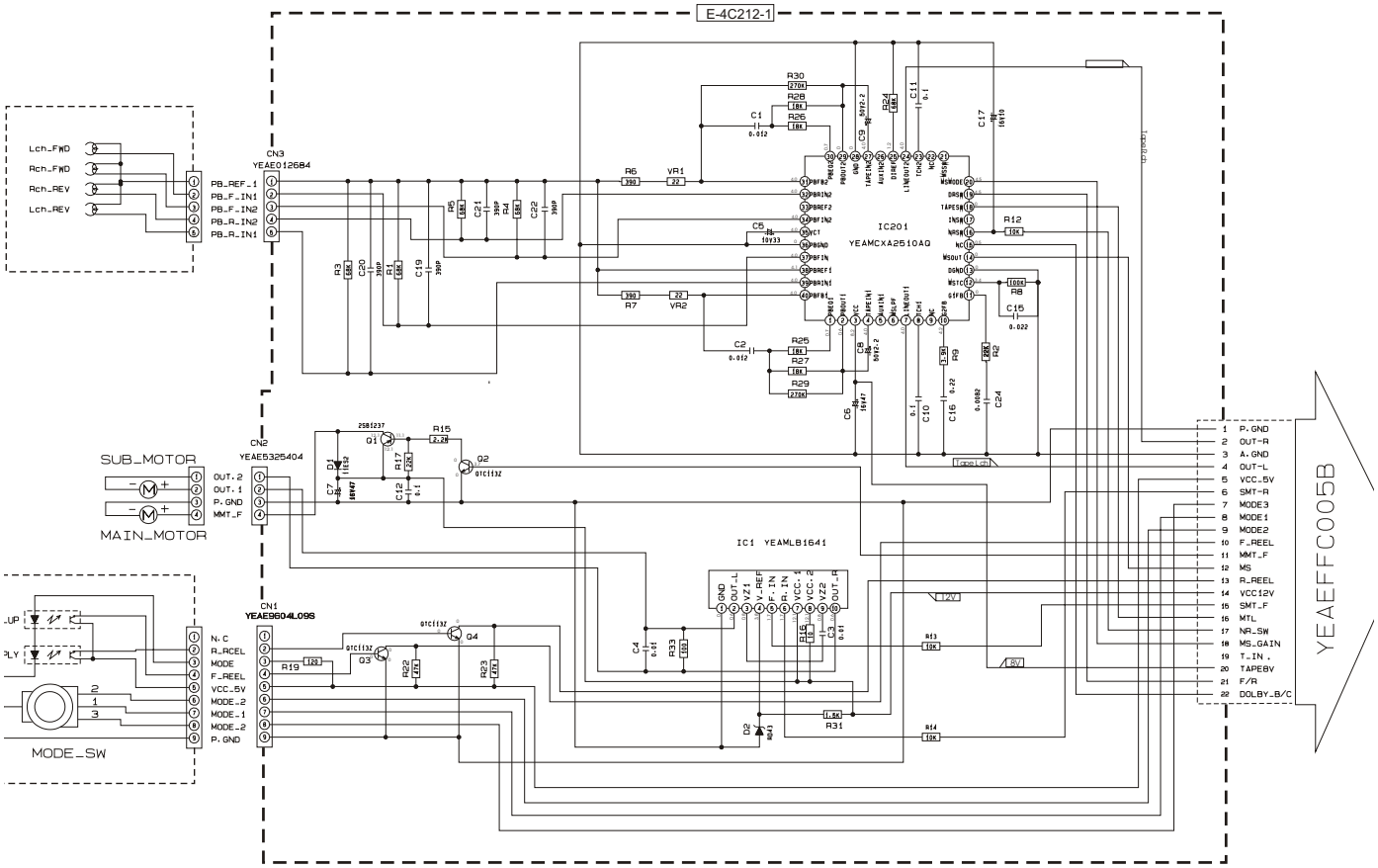

CQ-R221U/RD243W TAPE BLOCK

12 TERMINALS DESCRIPTION

12.1. Main Block

Ref. No.	Part No.	Part Name & Description	Remarks	
IC401 UPD780058518				
			I/O	Vol.(V)
1	INIT C	Specification setup	I	4.87
2	NC	No connection	O	0
3	NC	No connection	O	0
4	AVSS	Ground	_	0
5	AF MUTE	AF mute output	O	4.92
6	NC	No connection	O	0
7	AV REF	+5V power supply	_	4.92
8	MODE1	MODE1	I	0
9	MODE2	MODE2	I	0
10	MODE3	MODE3	I	0
11	CD.C.DATA	CD changer data	SI	0
12	NC	No connection	SO	0
13	CD.C.CLK	CD changer clock	SCK I	0
14	REM OUT	Remocon data output	O	4.92
15	PLL CE	PLL chip enable	O	0
16	PLL DO(MI)	PLL data	SI	4.99
17	PLL DI(MO)	PLL data	SO	0
18	PLL CLK	PLL clock	SCK O	4.93
19	NC	No connection	O	0
20	NC	No connection	O	0.39
21	MMT F	MMT F	O	0.55
22	SMT F	SMT F	O	0.61
23	DOLBY	DOLBY	O	0.09
24	F/R	FF/REW detection	I	0.46
25	A/B	A/B detection	I	0.42
26	MS GAIN	MS gain	O	0.03
27	MTL	MTL output	O	0
28	SMT R	SMT R	O	0
29	R REEL	R REEL	O	0
30	MS IN	MS detection	I	0
31	F REEL	F REEL	O	0
32	TAPE IN	TAPE IN detection	I	1.42
33	VSS 1	VSS 1	_	0
34	NC	No connection	O	4.98
35	ST	FM stereo detection	I	4.97
36	E VOL CLK	Electronic volume clock	O	4.99
37	E VOL DATA	Electronic volume data	I/O	4.99
38	SECURITY LED	Security LED	O	0
39	NC	No connection	O	0
40	NC	No connection	O	0
41	LCD DI(MO)	LCD driver data output	O	4.7
42	LCD DO(MI)	LCD driver data input	I	4.37
43	LCD CLK	LCD clock	O	4.84
44	LCD CE	LCD chip enable	O	0.26
45	POWER LED	Power LED	O	0.06
46	NC	No connection	O	0
47	MUTE	Mute output	O	0
48	NC	No connection	O	0
49	NC	No connection	O	0
50	NC	No connection	O	0
51	NC	No connection	O	0
52	NC	No connection	O	0
53	NC	No connection	O	0
54	NC	No connection	O	0
55	PANEL	Panel in detection	I	4.41
56	SYS CNT	System CNT	O	4.94
57	POWER CNT	System power control	O	4.91
58	ACC SENS	ACC leaver detection	I	4.98
59	NC/RDS DATA	No connection/RDS data input	O/I	2.47
60	RESET	Reset input	I	4.97
61	REM IN	Remocon data input	I	5.5
62	BATT SENS	Battery level detection	I	4.98
63	NC/RDS CLK	No connection/RDS clock input	O/I	2.48
64	CD C STB	CD changer strobe	I	0
65	MODE A	Rotary mode A	I	4.8
66	MODE B	Rotary mode B	I	0
67	VSS0	Ground	_	0
68	VDD1	+5V power supply	_	4.95
69	X2	Crystal oscillator	O	0
70	X1	Crystal oscillator	I	0
71	VPP	VPP	I	0
72	NC	No connection	O	0
73	NC	No connection	I	4.92
74	AVD0	+5V power supply	_	4.95
75	AV REF	A/D Convetor standard volt	_	4.95
76	AM SD	AM BAND SD input	I	0.47
77	FM SD	fM BAND SD input	I	0.46
78	INIT D	Specification setup	I	0
79	INIT A	Specification setup	I	0
80	INIT B	Specification setup	I	4.93

12.2. Display Block

Ref. No.	Part No.	Description	I/O	Vol.(V)
IC901 YEAMLC75853W				
1~34	SEG1~34	LCD segment	O	2.5
35~39	NC	No connection	_	_
40~43	COM1~4	LCD common	O	2.5
44~49	KS1~6	Key data output	O	0.9
50~54	K11~5	Key data input	I	0.0
55	TEST	(Connecting to ground)	_	0.0
56	VDD	+5V power supply	_	5.1
57	VDD1	Ground through capacitor	_	3.3
58	VDD2	Ground through capacitor	_	1.7
59	Vss	Ground	_	0.0
60	OSC	CR oscillator	_	3.9
61	DO	Key data output	O	4.4
62	CE	Chip enable	I	0.0
63	CLK	LCD clock	I	0.0
64	D1	LCD data input	I	0.0

13 PACKAGE AND IC BLOCK DIAGRAM

13.1. Main Block

P50 CT-T02B

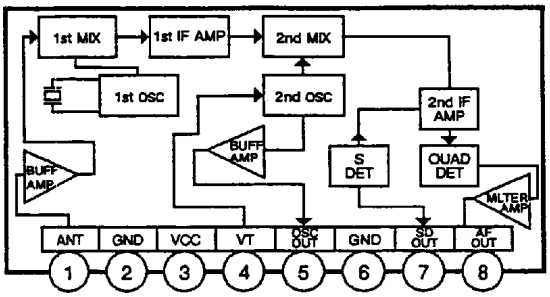

IC 201 YEAMTDA7479D

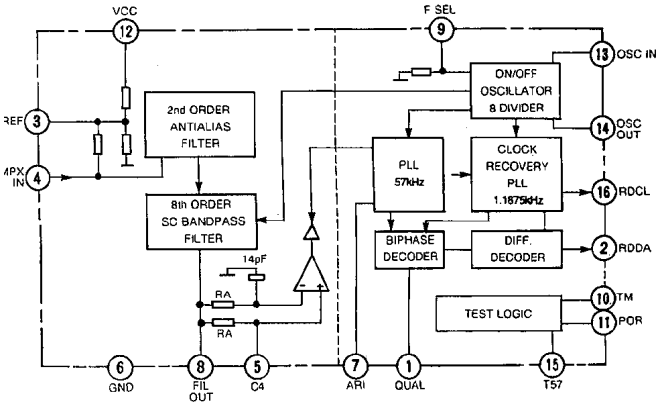

IC270 C1EA00000026

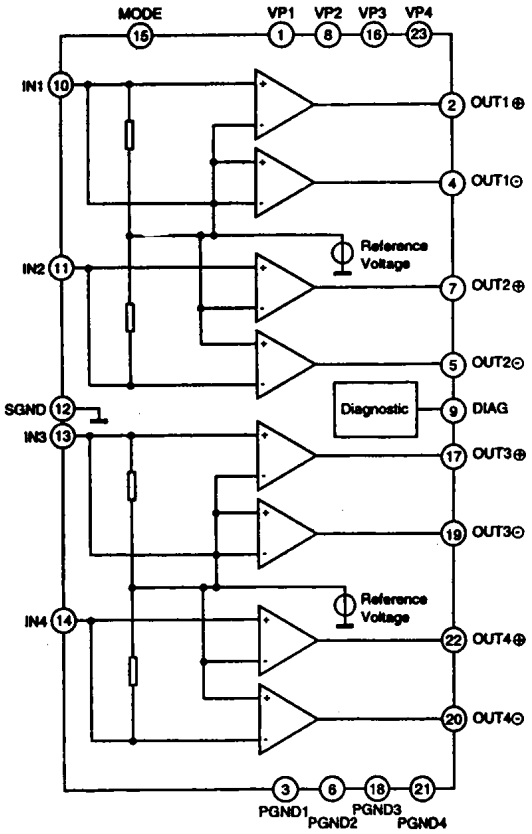

IC602 YEAMTC4584FN

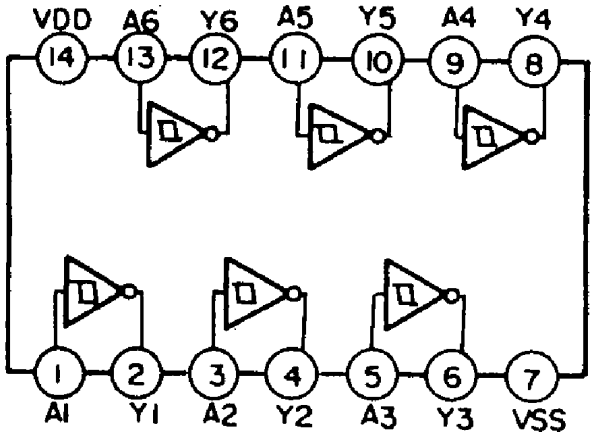

IC601 AN8065S-E1

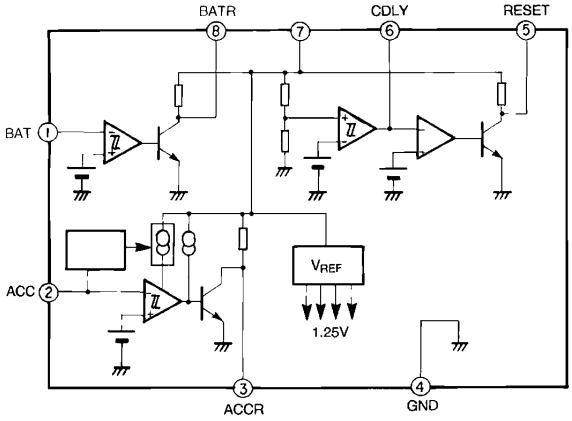

IC301 YEAMPT2318T

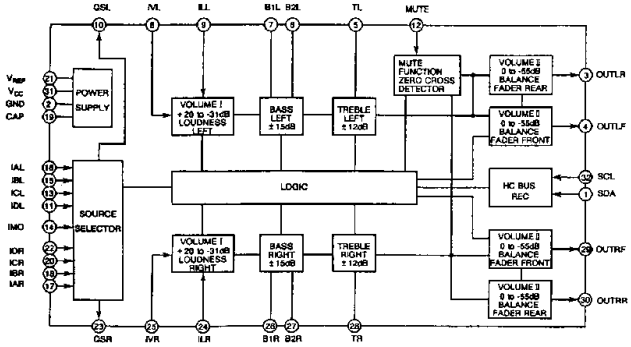

13.2. Display Block

IC500 PNA4602M01MC

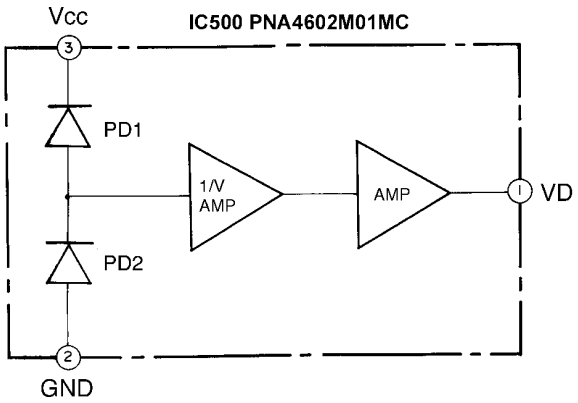

13.3. Tape Block

IC1 YEAMLB1641

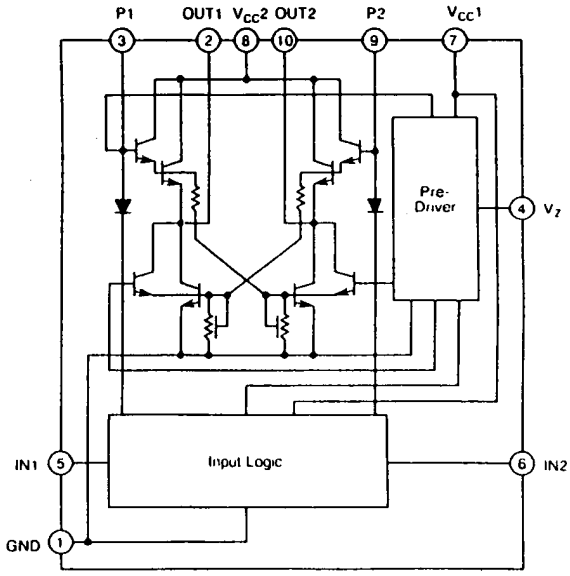

IC2 YEAMCXA2510Q

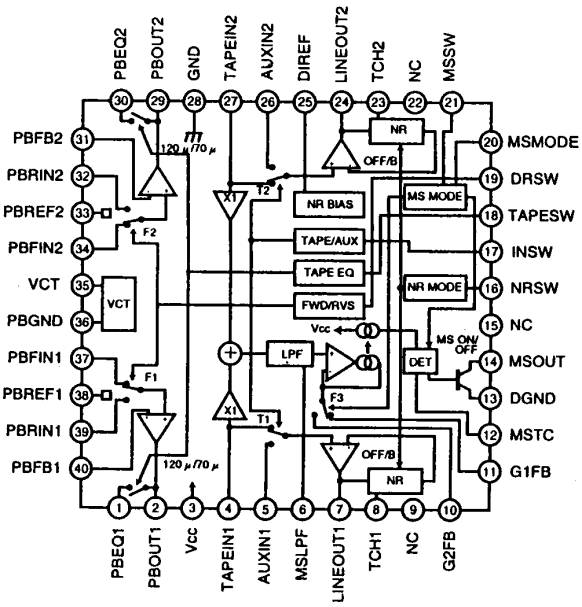

14 REPLACEMENT PARTS LIST (Unit)

Note:

1. Be sure to make your orders of replacement parts according to this list.
2. Important safty notice: Component , indentified by ⚠ mark have special characteristics important for safety. when replacing any of these components, use only manufacturer's specified parts.
3. Location keys in the remarks column indicates the general location of the parts shown in the exploded drawing. as in a load map.
4. The marking (RTL) indicates that Retention Time is **limited** for this item. After the discontinuation of assembly in production, the item will continue to be availability is dependent on the type of assembly, and in accordance with the laws governing part and product retention. Aft the end of this period, the assembly will no longer be available.
5. "T" marks in remarks colum are indicated supply parts of TAMACO.

- **Order intake period is basically six months after the first shipment**

Ref. No.	Part No.	Part Name & Description	Remarks
1. IC's and Transistors			
MAIN BLOCK [E-4C244]			
Q62	YEANA144EKT	Transistor	T
Q101	YEANA123YKT	Transistor	T
Q111	YEANC144EKT	Transistor	T
Q241	YEANDTC323TK	Transistor	T
Q242	YEANDTC323TK	Transistor	T
Q341	YEANDTC323TK	Transistor	T
Q342	YEANDTC323TK	Transistor	T
Q610	YEANKRC107M	Transistor	T
Q630	YEANA144EKT	Transistor	T
Q703	YEANC144EKT	Transistor	T
Q708	YEAND1762EF	Transistor	T
Q709	YEANB123YKTX	Transistor	T
Q710	YEANB1243QRT	Transistor	T
Q711	YEANC114YKT	Transistor	T
Q712	YEAND1862T	Transistor	T
Q715	YEAND1862T	Transistor	T
Q800	YEAND1762EF	Transistor	T
IC101	YEAMLC72146T	IC	T
IC301	YEAMPT2318T	IC	T
IC601	AN8065S-E1	IC	T
IC602	YEAMTC4584FN	IC	T
P50	CT-T02B	Tuner	T
IC200	YEAMLA3161	IC	T
IC270	C1EA00000029	IC	T
IC401	UPD780058518	IC	T
DISPLAY BLOCK [E-4C249]			
Q911	YEANA114EKTX	Transistor	T
IC901	YEAMLC75853W	IC	T
IC500	PNA4602M01MC	IC	T
TAPE BLOCK [E-4C212-1]			
IC1	YEAMLB1641	IC	T
IC2	YEAMCXA2510Q	IC	T
Q1	YEANB1237QRT	Transistor	T
Q2	YEANC113ZKTX	Transistor	T
Q3	YEANC113ZKTX	Transistor	T
Q4	YEANC113ZKTX	Transistor	T
2. Diodes			
MAIN BLOCK [E-4C244]			
D50	YEAD1N4148C	Diode	T
D51	YEAD1N4148C	Diode	T
D181	YEAD1N4005ST	Silicon Diode	T
D600	YEAD1N4148C	Diode	T
D601	YEAD1S2473T	Diode	T
D602	YEADMTZJ82BT	Zener Diode	T
D603	YEAD1N4148C	Diode	T
D606	YEAD1N4148C	Diode	T
D607	YEAD1N4148C	Diode	T
D694	YEADUDZS56BT	Zener Diode	T
D695	YEADUDZS56BT	Zener Diode	T
D696	YEADUDZS56BT	Zener Diode	T
D697	YEADUDZS56BT	Zener Diode	T
D701	YEAD1N5404FT	Diode	T
D703	YEAD1N4005ST	Silicon Diode	T
D704	YEADMTZJ91BT	Zener Diode	T
D705	YEAD1N4148C	Diode	T
D709	YEADRD62JS3T	Zener Diode	T
D710	YEAD1N4148C	Diode	T
D711	YEAD1N4148C	Diode	T
D715	YEAD1N4148C	Diode	T
D716	MA723TA	Diode	T
D731	YEAD1N4005ST	Silicon Diode	T
D732	YEAD1N4005ST	Silicon Diode	T
D733	YEAD1N4005ST	Silicon Diode	T
D734	YEAD1N4005ST	Silicon Diode	T
D735	YEAD1N4005ST	Silicon Diode	T
D736	YEAD1N4005ST	Silicon Diode	T
D737	YEAD1N4005ST	Silicon Diode	T
D738	YEAD1N4005ST	Silicon Diode	T
D752	YEADMTZJ51CT	Zener Diode	T
D900	B3ACB0000162	LED (GREEN)	T
D901	YEADMTZJ82BT	Zener Diode	T
D902	YEADUDZS56BT	Zener Diode	T
D903	YEADUDZS56BT	Zener Diode	T
D904	YEADUDZS56BT	Zener Diode	T
D905	YEADUDZS56BT	Zener Diode	T
D906	YEADUDZS56BT	Zener Diode	T
D907	YEADRB501VT	Diode	T
D919	YEADSML310FT	LED(GREEN)	T
D921	YEADSML310FT	LED(GREEN)	T
D922	YEADSML310FT	LED(GREEN)	T
D923	YEADSML310FT	LED(GREEN)	T
D924	YEADSML310FT	LED(GREEN)	T
D926	YEADSML310FT	LED(GREEN)	T
D927	YEADSML310FT	LED(GREEN)	T
D928	YEADSML310FT	LED(GREEN)	T
D929	YEADSML310FT	LED(GREEN)	T
D930	YEADSML310FT	LED(GREEN)	T
D931	YEADSML310FT	LED(GREEN)	T
D932	YEADSML310FT	LED(GREEN)	T
D933	YEADSML310FT	LED(GREEN)	T
D934	YEADSML310FT	LED(GREEN)	T
D935	YEADSML310FT	LED(GREEN)	T
D937	YEADSML310FT	LED(GREEN)	T
D938	YEADSML310FT	LED(GREEN)	T
Z701	ERZG07DK470T	ZNR	T
TAPE BLOCK [E-4C212-1]			
D1	YEAD1A3T	Diode	T
D2	YEADMTZ43BT	Diode	T
3. Capacitors			
MAIN BLOCK [E-4C244]			
C52	ECUV1H103KBN	Ceramic 0.01MFD 50WV	T
C53	ECUV1H103KBN	Ceramic 0.01MFD 50WV	T
C100	ECEA1AKS101IV	Electrolytic 100MFD 10WV	T
C101	ECEA1CKS470IV	Electrolytic 47MFD 16WV	T
C102	ECUV1H103KBN	Ceramic 0.01MFD 50WV	T
C103	ECUV1H333KBN	Ceramic 0.033MFD 50WV	T
C104	ECUV1H333KBN	Ceramic 0.033MFD 50WV	T
C105	ECUV1H102KBN	Ceramic 0.001MFD 50WV	T
C106	ECUV1H180JCN	Ceramic 18PF 50WV	T

Ref. No.	Part No.	Part Name & Description	Remarks
C107	ECUV1H180JCN	Ceramic 18PF 50WV	T
C108	ECUV1H103KBN	Ceramic 0.01MFD 50WV	T
C109	ECUV1H103KBN	Ceramic 0.01MFD 50WV	T
C110	ECUV1H101KBN	Ceramic 100pF 50WV	T
C111	ECQV1H224JL2	Plastic Film 0.22MFD 50WV	T
C112	ECUV1H223KBN	Ceramic 0.022MFD 50WV	T
C113	ECUV1H103KBN	Ceramic 0.01MFD 50WV	T
C114	ECEA1AU221I	Electrolytic 220MFD 10WV	T
C116	ECEA1HKS3R3IV	Electrolytic 3.3MFD 50WV	T
C117	ECEA1CKS100IV	Electrolytic 10MFD 16WV	T
C119	ECEA1CKS100IV	Electrolytic 10MFD 16WV	T
C120	ECEA1CKS100IV	Electrolytic 10MFD 16WV	T
C121	ECEA1CKS470IV	Electrolytic 47MFD 16WV	T
C122	ECEA1AKS101IV	Electrolytic 100MFD 10WV	T
C123	ECEA1CKS100IV	Electrolytic 10MFD 16WV	T
C124	ECEA1HKS3R3IV	Electrolytic 3.3MFD 50WV	T
C128	ECUV1H333KBN	Ceramic 0.033MFD 50WV	T
C129	ECUV1H333KBN	Ceramic 0.033MFD 50WV	T
C130	ECUV1H562KBN	Ceramic 5600pF 50WV	T
C131	ECUV1H562KBN	Ceramic 5600pF 50WV	T
C132	ECEA1AKS221IV	Electrolytic 220MFD 10WV	T
C133	ECUV1H103KBN	Ceramic 0.01MFD 50WV	T
C135	ECEA1HKS3R3IV	Electrolytic 3.3MFD 50WV	T
C136	ECEA1HKS3R3IV	Electrolytic 3.3MFD 50WV	T
C137	ECEA1HKS3R3IV	Electrolytic 3.3MFD 50WV	T
C138	ECEA1HKS3R3IV	Electrolytic 3.3MFD 50WV	T
C201	ECUV1H122KBN	Ceramic 0.0012MFD 50WV	T
C202	ECEA1AKS101IV	Electrolytic 100MFD 10WV	T
C203	ECEA1HKS010IV	Electrolytic 1MFD 50WV	T
C204	ECUV1H273KBN	Ceramic 0.027MFD 50WV	T
C205	ECUV1H270JCN	Ceramic 27PF 50WV	T
C206	ECUV1H270JCN	Ceramic 27PF 50WV	T
C207	ECUV1H103KBN	Ceramic 0.01MFD 50WV	T
C208	ECEA1AKS470IV	Electrolytic 47MFD 10WV	T
C209	ECUV1H271JCN	Ceramic 270pF 50WV	T
C210	ECUV1H104KBN	Ceramic 0.1MFD 50WV	T
C211	ECEA1CKS100IV	Electrolytic 10MFD 16WV	T
C241	ECEA1HKS010IV	Electrolytic 1MFD 50WV	T
C242	ECEA1HKS010IV	Electrolytic 1MFD 50WV	T
C249	ECUV1H222KBN	Ceramic 2200pF 50WV	T
C250	ECUV1H222KBN	Ceramic 2200pF 50WV	T
C251	ECEA1HKS010IV	Electrolytic 1MFD 50WV	T
C252	ECEA1HKS010IV	Electrolytic 1MFD 50WV	T
C259	ECUV1H103KBN	Ceramic 0.01MFD 50WV	T
C280	ECUV1H471KBN	Ceramic 470PF 50WV	T
C301	ECUV1H122KBN	Ceramic 0.0012MFD 50WV	T
C302	ECEA1AKS101IV	Electrolytic 100MFD 10WV	T
C303	ECEA1HKS010IV	Electrolytic 1MFD 50WV	T
C304	ECUV1H273KBN	Ceramic 0.027MFD 50WV	T
C307	ECEA1AKS221IV	Electrolytic 220MFD 10WV	T
C341	ECEA1HKS010IV	Electrolytic 1MFD 50WV	T
C342	ECEA1HKS010IV	Electrolytic 1MFD 50WV	T
C349	ECUV1H222KBN	Ceramic 2200pF 50WV	T
C350	ECUV1H222KBN	Ceramic 2200pF 50WV	T
C351	ECEA1HKS010IV	Electrolytic 1MFD 50WV	T
C352	ECEA1HKS010IV	Electrolytic 1MFD 50WV	T
C406	ECUV1H150JCN	Ceramic 15pF 50WV	T
C407	ECUV1H150JCN	Ceramic 15pF 50WV	T
C408	ECUV1H104KBN	Ceramic 0.1MFD 50WV	T
C410	ECEA0JKS331IV	Electrolytic 330MFD 6.3WV	T
C411	YEECFYH0H223	Electrolytic 22000MFD 5.5WV	T
C600	ECUV1H104KBN	Ceramic 0.1MFD 50WV	T
C607	ECUV1H104KBN	Ceramic 0.1MFD 50WV	T
C610	ECEA1CKS100IV	Electrolytic 10MFD 16WV	T
C630	ECEA1CKS470IV	Electrolytic 47MFD 16WV	T
C631	ECEA1HKS100IV	Electrolytic 10MFD 50WV	T
C655	ECUV1H224ZFN	Ceramic 0.22MFD 50WV	T
C701	ECA1CM222B	Electrolytic 0.0022MFD 16WV	T
C707	ECEA1CU102YB	Electrolytic 1000MFD 16WV	T
C708	ECEA1AU221I	Electrolytic 220MFD 10WV	T
C710	ECEA1AKS221IV	Electrolytic 220MFD 10WV	T
C715	ECA1CHG101I	Electrolytic 100MFD 16WV	T
C717	ECEA1CKS100IV	Electrolytic 10MFD 16WV	T

Ref. No.	Part No.	Part Name & Description	Remarks
C718	ECUV1H224ZFN	Ceramic 0.22MFD 50WV	T
C720	ECA1CDT332Y	Ceramic 0.0033MFD 16WV	T
C721	ECEA1HKS2R2IV	Electrolytic 2.2MFD 50WV	
C722	ECEA1HKS010IV	Electrolytic 1MFD 50WV	T
C727	ECEA1CKS470IV	Electrolytic 47MFD 16WV	T
C732	ECUV1H104KBN	Ceramic 0.1MFD 50WV	T
C751	ECEA1CKS100IV	Electrolytic 10MFD 16WV	T
DISPLAY BLOCK [E-4C249]			
C901	ECUV1H104KBN	Ceramic 0.1MFD 50WV	T
C902	ECUV1H104KBN	Ceramic 0.1MFD 50WV	T
C903	ECUV1H102KBN	Ceramic 0.001MFD 50WV	T
C904	ECUV1H104KBN	Ceramic 0.1MFD 50WV	T
C906	ECUV1H104KBN	Ceramic 0.1MFD 50WV	T
C911	ECUV1H224KBN	Ceramic 0.22MFD 50WV	T
C933	ECUV1H102KBN	Ceramic 0.001MFD 50WV	T
TAPE BLOCK [E-4C212-1]			
C1	ECUV1H103KBN	Ceramic 0.01MFD 50WV	T
C2	ECUV1H103KBN	Ceramic 0.01MFD 50WV	T
C3	ECUV1H103KBN	Ceramic 0.01MFD 50WV	T
C4	ECUV1H103KBN	Ceramic 0.01MFD 50WV	T
C5	ECEA1AKS330I	Electrolytic 33MFD 10WV	T
C6	ECEA1CKS470I	Electrolytic 47MFD 16WV	T
C7	ECEA1CKS470I	Electrolytic 47MFD 16WV	T
C8	ECEA1HKS2R2I	Electrolytic 2.2MFD 50WV	T
C9	ECEA1HKS2R2I	Electrolytic 2.2MFD 50WV	T
C12	ECUV1H104KBN	Ceramic 0.1MFD 50WV	T
C15	ECUV1H223KBN	Ceramic 0.22MFD 50WV	T
C16	ECUV1C224KBN	Ceramic 0.22MFD 16WV	T
C18	ECEA1CKS100I	Electrolytic 10MFD 16WV	T
C19	ECUV1H271JCN	Ceramic 270PF 50WV	T
C20	ECUV1H271JCN	Ceramic 270PF 50WV	T
C21	ECUV1H271JCN	Ceramic 270PF 50WV	T
C22	ECUV1H271JCN	Ceramic 270PF 50WV	T
C24	ECUV1H822KBN	Ceramic 0.082MFD 50WV	T
4. Resistors			
MAIN BLOCK [E-4C244]			
J1	ERJ6GEY0R00V	Chip 0 ohms 1/10W	T
J2	ERJ6GEY0R00V	Chip 0 ohms 1/10W	T
J3	ERJ6GEY0R00V	Chip 0 ohms 1/10W	T
J4	ERJ6GEY0R00V	Chip 0 ohms 1/10W	T
J5	ERJ6GEY0R00V	Chip 0 ohms 1/10W	T
J6	ERJ6GEY0R00V	Chip 0 ohms 1/10W	T
J7	ERJ6GEY0R00V	Chip 0 ohms 1/10W	T
J8	ERJ6GEY0R00V	Chip 0 ohms 1/10W	T
J9	ERJ6GEY0R00V	Chip 0 ohms 1/10W	T
J10	ERJ6GEY0R00V	Chip 0 ohms 1/10W	T
J11	ERJ6GEY0R00V	Chip 0 ohms 1/10W	T
J12	ERJ6GEY0R00V	Chip 0 ohms 1/10W	T
J18	ERJ6GEY0R00V	Chip 0 ohms 1/10W	T
J23	ERJ6GEY0R00V	Chip 0 ohms 1/10W	T
J24	ERJ6GEY0R00V	Chip 0 ohms 1/10W	T
J25	ERJ6GEY0R00V	Chip 0 ohms 1/10W	T
J26	ERJ6GEY0R00V	Chip 0 ohms 1/10W	T
J27	ERJ6GEY0R00V	Chip 0 ohms 1/10W	T
J28	ERJ6GEY0R00V	Chip 0 ohms 1/10W	T
J29	ERJ6GEY0R00V	Chip 0 ohms 1/10W	T
J100	ERJ8GX0R00V	Chip 0 ohms 1/8W	T
J101	ERJ8GX0R00V	Chip 0 ohms 1/8W	T
J102	ERJ8GX0R00V	Chip 0 ohms 1/8W	T
J106	ERJ8GX0R00V	Chip 0 ohms 1/8W	T
J105	ERJ8GX0R00V	Chip 0 ohms 1/8W	T
R055	ERDS2TJ102T	Carbon 1k ohms 1/4W	T
R101	ERJ8GEYJ5R6V	Carbon 5.6 ohms 1/8W	T
R103	ERDS2TJ101T	Carbon 100 ohms 1/4W	T
R104	ERJ6GEYJ681V	Carbon 680 ohms 1/10W	T
R105	ERJ6GEYJ153V	Chip 15k ohms 1/10W	T
R106	ERJ6GEYJ152V	Chip 1.5k ohms 1/10W	T
R107	ERJ6GEYJ222V	Chip 2.2k ohms 1/10W	T
R108	ERJ6GEYJ473V	Chip 47k ohms 1/10W	T
R110	ERJ6GEYJ221V	Carbon 220 ohms 1/10W	T

Ref. No.	Part No.	Part Name & Description	Remarks
R113	ERD25TJ103T	Carbon 10k ohms 1/4W	T
R114	ERD25TJ103T	Carbon 10k ohms 1/4W	T
R146	ERJ8GEYJ223V	Chip 22k ohms 1/8W	T
R151	ERJ6GEYJ182V	Chip 1.8k ohms 1/10W	T
R201	ERJ6GEYJ333V	Chip 33k ohms 1/10W	T
R202	ERJ6GEYJ330V	Carbon 33 ohms 1/10W	T
R203	ERJ6GEYJ472V	Chip 4.7k ohms 1/10W	T
R204	ERJ6GEYJ124V	Carbon 120k ohms 1/10W	T
R205	ERJ6GEYJ224V	Chip 220k ohms 1/10W	T
R225	ERJ6GEYJ822V	Chip 8.2k ohms 1/10W	T
R226	ERJ6GEYJ332V	Chip 3.3k ohms 1/10W	T
R241	ERJ6GEYJ103V	Chip 10k ohms 1/10W	T
R242	ERJ6GEYJ103V	Chip 10k ohms 1/10W	T
R243	ERJ6GEYJ471V	Chip 470 ohms 1/10W	T
R263	ERD25TJ101T	Carbon 100 ohms 1/4W	T
R264	ERD25TJ101T	Carbon 100 ohms 1/4W	T
R281	ERJ6GEYJ223V	Chip 22k ohms 1/10W	T
R282	ERJ6GEYJ223V	Chip 22k ohms 1/10W	T
R301	ERJ6GEYJ333V	Chip 33k ohms 1/10W	T
R302	ERJ6GEYJ330V	Carbon 33 ohms 1/10W	T
R303	ERJ6GEYJ472V	Chip 4.7k ohms 1/10W	T
R304	ERJ6GEYJ124V	Carbon 120k ohms 1/10W	T
R309	ERDS2TJ221T	Carbon 220 ohms 1/4W	T
R325	ERJ6GEYJ822V	Chip 8.2k ohms 1/10W	T
R326	ERJ6GEYJ332V	Chip 3.3k ohms 1/10W	T
R338	ERDS2TJ102T	Carbon 1k ohms 1/4W	T
R339	ERDS2TJ102T	Carbon 1k ohms 1/4W	T
R341	ERJ6GEYJ103V	Chip 10k ohms 1/10W	T
R341	ERJ6GEYJ103V	Chip 10k ohms 1/10W	T
R342	ERJ6GEYJ103V	Chip 10k ohms 1/10W	T
R343	ERJ6GEYJ471V	Chip 470 ohms 1/10W	T
R351	ERJ6GEY0R00V	Chip 0 ohms 1/10W	T
R363	ERD25TJ101T	Carbon 100 ohms 1/4W	T
R364	ERD25TJ101T	Carbon 100 ohms 1/4W	T
R381	ERJ6GEYJ223V	Chip 22k ohms 1/10W	T
R382	ERJ6GEYJ223V	Chip 22k ohms 1/10W	T
R401	ERJ6GEYJ103V	Chip 10k ohms 1/10W	T
R402	ERJ6GEYJ103V	Chip 10k ohms 1/10W	T
R403	ERJ8GEYJ473V	Chip 47k ohms 1/8W	T
R404	ERJ6GEYJ104V	Chip 100k ohms 1/10W	T
R405	ERJ6GEYJ104V	Chip 100k ohms 1/10W	T
R406	ERJ6GEYJ102V	Chip 1k ohms 1/10W	T
R407	ERJ6GEYJ102V	Chip 1k ohms 1/10W	T
R408	ERJ6GEYJ102V	Chip 1k ohms 1/10W	T
R409	ERJ6GEYJ102V	Chip 1k ohms 1/10W	T
R414	ERDS2TJ103T	Carbon 10k ohms 1/4W	T
R419	ERJ6GEYJ473V	Chip 47k ohms 1/10W	T
R423	ERJ6GEYJ473V	Chip 47k ohms 1/10W	T
R424	ERJ8GEYJ473V	Chip 47k ohms 1/8W	T
R439	ERJ6GEYJ473V	Chip 47k ohms 1/10W	T
R450	ERJ8GEY0R00V	Chip 0 ohms 1/8W	T
R454	ERDS2TJ103T	Carbon 10k ohms 1/4W	T
R455	ERJ6GEYJ103V	Chip 10k ohms 1/10W	T
R457	ERDS2TJ103T	Carbon 10k ohms 1/4W	T
R465	ERJ6GEYJ472V	Chip 4.7k ohms 1/10W	T
R500	ERJ6GEYJ224V	Chip 220k ohms 1/10W	T
R503	ERDS2TJ473T	Carbon 47k ohms 1/4W	T
R505	ERJ6GEYJ104V	Chip 100k ohms 1/10W	T
R600	ERJ6GEYJ333V	Chip 33k ohms 1/10W	T
R603	ERJ6GEYJ102V	Chip 1k ohms 1/10W	T
R604	ERJ6GEYJ104V	Chip 100k ohms 1/10W	T
R605	ERJ6GEYJ473V	Chip 47k ohms 1/10W	T
R606	ERJ6GEYJ473V	Chip 47k ohms 1/10W	T
R607	ERJ6GEYJ104V	Chip 100k ohms 1/10W	T
R611	ERJ6GEYJ103V	Chip 10k ohms 1/10W	T
R612	ERJ6GEYJ473V	Chip 47k ohms 1/10W	T
R614	ERJ6GEYJ473V	Chip 47k ohms 1/10W	T
R621	ERJ8GEYJ183V	Carbon 18k ohms 1/8W	T
R623	ERJ6GEYJ563V	Chip 56k ohms 1/10W	T
R624	ERJ6GEYJ473V	Chip 47k ohms 1/10W	T
R626	ERJ6GEYJ472V	Chip 4.7k ohms 1/10W	T
R627	ERJ6GEYJ102V	Chip 1k ohms 1/10W	T
R628	ERJ6GEYJ102V	Chip 1k ohms 1/10W	T

Ref. No.	Part No.	Part Name & Description	Remarks
R630	ERJ6GEYJ102V	Chip 1k ohms 1/10W	T
R638	ERJ6GEYJ472V	Chip 4.7k ohms 1/10W	T
R642	ERJ6GEYJ103V	Chip 10k ohms 1/10W	T
R643	ERDS2TJ103T	Carbon 10k ohms 1/4W	T
R650	ERJ6GEYJ102V	Chip 1k ohms 1/10W	T
R654	ERJ6GEYJ473V	Chip 47k ohms 1/10W	T
R655	ERDS2TJ473T	Carbon 47k ohms 1/4W	T
R656	ERDS2TJ473T	Carbon 47k ohms 1/4W	T
R690	ERDS2TJ102T	Carbon 1k ohms 1/4W	T
R691	ERJ6GEYJ102V	Chip 1k ohms 1/10W	T
R692	ERJ6GEYJ102V	Chip 1k ohms 1/10W	T
R693	ERDS2TJ102T	Carbon 1k ohms 1/4W	T
R695	ERJ6GEYJ102V	Chip 1k ohms 1/10W	T
R696	ERJ6GEYJ102V	Chip 1k ohms 1/10W	T
R697	ERJ6GEYJ102V	Chip 1k ohms 1/10W	T
R698	ERJ6GEYJ102V	Chip 1k ohms 1/10W	T
R700	ERJ6GEYJ102V	Chip 1k ohms 1/10W	T
R701	ERJ6GEYJ102V	Chip 1k ohms 1/10W	T
R702	ERJ6GEYJ102V	Chip 1k ohms 1/10W	T
R703	ERJ6GEYJ103V	Chip 10k ohms 1/10W	T
R704	ERJ8GEYJ102V	Chip 1k ohms 1/8W	T
R705	ERD25FJ820T	Carbon 82 ohms 1/4W	T
R721	ERD25FJ5R6T	Carbon 5.6 ohms 1/4W	T
R722	ERD25FJ151T	Carbon 150 ohms 1/4W	T
R723	ERD25FJ5R6T	Carbon 5.6 ohms 1/4W	T
R727	ERJ6GEYJ473V	Chip 47k ohms 1/10W	T
R728	ERDS1FJ821T	Carbon 820 ohms 1/2W	T
R729	ERDS1FJ821T	Carbon 820 ohms 1/2W	T
R737	ERJ6GEYJ273V	Chip 27k ohms 1/10W	T
R738	ERDS2TJ470T	Carbon 47 ohms 1/4W	T
R739	ERJ8GEYJ682V	Chip 6.8k ohms 1/8W	T
R740	ERD25FJ154T	Carbon 150k ohms 1/4W	T
R751	ERD25FJ2R7T	Carbon 2.7 ohms 1/4W	T
R752	ERDS2TJ103T	Carbon 10k ohms 1/4W	T
R780	ERJ6GEY0R00V	Chip 0 ohms 1/10W	T
R790	ERJ6GEY0R00V	Chip 0 ohms 1/10W	T
R800	ERJ6GEY0R00V	Chip 0 ohms 1/10W	T
R802	ERJ6GEYJ334V	Chip 330k ohms 1/10W	T
R900	ERJ6GEYJ102V	Chip 1k ohms 1/10W	T
R901	ERJ6GEYJ102V	Chip 1k ohms 1/10W	T
R903	ERJ6GEYJ222V	Chip 2.2k ohms 1/10W	T
DISPLAY BLOCK [E-4C249]			
R900	ERJ6GEYJ331V	Carbon 330 ohms 1/10W	T
R902	ERJ6GEYJ473V	Chip 47k ohms 1/10W	T
R903	ERJ6GEYJ102V	Chip 1k ohms 1/10W	T
R904	ERJ6GEYJ102V	Chip 1k ohms 1/10W	T
R905	ERJ6GEYJ102V	Chip 1k ohms 1/10W	T
R908	ERJ6GEY0R00V	Chip 0 ohms 1/10W	T
R909	ERJ6GEYJ102V	Chip 1k ohms 1/10W	T
R912	ERJ6GEYJ472V	Chip 4.7k ohms 1/10W	T
R911	ERJ6GEYJ103V	Chip 10k ohms 1/10W	T
R921	ERJ6GEYJ331V	Carbon 330 ohms 1/10W	T
R922	ERJ6GEYJ331V	Carbon 330 ohms 1/10W	T
R923	ERJ6GEYJ331V	Carbon 330 ohms 1/10W	T
R924	ERJ6GEYJ331V	Carbon 330 ohms 1/10W	T
R925	ERJ6GEYJ331V	Carbon 680 ohms 1/10W	T
R926	ERJ6GEYJ561V	Carbon 560 ohms 1/10W	T
R927	ERJ6GEYJ331V	Carbon 330 ohms 1/10W	T
R980	ERJ6GEYJ103V	Chip 10k ohms 1/10W	T
TAPE BLOCK [E-4C212-1]			
J101	ERJ8GX0R00V	Chip 0 ohms 1/8W	T
J102	ERJ8GX0R00V	Chip 0 ohms 1/8W	T
J103	ERJ8GX0R00V	Chip 0 ohms 1/8W	T
J104	ERJ8GX0R00V	Chip 0 ohms 1/8W	T
J105	ERJ8GX0R00V	Chip 0 ohms 1/8W	T
J106	ERJ8GX0R00V	Chip 0 ohms 1/8W	T
J107	ERJ8GX0R00V	Chip 0 ohms 1/8W	T
J108	ERJ8GX0R00V	Chip 0 ohms 1/8W	T
J109	ERJ8GX0R00V	Chip 0 ohms 1/8W	T
J110	ERJ8GX0R00V	Chip 0 ohms 1/8W	T
J111	ERJ8GX0R00V	Chip 0 ohms 1/8W	T

Ref. No.	Part No.	Part Name & Description	Remarks
J112	ERJ8GX0R00V	Chip 0 ohms 1/8W	T
J113	ERJ8GX0R00V	Chip 0 ohms 1/8W	T
J114	ERJ8GX0R00V	Chip 0 ohms 1/8W	T
J115	ERJ8GX0R00V	Chip 0 ohms 1/8W	T
J116	ERJ8GX0R00V	Chip 0 ohms 1/8W	T
J117	ERJ8GX0R00V	Chip 0 ohms 1/8W	T
J118	ERJ8GX0R00V	Chip 0 ohms 1/8W	T
J119	ERJ8GX0R00V	Chip 0 ohms 1/8W	T
J120	ERJ8GX0R00V	Chip 0 ohms 1/8W	T
J121	ERJ8GX0R00V	Chip 0 ohms 1/8W	T
J122	ERJ8GX0R00V	Chip 0 ohms 1/8W	T
J123	ERJ8GX0R00V	Chip 0 ohms 1/8W	T
J124	ERJ8GX0R00V	Chip 0 ohms 1/8W	T
J125	ERJ8GX0R00V	Chip 0 ohms 1/8W	T
J126	ERJ8GX0R00V	Chip 0 ohms 1/8W	T
R1	ERJ6GEYJ683	Chip 68k ohms 1/10W	T
R2	ERJ6GEYJ223	Chip 22k ohms 1/10W	T
R3	ERJ6GEYJ683	Chip 68k ohms 1/10W	T
R4	ERJ6GEYJ683	Chip 68k ohms 1/10W	T
R5	ERJ6GEYJ683	Chip 68k ohms 1/10W	T
R6	ERJ6GEYJ471	Chip 471 ohms 1/10W	T
R7	ERJ6GEYJ471	Chip 471 ohms 1/10W	T
R8	ERJ6GEYJ104	Chip 100k ohms 1/10W	T
R9	ERJ6GEYJ392	Chip 3.9k ohms 1/10W	T
R13	ERJ8GEYJ103V	Chip 10k ohms 1/10W	T
R14	ERJ8GEYJ103V	Chip 10k ohms 1/10W	T
R15	ERJ8GEYJ222V	Chip 2.2k ohms 1/10W	T
R17	ERJ6GEYJ223	Chip 22k ohms 1/10W	T
R18	ERDS1FJ100	Carbon 10 ohms 1/2W	T
R19	ERJ6GEYJ121	Chip 120 ohms 1/10W	T
R22	ERJ6GEYJ473	Chip 47k ohms 1/10W	T
R23	ERJ6GEYJ473	Chip 47k ohms 1/10W	T
R24	ERJ6GEYJ183	Chip 18k ohms 1/10W	T
R25	ERJ6GEYJ183	Chip 18k ohms 1/10W	T
R26	ERJ6GEYJ183	Chip 18k ohms 1/10W	T
R27	ERJ6GEYJ183	Chip 18k ohms 1/10W	T
R28	ERJ6GEYJ183	Chip 18k ohms 1/10W	T
R29	ERJ6GEYJ274	Chip 270k ohms 1/10W	T
R30	ERJ6GEYJ274	Chip 270k ohms 1/10W	T
R31	ERJ8GEYJ152V	Chip 1.5k ohms 1/10w	T
R33	ERJ8GEYJ101V	Chip 100 ohms 1/10w	T
5. Connectors			
DECK BLOCK [E-4C212-1]			
CN1	YEAE9604L09S	Connector	T
CN2	YEAE5325404	Connector	T
CN3	YEAE012684	Connector	T
MAIN BLOCK [E-4C244]			
CN350	K2HA104B0010	RCA Jack	T
CN601	YEAE012475	Connect	T
CN680	YEAE4CDIN023	Connect 8P Din	T
CN701	K1FA116B0028	Connect	T
CN620	YEAE109RU22	Connect	T
DISPLAY BLOCK [E-4C245]			
CN901	YEAE012476	Connect	T
6. Electric Parts			
SWITCHES			
SW901	K0H1BA000445	Tack Swich	T
SW905	K0H1BA000445	Tack Swich	T
SW909	K0H1BA000445	Tack Swich	T
SW911	K0H1BA000445	Tack Swich	T
SW912	K0H1BA000445	Tack Swich	T
SW913	K0H1BA000445	Tack Swich	T
SW914	K0H1BA000445	Tack Swich	T
SW915	K0H1BA000445	Tack Swich	T
SW916	K0H1BA000445	Tack Swich	T
SW917	K0H1BA000445	Tack Swich	T
SW918	K0H1BA000445	Tack Swich	T
SW919	K0H1BA000445	Tack Swich	T

Ref. No.	Part No.	Part Name & Description	Remarks
SW920	K0H1BA000445	Tack Swich	T
SW922	K0H1BA000445	Tack Swich	T
SW923	K0H1BA000445	Tack Swich	T
SW926	K0H1BA000445	Tack Swich	T
CRYSTAL			
XL101	YEXL4C720TT	Crystal (7.2MHz)	T
XL201	YEXL4C4332TT	Crystal(7.2MHz)	T
XL401	YEXL4C419TT	Crystal OSC	T
COILS			
L101	YELT02C470KT	Axial Coil	T
L102	YELT02C101KT	Axial Coil	T
L103	YELT02C101KT	Axial Coil	T
L201	YELT02C101KT	Axial Coil	T
L401	YELT02C101KT	Axial Coil	T
L700	YETQ024C055	Choke Coil	T
LCD			
LCD901	YEXDCM4C099	LCD	T
POSISTOR			
PT701	YERT7AR4R7MT	Posistor	T
VR			
VR901	K9AA024A0007	Encode VR	T
7. Accessories			
PRINTING			
CQ-R223W	YFM284C381ZA	Operating Instructions	T
CQ-R223WJ	YFM284C396ZA	Operating Instructions	T
INSTALLATION PARTS			
	YEAA33144	ISO Antenna Adaptor	T
	YEAJ02877	Power Connector	T
	YFG044C002ZA	Rear Support Strap	T
	FX0214C316ZA	Mounting Collar	T
	ZZBISRG103U	Screw Kit	T
	YFC054C061ZA	Removable Front Panel Case	T
8. Mechanical Parts			
MISCELLANEOUS			
ANT1	YAA104C700ZA	ANT Jack	T(2-C)
AT1	YAT034C009ZA	Terminal	T(2-C)
AT2	YAT034C009ZA	Terminal	T(2-B)
AT3	YAT034C009ZA	Terminal	T(2-C)
AE1	YEAEFFC005B	Flexible Circuit Board (22P)	T(3-C)
2	YFA054C036YA	Bottom Cover	T(1-C)
3	YFV014C068ZA	Sheet	T(1-C)
4	YFA084C041ZA	Rear Plate	T(3-C)
5	YFA074C046ZA	Front Plate	T(2-B)
6	YFA094C091ZA	Right Plate	T(2-C)
7	YFF014C047ZA	Heat Sink	T(3-B)
8	YEJT034C001	Screw	T(2-C)
9	FX0214C326ZA	Deck Bracket	T(3-C)
10	XSB3+6FXS	Screw	T(3-C)
11	YEJT034C019	Screw(Cup Tight 3x12)	(3-B)
12	FX0214C319ZA	RCA Bkt	T(3-C)
13	XTB26+8G	Screw	T(3-C)
14	FX0214C276ZA	IC Bracket	T(2-B)
15	FX0214C322ZA	Tr Bkt	T(2-B)
16	YJS064C002ZA	Screw (m3x8)	T(2-B)
17	YEFD044C019A	Deck Mechanism	T(3-C)
18	XTW2+5FFXS	Screw	T(4-C)
19	XTB3+6FX	Screw	T
20	YFC024C599ZA	Esc Holder	T(2-B)
21	YEFS011113	Pad	T(2-B)
22	YFX024C054ZB	Cast Cover	T(2-B)
23	FX0054C045ZA	Spring(Cast)	T(2-B)

Ref. No.	Part No.	Part Name & Description	Remarks
24	YFE134C440ZA	Push Button	T(2-B)
25	FX0054C058ZA	Spring (Push Button)	T(2-B)
26	YEFX9991682A	Release Hook	T(2-B)
27	FX0054C049ZA	Spring(Hook)	T(2-B)
28	YJT034C015CA	Step Screw	T(2-B)
29	YFA034C044ZA	Upper Cover	T(4-C)
30	YFC054C059ZA	Trim Plate(Print)	T(1-A)
31	YFX054C051ZA	Spring Plate(R)	T(2-C)
32	YFX054C052ZA	Spring Plate(L)	T(3-B)
33			
34	YFC024C606ZA	Esc Front Cover	T(1-A)
35	YFE134C429ZA	Button (REW)/(FF)	T(1-A)
36	YFE134C428ZA	Button (Eject)	T(1-A)
38	FX0054C056ZA	Spring	T(1-A)
39	YFE134C433ZA	Button(Band/Pwr)	T(2-A)
40	YFE134C437ZA	Button (Preset)	T(1-A)
41	YFE134C441ZA	Button(Tune/Track)	T(1-B)
42	YFE134C436ZA	Button(CD.C/Disp)	T(1-B)
44	YFE074C059ZA	Vol Knob	T(2-A)
45	YFX054C053ZA	Spring (Knob)	T(2-A)
46	YFE134C419ZA	Button(Release)	T(1-B)
47	FX0054C055ZA	Spring (Open)	T(1-B)
48	YFC024C598ZA	Rear Cover	T(2-B)
49	XTN2+8GFZ	Screw (Esc)	T(2-B)
50	YFV024C080ZA	Sheet(LCD)	T(2-B)
51	YFX214C315YA	LCD Bracket	T(2-B)
52	YEFX0012300	Back light assy	T(2-B)
53	YEJS064C001	Screw (Deck)	T(3-C)
57	AAPC244B0	Main PCB Ass'Y	T(2-C)/RTL
58	APCB249A0-J	Display PCB Ass'Y	T(2-B)/RTL
59	ZZAPCB212B0	Deck PCB Ass'y	T(4-C)/RTL

15 EXPLODED VIEW (Unit)

■ Numbers in ○ are indicated REF.No.in the REPLACEMENT PARTS LIST

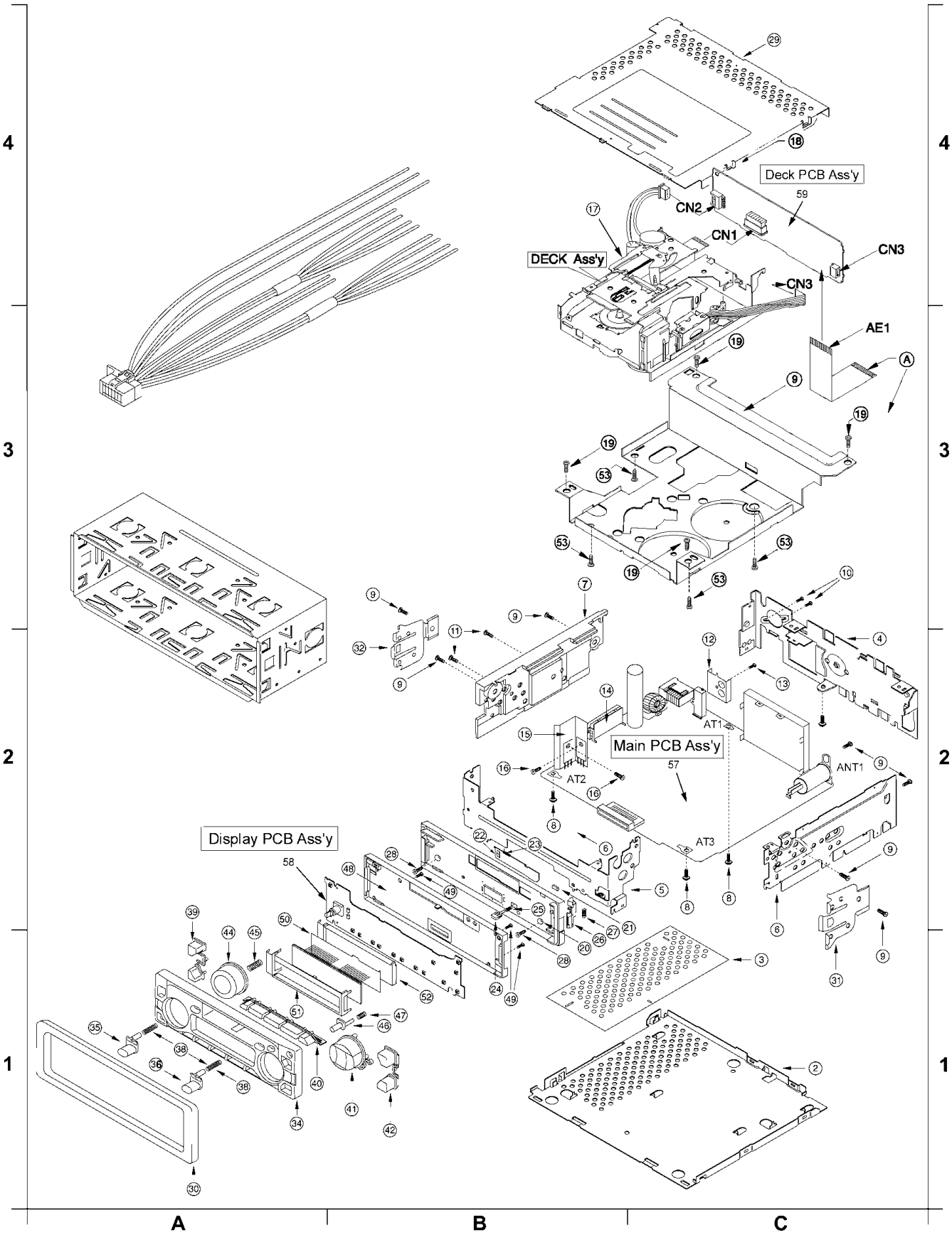

16 REPLACEMENT PARTS LIST (Tape Player Parts)

Note:

1. Be sure to make your orders of replacement parts according to this list.
2. Important safty notice: Component , indentified by ⚠ mark have special characteristics important for safety. when replacing any of these components, use only manufacturer's specified parts.
3. Location keys in the remarks column indicates the general location of the parts shown in the exploded drawing. as in a load map.
4. "T" marks in remarks colum are indicated supply parts of TAMACO.

Ref. No.	Part No.	Part Name & Description	Remarks
MISCELLANEOUS			
Ref.NO.	Part No.	Part Name & Description	Remarks
1	YESFA01051	Chassis Rivet Ass'y	(2-B)
4	YESFX046056	Main Plate	(1-C)
5	YESFX003049	B Gear	(2-B)
6	YESFX003050	C Gear	(2-B)
7	YESFX003051	D Gear	(1-B)
8	YESFX003052	P Gear	(2-B)
9	YESFX003053	P.G Plate	(2-A)
			(3-B)
10	YESFG02021	Guide BKT	(2-C)
11	YESFX026013	Middle Pulley	(2-B)
15	YESFX046057	Head Panel Ass'y	(2-C)
16	YESAH006	P.Head P-5544SD-9949	(2-C)
17	YESFX046058	Head SP Plate	(2-C)
20	YESFX046059	O.P Plate Ass'y	(1-B)
21	YESFX215015	Eject Lever Rivet Ass'y	(3-A)
22	YESFX046060	S.B Plate Rivet Ass'y	(1-C)
23	YESFX046061	O.P Plate Holder	(3-A)

Ref. No.	Part No.	Part Name & Description	Remarks
26	YESFX003054	FR Gear	(1-B)
27	YESFX046062	FR Plate	(1-B)
30	YESFX218015	Pinch Roller Arm (F) Ass'y	(3-C)
31	YESFX218016	Pinch Roller Arm (R) Ass'y	(2-C)
36	YESFX209007	Reel Ass'y	(2-A)
			(3-B)
37	YESFX005074	B. Tension Spring (F)	(2-A)
			(3-B)
40	YESAK01013	Sub Motor Ass'y	(4-A)
43	YESAK01014	Main Motor Ass'y	(4-A)
44	YESAE283	M Connector Ass'y	(4-A)
45	YESFX006002	Wire Clamper	(3-A)
48	YESFX213004	FL Capstan ASS'Y	(1-B)
49	YEFSFR03003	Main Belt	(1-B)
52	YESFX046064	Case Lifter	(4-A)
53	YESFX239006	Cassette Case	(3-B)
54	YESFS04007	Cusion Rubber	(3-B)
56	YESFX046065	P.S Actuator Plate	(4-A)
57	YESFX005075	P.S Spring	(4-A)
58	YESFX046066	Pack Slider	(4-C)
61	YESAP151	Reel PWB Ass'y	(2-A)
200	YESJS01133	Camera Screw (Tams) 2.0x2.2	(1-A)
201	YESJW01019	Lumilar Washer (Cut)	(3-A)
		1.55x3.5x0.5	(3-B)
202	YESJS01070	Adjust Screw 2.0x3.0	(2-C)
203	YEFT03084	Camera Tapping Screw 2.0x3.0	(3-A)
			(4-A)
204	YEJS06130	Tams Screw 2.0x3.0	(3-A)
205	YEJW05130	P.Washer (Cut) 0.85x2.8x0.25	(2-B)
206	YESJW01012	P.Washer (Cut) 1.55X3.5X0.5	(2-A)
			(3-C)
207	YESJW01013	P.Washer 2.1x3.5x0.2	(2-A)
			(3-C)
208	YESJW01014	Lumilar Washer 2.1x3.5x0.1	(1-B)
209	YESJS01091	PK Collar Screw A	(1-C)

17 EXPLODED VIEW (Tape Deck)

■ Numbers in ○ are indicated REF.No. in the REPLACEMENT PARTS LIST

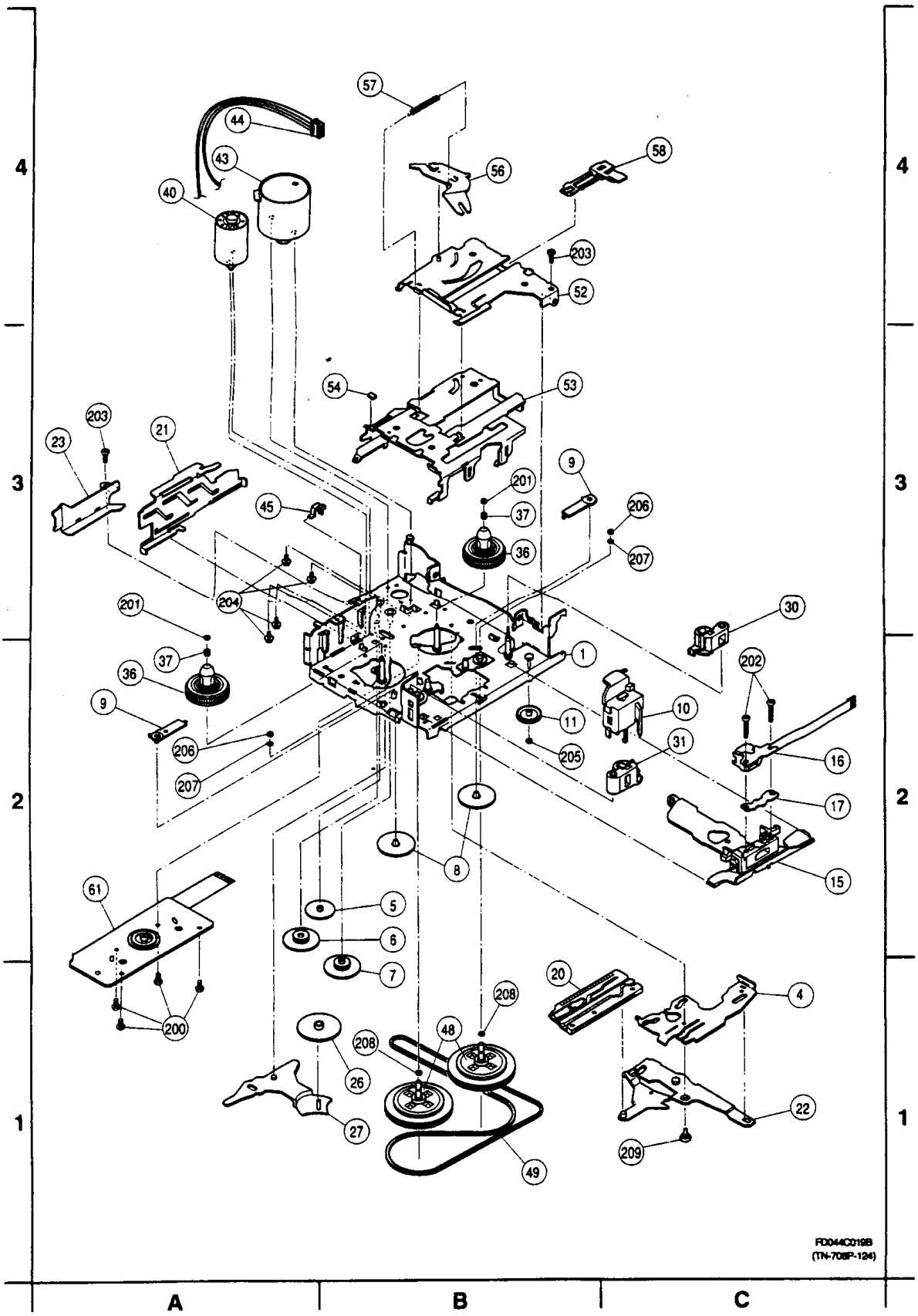

18 SCHEMATIC DIAGRAM for printing with letter size

18.1. Main Block (Left Side)

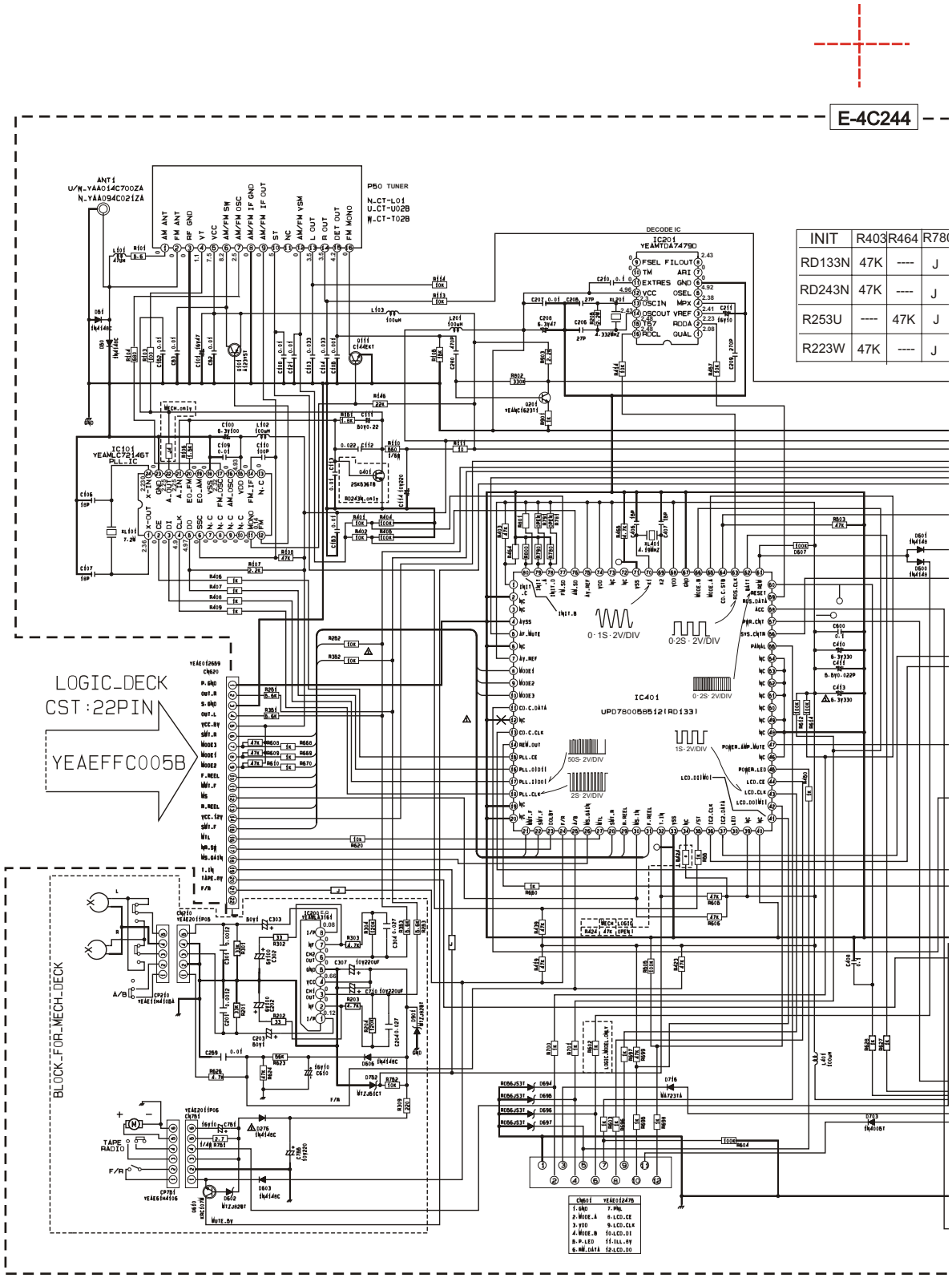

INIT	R403	R464	R78(
RD133N	47K	----	J
RD243N	47K	----	J
R253U	----	47K	J
R223W	47K	----	J

18.2. Main Block (Right Side)

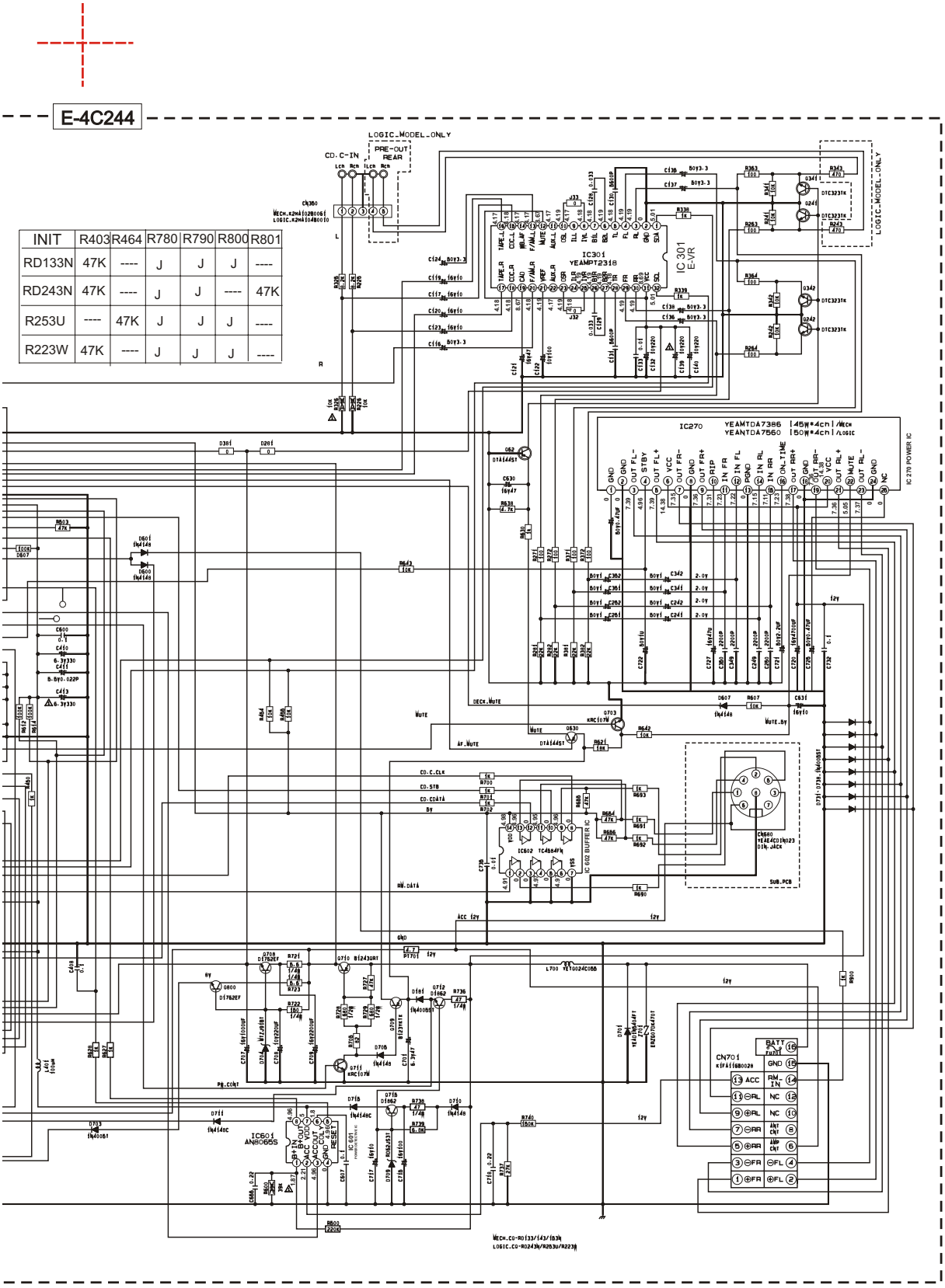

INIT	R403	R464	R780	R790	R800	R801
RD133N	47K	----	J	J	J	----
RD243N	47K	----	J	J	----	47K
R253U	----	47K	J	J	J	----
R223W	47K	----	J	J	J	----

CQ-RD133N/RD143N/RD153N/RD243N/R253U/R223W MAIN BLOCK

18.3. Display Block (Left Side)

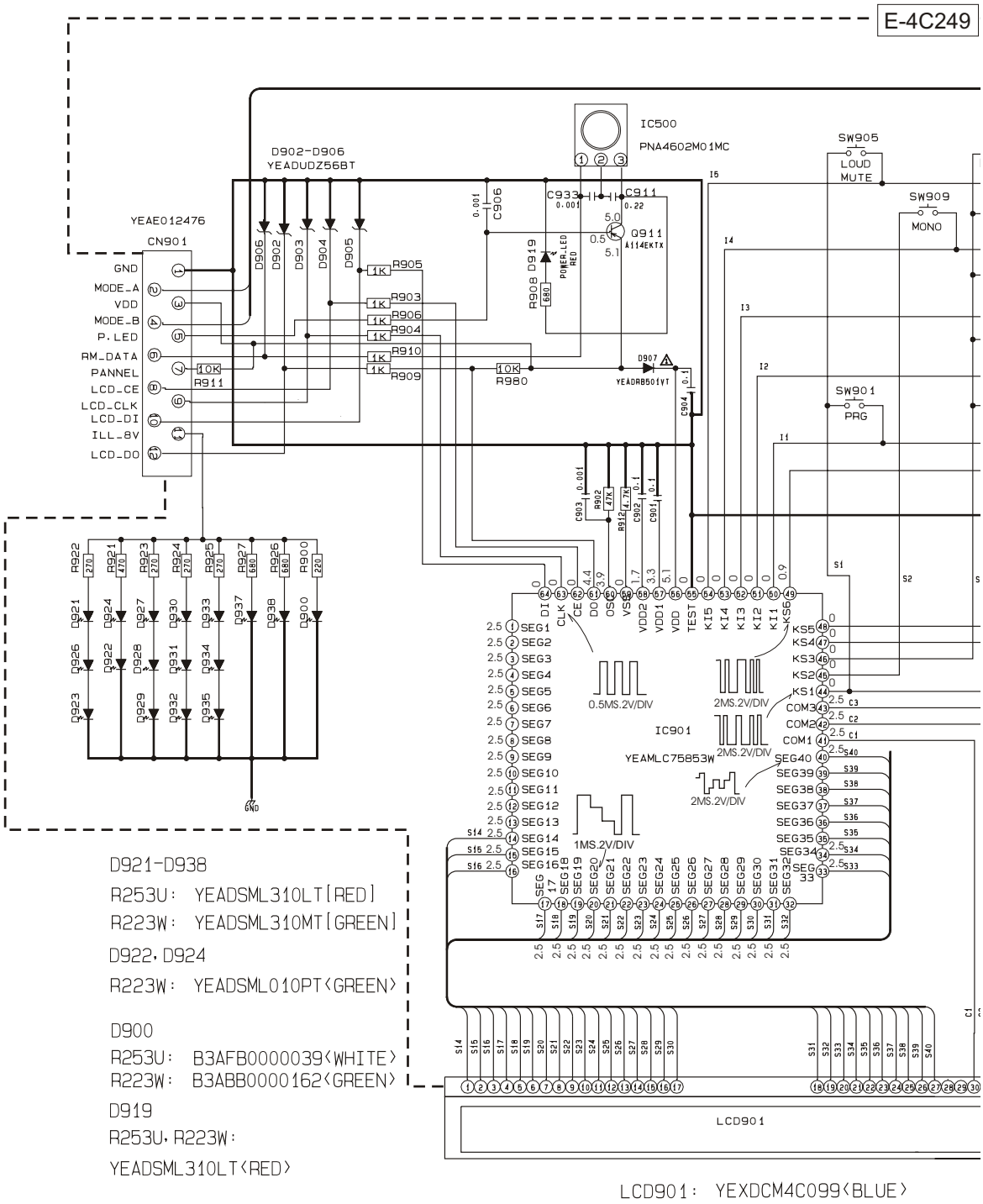

18.4. Display Block (Right Side)

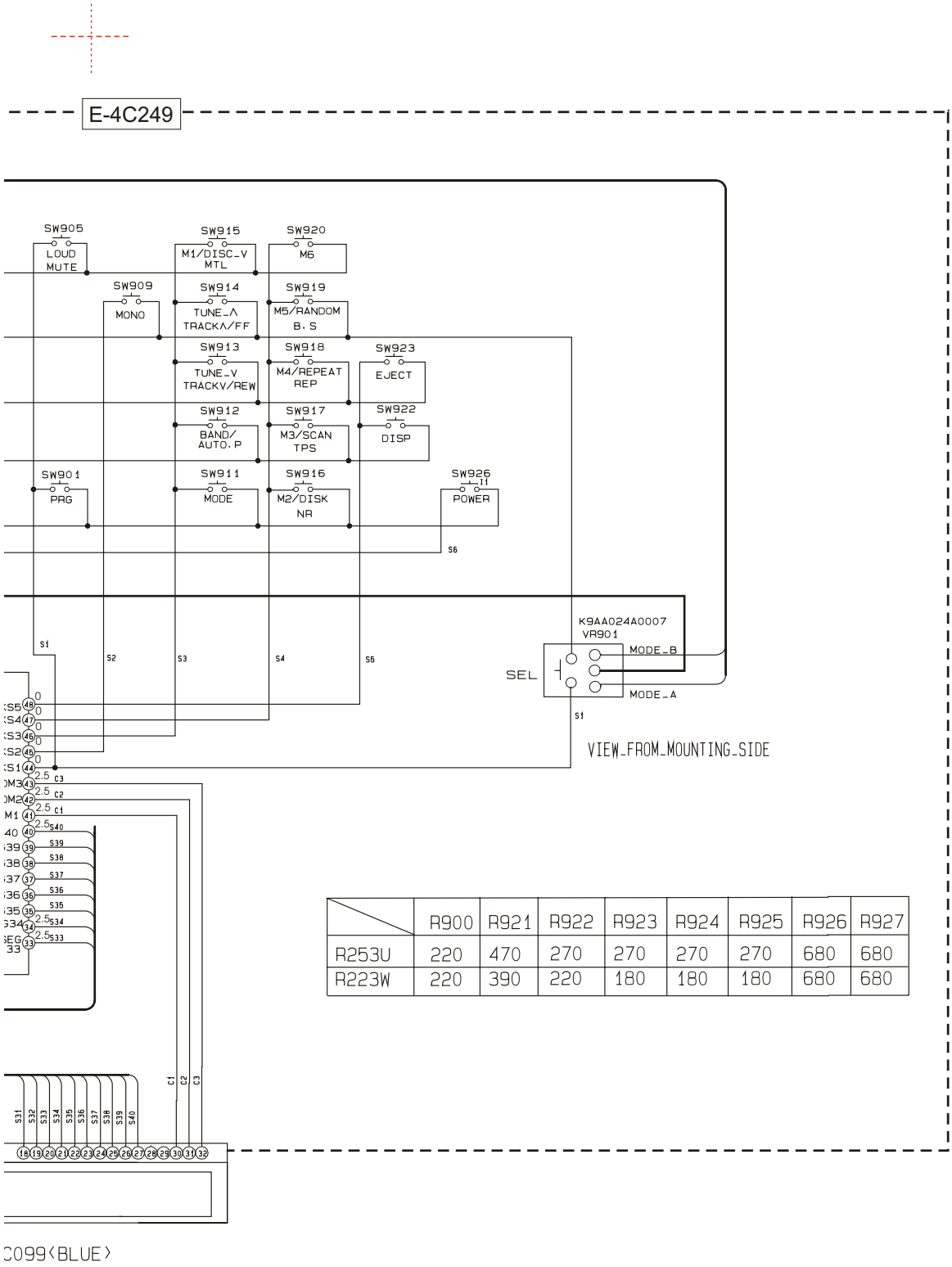

	R900	R921	R922	R923	R924	R925	R926	R927
R253U	220	470	270	270	270	270	680	680
R223W	220	390	220	180	180	180	680	680

CQ-R223W/R223WJ/CQ-R253U DISPLAY BLOCK

18.5. Tape Block (Left Side)

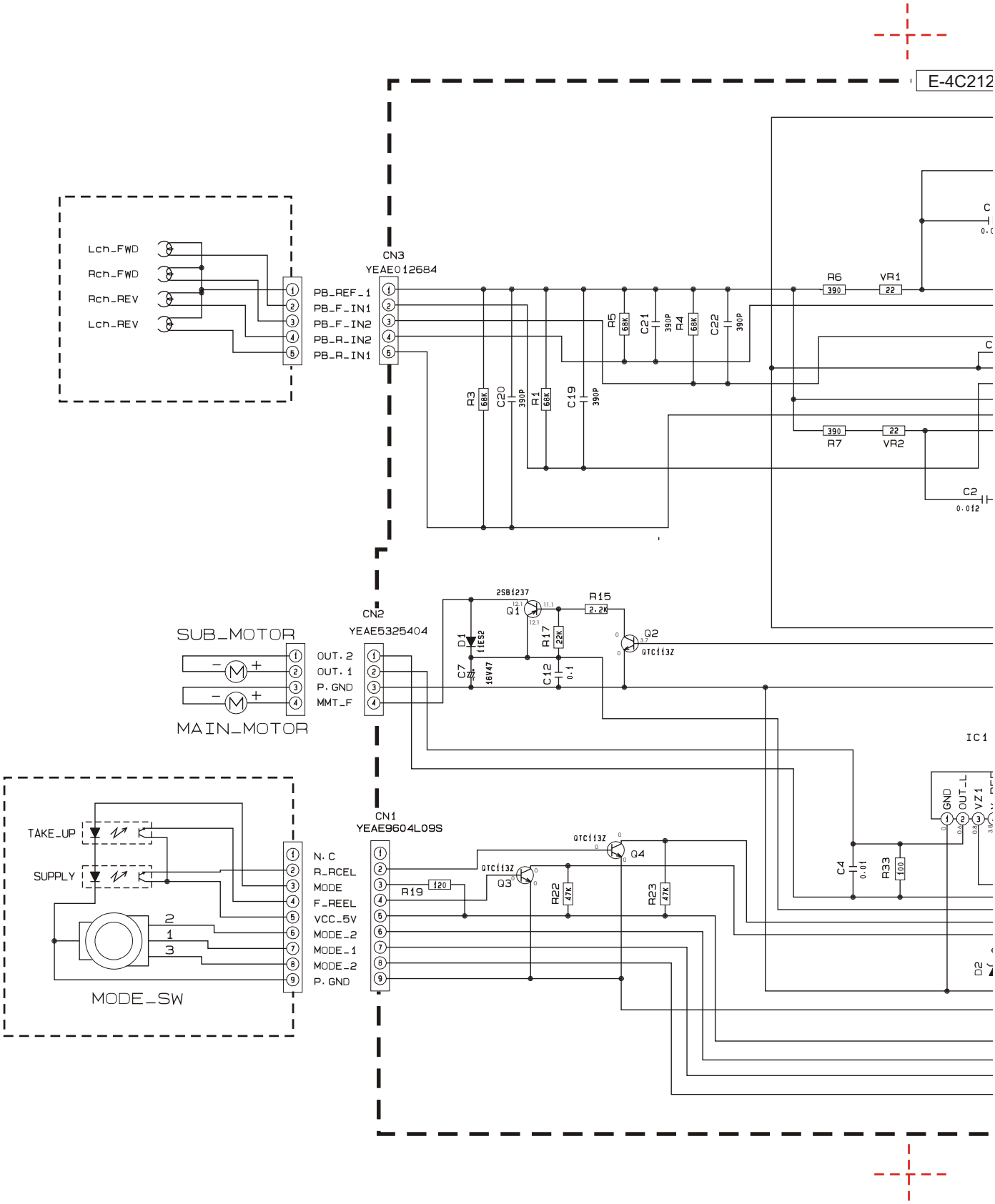

18.6. Tape Block (Rightt Side)

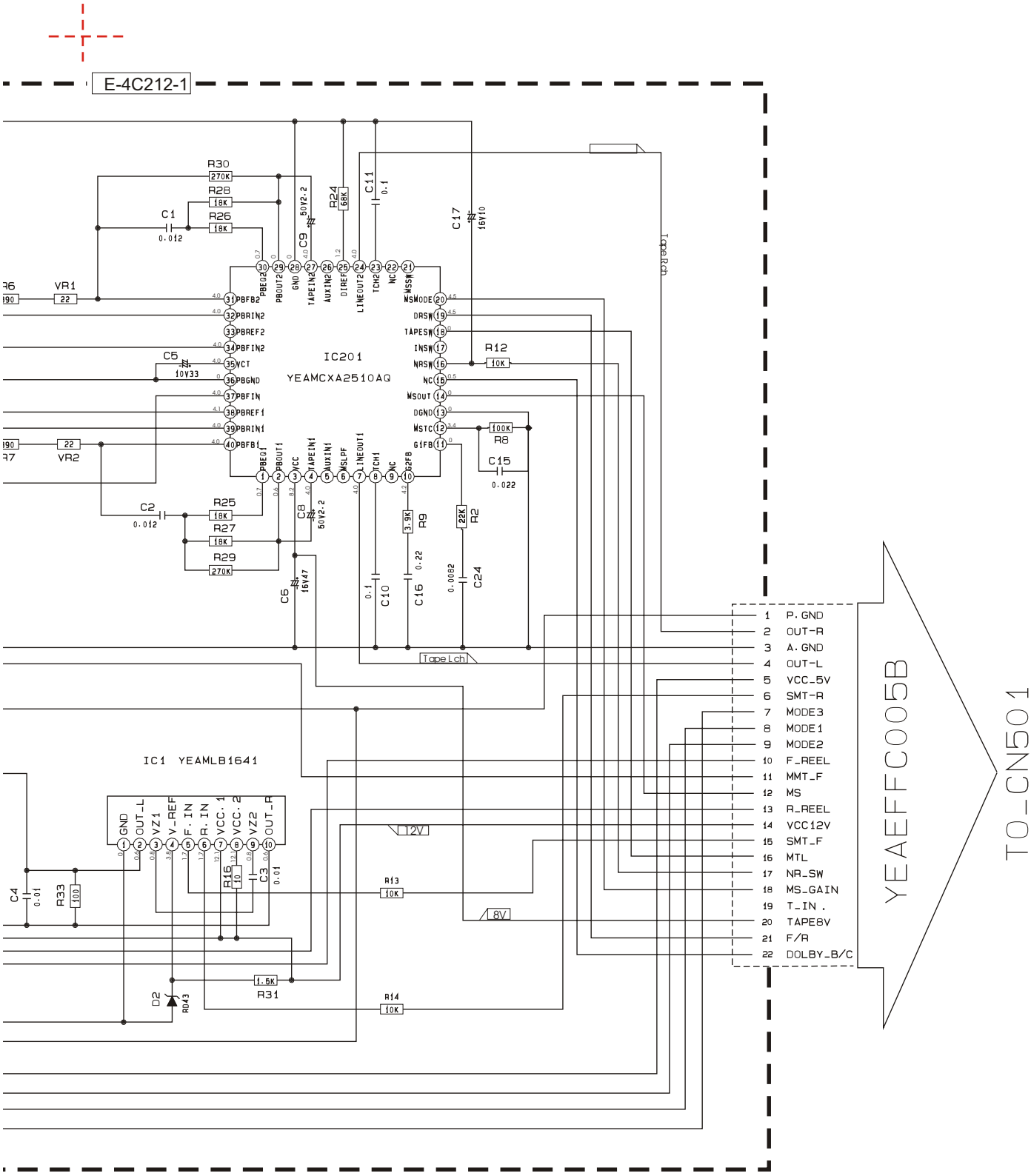

CQ-R221U/RD243W TAPE BLOCK

Printed in Taiwan
2003.01

■ Numbers in ○ are indicated REF.No. in the REPLACEMENT PARTS LIST

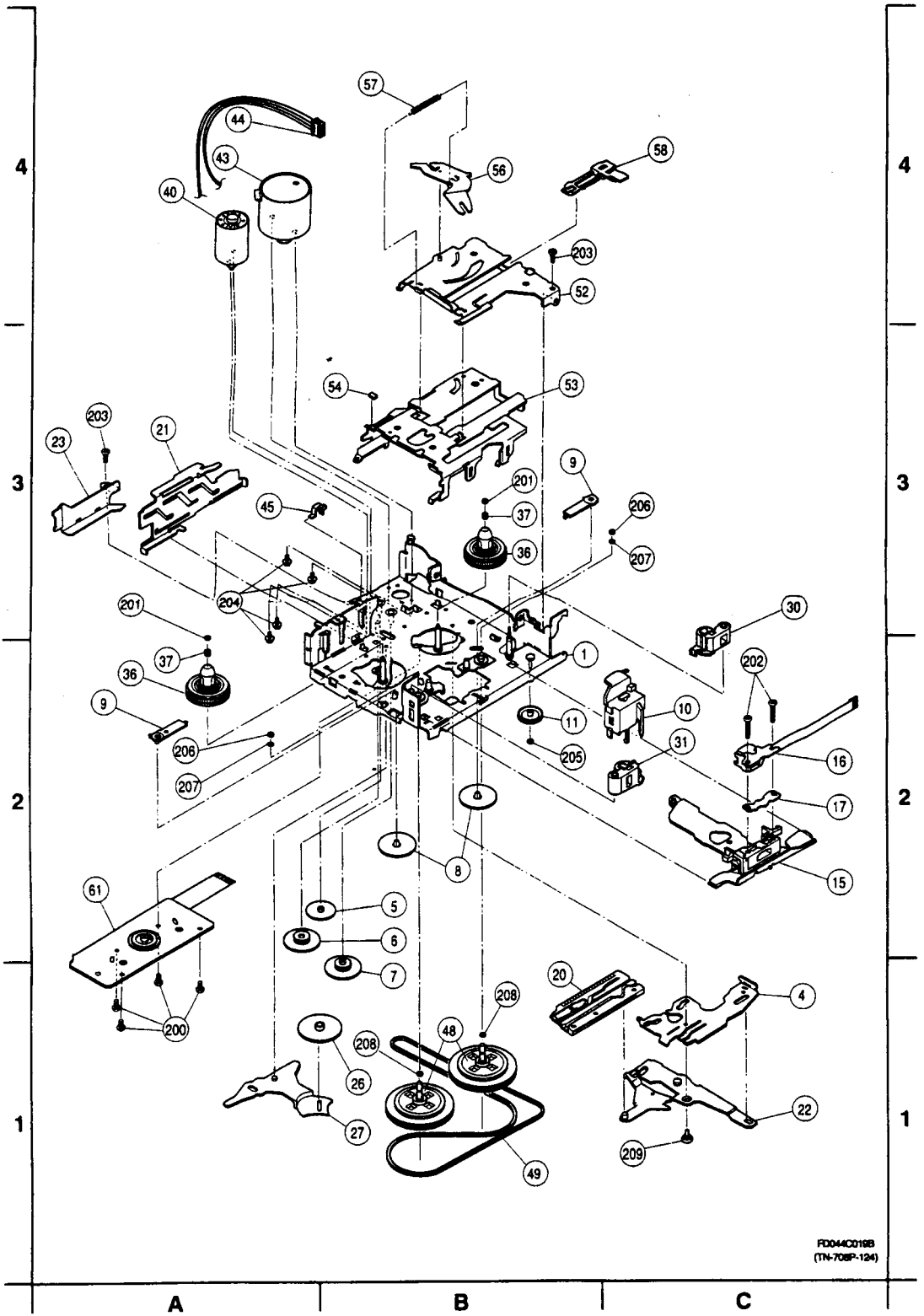

■ Numbers in ○ are indicated REF.No.in the REPLACEMENT PARTS LIST

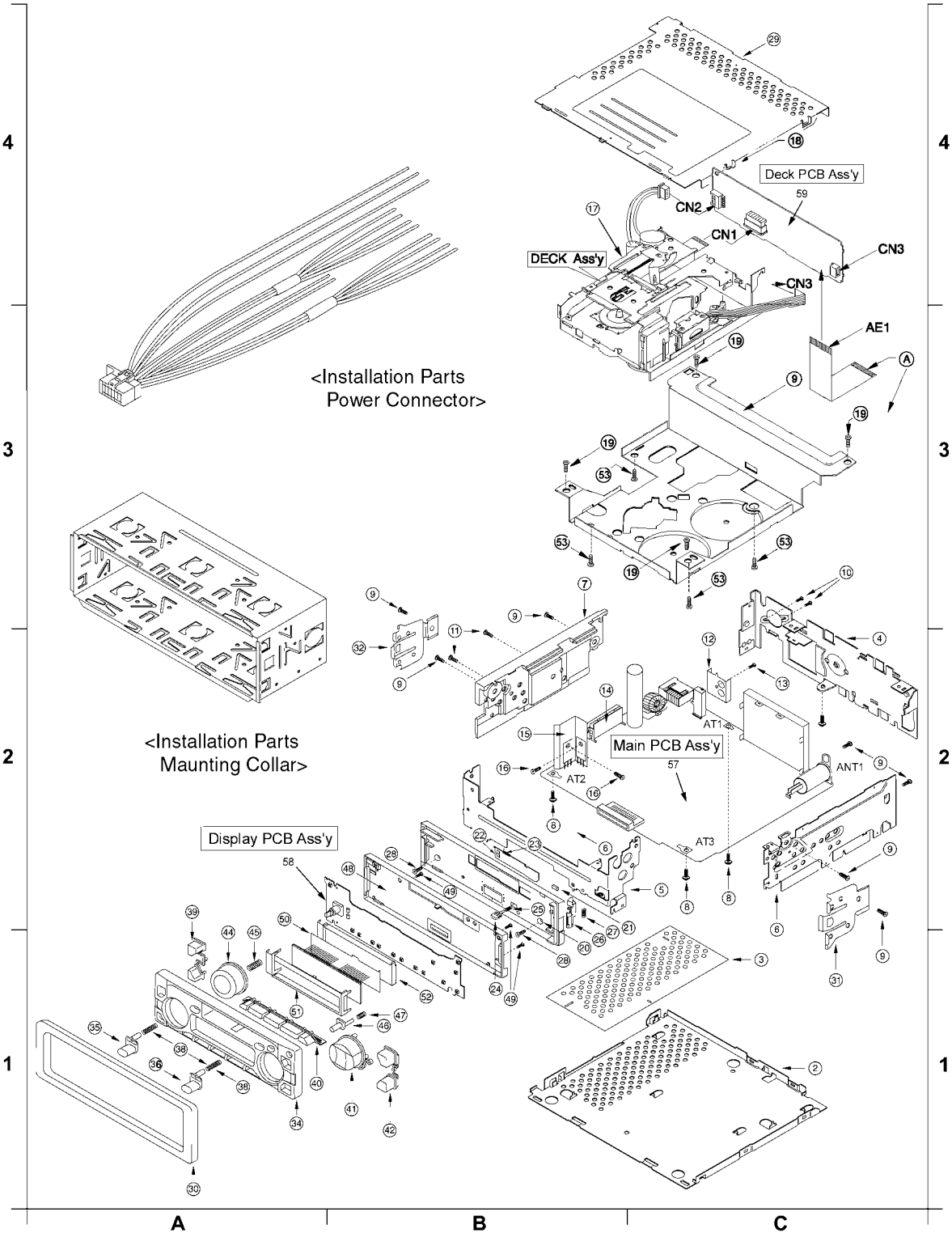

IC1 YEAMLB1641

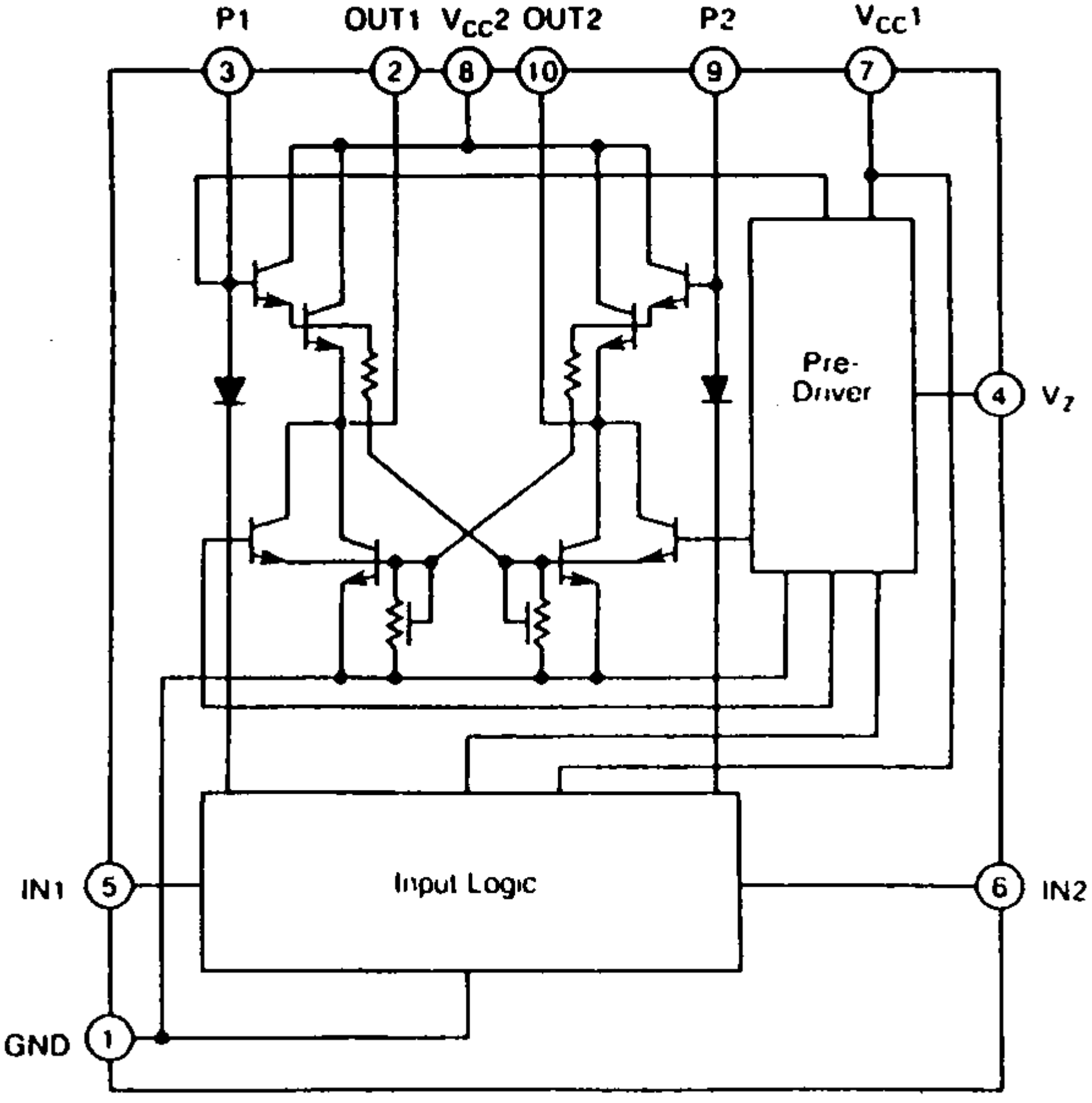

YEAMPT2313L

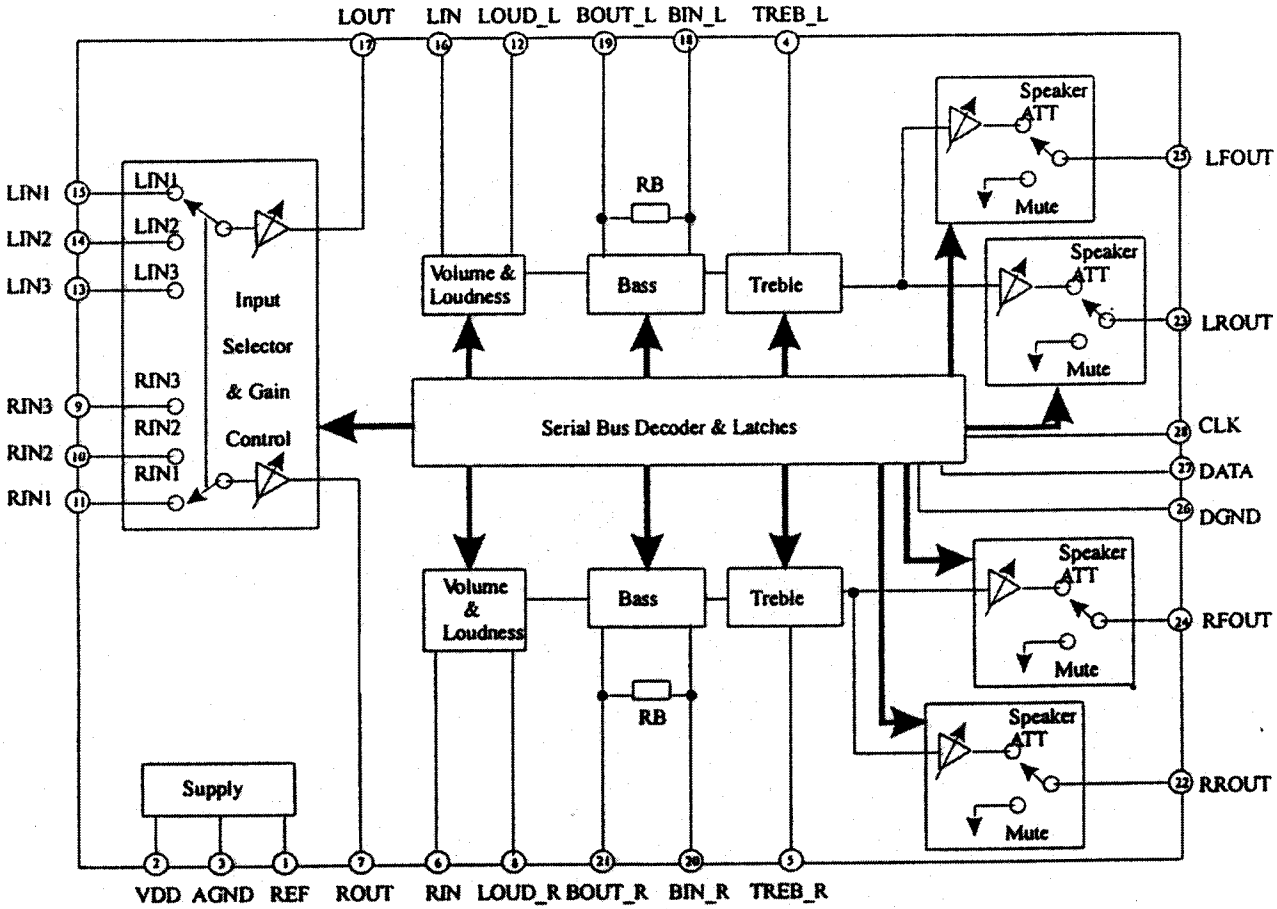

IC301 YEAMPT2318T

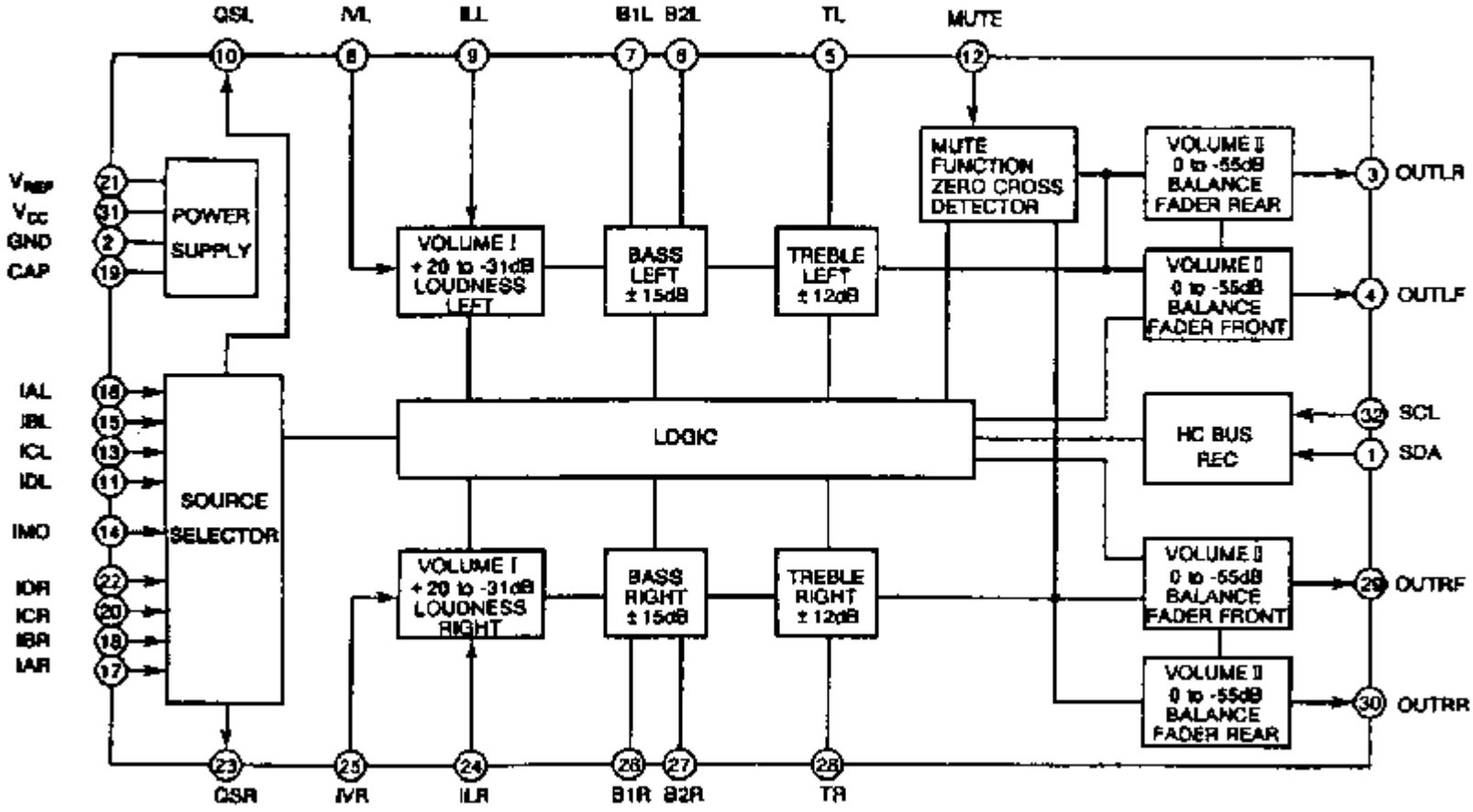

IC2 YEAMCXA2510Q

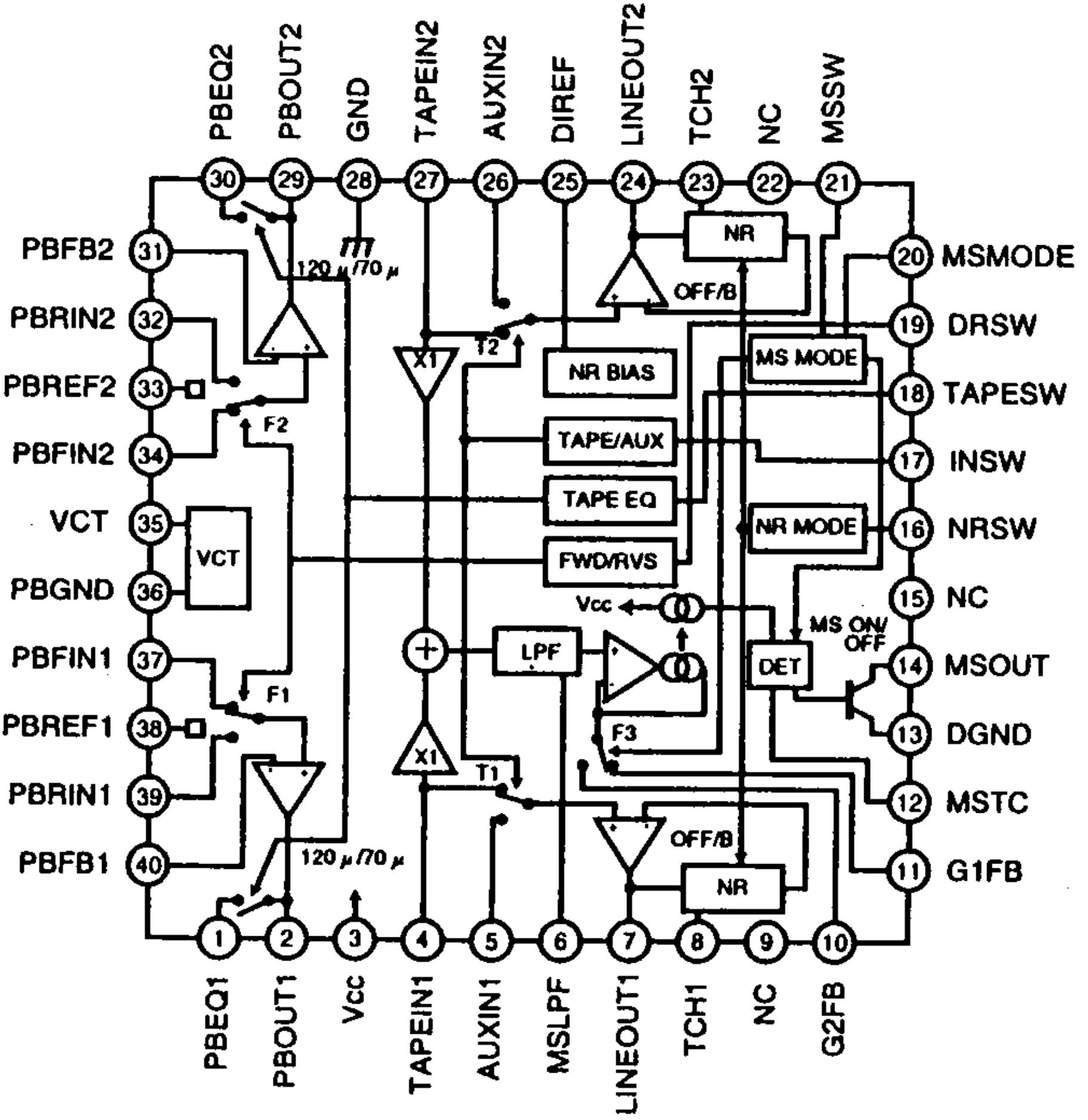

IC602 YEAMTC4584FN

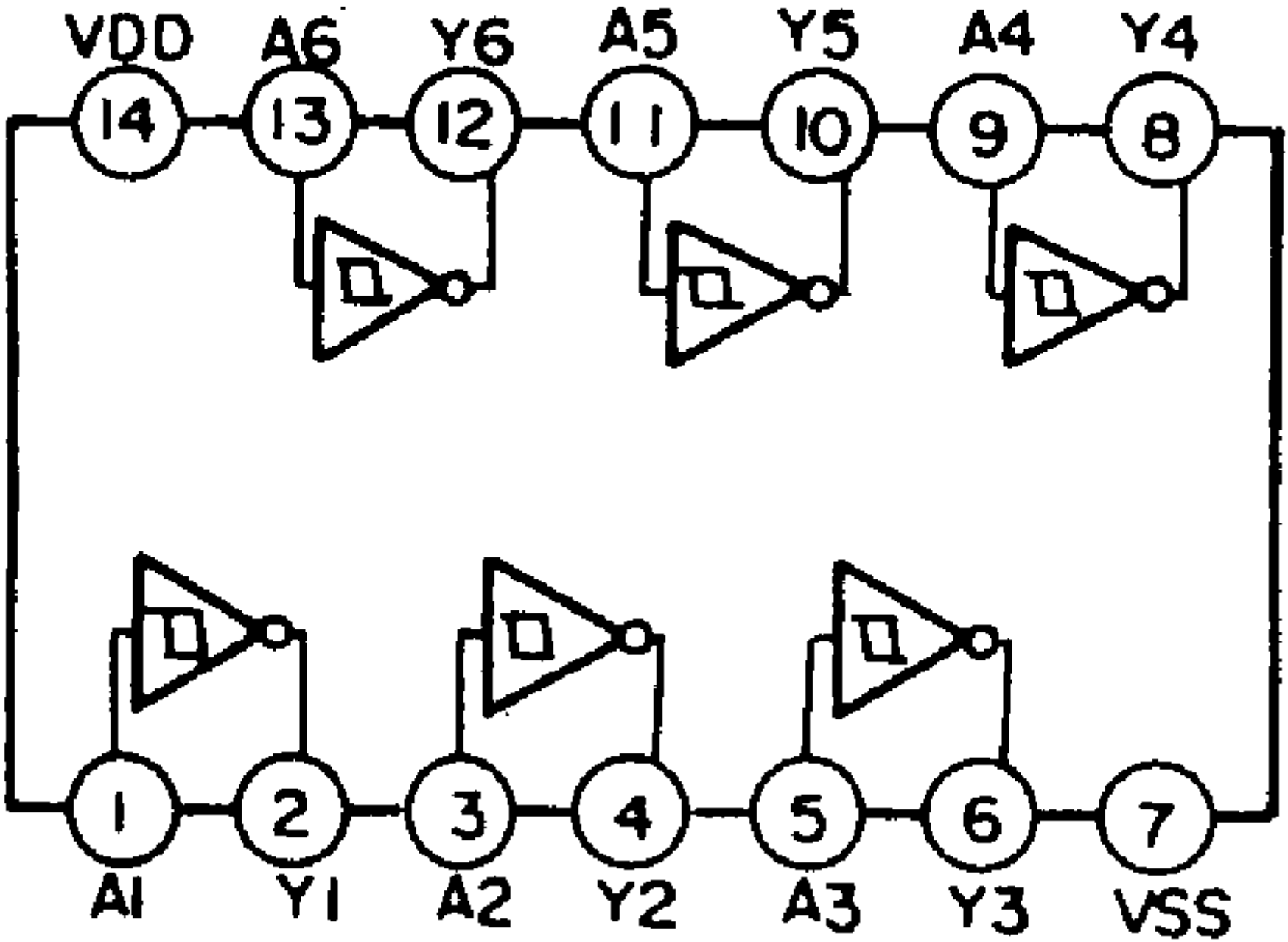

IC 201 YEAMTDA7479D

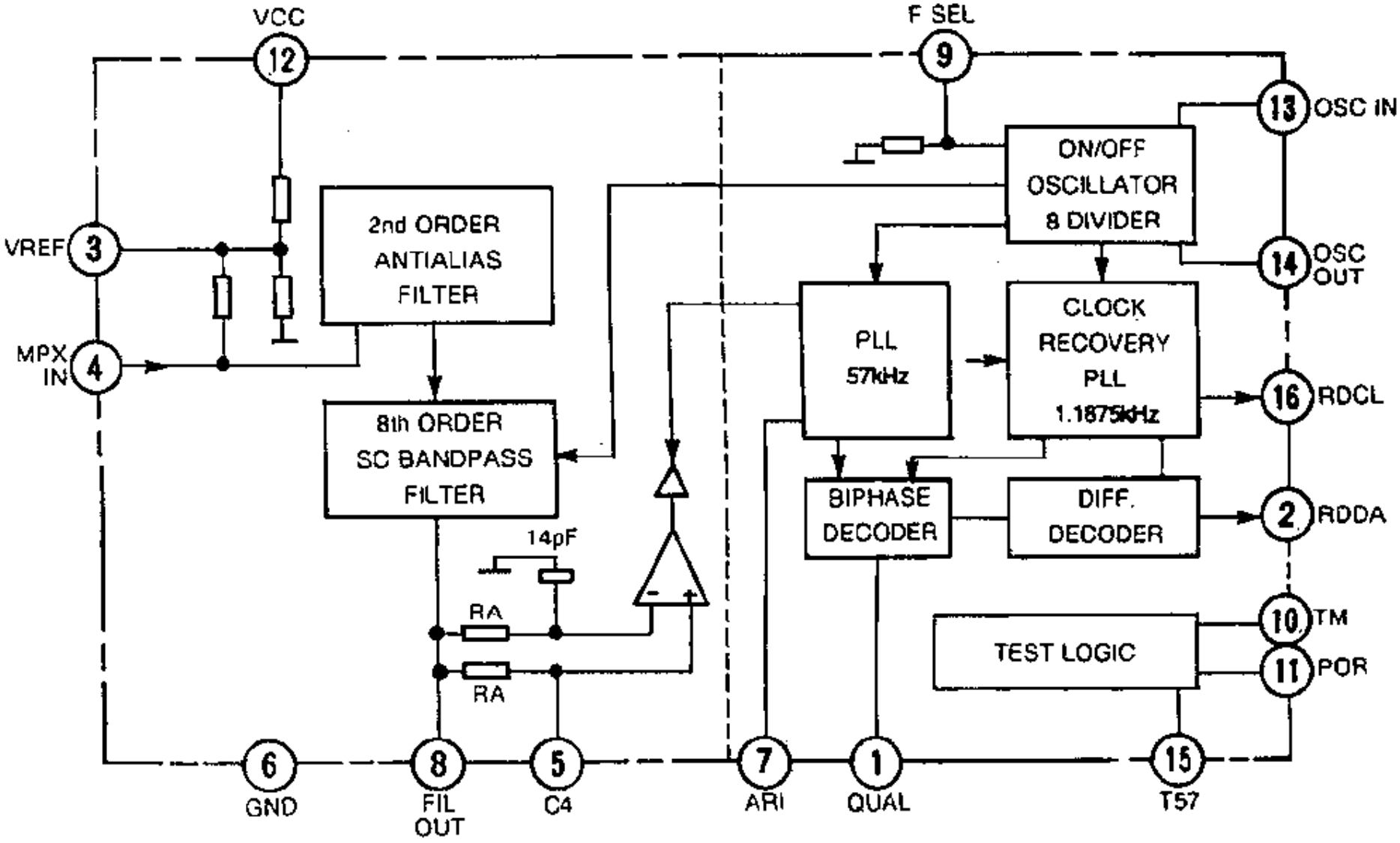

IC200 YEAMLA3161

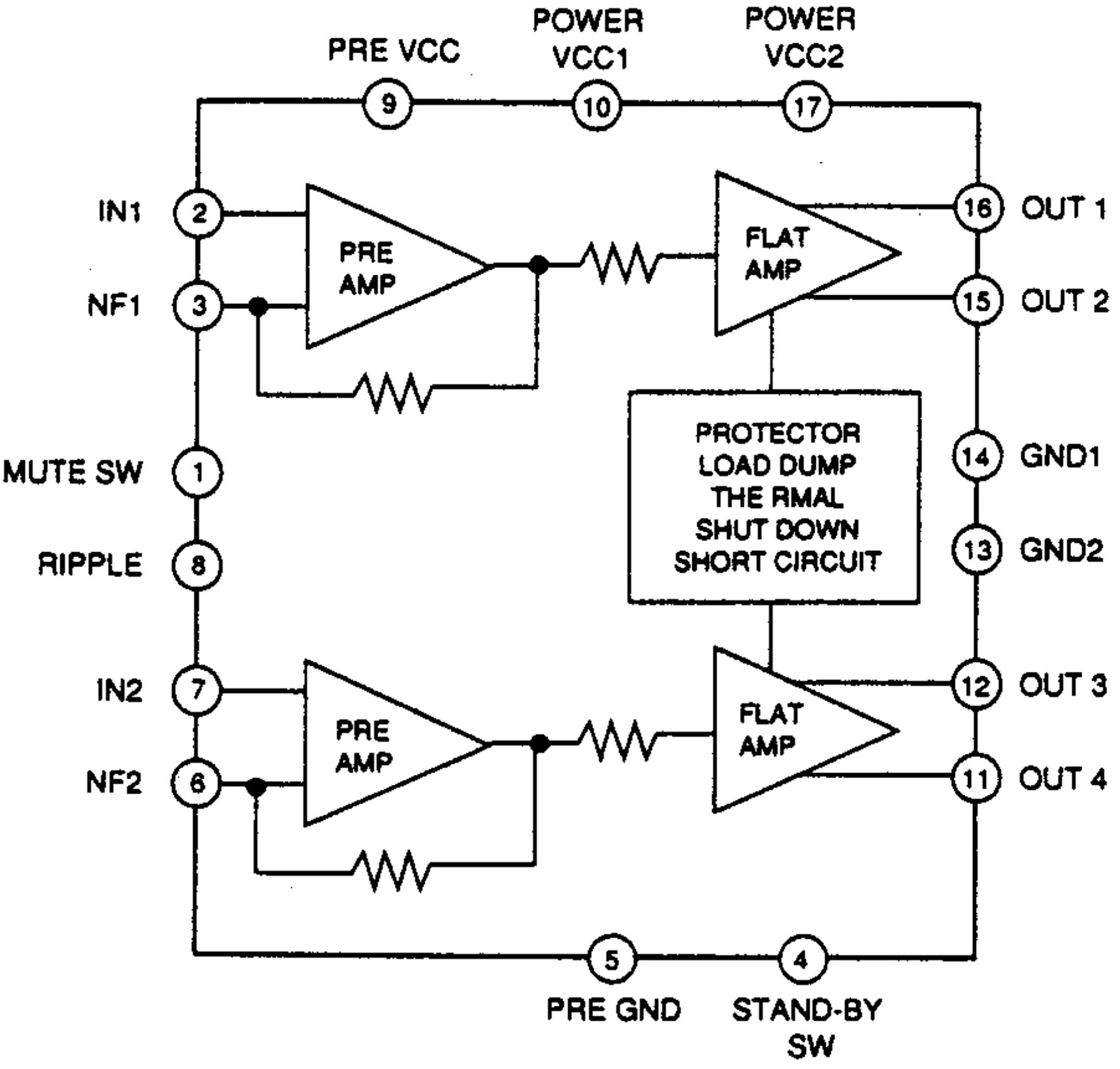

IC270 C1EA00000026

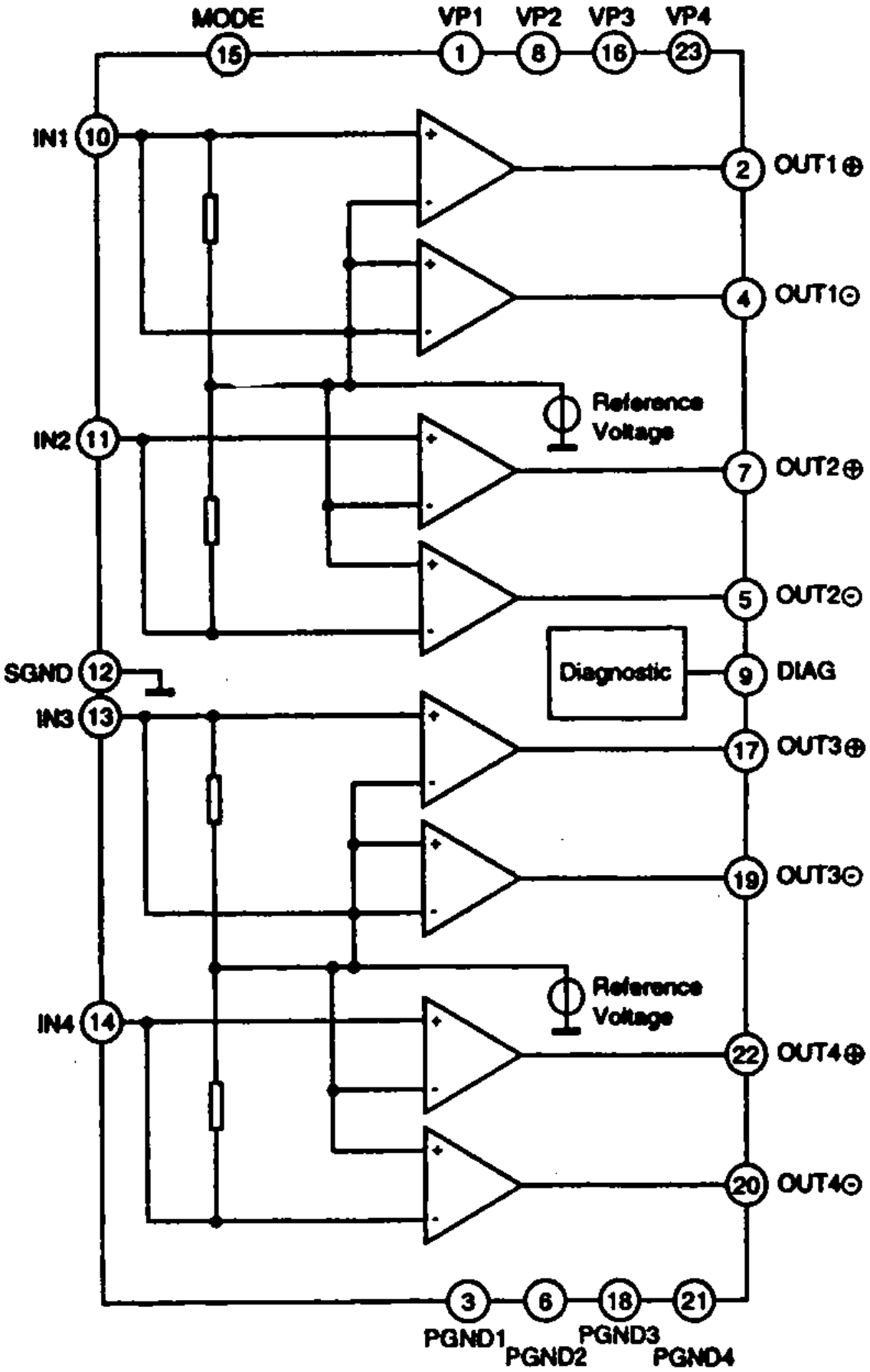

IC270 YEAMTDA8571J

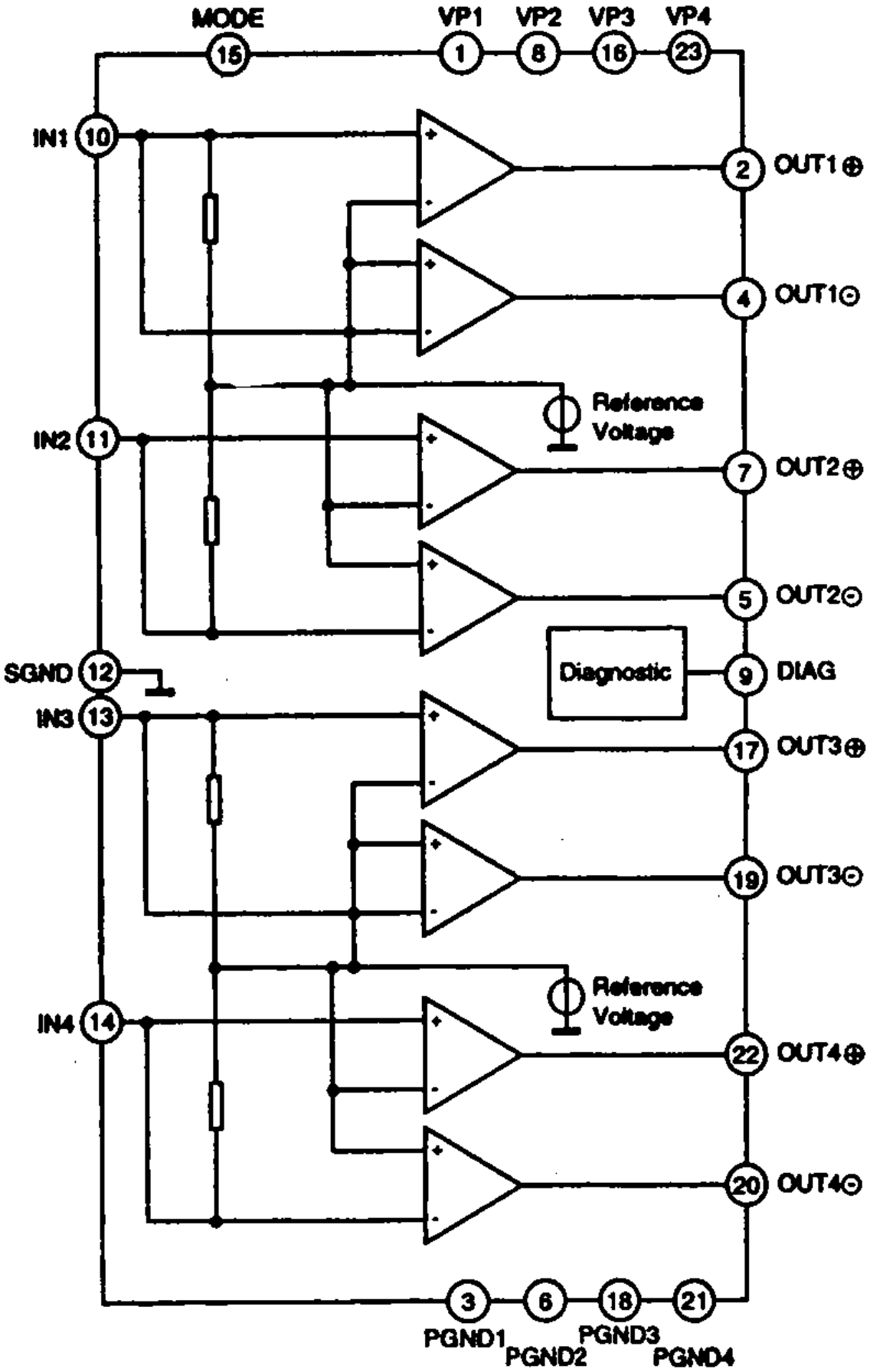

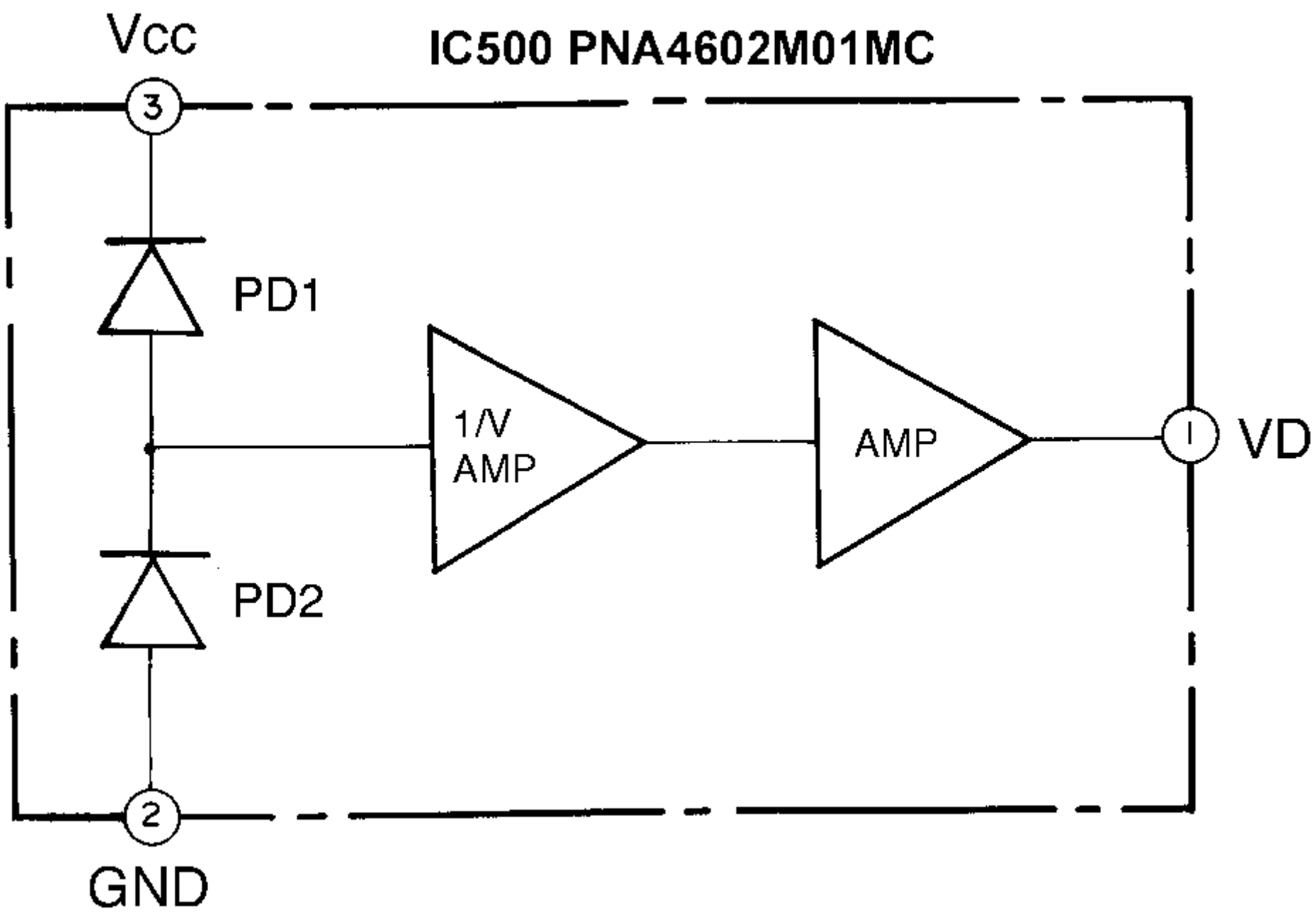
Vcc
IC500 PNA4602M01MC
3
PD1
1/V
AMP
AMP
1
VD
PD2
2
GND

Note:

1. Be sure to make your orders of replacement parts according to this list.
2. Important safty notice: Component , indentified by ⚠ mark have special characteristics important for safety. when replacing any of these components, use only manufacturer's specified parts.
3. Location keys in the remarks column indicates the general location of the parts shown in the exploded drawing. as in a load map.
4. The marking (RTL) indicates that Retention Time is **limited** for this item. After the discontinuation of assembly in production, the item will continue to be availability is dependent on the type of assembly, and in accordance with the laws governing part and product retention. Aft the end of this period, the assembly will no longer be available.
5. "T" marks in remarks colum are indicated supply parts of TAMACO.

- **Order intake period is basically six months after the first shipment**

Note:

1. Be sure to make your orders of replacement parts according to this list.
2. Important safty notice: Component , indentified by ⚠ mark have special characteristics important for safety. when replacing any of these components, use only manufacturer's specified parts.
3. Location keys in the remarks column indicates the general location of the parts shown in the exploded drawing. as in a load map.
4. "T" marks in remarks colum are indicated supply parts of TAMACO.

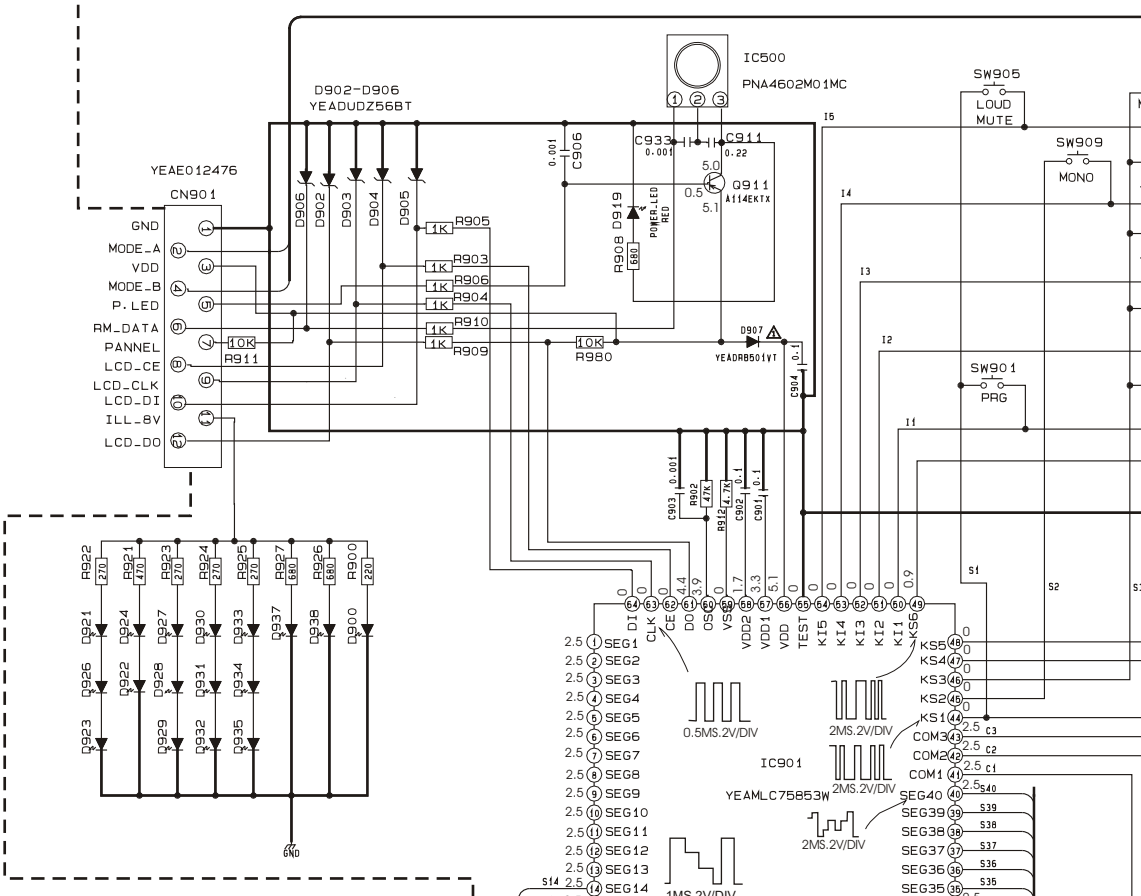

D921-D938

R253U: YEADSML310LT[RED]

R223W: YEADSML310MT[GREEN]

D922, D924

R223W: YEADSML010PT<GREEN>

D900

R253U: B3AFB0000039<WHITE>

R223W: B3ABB0000162<GREEN>

D919

R253U, R223W:

YEADSML310LT<RED>

LCD901: YEXDCM4C099<BLUE>

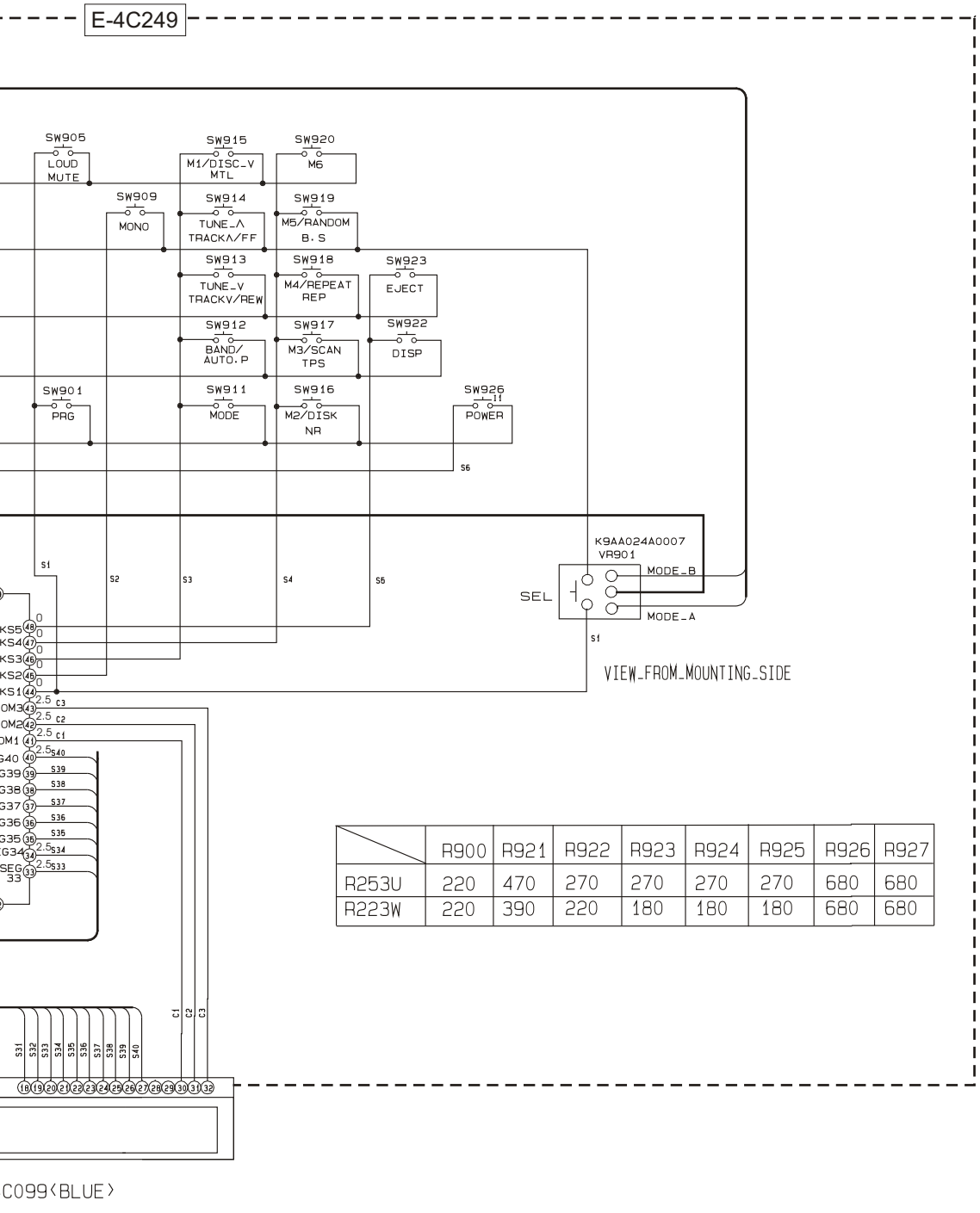

	R900	R921	R922	R923	R924	R925	R926	R927
R253U	220	470	270	270	270	270	680	680
R223W	220	390	220	180	180	180	680	680

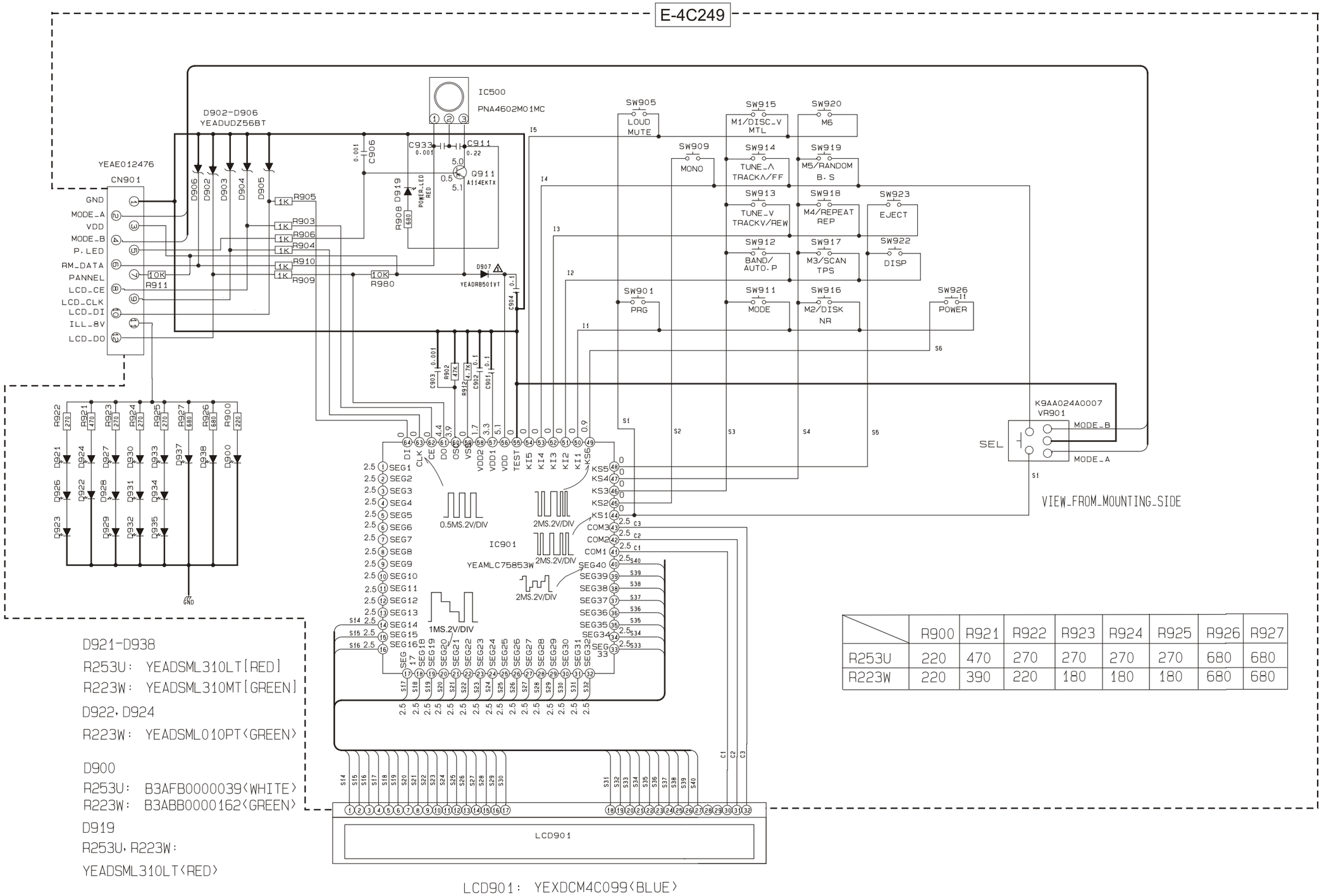

	R900	R921	R922	R923	R924	R925	R926	R927
R253U	220	470	270	270	270	270	680	680
R223W	220	390	220	180	180	180	680	680

E-4C244

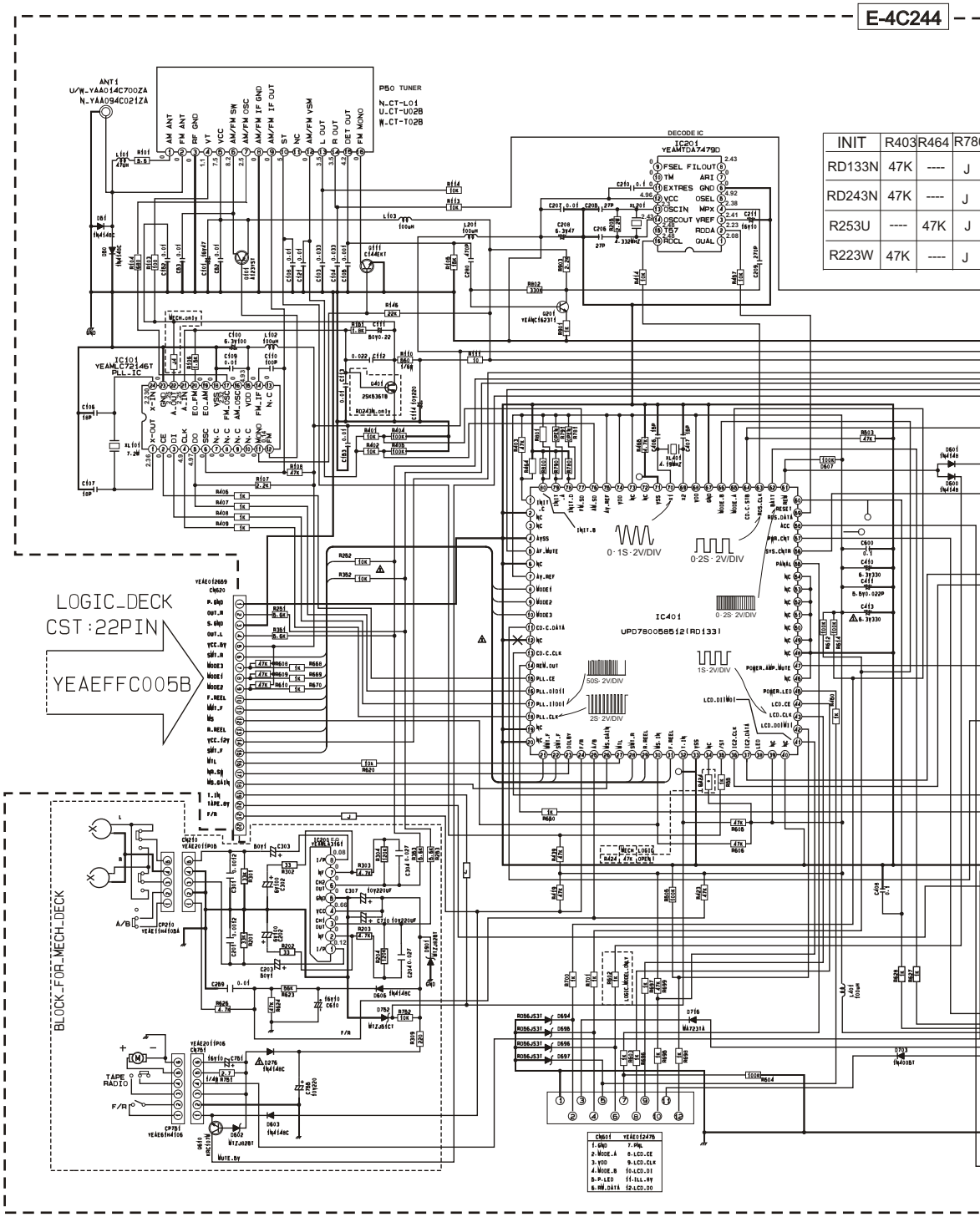

INIT	R403	R464	R78
RD133N	47K	----	J
RD243N	47K	----	J
R253U	----	47K	J
R223W	47K	----	J

E-4C244

INIT	R403	R464	R780	R790	R800	R801
RD133N	47K	----	J	J	J	----
RD243N	47K	----	J	J	----	47K
R253U	----	47K	J	J	J	----
R223W	47K	----	J	J	J	----

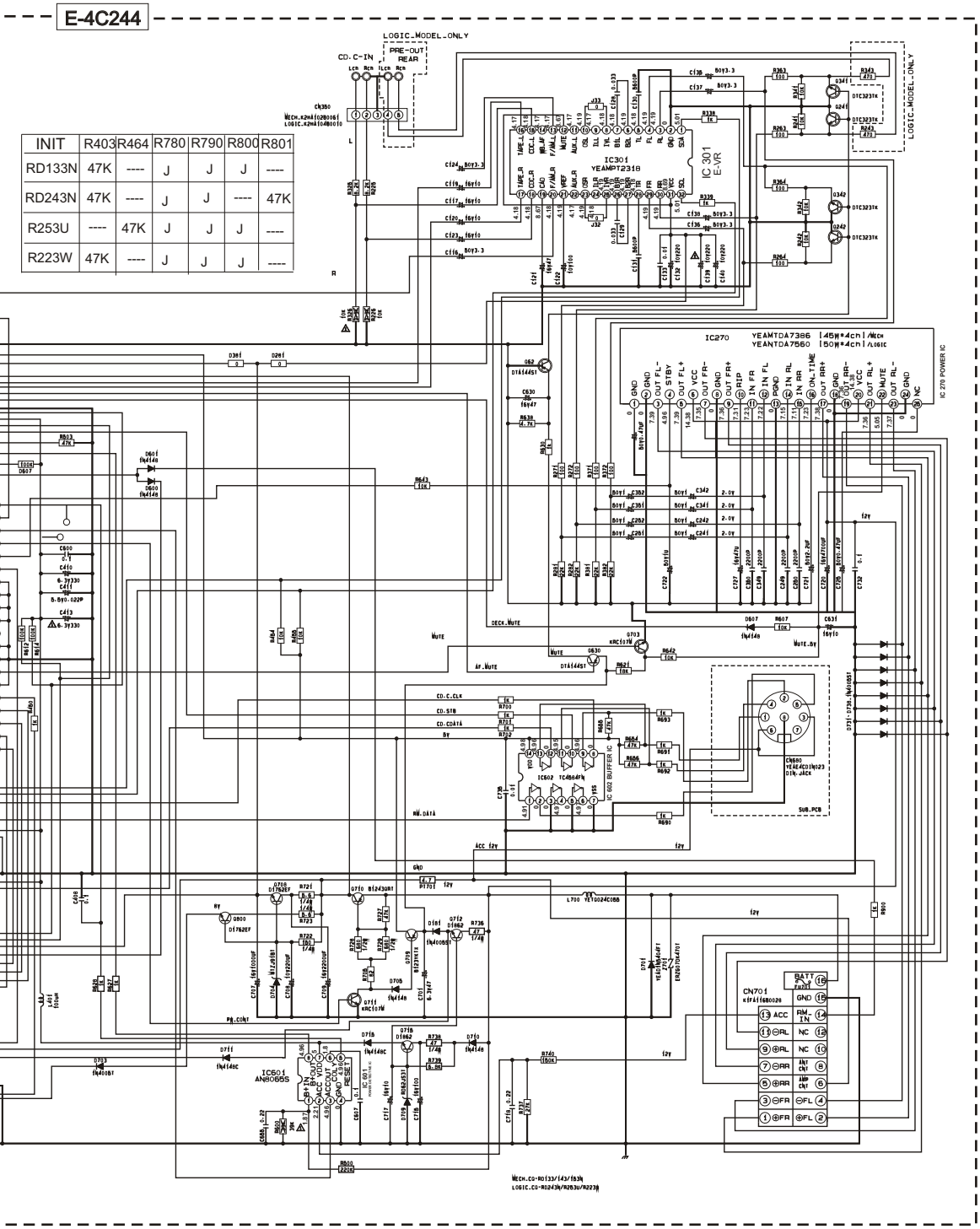

E-4C244

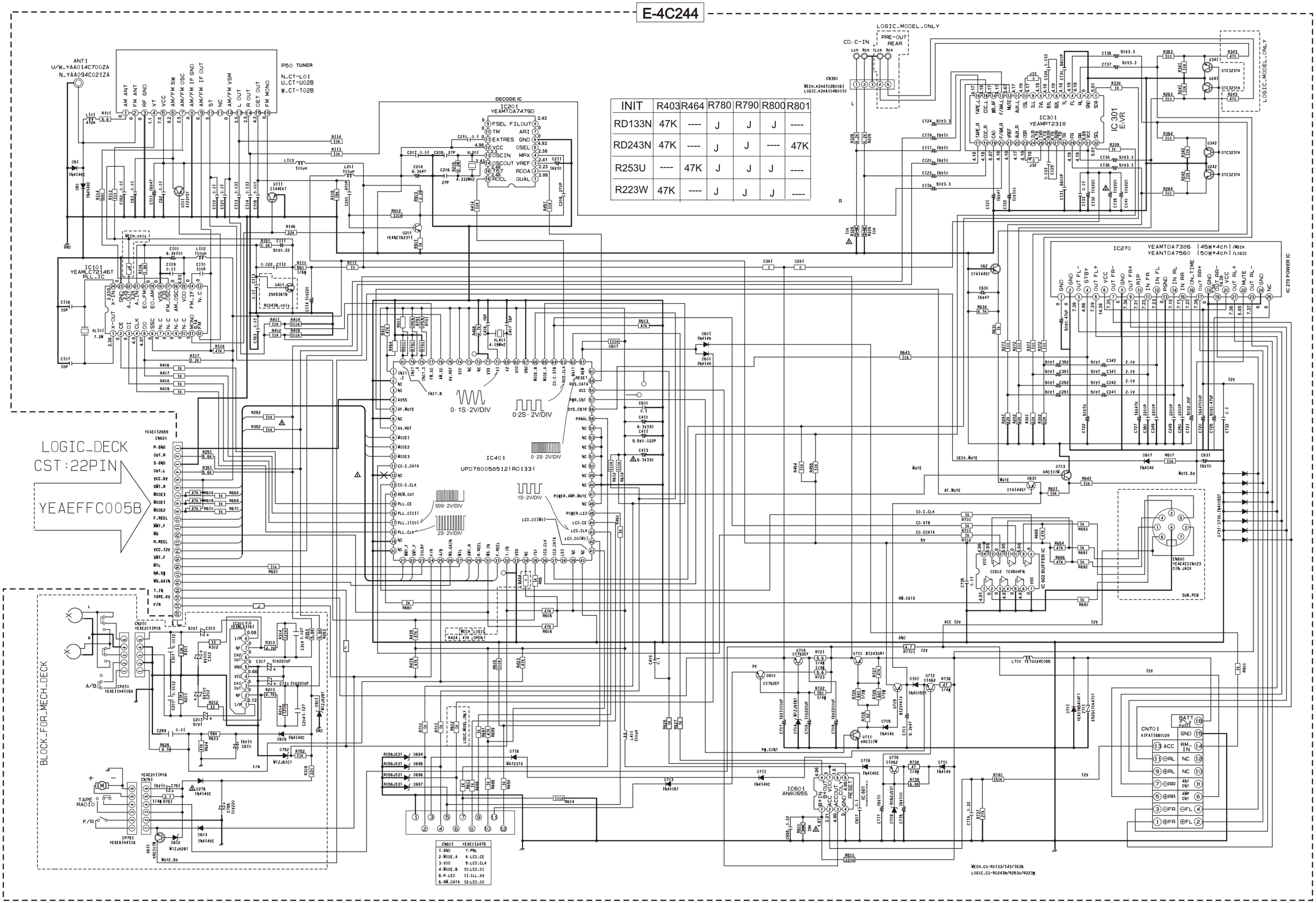

INIT	R403	R464	R780	R790	R800	R801
RD133N	47K	----	J	J	J	----
RD243N	47K	----	J	J	----	47K
R253U	----	47K	J	J	J	----
R223W	47K	----	J	J	J	----

CQ-RD133N/RD143N/RD153N/RD243N/R253U/R223W MAIN BLOCK

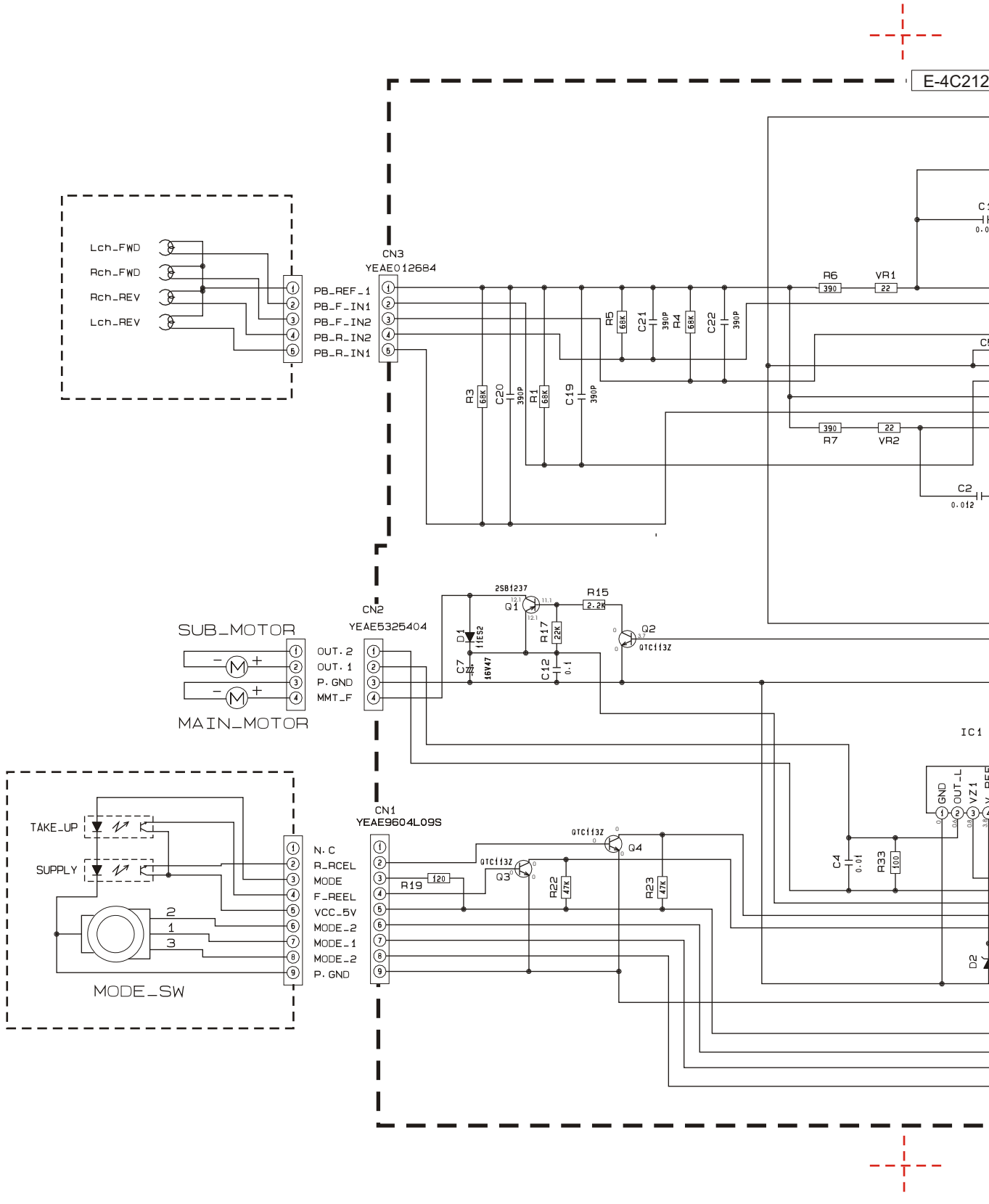
E-4C212
Lch_FWD
Rch_FWD
Rch_REV
Lch_REV
CN3
YEAE012684
PB_REF_1
PB_F_IN1
PB_F_IN2
PB_R_IN2
PB_R_IN1
R3 68K
C20 390P
R1 68K
C19 390P
R5 68K
C21 390P
R4 68K
C22 390P
R6 390
VR1 22
R7 390
VR2 22
C2 0.012
SUB_MOTOR
MAIN_MOTOR
CN2
YEAE5325404
OUT. 2
OUT. 1
P. GND
MMT_F
2SB1237
Q1
R15 2.2K
Q2
QTC113Z
D1 11ES2
R17 22K
C7 16V47
C12 0.1
IC1
GND
OUT-L
VZ1
C4 0.01
R33 100
D2
TAKE_UP
SUPPLY
MODE_SW
CN1
YEAE9604L09S
N. C
R_RCEL
MODE
F_REEL
VCC_5V
MODE_2
MODE_1
MODE_2
P. GND
R19 120
Q3
Q4
R22 47K
R23 47K

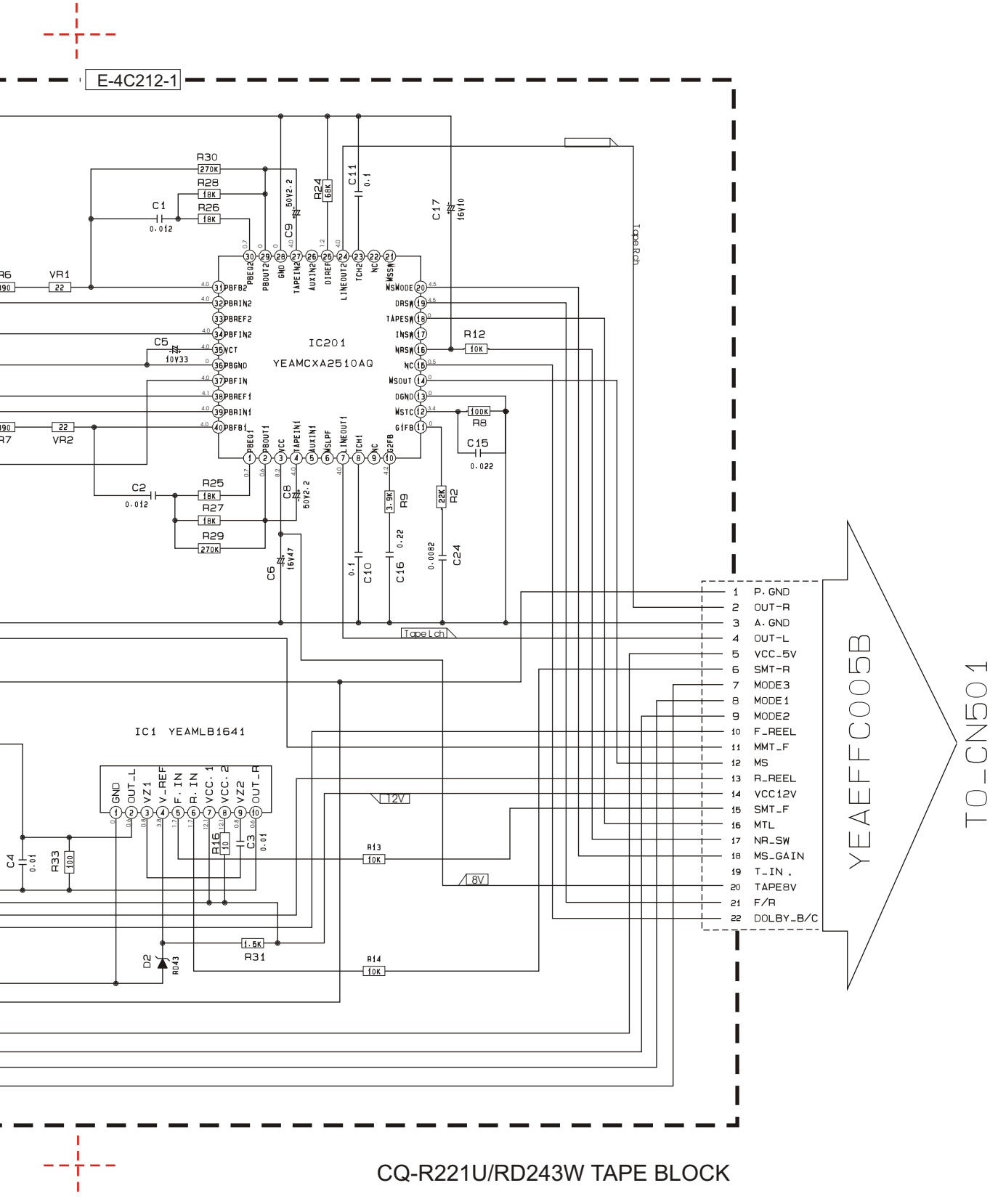

CQ-R221U/RD243W TAPE BLOCK

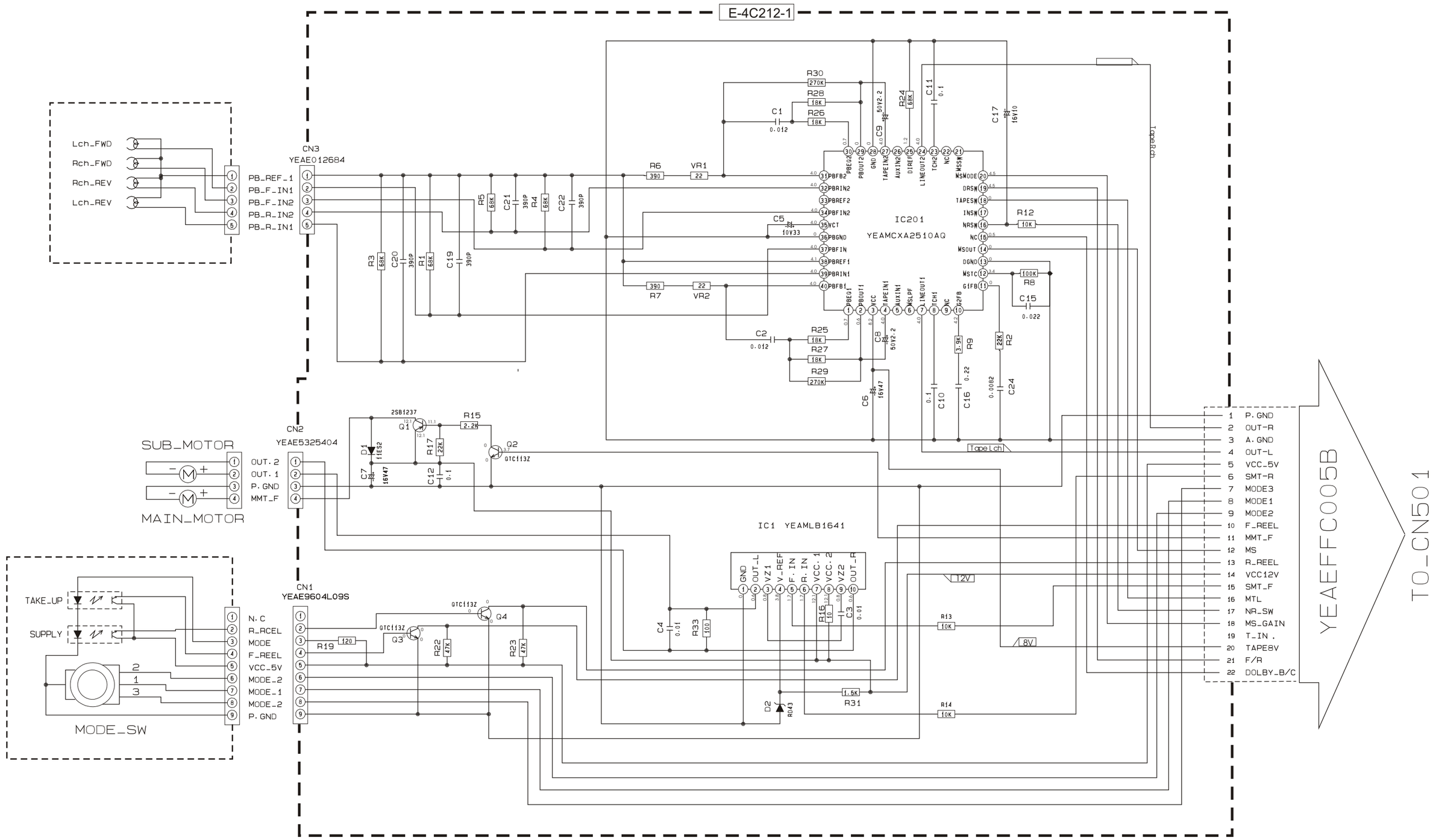

CQ-R221U/RD243W TAPE BLOCK

Specifications *

General

Power Supply	: 12V DC (11V-16V) Test Voltage 14.4V, Negative ground
Maximum Power Output	: 50W x4 channels at 400Hz, Volume Control maximum
Power Output	: 20 W per channel into 4 ohms, 40 to 30,000Hz, at 3% THD
Tone Action	: Bass; ± 12 dB at 100Hz Treble; ± 12 dB at 10kHz
Current Consumption	: Less than 2.5 A (tape mode, 0.5W 4-Speaker)
Speaker Impedance	: 4 Ω (4-8Ω acceptable)
Pre-Amp Output Voltage	: 2.0V (CD Play mode; 1kHz 0dB)

AM Radio

Frequence Range	: 531 - 1602 kHz
Useable Sensitivity	: 28 dB/μV (25 μV/ S/N 20dB)

FM Stereo Radio

Frequency Range	: 87.5 - 108 MHz
Useable Sensitivity	: 12 dBf. (1.1μV/75 Ω, S/N 30 dB)
50 dB Quieting Sensitivity	: 17 dBf. (1.8 μV/75Ω)
Frequency Response	: 30 - 15,000Hz (± 3dB)
Alternate Channel Sensitivity	: 75dB
Stereo Separation	: 35 dB (1kHz)
Signal/Noise Ratio	: 70 dB (Mono)

Tape Player

Reproduction System	: 4- track, 2-program stereo
Tape Speed	: 1-7/8" /sec (4.76cm/sec)
FF/REW Time	: Less than 200 sec (C-60)
Frequency Responce	:35-14,000Hz(±3dB)
Wow and Fluter	: 0.12 % (WRMS)
Signal/Noise Ratio	: 52 dB

Dimentions **(W x H x D)	: 7" x 1-15/16" x 5-7/8" (178 x 50 x 150 mm)
Weight	: 3 lbs. 8 oz. (1.6 kg)

* Specifications and the design are subject to possible modification
** without notice due to improvements.
*** Dimentions and weight shown are approximate.
Above specifications comply with EIA standards.

P50 CT-T02B

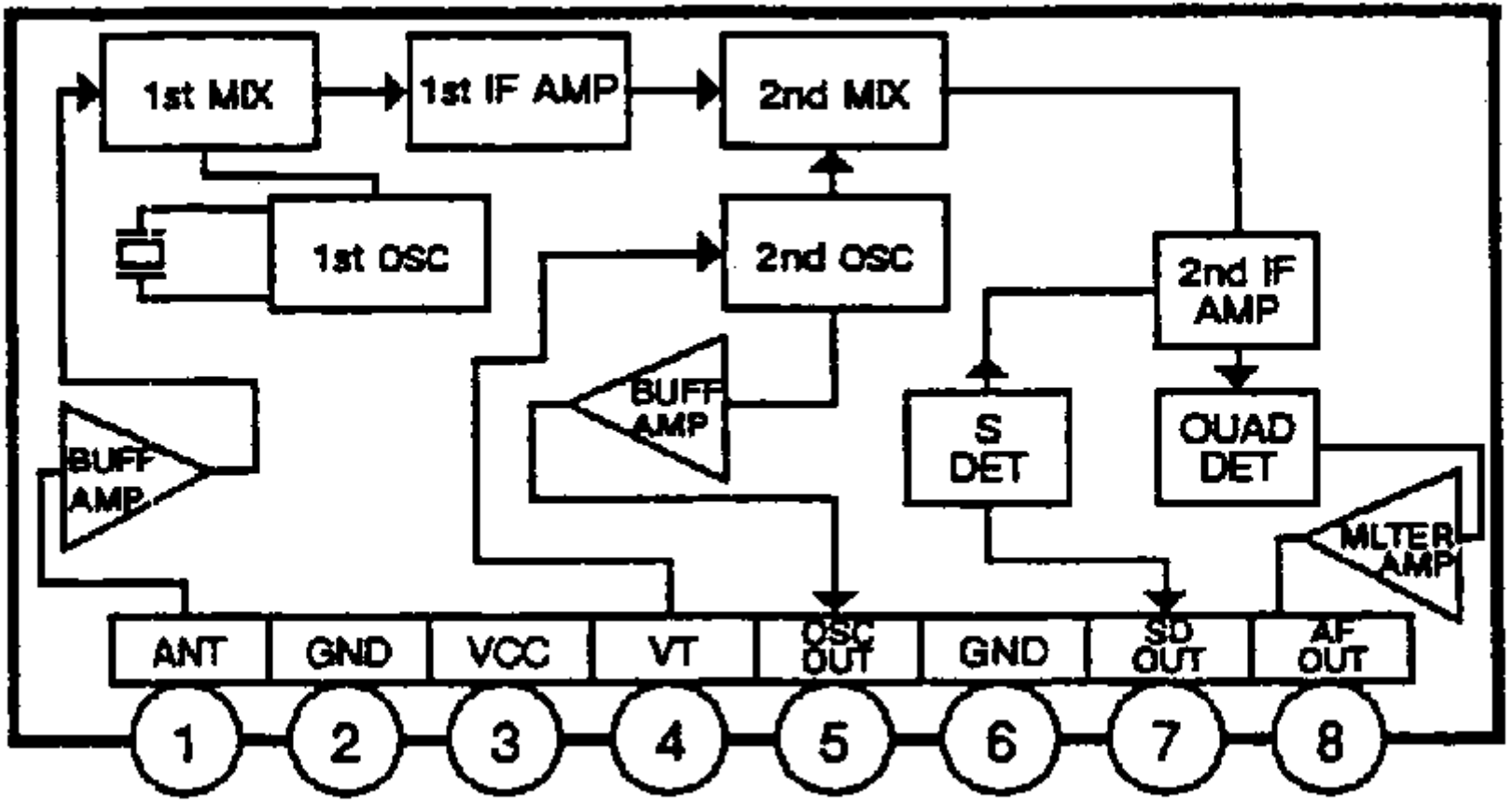
1st MIX
1st IF AMP
2nd MIX
1st OSC
2nd OSC
2nd IF AMP
BUFF AMP
BUFF AMP
S DET
QUAD DET
MLTER AMP
ANT
GND
VCC
VT
OSC OUT
GND
SD OUT
AF OUT
1
2
3
4
5
6
7
8

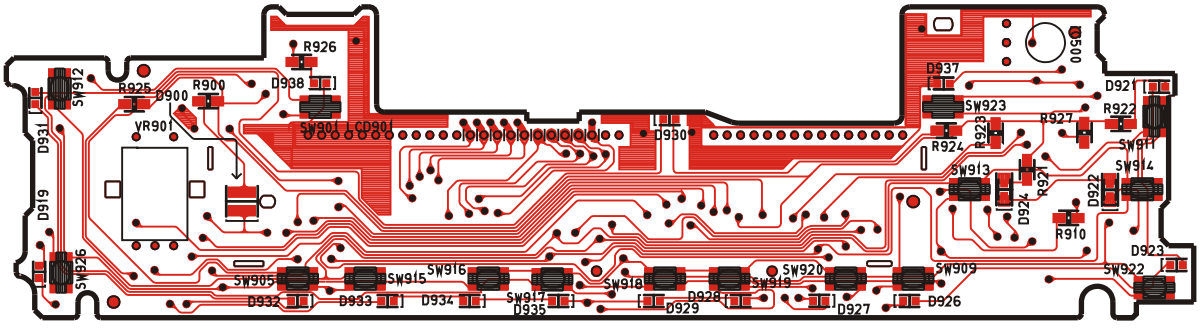

[E-4C249][TOP VIEW]

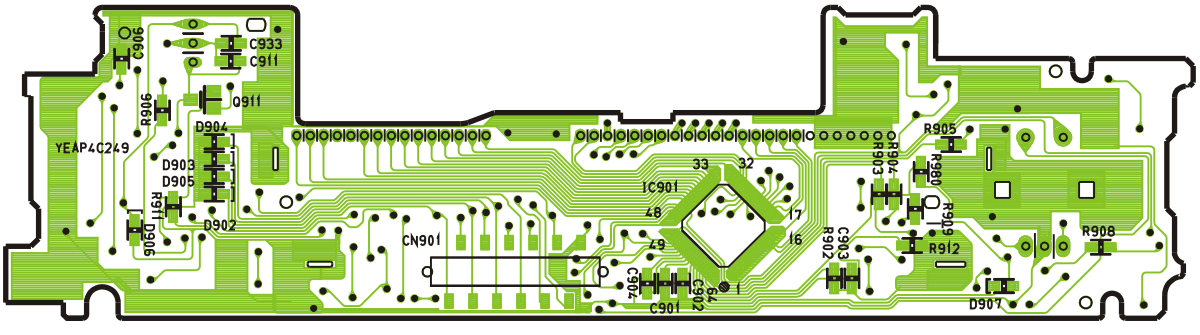

[E-4C249][BOTTOM VIEW]

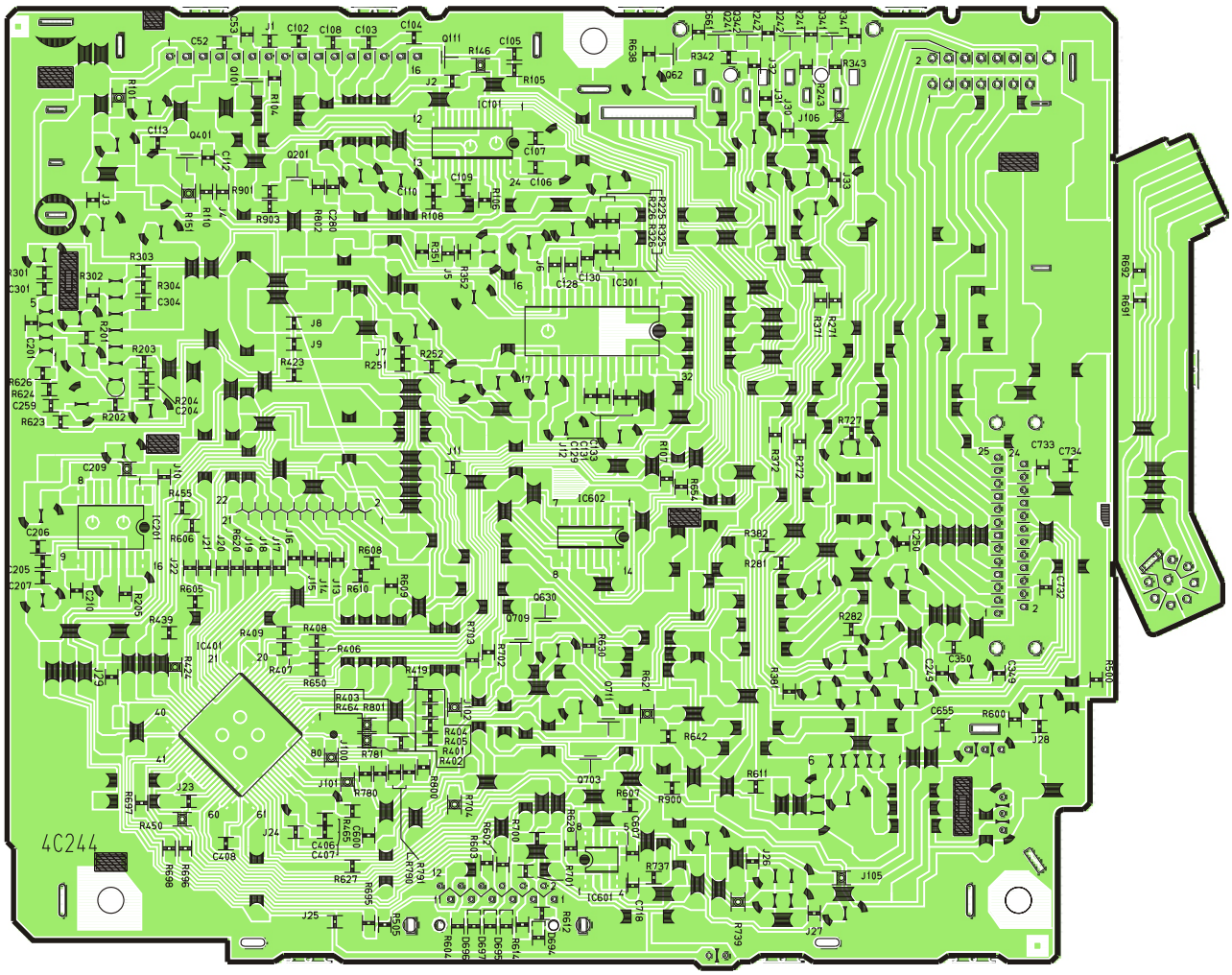

[E-4C244][BOTTOM VIEW]

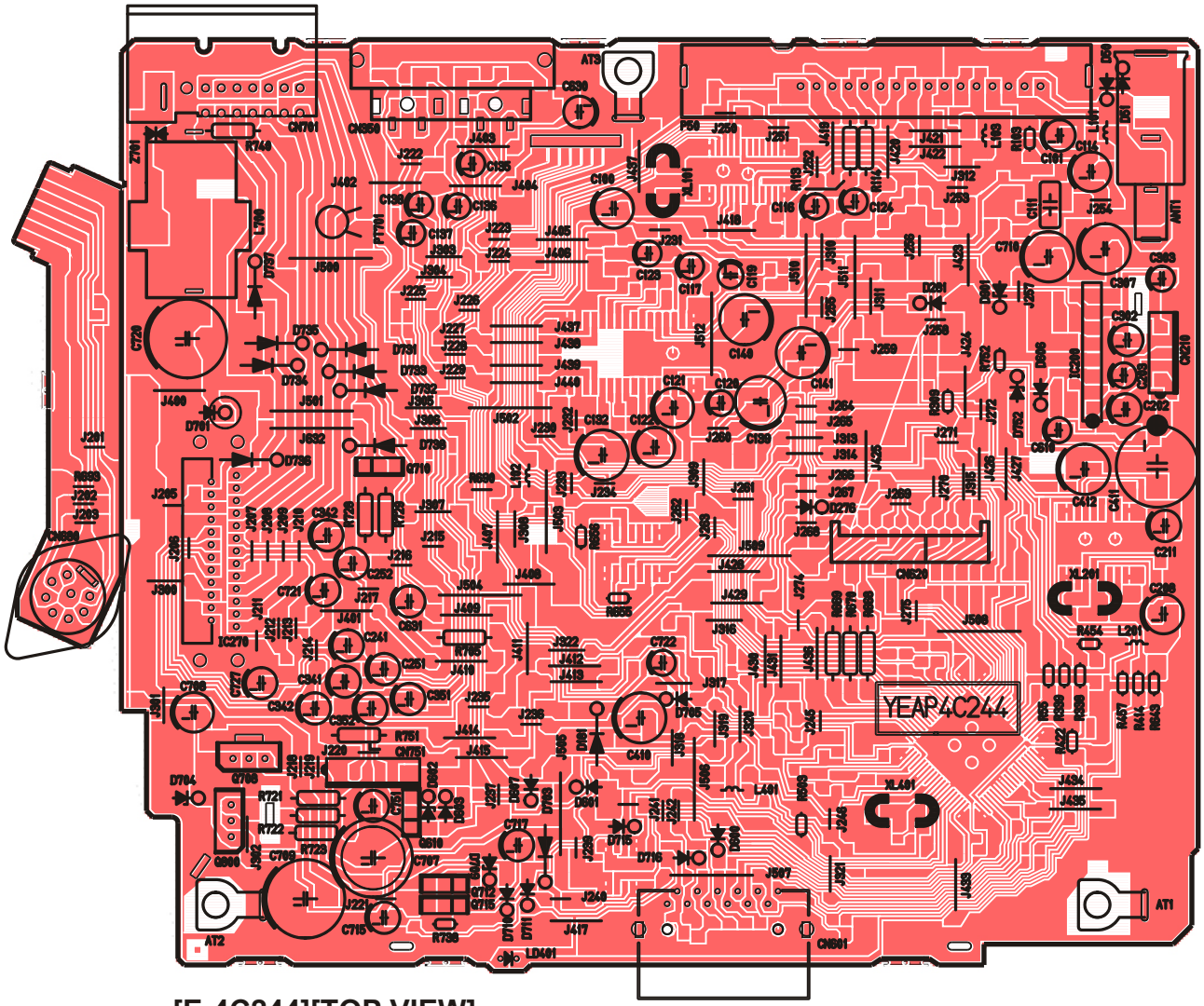

[E-4C244][TOP VIEW]

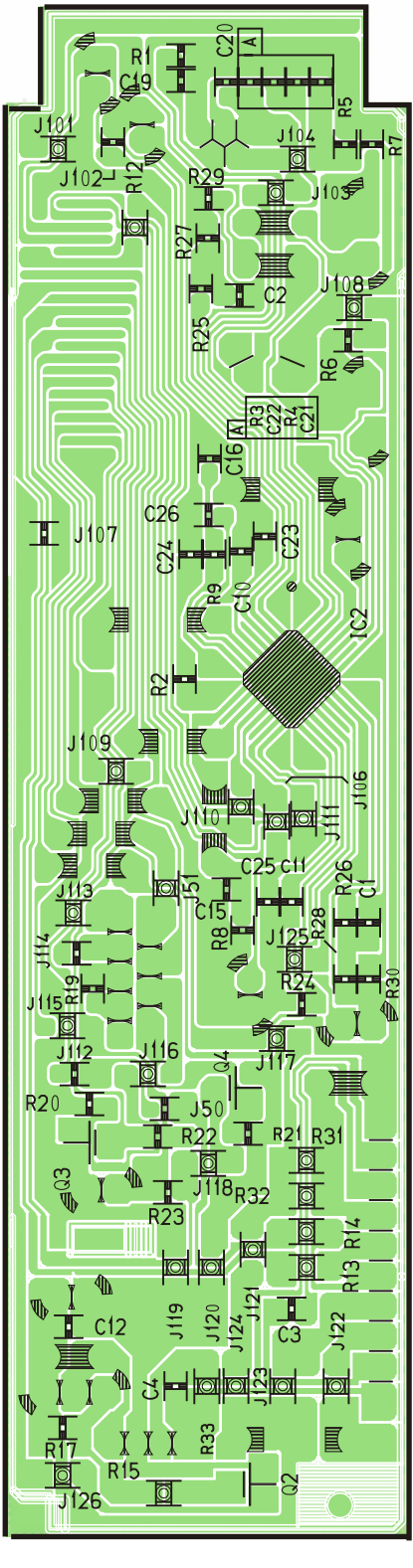

[E-4C212] [Bottom View]

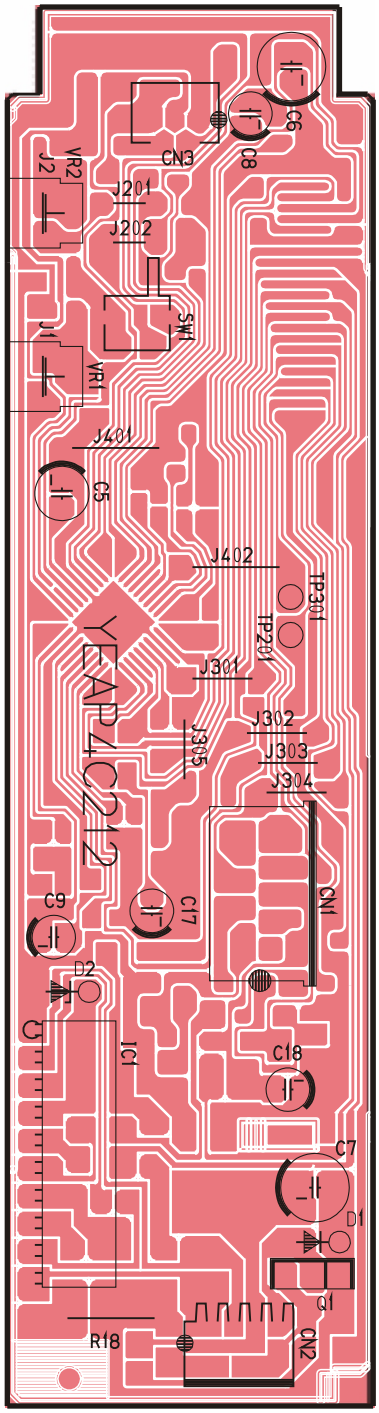

[E-4C212-1] [Top View]

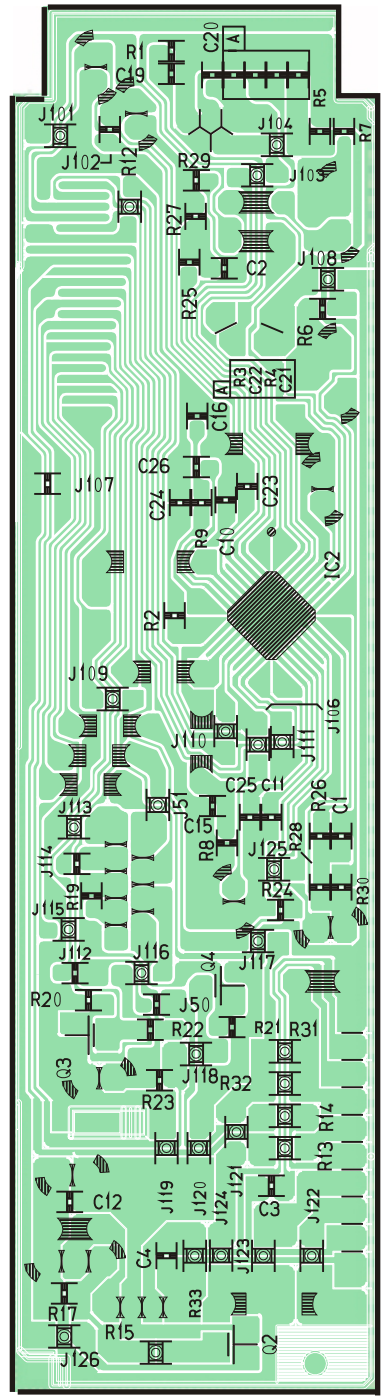

[E-4C212-1] [Bottom View]

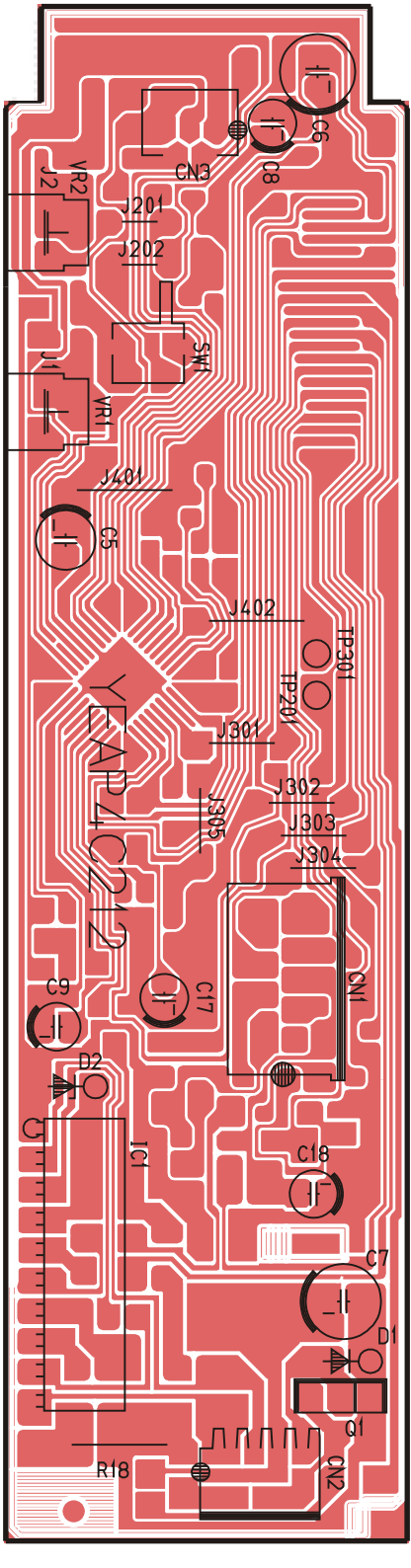

[E-4C212] [Top View]