ECLIPSE RADIO PTY. LTD.
(A DIVISION OF ELECTRONIC INDUSTRIES LTD.)
11-21 STURT STREET, SOUTH MELBOURNE
TECHNICAL BULLETIN

MODEL CQN

8 Valve Superheterodyne Four Band Mantel Model Receiver
Incorporating Bandspreading of the 19,
25 and 31 Metre Shortwave Bands.

FOR OPERATION FROM:—

32 volt D.C. Supply.

CURRENT CONSUMPTION:—

.85 Amps. (Does not include dial lamps or band indicator lamp).
1.1 Amps. (Includes three dial lamps and one band indicator lamp all wired in series. Each lamp 6-8 volt 0.25 amp.).

TUNING RANGE:—

Broadcast Band,	535-1610 Kc/s.	560.7-186.3 Metres
19 Metre band,	14.9-15.5 Mc/s (Bandspread)	20.13-19.29 Metres (approx.)
25 Metre band,	11.6-12.1 Mc/s (Bandspread)	25.86-24.79 Metres (approx.)
31 Metre band,	9.4-9.8 Mc/s (Bandspread)	31.91-30.61 Metres (approx.)

THIS BULLETIN CONTAINS:—

1. Alignment Instructions.
2. Circuit Diagram.
3. Component Parts List.
4. Connections for IF and RF Trans.

ALIGNMENT INSTRUCTIONS:—

ALIGNMENT CONDITIONS:—

Load impedance	–5,000 ohms
Output level	–50 milliwatts
Volume control	–Max. Vol. (fully clockwise)
Tone control	–Treble position
Intermediate freq.	–455 Kc/s
DC Supply	32 volt DC mains

EQUIPMENT:—

Signal generator	
Output meter	
Mica capacitor	–0.01 MFD
Dummy Antenna	–200 MMFD Mica capacitor
Dummy Antenna	–400 Ohm non-inductive resistor
Alignment tools	–Part No. M195 & PM581
IF. Attenuator	–Part No. M174

Operation No.	Generator Connection	Generator Frequency	Dummy Antenna	Instructions
1.	To control grid of 6U7G 2nd IF. valve.	455 Kc/s.	0.01 MFD Mica capacitor in series with generator.	Turn wave change switch to B/cast band. Leave grid clip on valve. Peak 3rd IF trans. pri. and sec. for max. output.
2.	To control grid of 6U7G 1st IF. valve.	455 Kc/s.	0.01 MFD Mica capacitor in series with generator.	Leave grid clip on valve. Peak 2nd IF. trans. pri. and sec. for max. output.
3.	To control grid of 6AN7 valve pin No. 2.	455 Kc/s.	0.01 MFD Mica capacitor in series with generator.	Cond. gang plates fully out of mesh. Leave grid wire connected to valve socket. Peak 1st IF. trans. pri. and sec. for max. output.
4.	Set centre of dial pointer on centre of end of travel mark on dial reading near 550 Kc/s. Cond. gang plates fully meshed.			
5.	To antenna terminal.	600 Kc/s.	200MMFD. Mica capacitor in series with generator.	Turn gang and dial pointer until dial pointer is on 600 Kc/s. dial mark. Leave the gang and dial pointer set in this position and peak the B/cast oscl. coil. ind. trim (iron core) for max. output.
6.	To antenna terminal.	1400 Kc/s.	200MMFD. Mica capacitor in series with generator.	Turn gang and dial pointer to 1400 Kc/s. dial mark. Adjust B/cast oscl. coil trim. cond. for logging and peak B/cast ant. and RF. trans. trim. condensers for max. output.
7.	To antenna terminal.	600 Kc/s.	200MMFD. Mica capacitor in series with generator.	Turn gang and dial pointer to 600 Kc/s. dial mark. Leave the gang and dial pointer set in this position. Re-peak the B/cast oscl. coil ind. trim. (iron core) then peak the B/cast ant. and RF. trans. ind. trimmers (iron cores) for max. output. Do not rock the gang to and fro through the signal while adjusting or move the dial pointer off 600 Kc/s. dial mark until after the inductance trimmers of these three transformers have been peaked for max. output.

8.	To antenna terminal.	1400 Kc/s.	200MMFD. Mica capacitor in series with generator.	Turn gang and dial pointer to 1400 Kc/s. dial mark. Adjust B/cast oscl. coil trim. cond. for logging and peak B/cast ant. and RF. trans. trim. condensers for max. output.

9. Turn wave change switch to 31 metre band (this band must be aligned before the 25 and 19 metre bands).

10.	To antenna terminal.	9.6 Mc/s.	400 Ohm non-inductive resistor in series with generator.	Turn dial pointer and gang to 9.6 Mc/s. Adjust 31 metre band oscl. coil ind. trim. (iron core) for logging and peak 31 metre ant. and RF. trans. ind. trimmers (iron cores) for max. output. Rock gang to and fro through the signal while adjusting.
11.	To antenna terminal.	11.8 Mc/s.	400 Ohm non-inductive resistor in series with generator.	Turn wave change switch to 25 metre band. Turn dial pointer and gang to 11.8 Mc/s. Adjust 25 metre band oscl. coil ind. trim. (iron core) for logging and peak ant. and RF. trans. ind. trimmers (iron cores) for max. output. Rock gang to and fro through the signal while adjusting.
12.	To antenna terminal.	15.2 Mc/s.	400 Ohm non-inductive resistor in series with generator.	Turn wave change switch to 19 metre band. Turn dial pointer and gang to 15.2 Mc/s. Adjust 19 metre band oscl. coil ind. trim. (iron core) for logging and peak ant. and RF. trans. ind. trimmers (iron cores) for max. output. Rock gang to and fro through the signal while adjusting.

13. Check the logging of the shortwave bands on some well-known shortwave stations. If a crystal calibrator is available check the logging at each 100 Kc/s. mark on the dial.

BANDSPREAD COILS:—

31 metre coil, RED spot on iron core end of former.

25 metre coil, WHITE spot on iron core end of former.

19 metre coil, BLUE spot on iron core end of former.

NOTE:—

The I.F. attenuator part No. M174 (.004 MF cond. and a 20 K. ohm. resistor in series) is connected between the 6U7G 1st. IF. valve control grid and chassis during alignment of the RF. and antenna stages and during the measurement of the overall sensitivity.

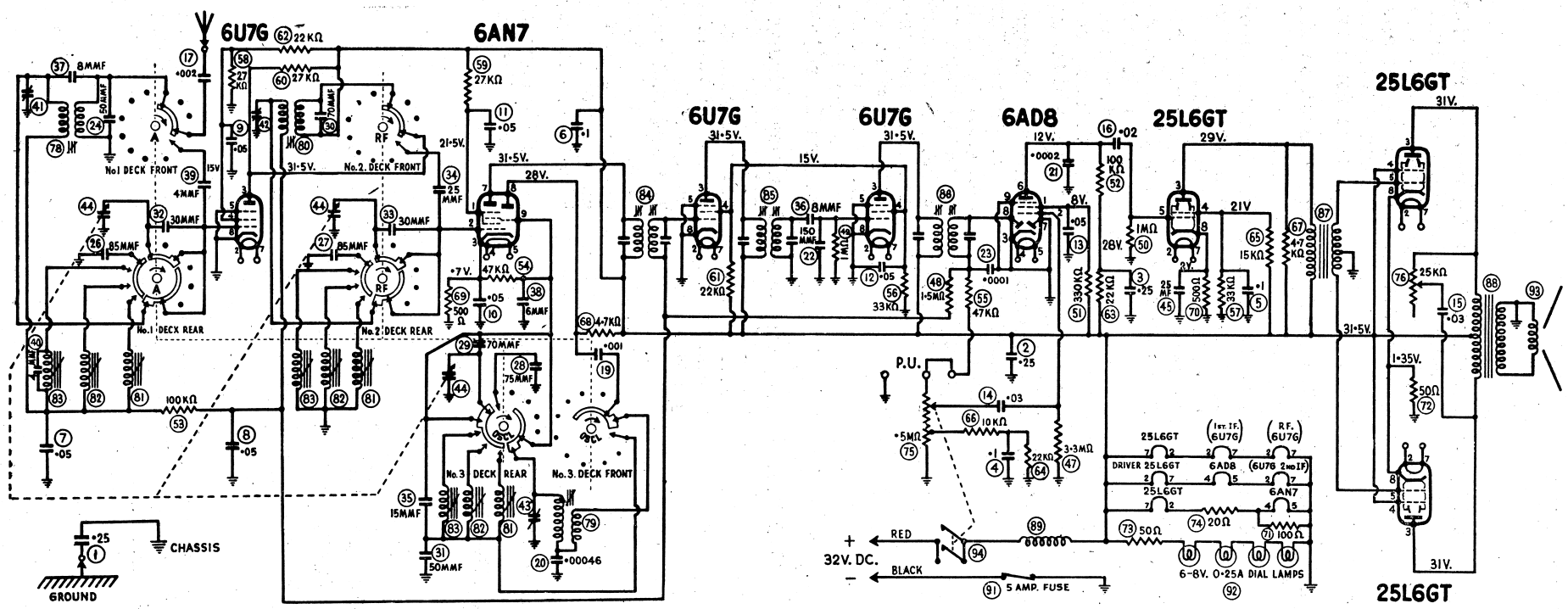

VOLTAGES ON CIRCUIT ARE MEASURED BETWEEN POINTS INDICATED AND CHASSIS WITH A DC. VACUUM TUBE VOLTMETER, 32VOLT DC. INPUT WHEN MEASURING VOLTAGES IN HIGH IMPED. CIRCUITS,- LOWER READINGS THAN THOSE SHOWN WILL BE OBTAINED - IF A V.T.V.M. IS NOT USED- DEPENDING ON THE RESISTANCE OF THE METER USED. EG: 1000 Ω/VOLT OR 20,000 Ω/ VOLT.

PB691

The first production run, chassis serial numbers 2501 to 2600 were incorrectly wired. The shortwave bandspread antenna coils circuit Nos. 81, 82 and 83 are wired to the chassis instead of being wired to the A.V.C. line as shown by the circuit. An improvement in A.V.C. action on shortwaves will be noted if the above correction is made.

Circuit No.	Description	Tol. ±	Rating	Part No.
1.	.25 MF Paper condenser	20%	200V. DCW	PC146
2.	.25 MF Paper condenser	20%	200V. DCW	PC146
3.	.25 MF ,, ,,	20%	200V. DCW	PC146
4.	.1 MF ,, ,,	20%	200V. DCW	PC218
5.	.1 MF ,, ,,	20%	200V. DCW	PC218
6.	.1 MF ,, ,,	20%	200V. DCW	PC218
7.	.05 MF ,, ,,	20%	200V. DCW	PC102
8.	.05 MF ,, ,,	20%	200V. DCW	PC102
9.	.05 MF ,, ,,	20%	200V. DCW	PC102
10.	.05 MF ,, ,,	20%	200V. DCW	PC102
11.	.05 MF ,, ,,	20%	200V. DCW	PC102
12.	.05 MF ,, ,,	20%	200V. DCW	PC102
13.	.05 MF ,, ,,	20%	200V. DCW	PC102
14.	.03 MF ,, ,,	20%	200V. DCW	PC303
15.	.03 MF ,, ,,	20%	400V. DCW	PC624
16.	.02 MF ,, ,,	20%	400V. DCW	PC111
17.	.002 MF ,, ,,	20%	600V. DCW	PC112
18.				
19.	.001 MF Mica Condenser	10%	500V. DCW	PC108
20.	.00046 MF ,, ,,	2½%	500V. DCW	PC728
21.	.0002 MF ,, ,,	10%	500V. DCW	PC124
22.	.00015 MF ,, ,,	10%	500V. DCW	PC917
23.	.0001 MF ,, ,,	10%	500V. DCW	PC110
24.	.00005 MF ,, ,,	10%	500V. DCW	PC141
25.				
26.	85 MMF Silvered mica condenser	2½%	500V. DCW	PC809
27.	85 MMF ,, ,, ,,	2½%	500V. DCW	PC809
28.	75 MMF ,, ,, ,,	2½%	500V. DCW	PC871
29.	70 MMF ,, ,, ,,	2½%	500V. DCW	PC799
30.	70 MMF ,, ,, ,,	2½%	500V. DCW	PC799
31.	50 MMF ,, ,, ,,	2½%	500V. DCW	PC801
32.	30 MMF ,, ,, ,,	1 MMF	500V. DCW	PC810
33.	30 MMF ,, ,, ,,	1 MMF	500V. DCW	PC810
34.	25 MMF ,, ,, ,,	1 MMF	500V. DCW	PC802
35.	15 MMF ,, ,, ,,	+1 MMF-0	500V. DCW	PC811
36.	8 MMF ,, ,, ,,	+.5MMF-1MMF	500V. DCW	PC874
37.	8 MMF Ceramicon Condenser	+.5MMF-1MMF	500V. DCW	PC832
38.	6 MMF ,, ,,	+1 MMF - 0	500V. DCW	PC831
39.	4 MMF ,, ,,	+1 MMF - 0	500V. DCW	PC830
40.	4 MMF ,, ,,	+1 MMF - 0	500V. DCW	PC830
41.	1.5 – 18 MMF Trimmer Condenser			PC250
42.	1.5 – 18 MMF ,, ,,			PC250
43.	0-30 MMF ,, ,, wire wound			PC663
44.	3 Gang Variable Condenser			PC652
45.	25 MF Electrolytic Condenser	20%	40 PV	PC660
46.				
47.	3.3 Megohm Carbon Resistor	10%	½ W.	R3352
48.	1.5 Megohm ,, ,,	10%	½ W.	R1552
49.	1 Megohm ,, ,,	10%	½ W.	R1052
50.	1 megohm ,, ,,	10%	½ W.	R1052
51.	330,000 ohm Carbon resistor	10%	½ W.	R3342
52.	100,000 ohm ,, ,,	10%	½ W.	R1042
53.	100,000 ohm ,, ,,	10%	½ W.	R1042
54.	47,000 ohm ,, ,,	10%	½ W.	R4732
55.	47,000 ohm ,, ,,	10%	½ W.	R4732
56.	33,000 ohm ,, ,,	10%	½ W.	R3332
57.	33,000 ohm ,, ,,	10%	½ W.	R3332

Circuit No.	Description	Tol. ±	Rating	Part No.
58.	27,000 ohm ,, ,,	10%	½ W.	R2732
59.	27,000 ohm ,, ,,	10%	½ W.	R2732
60.	27,000 ohm ,, ,,	10%	½ W.	R2732
61.	22,000 ohm ,, ,,	10%	½ W.	R2232
62.	22,000 ohm ,, ,,	10%	½ W.	R2232
63.	22,000 ohm ,, ,,	10%	½ W.	R2232
64.	22,000 ohm ,, ,,	10%	½ W.	R2232
65.	15,000 ohm ,, ,,	10%	½ W.	R1532
66.	10,000 ohm ,, ,,	10%	½ W.	R1032
67.	4,700 ohm ,, ,,	10%	½ W.	R4722
68.	4,700 ohm ,, ,,	10%	½ W.	R4722
69.	500 ohm ,, ,,	10%	½ W.	PR274
70.	500 ohm ,, ,,	10%	½ W.	PR274
71.	100 ohm ,, ,,	10%	1 W.	PR519
72.	50 ohm Wire Wound ,,	10%	½ W.	PR280
73.	50 ohm ,, ,, ,,	5%	5 W.	PR708
74.	20 ohm ,, ,, ,,	10%	3 W.	PR759
75.	.5 Megohm carbon potentiometer tapped at 40 K.ohms DP. ST. switch attached	20%	-	PR662
76.	25,000 ohm carbon potentiometer	20%	-	PR761
77.				
78.	Antenna trans. b/cast			PT905
79.	Oscl. coil b/cast			PT860
80.	R.F. Trans. b/cast			PT906
81.	19 metre spreadband coil (blue spot on former)			PT914
82.	25 metre ,, ,, (white ,, ,, ,,)			PT913
83.	31 metre ,, ,, (red ,, ,, ,,)			PT912
84.	No. 1 I.F. Trans. 455 kc/s.			PT869
85.	No. 2 I.F. ,, ,, ,,			PT869
86.	No. 3 I.F. ,, ,, ,,			PT869
87.	Driver transformer			PT190
88.	Speaker input trans. 5000-3.7 ohms imped code No. KTL31			PT995
89.	Filter choke			PT111
90.				
91.	5amp cartridge type fuse			PM894
92.	Dial lamp 6 – 8V. 0.25 A. min. screw base T3¼ size bulb			PM678
93.	6″ Permag. speaker 6L type magnet			K176
94.	ON/OFF Switch part of vol. control circuit No. 75			

Socket - 8 pin	PM532	Grid Clip	873/495
Socket - 9 pin	279/250	Pulley ⅝″ dia. - wood	13/613
Valve shield - 6U7G	PM217	Pulley ¾″ dia. - wood	17/87
Valve shield earth contact	22/30C	Studs – pulley mtg.	18/87
Grommet - on power cord	40/30C	Tuning spindle assy.	A116/698
Grommet - cond. mtg.	64/30C	Dial pointer assy.	A108/698
Clip for I.F. trans. Mtg.	7/670	Cabinet back	54/698-2
Clip for R.F. Coil Mtg.	6/622	Clips – back retaining	17/620
Dial drum assy.	A104/698	Band Indicator Lamp Socket	A110/698
Speaker lead junction Strip Assy.	A150/30C	Dial lamp socket assy.	A570/30C
Control knob clips	22/755	Band indicator lamp shield	24/698
Dial Reading	55/698	Light button – red	27/698-1
Pick-up plug assy.	A101/513	Light button – clear	27/698-3
Fuse mt. Strip	67/698	Light button – blue	27/698-4
Fuse clips	65/245	Light button – green	27/698-2
Dial Reading Clips	56/698	Cabinet	190/81
Knobs – side	188/81	Cabinet	A138/30C
Knobs – front	187/81-1	Speaker Ring	52/698
		Speaker Gacket	5/358

DIAL DRIVE:—

Length of cord required is 5ft. 6ins. which includes about 6ins. to spare for tying to the tension spring.
Cord part No. 34/754.
Tension Spring part No. 21/698.

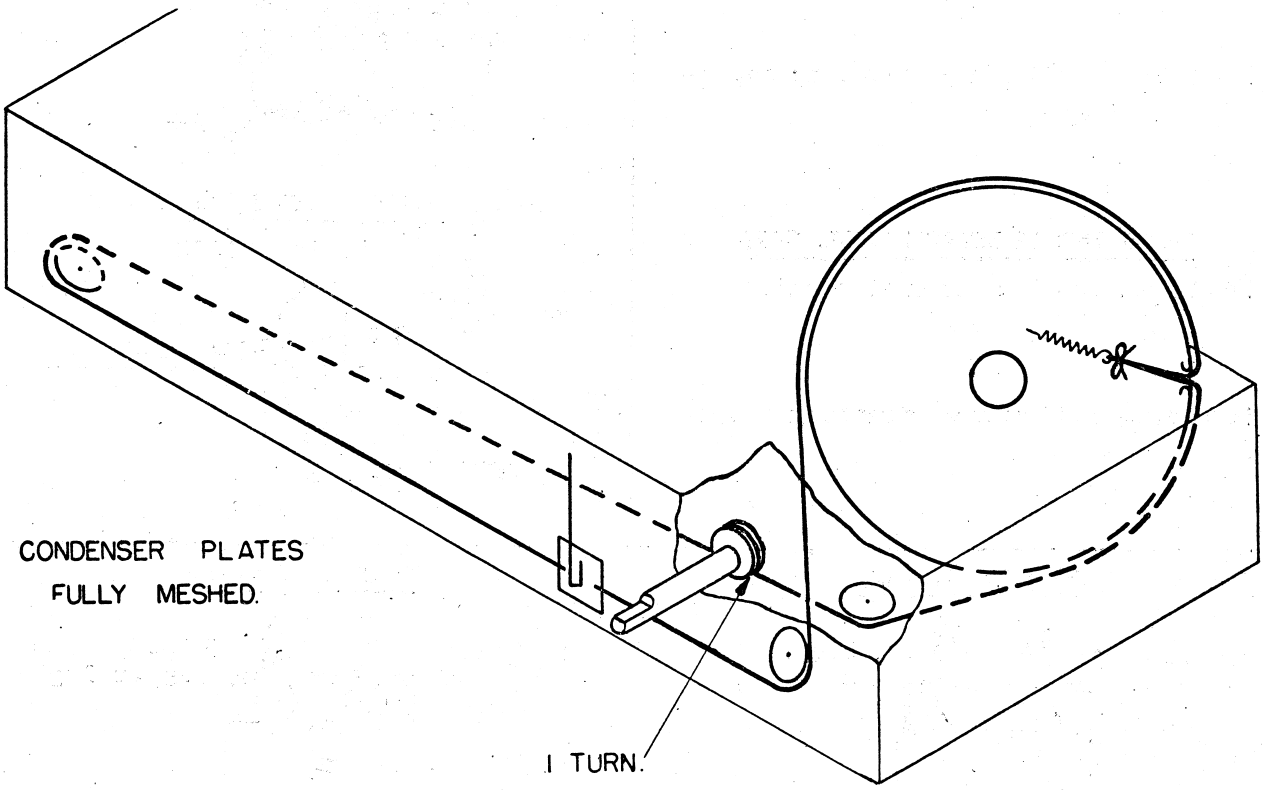

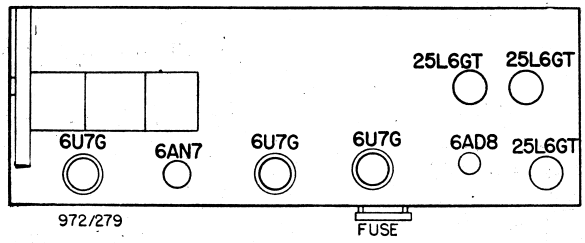

19, 25 AND 31 METRE ANT. TRANS.

Lead from top lug (iron core end) :-
GRID

Lead from bottom lug (mounting end) :-
AVC.

19, 25 AND 31 METRE RF. TRANS.

Lead from top lug (iron core end) :-
GRID

Lead from bottom lug (mounting end) :-
CHASSIS

19, 25 AND 31 METRE OSCL. COIL

Lead from top lug (iron core end) :-
GRID

Lead from bottom lug (mounting end) :-
PLATE

ANTENNA TRANS. B/CAST.

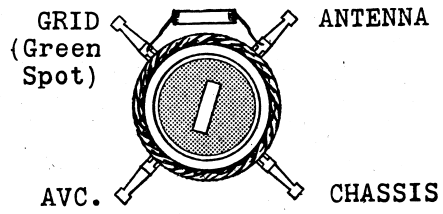

RF. TRANS. B/CAST.

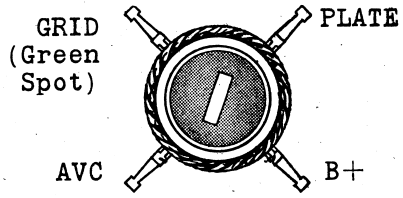

OSCL. COIL B/CAST

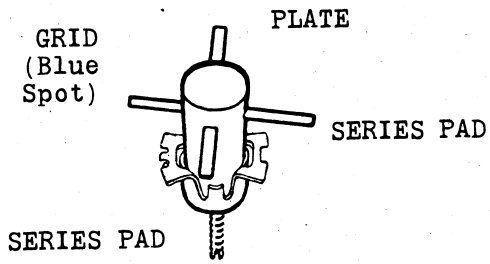

No. 1 IF. TRANS.

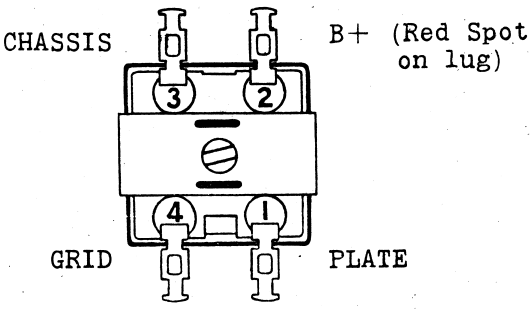

No. 2 IF. TRANS.

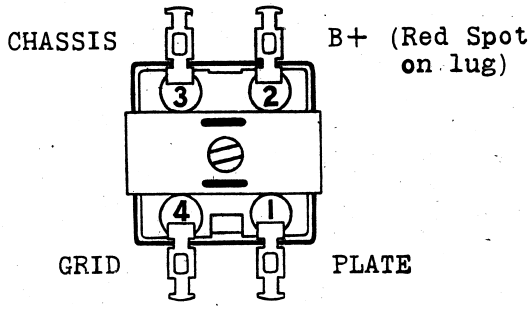

No. 3. IF. TRANS.

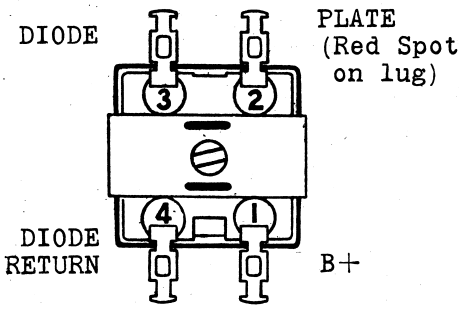

DRIVER TRANS.:—

PRI. Red - B+
Blue - Plate

SEC. Yellow- Grid
Black - Chassis
Green - Grid