MP3
APM
Panasonic
CQ-DP171U
CD RECEIVER WITH CHANGER CONTROL
45Wx4
FOLDER
VOL
BAND
SEL
TUNE
TRACK
DISP
PWR
SOURCE
REMOTE
RANDOM
SCAN
REPEAT
MUTE
1
2
3
4
5
6
LOUD

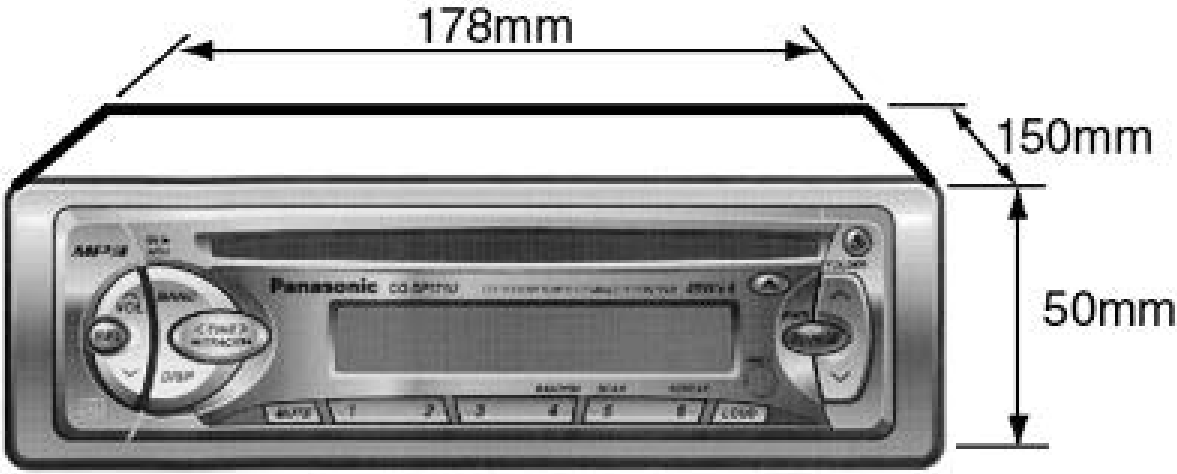
178mm
150mm
50mm
Panasonic
BAND
DISP
MUTE
1
2
3
4
5
6
LOUD

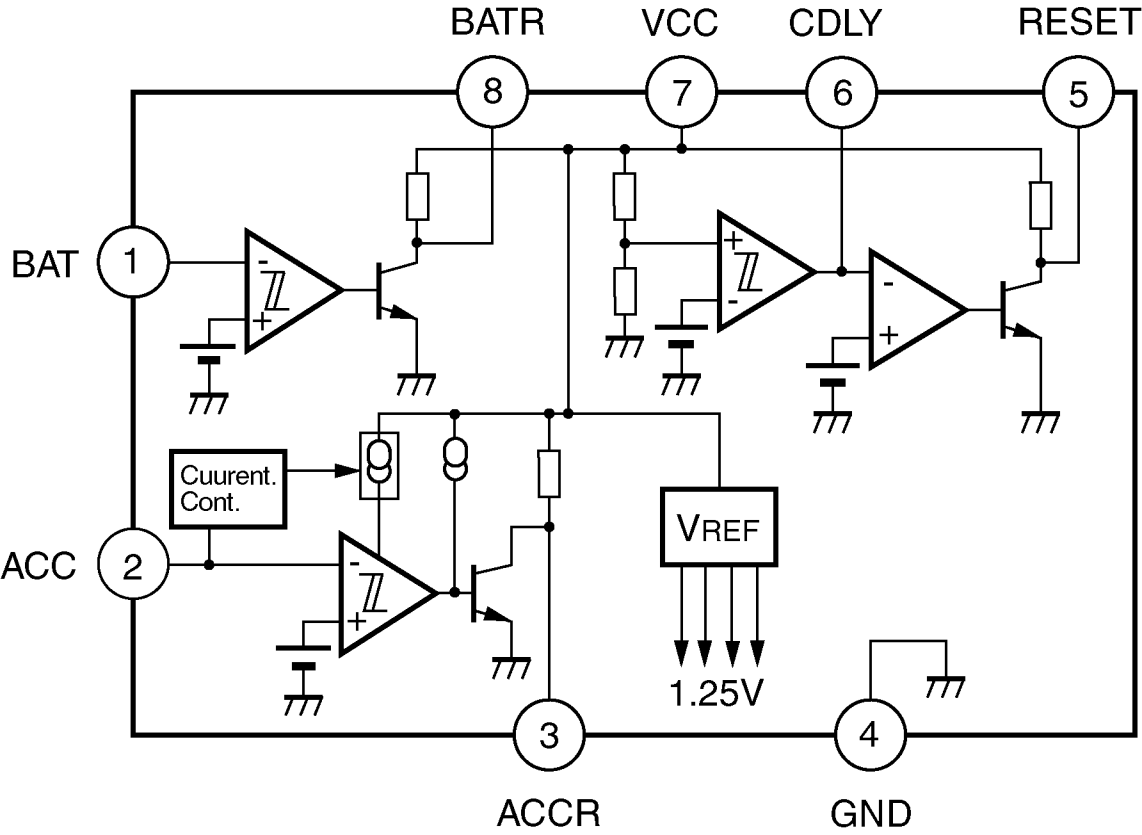
BATR
VCC
CDLY
RESET
8
7
6
5
BAT
1
Cuurent.
Cont.
ACC
2
VREF
1.25V
3
4
ACCR
GND

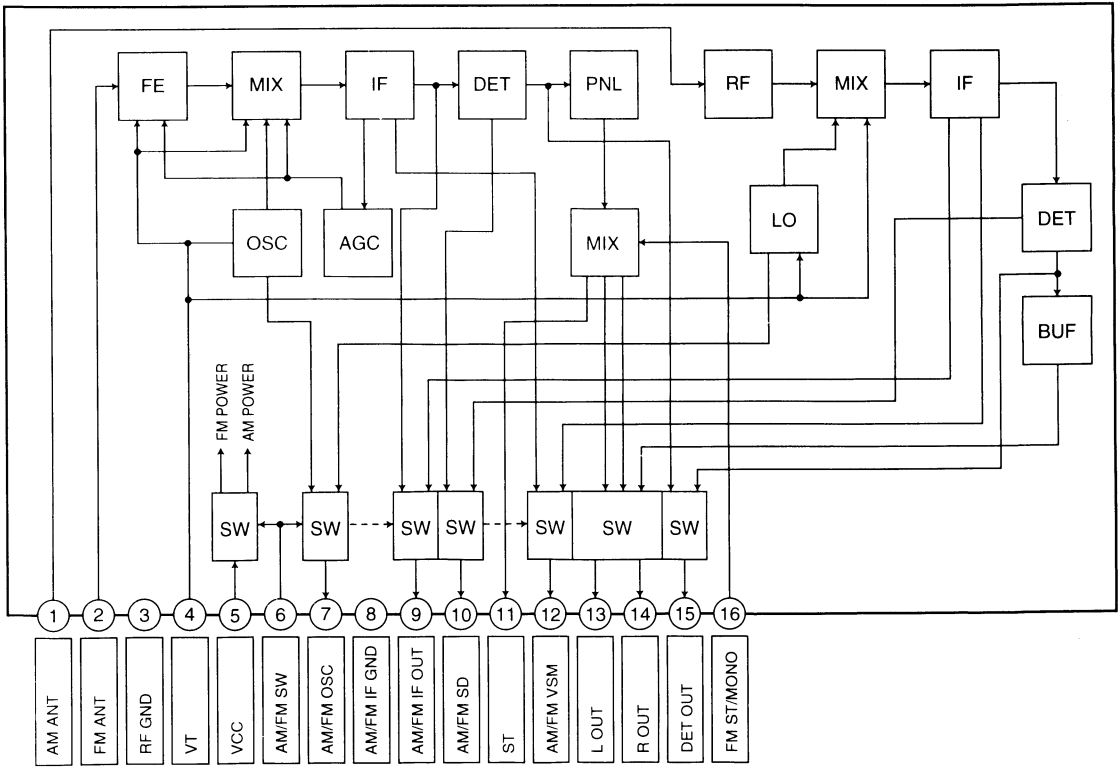
FE
MIX
IF
DET
PNL
RF
MIX
IF
OSC
AGC
MIX
LO
DET
BUF
FM POWER
AM POWER
SW
SW
SW
SW
SW
SW
SW
1
2
3
4
5
6
7
8
9
10
11
12
13
14
15
16
AM ANT
FM ANT
RF GND
VT
VCC
AM/FM SW
AM/FM OSC
AM/FM IF GND
AM/FM IF OUT
AM/FM SD
ST
AM/FM VSM
L OUT
R OUT
DET OUT
FM ST/MONO

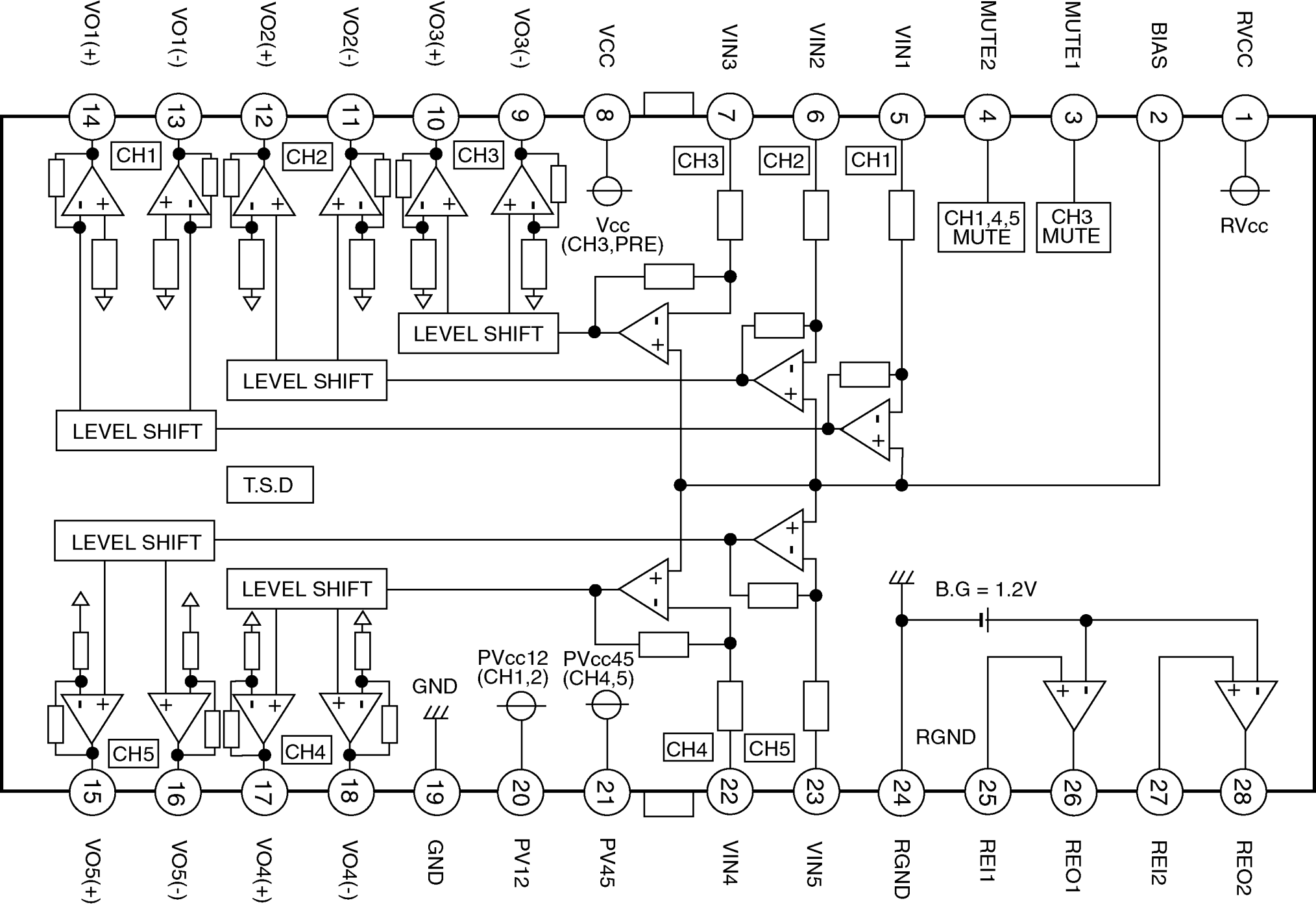
VO1(+)
VO1(-)
VO2(+)
VO2(-)
VO3(+)
VO3(-)
VCC
VIN3
VIN2
VIN1
MUTE2
MUTE1
BIAS
RVCC
14
13
12
11
10
9
8
7
6
5
4
3
2
1
CH1
CH2
CH3
CH3
CH2
CH1
Vcc
(CH3,PRE)
CH1,4,5
MUTE
CH3
MUTE
RVcc
LEVEL SHIFT
LEVEL SHIFT
LEVEL SHIFT
T.S.D
LEVEL SHIFT
LEVEL SHIFT
B.G = 1.2V
PVcc12
(CH1,2)
PVcc45
(CH4,5)
GND
CH5
CH4
CH4
CH5
RGND
15
16
17
18
19
20
21
22
23
24
25
26
27
28
VO5(+)
VO5(-)
VO4(+)
VO4(-)
GND
PV12
PV45
VIN4
VIN5
RGND
REI1
REO1
REI2
REO2

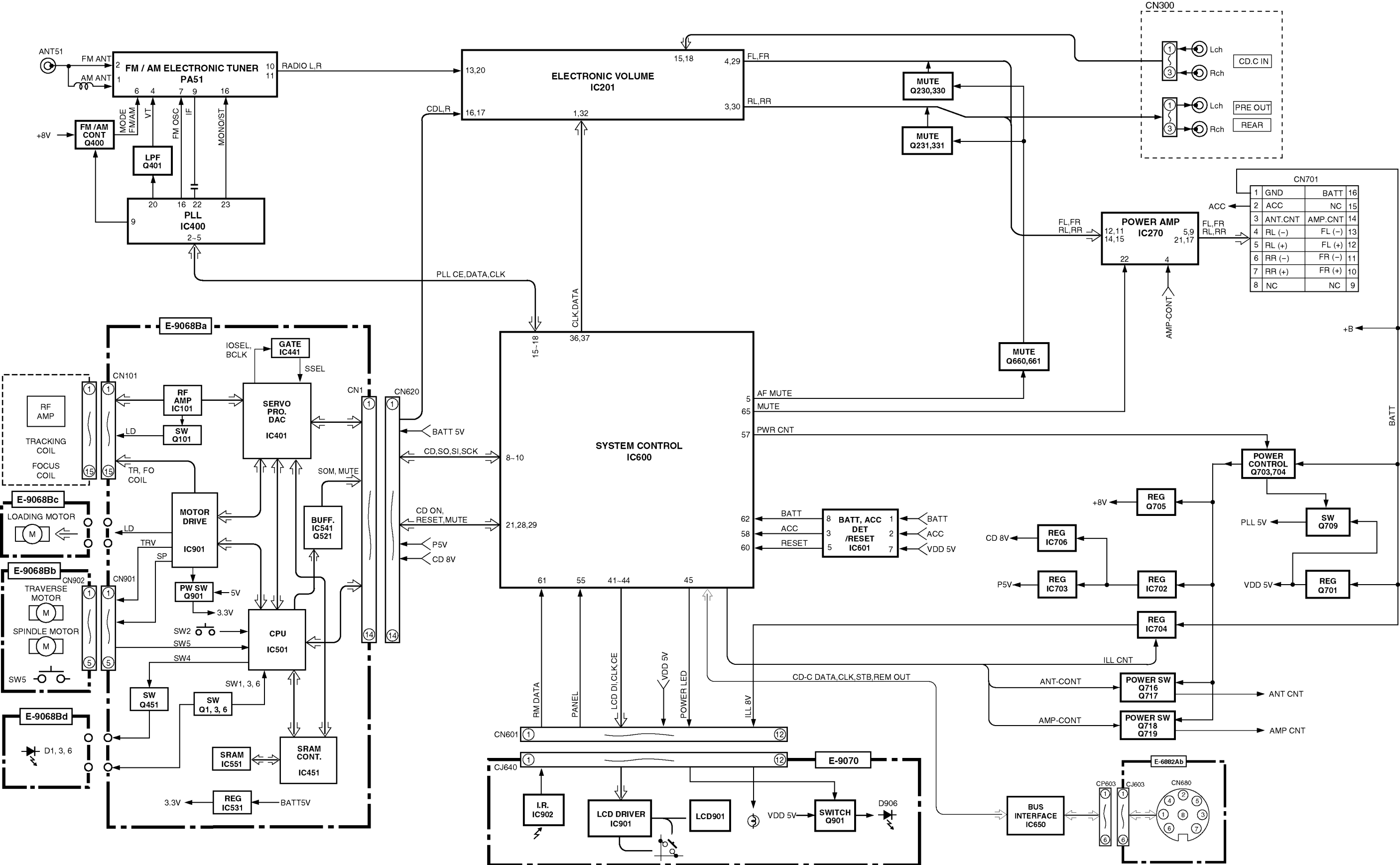
ANT51
FM ANT
AM ANT
FM / AM ELECTRONIC TUNER
PA51
RADIO L,R
MODE FM/AM
VT
FM OSC
IF
MONO/ST
+8V
FM /AM CONT Q400
LPF Q401
PLL IC400
PLL CE,DATA,CLK
ELECTRONIC VOLUME IC201
CDL,R
FL,FR
RL,RR
MUTE Q230,330
MUTE Q231,331
CN300
Lch
Rch
CD.C IN
PRE OUT
REAR
CN701
GND
ACC
ANT.CNT
RL (−)
RL (+)
RR (−)
RR (+)
NC
BATT
AMP.CNT
FL (−)
FL (+)
FR (−)
FR (+)
POWER AMP IC270
AMP-CONT
MUTE Q660,661
+B
BATT
E-9068Ba
IOSEL, BCLK
GATE IC441
SSEL
CN101
RF AMP IC101
SW Q101
LD
SERVO PRO. DAC IC401
CN1
CN620
BATT 5V
CD,SO,SI,SCK
CD ON, RESET,MUTE
P5V
CD 8V
RF AMP
TRACKING COIL
FOCUS COIL
TR, FO COIL
SOM, MUTE
E-9068Bc
LOADING MOTOR
MOTOR DRIVE IC901
BUFF. IC541 Q521
TRV
SP
E-9068Bb
TRAVERSE MOTOR
SPINDLE MOTOR
CN902
CN901
PW SW Q901
5V
3.3V
SW2
SW5
SW4
CPU IC501
SW1, 3, 6
SW Q451
SW Q1, 3, 6
E-9068Bd
D1, 3, 6
SRAM IC551
SRAM CONT. IC451
REG IC531
BATT5V
CLK,DATA
SYSTEM CONTROL IC600
AF MUTE
MUTE
PWR CNT
BATT, ACC DET /RESET IC601
RESET
VDD 5V
POWER CONTROL Q703,704
REG Q705
REG IC706
REG IC703
REG IC702
REG IC704
REG Q701
SW Q709
PLL 5V
ILL CNT
CD-C DATA,CLK,STB,REM OUT
POWER SW Q716 Q717
POWER SW Q718 Q719
ANT CNT
AMP CNT
RM DATA
PANEL
LCD DI,CLK,CE
POWER LED
ILL 8V
CN601
CJ640
E-9070
I.R. IC902
LCD DRIVER IC901
LCD901
SWITCH Q901
D906
BUS INTERFACE IC650
E-6882Ab
CP603
CJ603
CN680

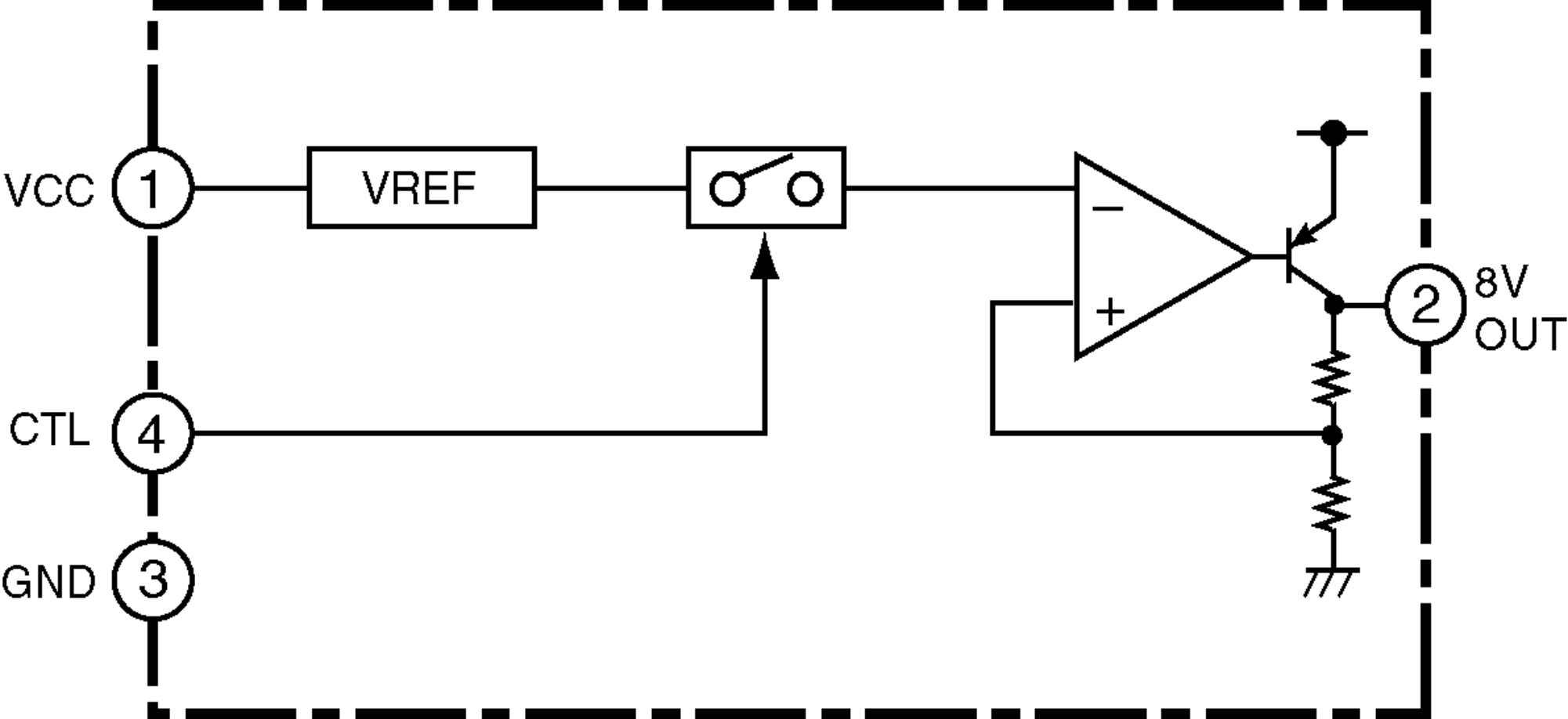
VCC
1
VREF
CTL
4
GND
3
2
8V
OUT

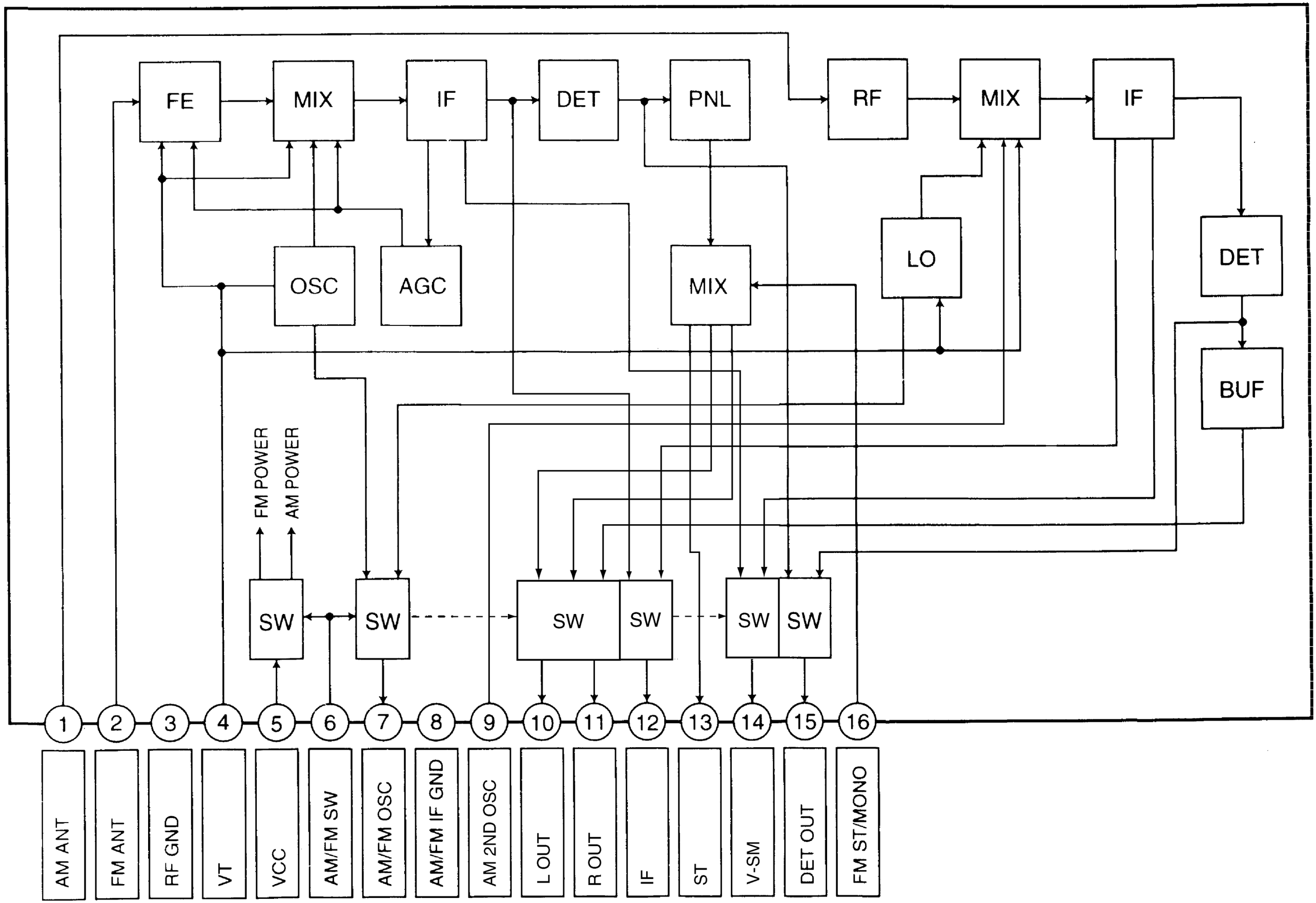
FE
MIX
IF
DET
PNL
RF
MIX
IF
OSC
AGC
MIX
LO
DET
BUF
FM POWER
AM POWER
SW
SW
SW
SW
SW
SW
1
2
3
4
5
6
7
8
9
10
11
12
13
14
15
16
AM ANT
FM ANT
RF GND
VT
VCC
AM/FM SW
AM/FM OSC
AM/FM IF GND
AM 2ND OSC
L OUT
R OUT
IF
ST
V-SM
DET OUT
FM ST/MONO

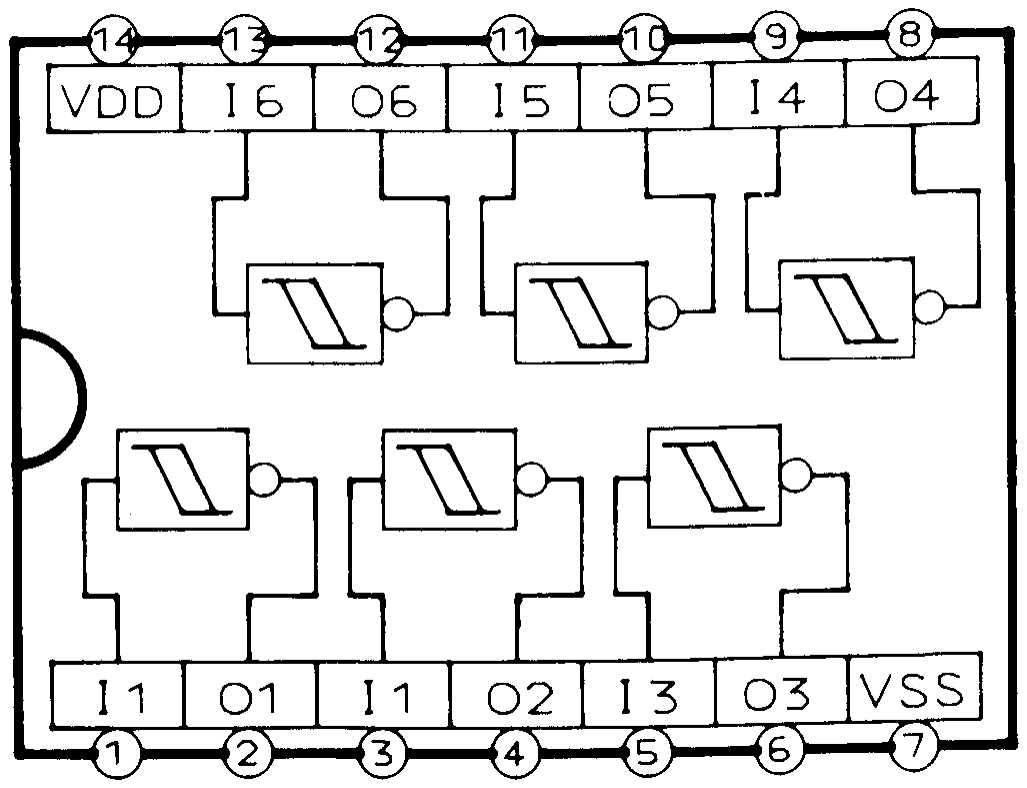
14
13
12
11
10
9
8
VDD
I6
O6
I5
O5
I4
O4
I1
O1
I1
O2
I3
O3
VSS
1
2
3
4
5
6
7

17.2. CD Servo Block

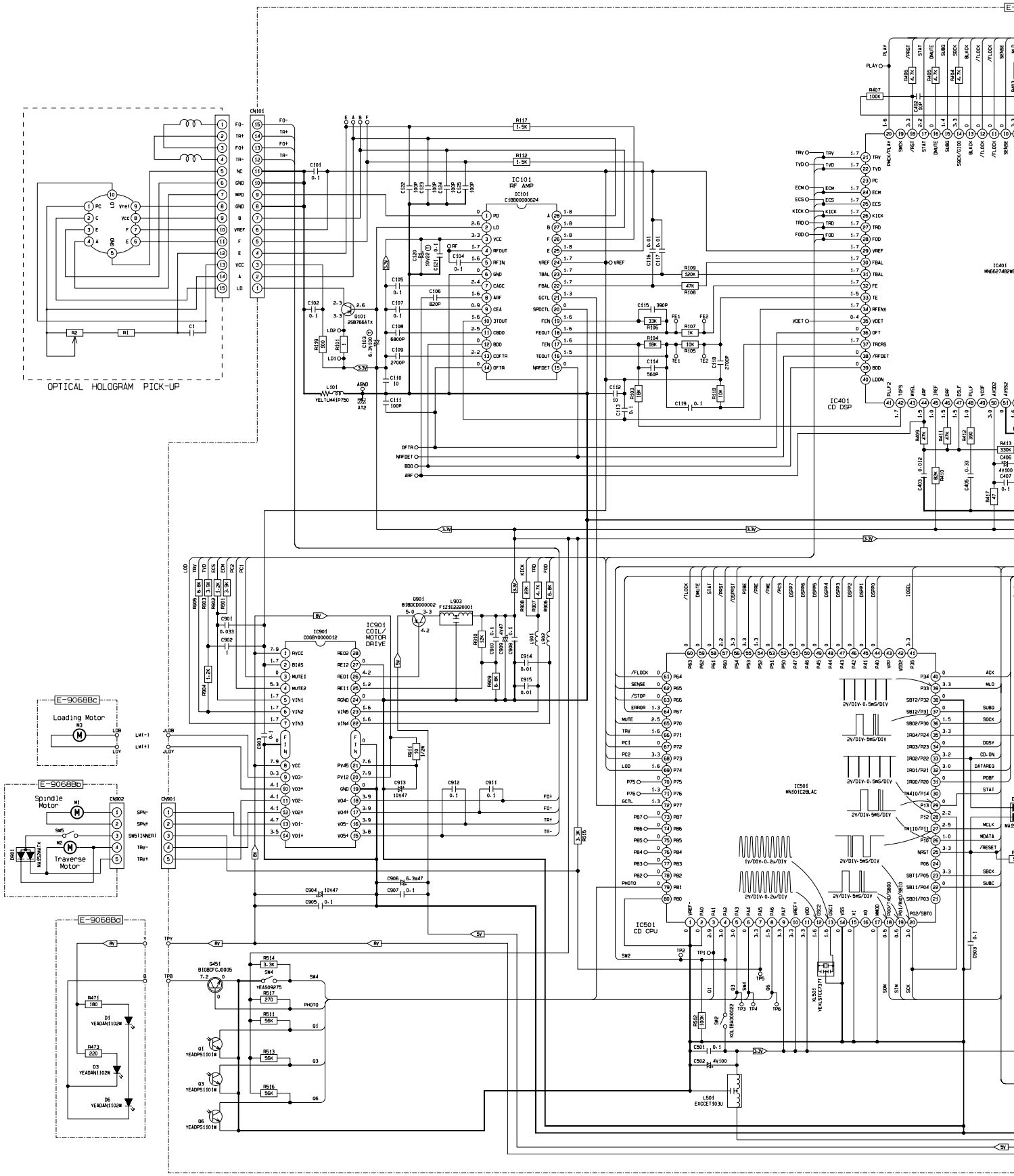

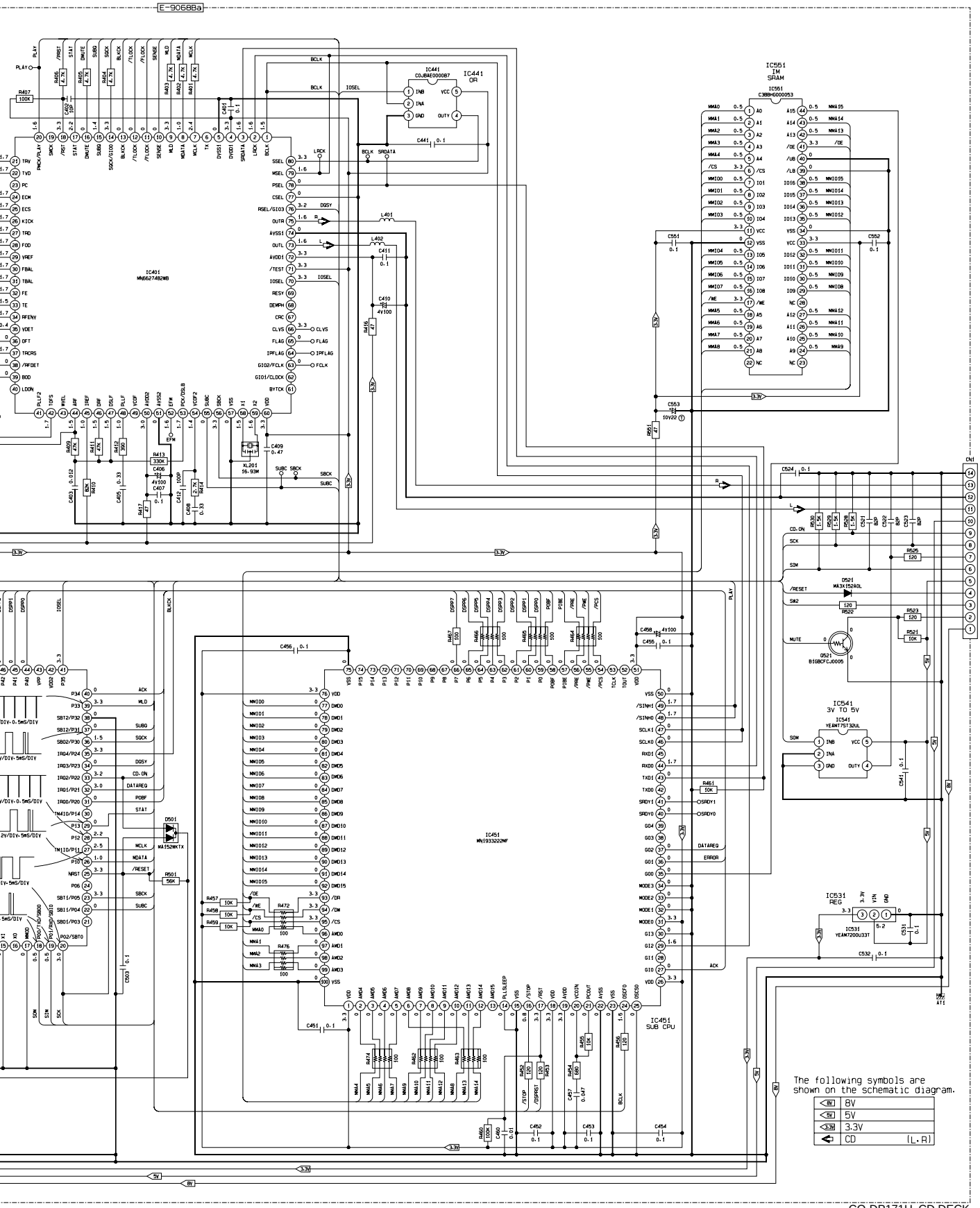

CQ-DP171U, CD DECK

Printed in Japan (K) 2001.8 (Recycled Paper)

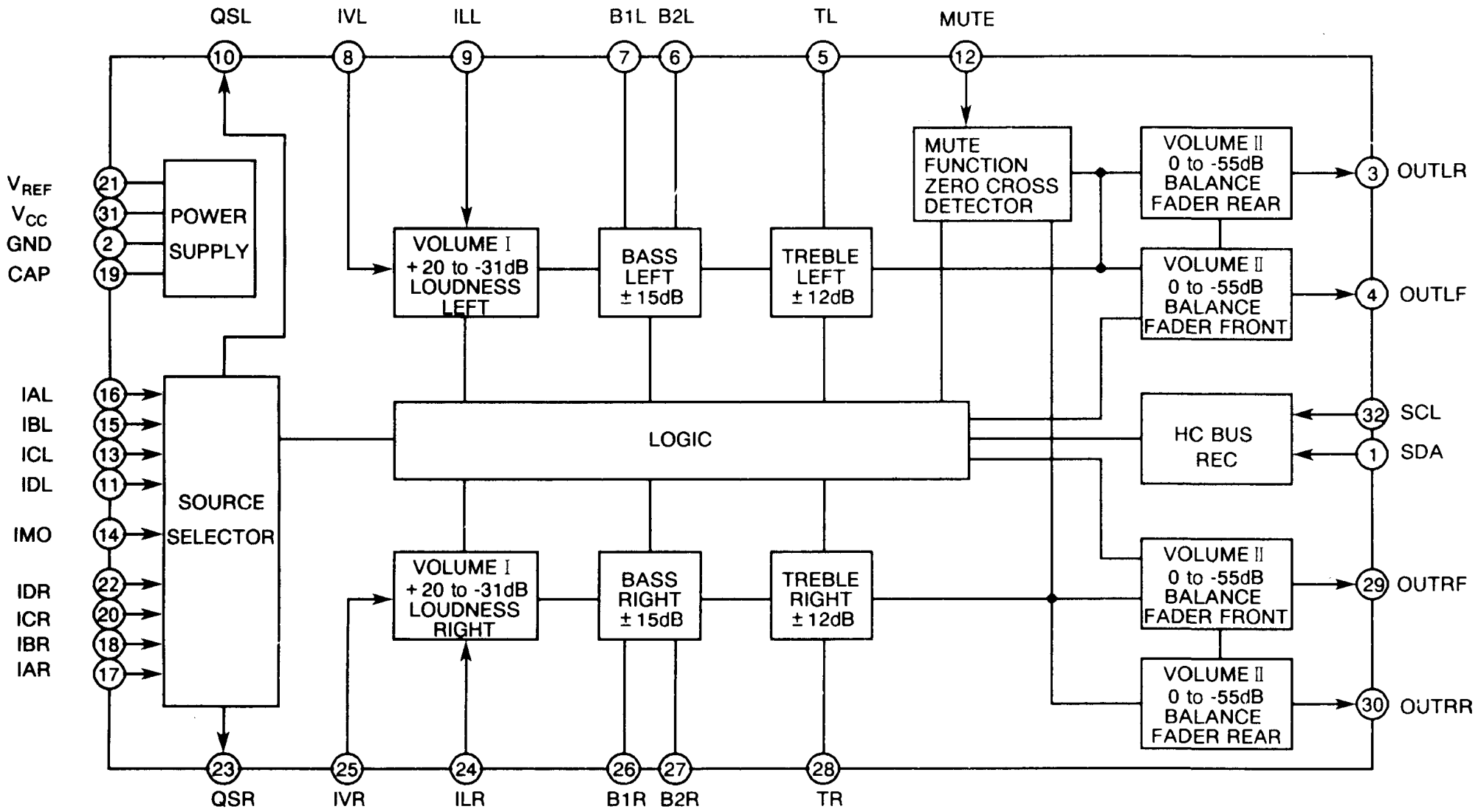
QSL
IVL
ILL
B1L
B2L
TL
MUTE
10
8
9
7
6
5
12
MUTE FUNCTION ZERO CROSS DETECTOR
VOLUME II 0 to -55dB BALANCE FADER REAR
3
OUTLR
VREF
VCC
GND
CAP
21
31
2
19
POWER SUPPLY
VOLUME I +20 to -31dB LOUDNESS LEFT
BASS LEFT ±15dB
TREBLE LEFT ±12dB
VOLUME II 0 to -55dB BALANCE FADER FRONT
4
OUTLF
IAL
IBL
ICL
IDL
IMO
IDR
ICR
IBR
IAR
16
15
13
11
14
22
20
18
17
SOURCE SELECTOR
LOGIC
HC BUS REC
32
SCL
1
SDA
VOLUME I +20 to -31dB LOUDNESS RIGHT
BASS RIGHT ±15dB
TREBLE RIGHT ±12dB
VOLUME II 0 to -55dB BALANCE FADER FRONT
29
OUTRF
VOLUME II 0 to -55dB BALANCE FADER REAR
30
OUTRR
23
25
24
26
27
28
QSR
IVR
ILR
B1R
B2R
TR

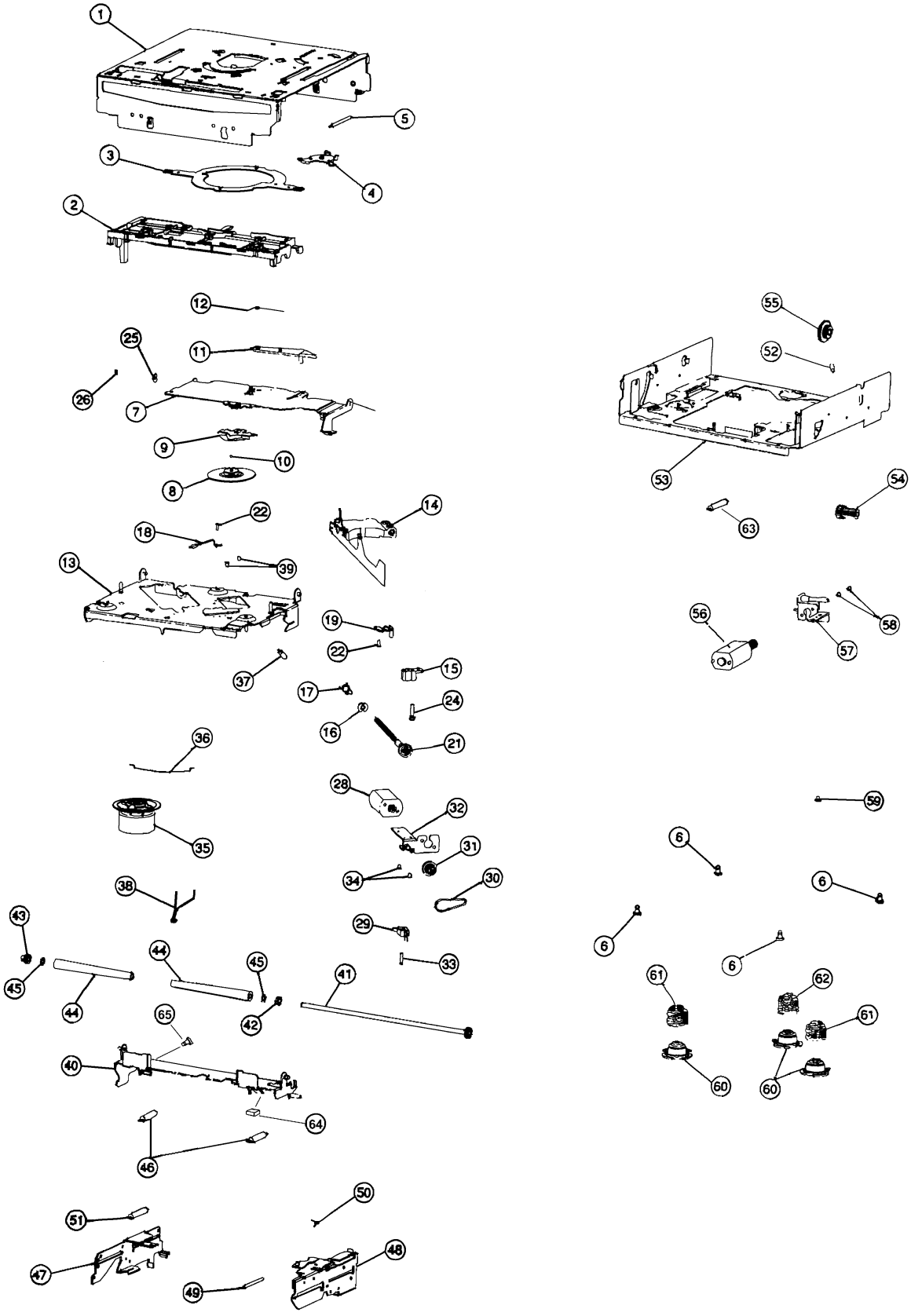

NCD8-12CM
'01.8.8

A B C

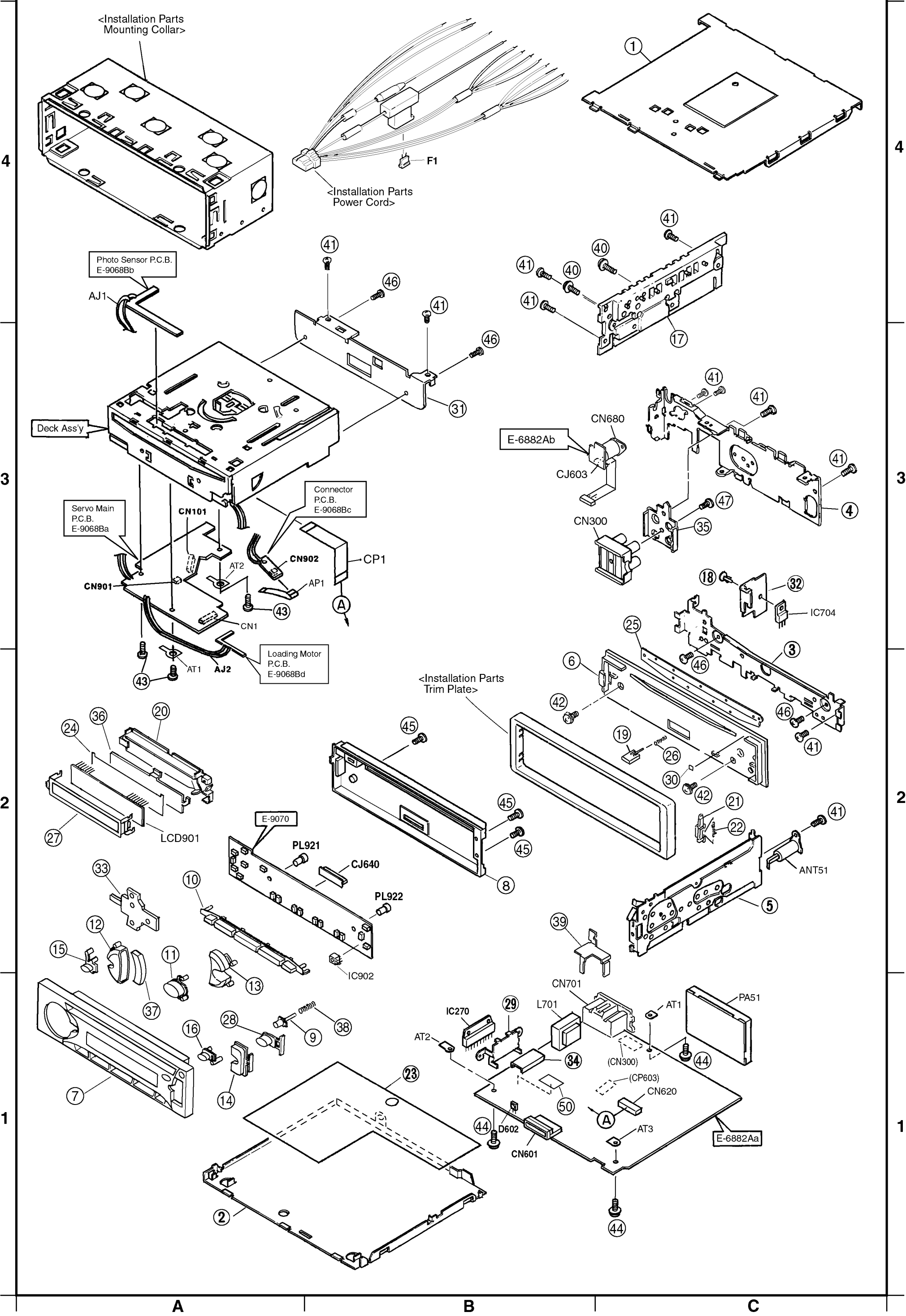
<Installation Parts Mounting Collar>
<Installation Parts Power Cord>
F1
Photo Sensor P.C.B. E-9068Bb
AJ1
Deck Ass'y
Servo Main P.C.B. E-9068Ba
CN101
CN901
AT2
CN902
AP1
CP1
CN1
AT1
AJ2
Connector P.C.B. E-9068Bc
Loading Motor P.C.B. E-9068Bd
CN680
E-6882Ab
CJ603
CN300
<Installation Parts Trim Plate>
LCD901
E-9070
PL921
CJ640
PL922
IC902
IC704
ANT51
CN701
L701
IC270
PA51
(CN300)
(CP603)
CN620
D602
CN601
AT3
E-6882Aa

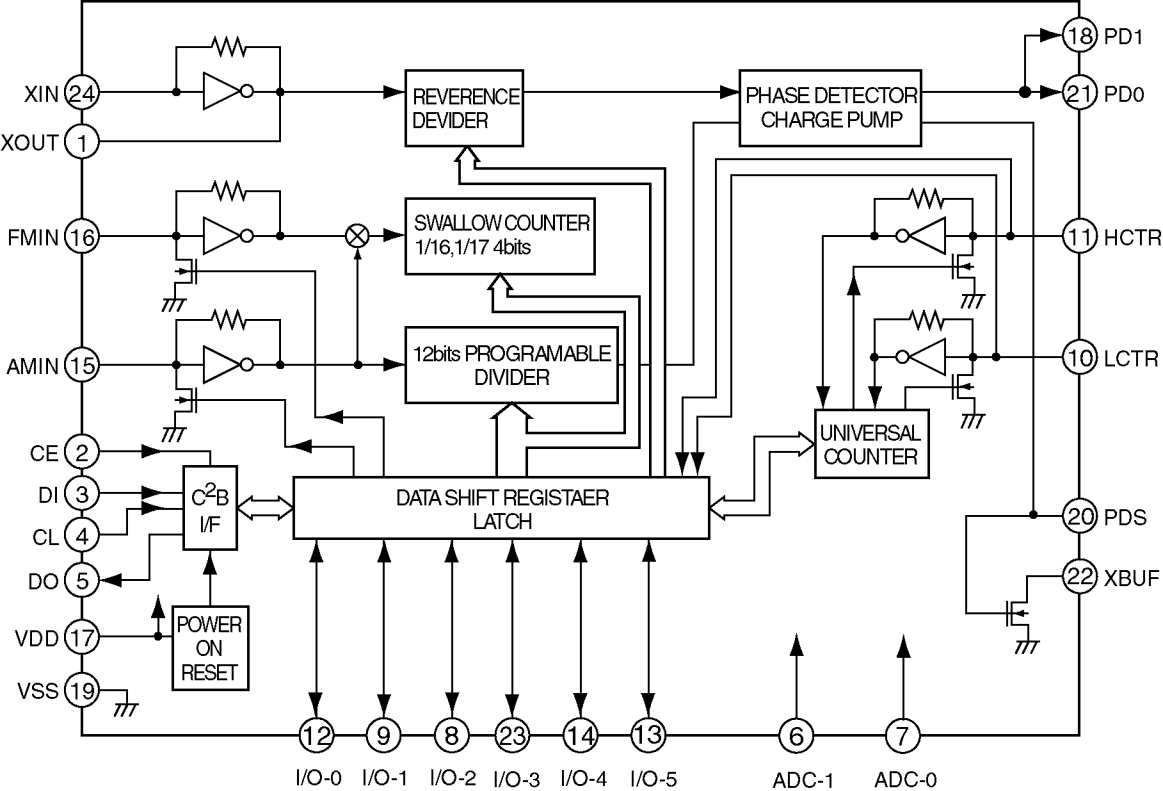
XIN 24
XOUT 1
FMIN 16
AMIN 15
CE 2
DI 3
CL 4
DO 5
VDD 17
VSS 19
REVERENCE DEVIDER
PHASE DETECTOR CHARGE PUMP
SWALLOW COUNTER 1/16,1/17 4bits
12bits PROGRAMABLE DIVIDER
UNIVERSAL COUNTER
C2B I/F
DATA SHIFT REGISTAER LATCH
POWER ON RESET
18 PD1
21 PD0
11 HCTR
10 LCTR
20 PDS
22 XBUF
12 I/O-0
9 I/O-1
8 I/O-2
23 I/O-3
14 I/O-4
13 I/O-5
6 ADC-1
7 ADC-0

17 SCHEMATIC DIAGRAM -2

17.1. Main Block

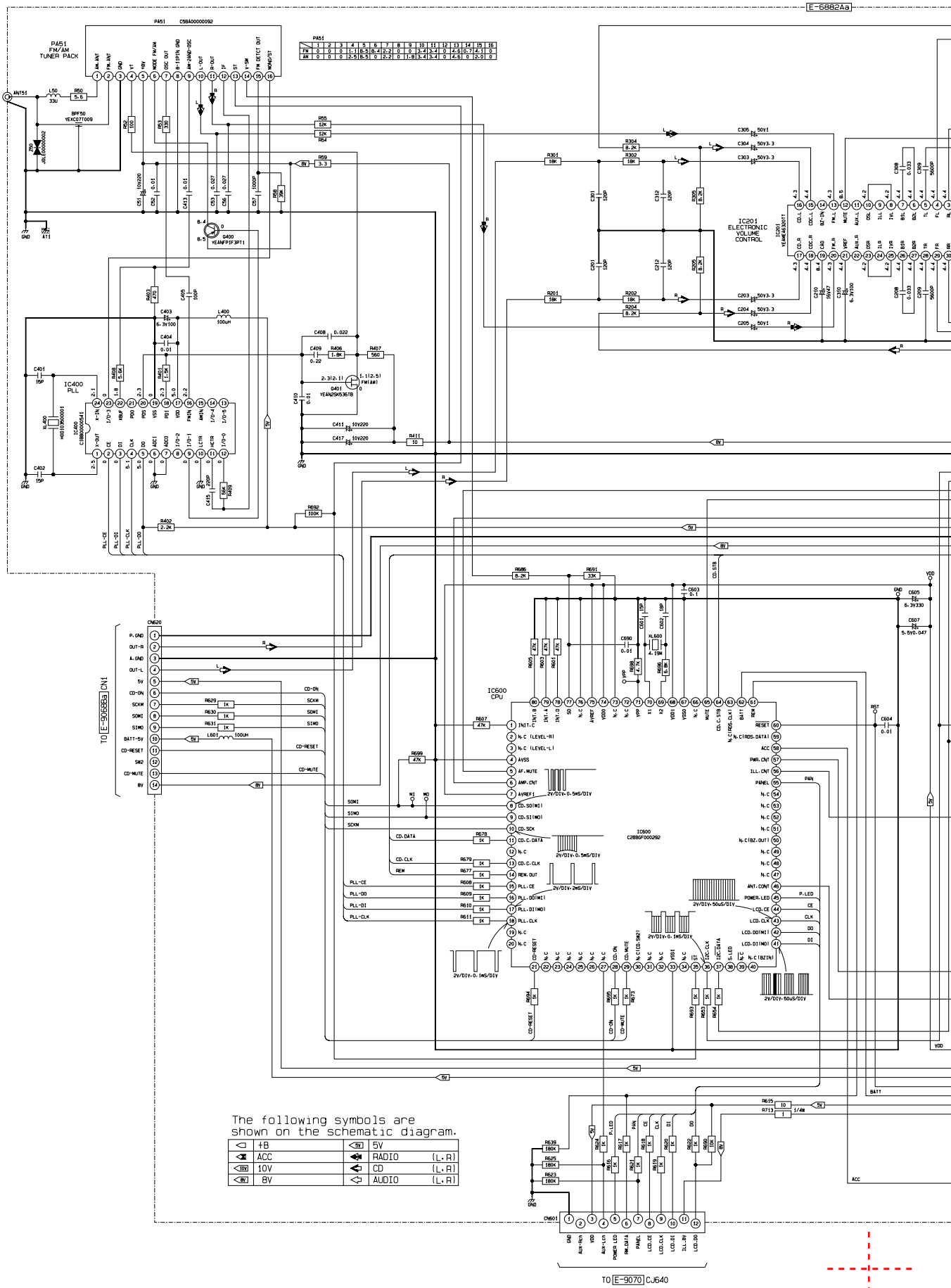

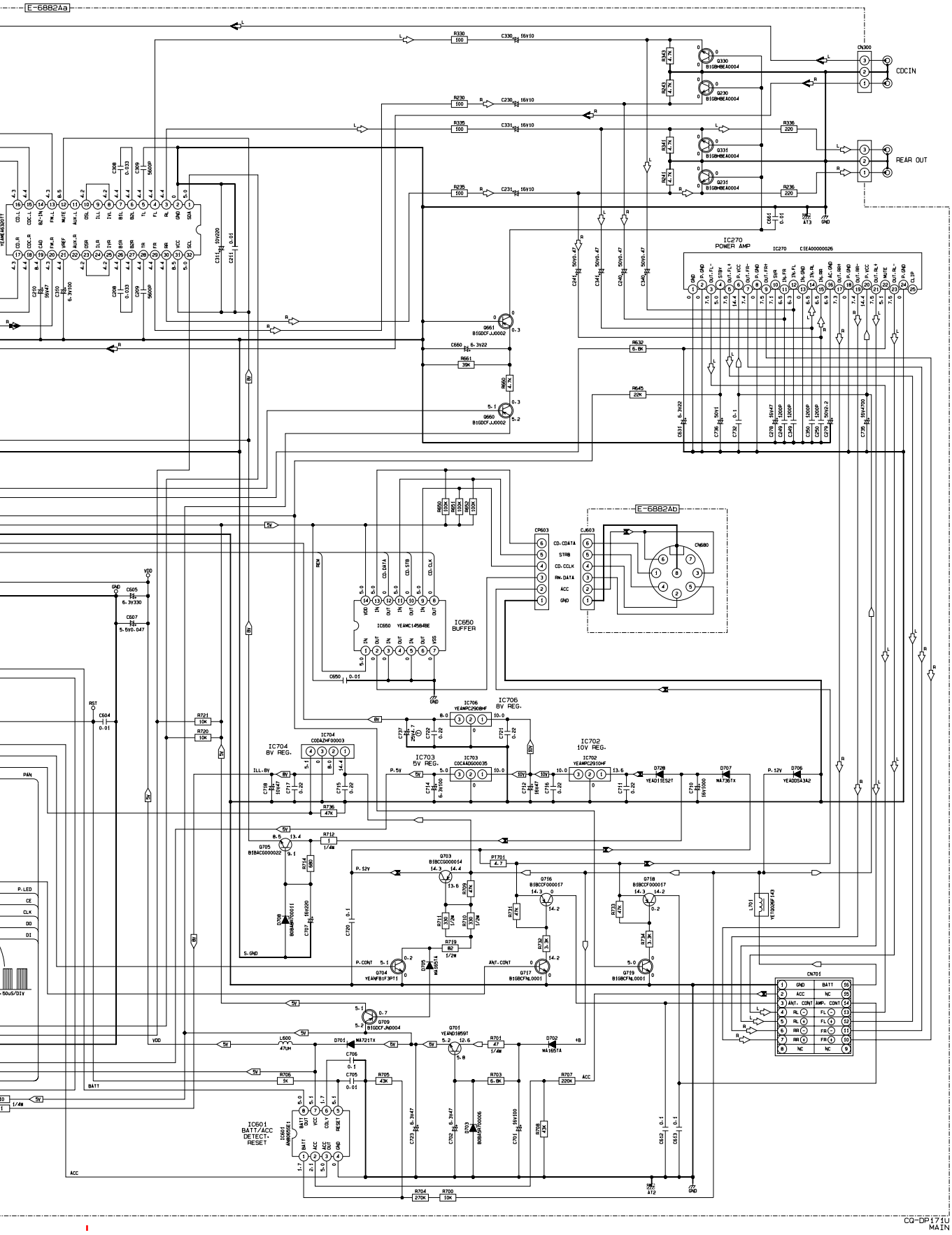
E-6882Aa
CDCIN
REAR OUT
IC270
POWER AMP
E-6882Ab
IC650
BUFFER
IC704
8V REG.
IC703
5V REG.
IC706
8V REG.
IC705
IC702
10V REG.
IC601
BATT/ACC
DETECT-
RESET
CN701
CQ-DP171U
MAIN

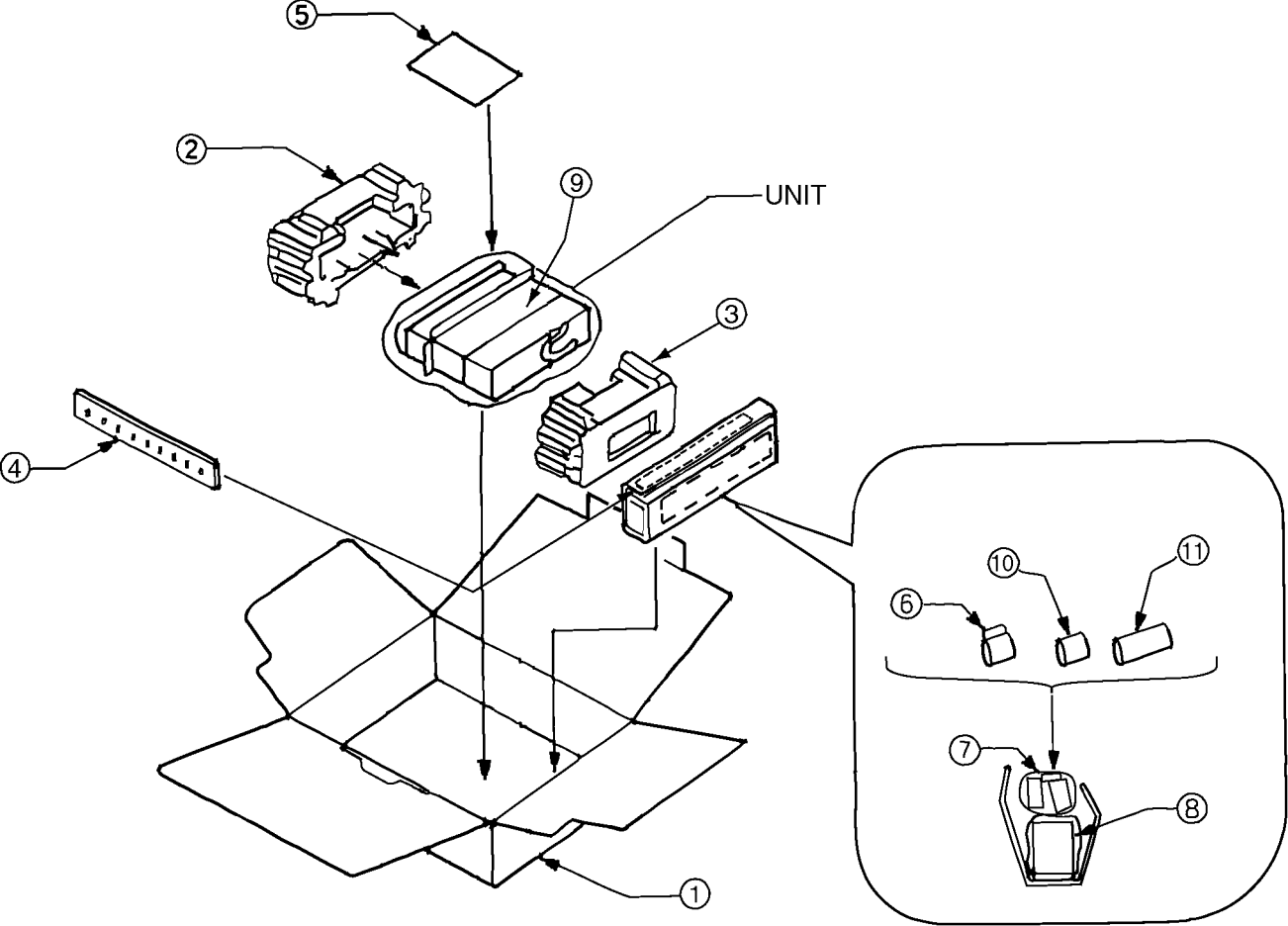
5
2
9
UNIT
3
4
10
11
6
7
8
1

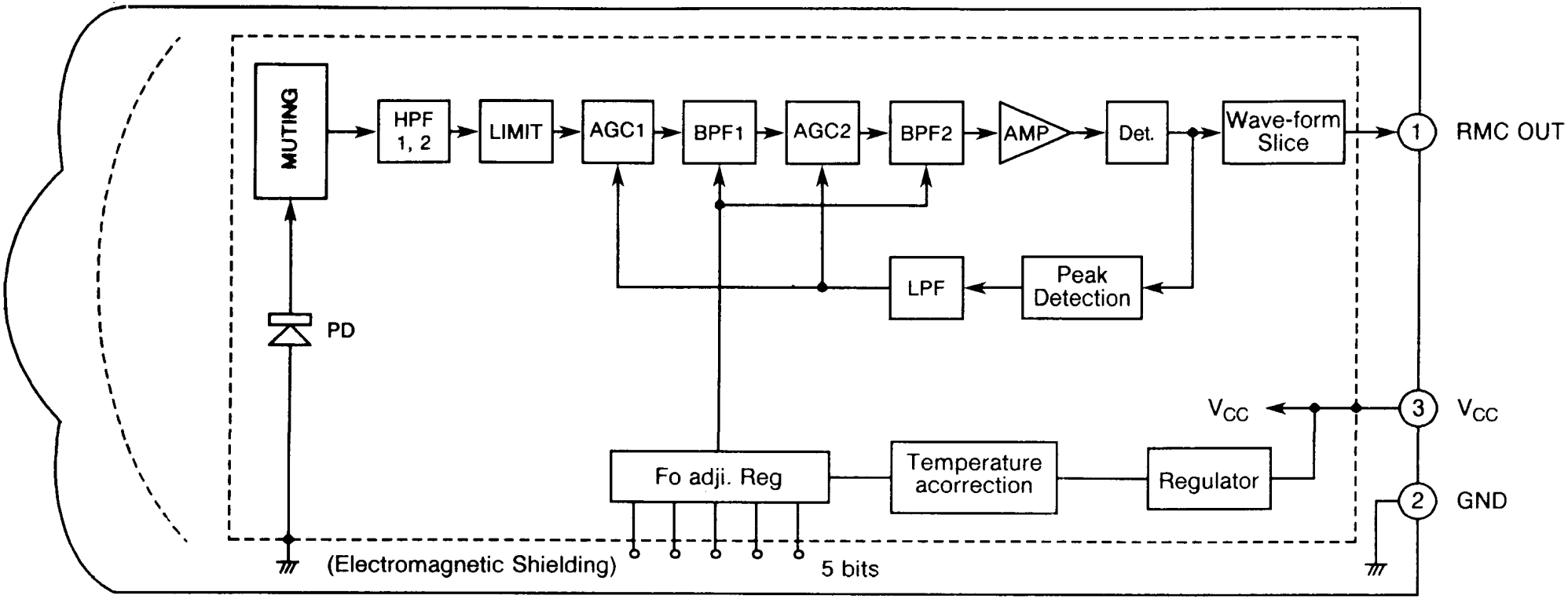
MUTING
HPF 1, 2
LIMIT
AGC1
BPF1
AGC2
BPF2
AMP
Det.
Wave-form Slice
1
RMC OUT
LPF
Peak Detection
PD
VCC
3
VCC
Fo adji. Reg
Temperature acorrection
Regulator
2
GND
(Electromagnetic Shielding)
5 bits

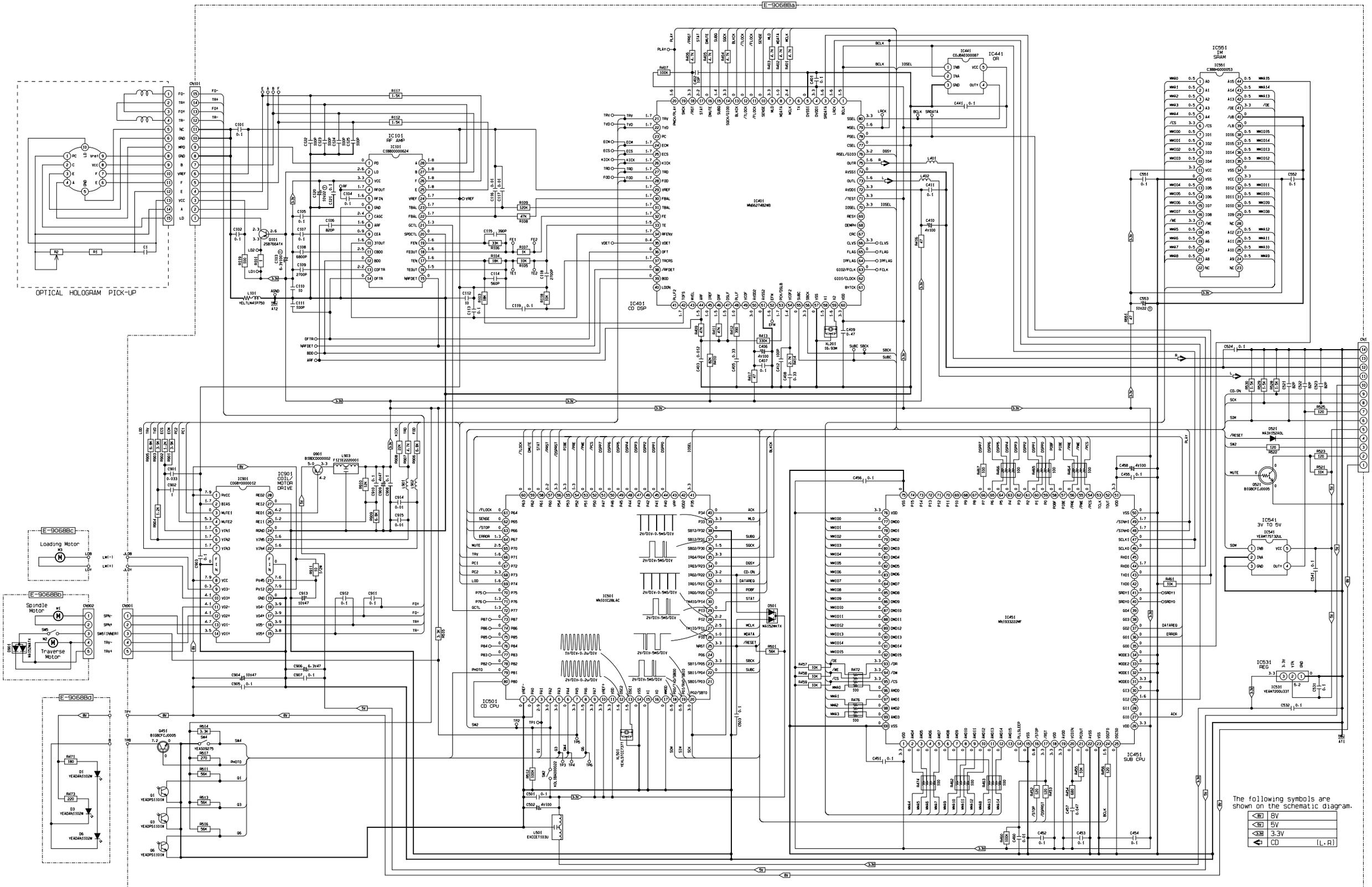

Printed in Japan (K) 2001.8 (Recycled Paper)

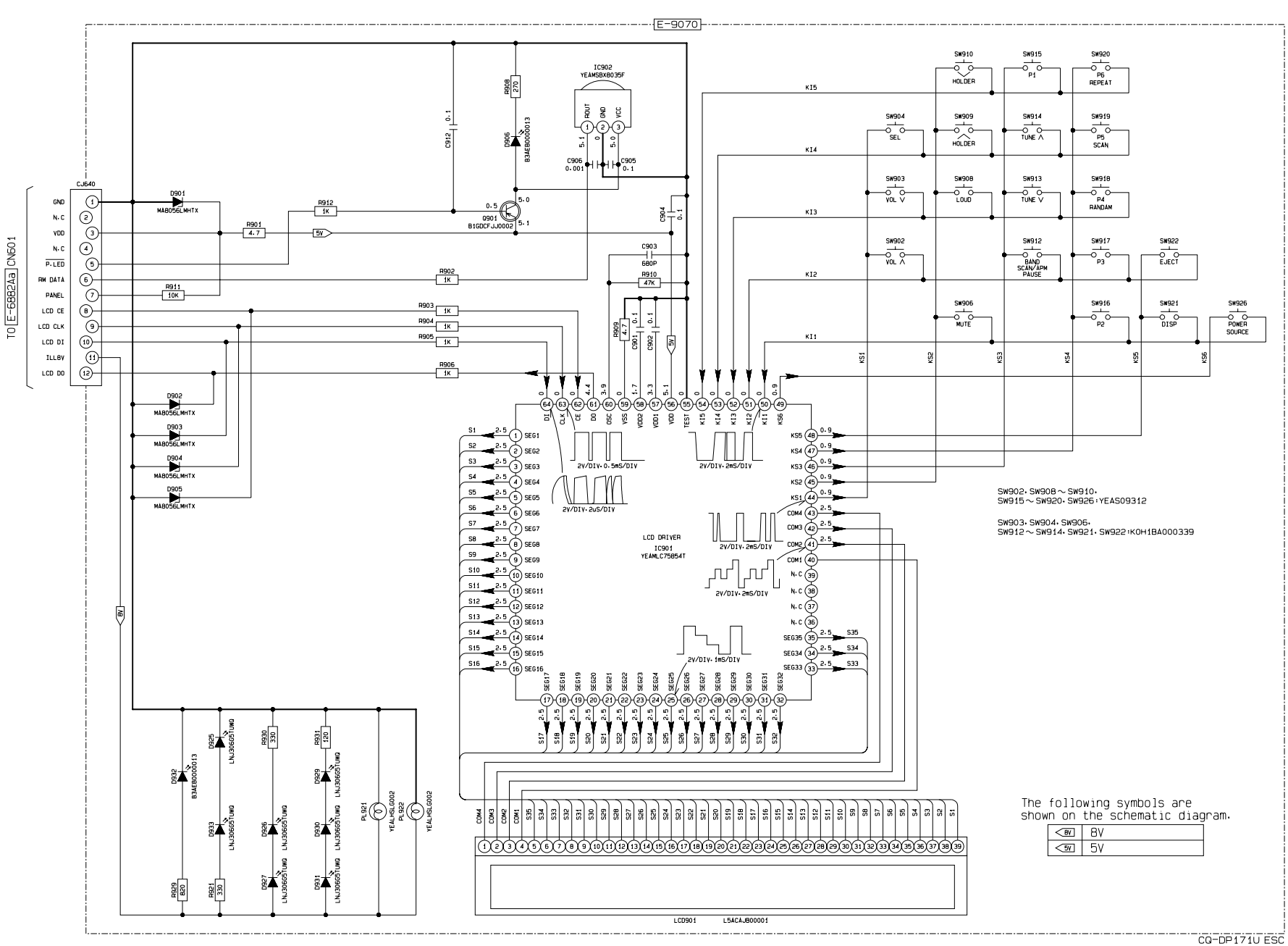
E-9070
TO E-6882Aa CN601
CJ640
GND
N.C
VDD
N.C
P.LED
RM DATA
PANEL
LCD CE
LCD CLK
LCD DI
ILL8V
LCD DO
IC902
YEAMSBXB035F
ROUT
GND
VCC
Q901
B1GDCFJJ0002
D901
MAB056LMHTX
D902
MAB056LMHTX
D903
MAB056LMHTX
D904
MAB056LMHTX
D905
MAB056LMHTX
D906
B3AEB0000013
D932
B3AEB0000013
D925
LNJ306G5TUWQ
D933
LNJ306G5TUWQ
D926
LNJ306G5TUWQ
D927
LNJ306G5TUWQ
D930
LNJ306G5TUWQ
D931
LNJ306G5TUWQ
D929
LNJ306G5TUWQ
PL921
YEALH5LG002
PL922
YEALH5LG002
LCD DRIVER
IC901
YEAMLC75854T
LCD901
L5ACAJ800001
SW910 HOLDER
SW915 P1
SW920 P6 REPEAT
SW904 SEL
SW909 HOLDER
SW914 TUNE Λ
SW919 P5 SCAN
SW903 VOL V
SW908 LOUD
SW913 TUNE V
SW918 P4 RANDAM
SW902 VOL Λ
SW912 BAND SCAN/APM PAUSE
SW917 P3
SW922 EJECT
SW906 MUTE
SW916 P2
SW921 DISP
SW926 POWER SOURCE
SW902・SW908～SW910・
SW915～SW920・SW926:YEAS09312
SW903・SW904・SW906・
SW912～SW914・SW921・SW922:KOH1BA000339
The following symbols are shown on the schematic diagram.
8V
5V

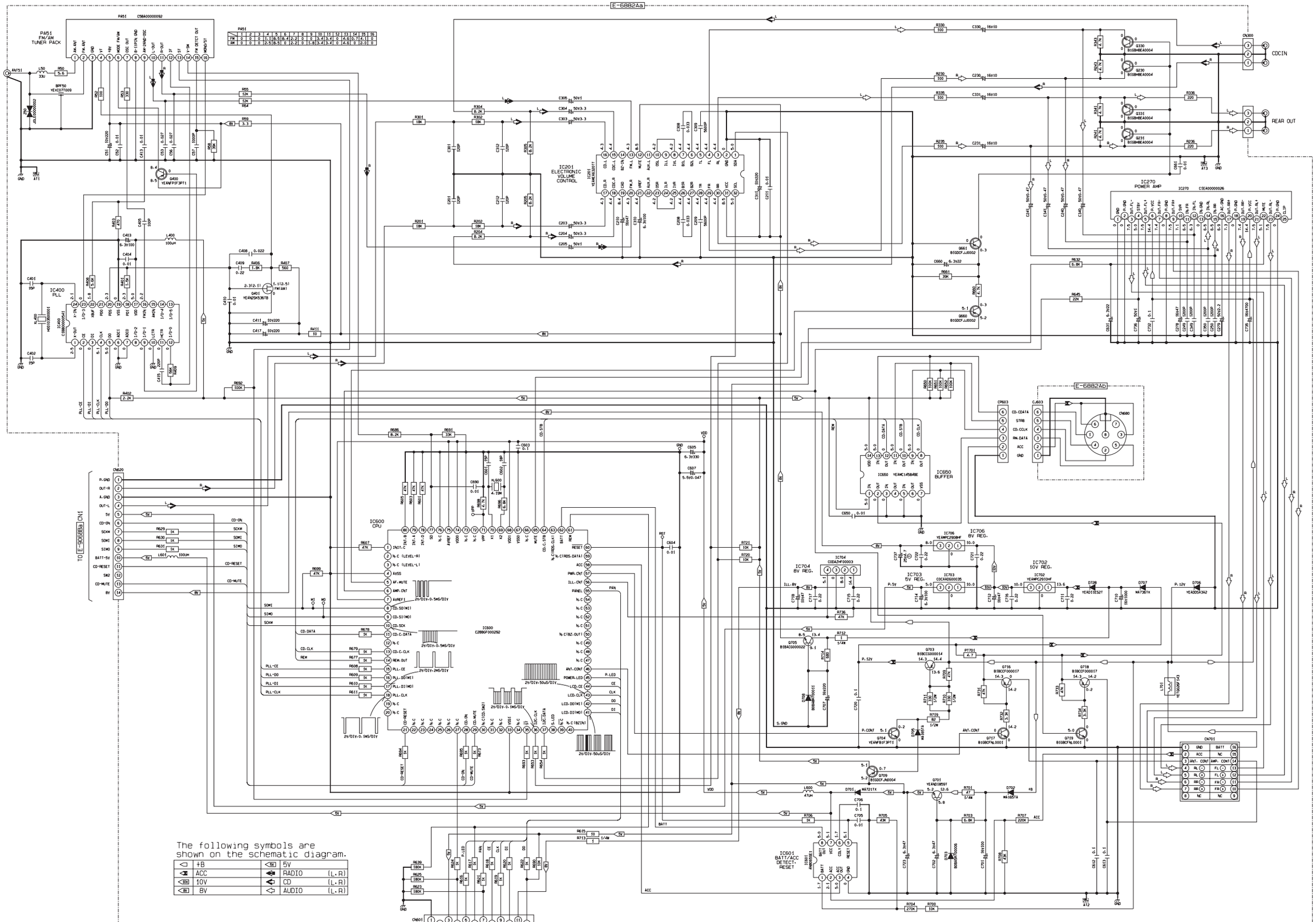

CQ-DP171U
MAIN

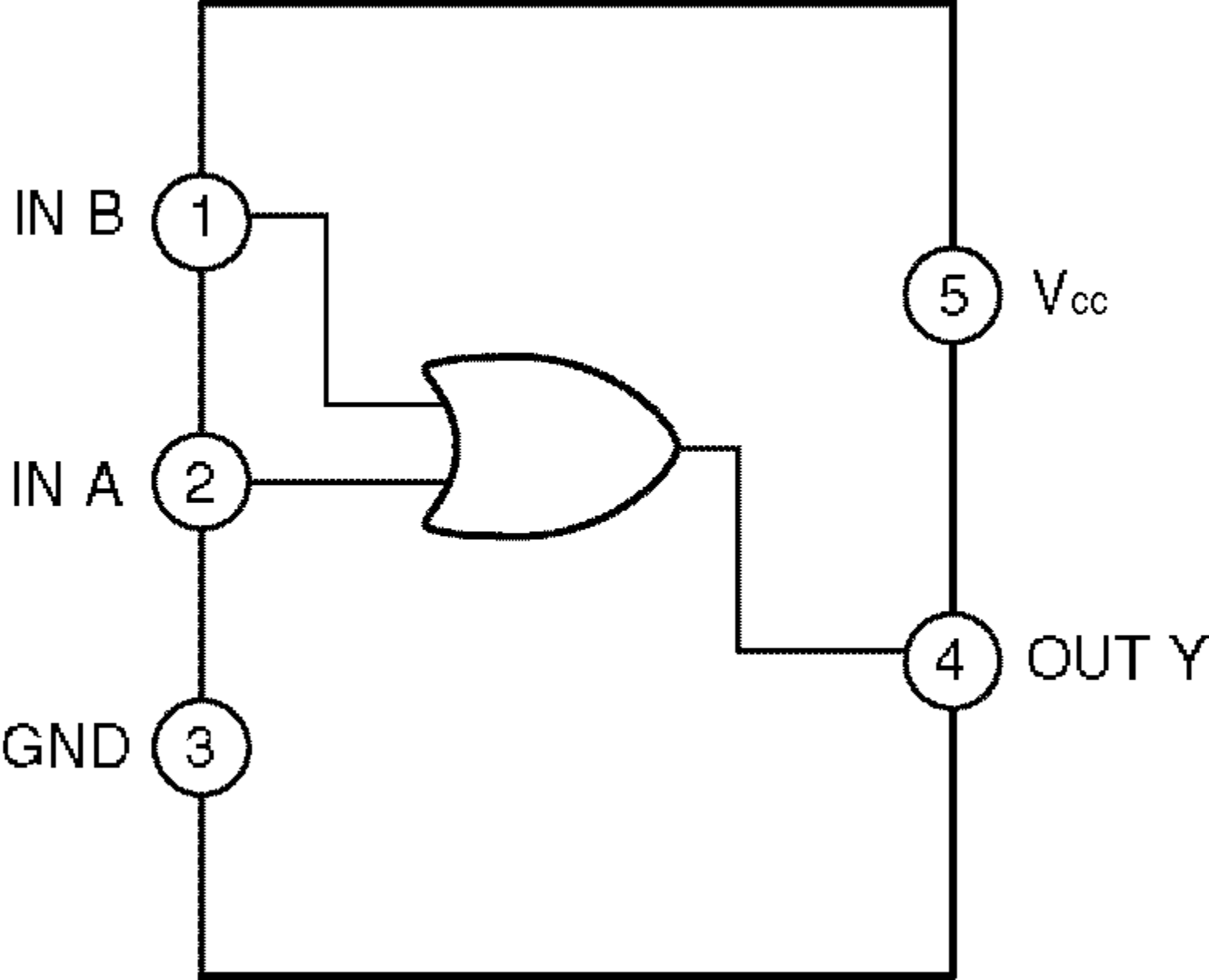
IN B
1
IN A
2
GND
3
5
Vcc
4
OUT Y

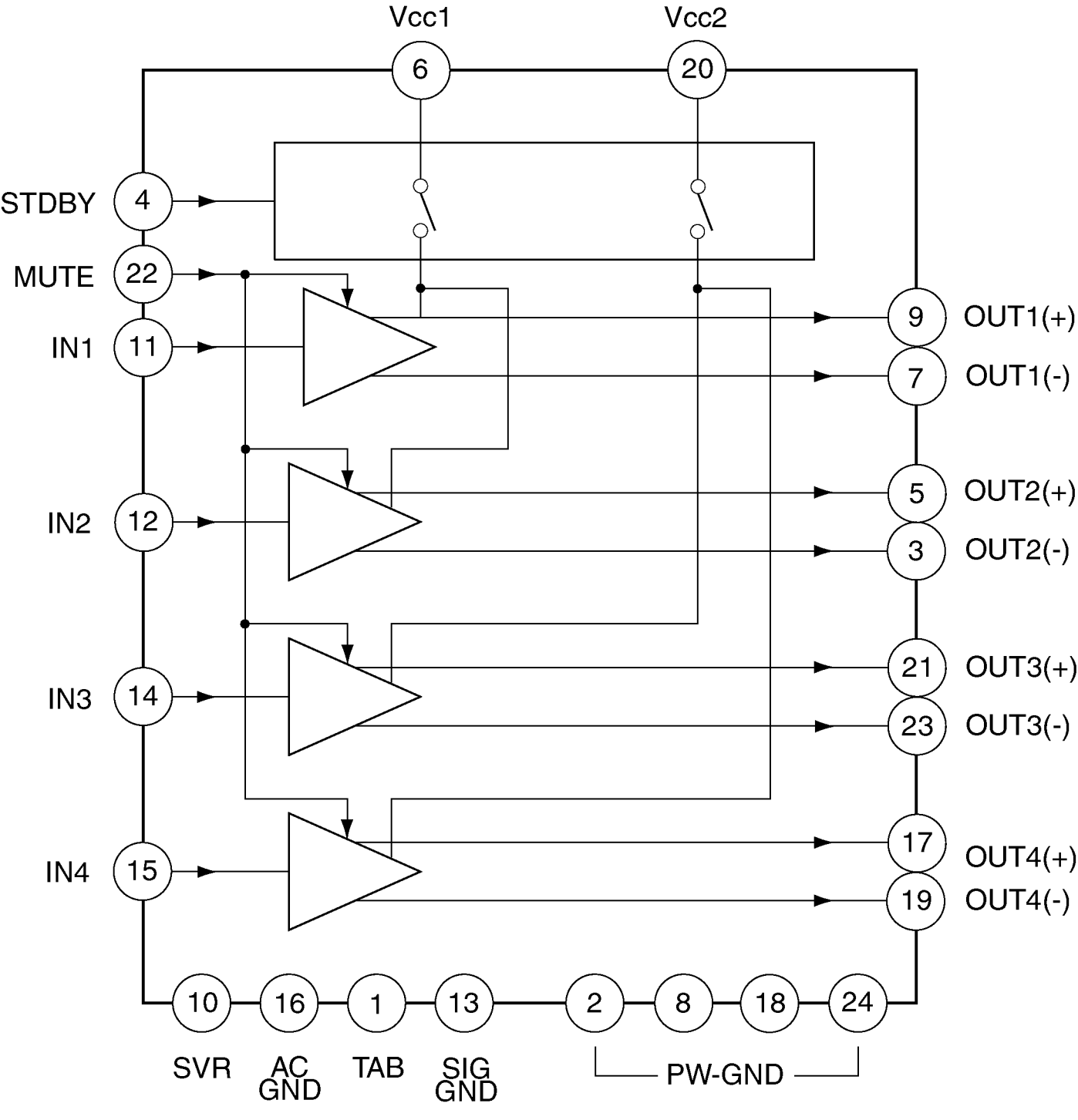
Vcc1
Vcc2
6
20
STDBY
4
MUTE
22
IN1
11
IN2
12
IN3
14
IN4
15
9
OUT1(+)
7
OUT1(-)
5
OUT2(+)
3
OUT2(-)
21
OUT3(+)
23
OUT3(-)
17
OUT4(+)
19
OUT4(-)
10
16
1
13
2
8
18
24
SVR
AC GND
TAB
SIG GND
PW-GND

[E-9068Bd][Bottom View]

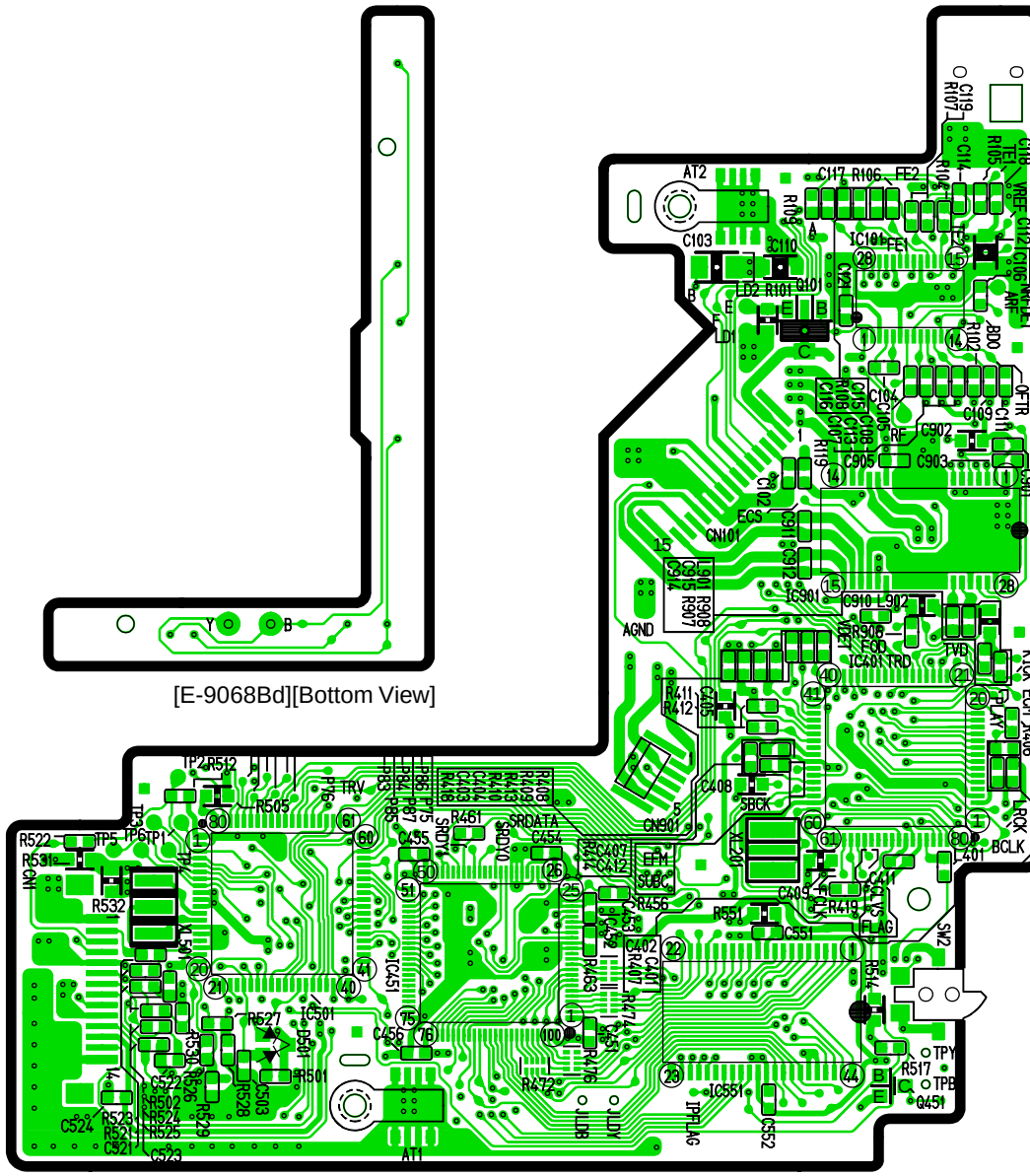

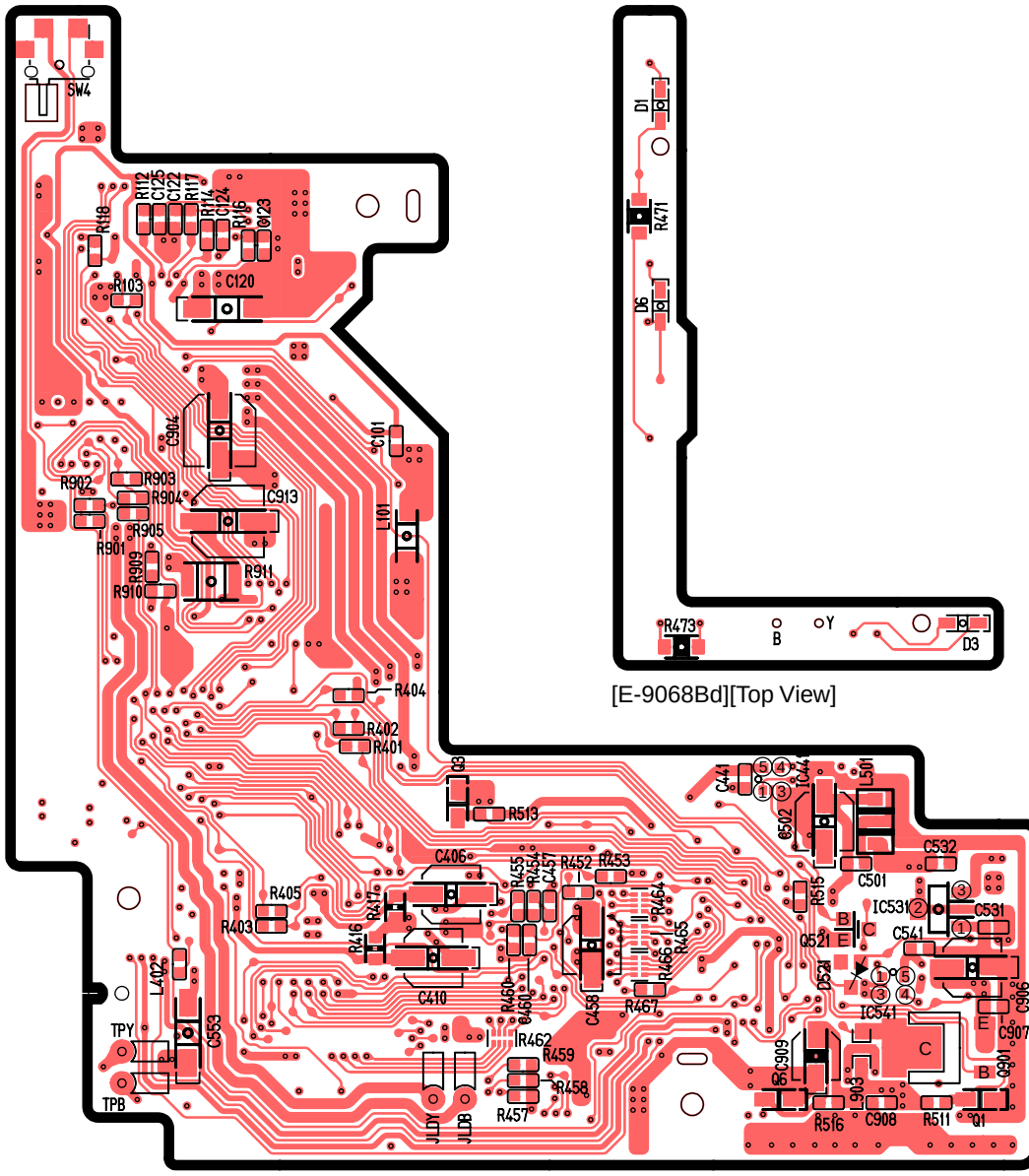

[E-9068Ba][Top View]

[E-9068Bd][Top View]

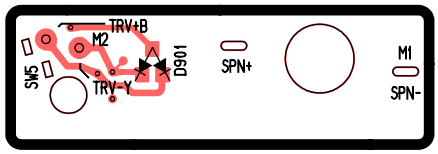

[E-9068Bb][Top View]

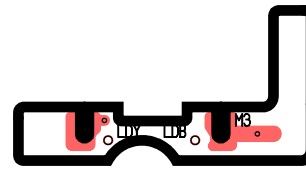

[E-9068Bc][Top View]

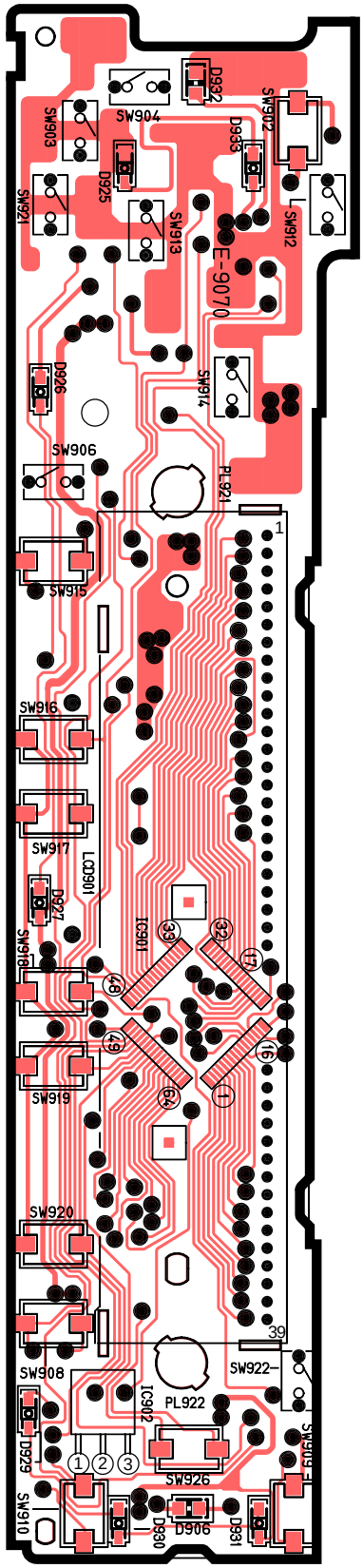

[E-9070][Top View]

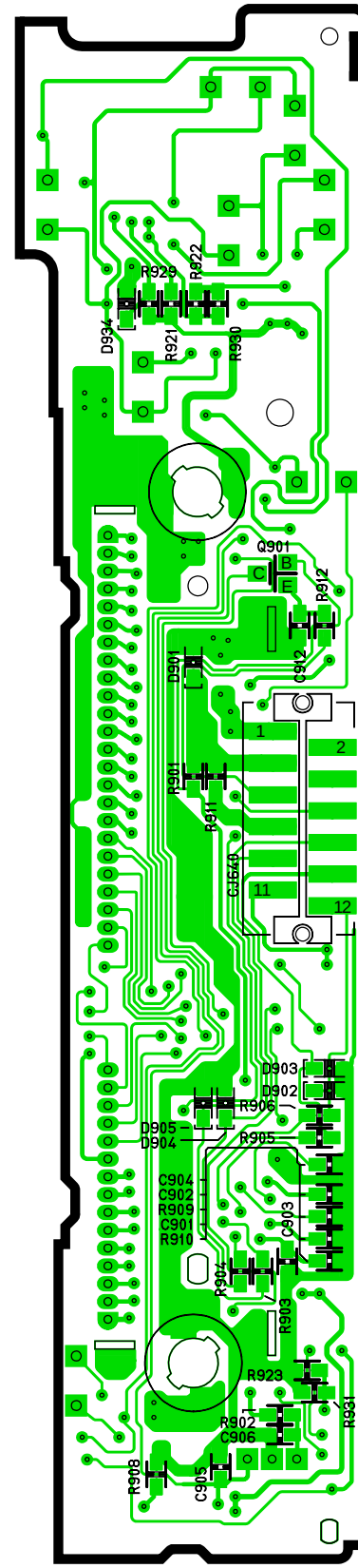

[E-9070][Bottom View]

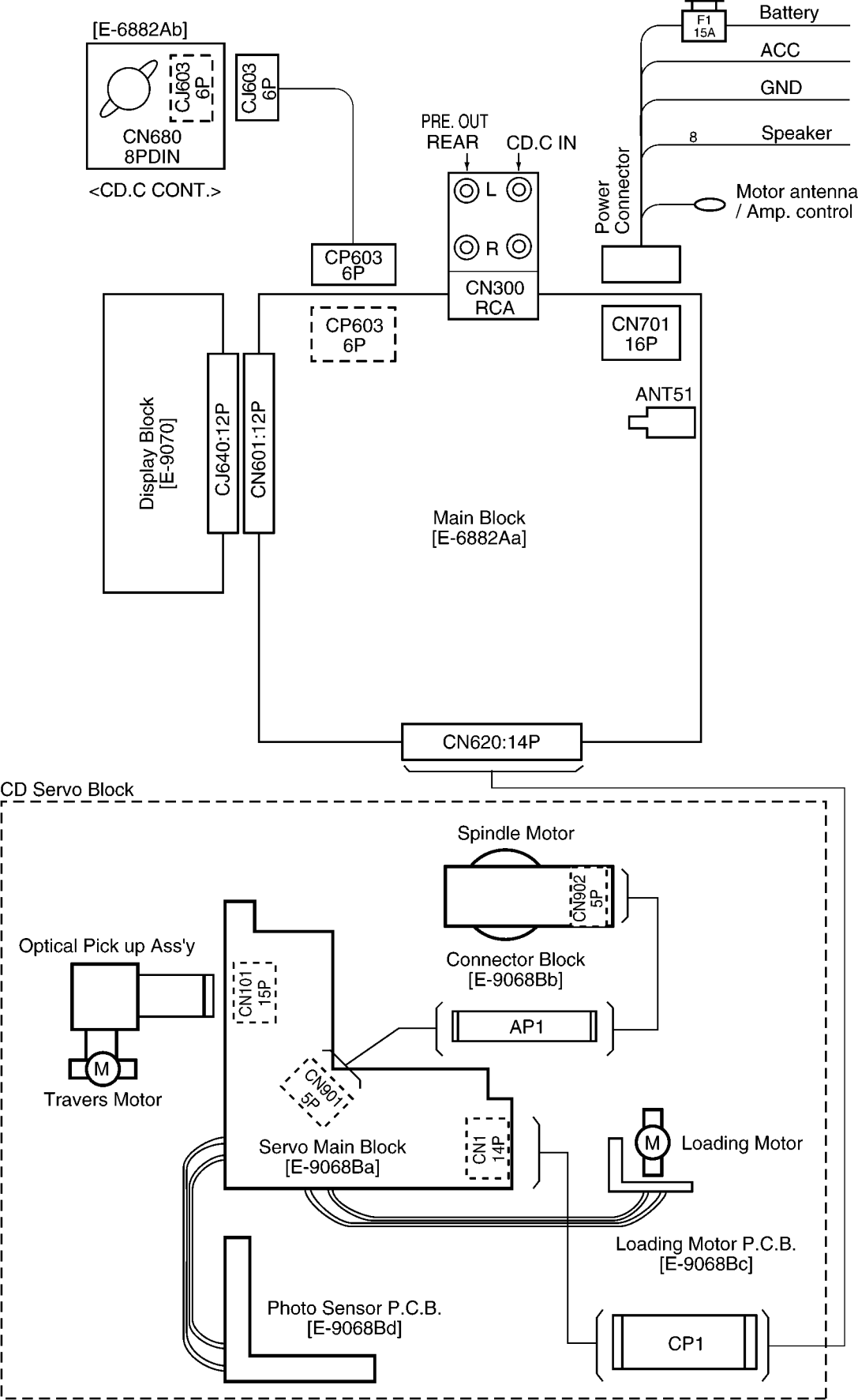
[E-6882Ab]
CJ603
6P
CN680
8PDIN
<CD.C CONT.>
CJ603
6P
PRE. OUT
REAR
CD.C IN
L
R
CN300
RCA
F1
15A
Battery
ACC
GND
8
Speaker
Power
Connector
Motor antenna
/ Amp. control
CP603
6P
CP603
6P
CN701
16P
ANT51
Display Block
[E-9070]
CJ640:12P
CN601:12P
Main Block
[E-6882Aa]
CN620:14P
CD Servo Block
Spindle Motor
CN902
5P
Connector Block
[E-9068Bb]
Optical Pick up Ass'y
CN101
15P
AP1
M
Travers Motor
CN901
5P
Servo Main Block
[E-9068Ba]
CN1
14P
M
Loading Motor
Loading Motor P.C.B.
[E-9068Bc]
Photo Sensor P.C.B.
[E-9068Bd]
CP1

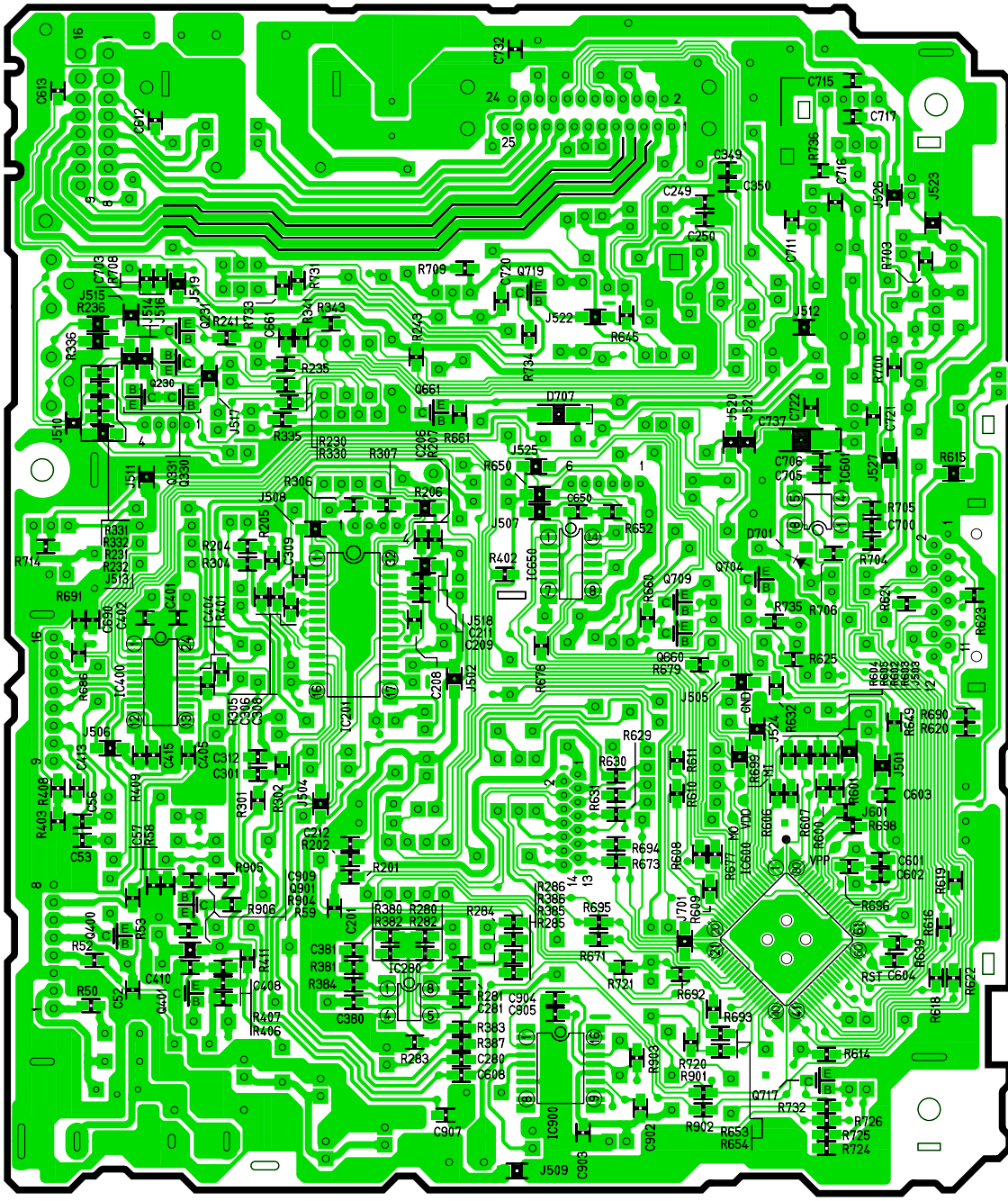

[E-6882Aa][Bottom View]

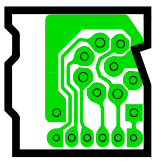

[E-6882Ab][Bottom View]

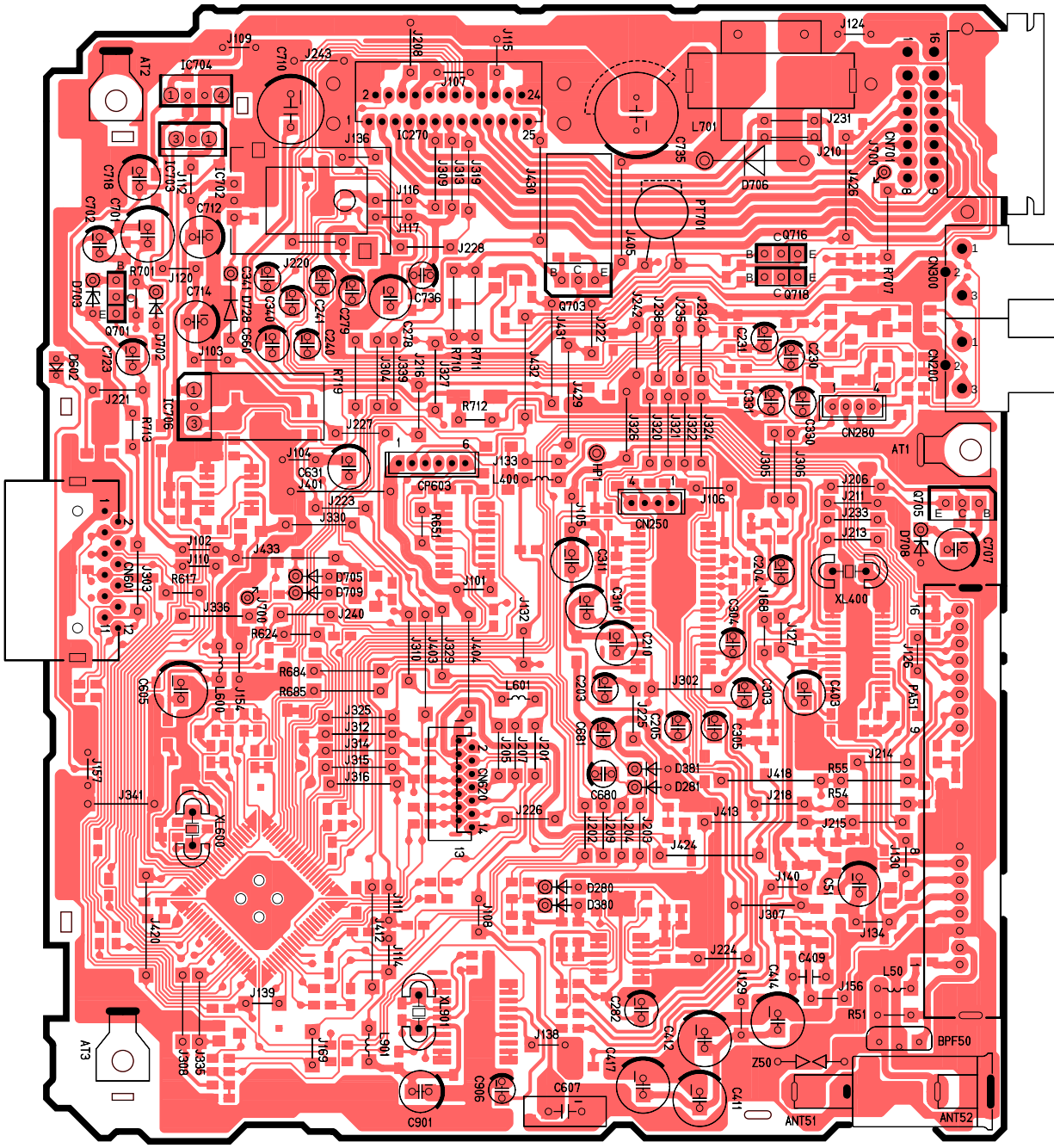

[E-6882Aa][Top View]

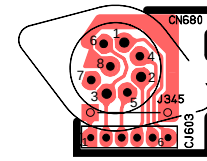

[E-6882Ab]
[Top View]