45Wx4
II/►
BAND
APM
POWER
SRC
VOLUME/PUSH SEL
MXE
Panasonic CQ-DPX153U
LOUD
D-M ST MONO TPS MTL DISC B-SKIP TRACK
LOCAL
DM
TUNE
TRACK
REP
RANDOM
CLOCK
DISP
7 8 9 10 11 12 SCAN
MUTE 1 2 3 4 5 6 LOUD

45Wx4
BAND
APM
POWER
SRC
PUSH SEL-MONO/LOC
VOLUME
Panasonic
CQ-DP153W
LOUD
D-M
ST
MONO
TPS
MTL
DISC
B-SKIP
TRACK
LOCAL
D M
TUNE
TRACK
REP
RANDOM
CLOCK
DISP
MUTE
7
8
9
10
11
12
SCAN
1
2
3
4
5
6
LOUD

178mm
150mm
50mm
45Wx4
Panasonic CQ-DP153W
BAND
APM
POWER
SRC
PUSH SEL-MONO/LOC
VOLUME
LOUD
MUTE
1
2
3
4
5
6
SCAN
RANDOM
LOUD
D M
TUNE
TRACK
REP
CLOCK
DISP

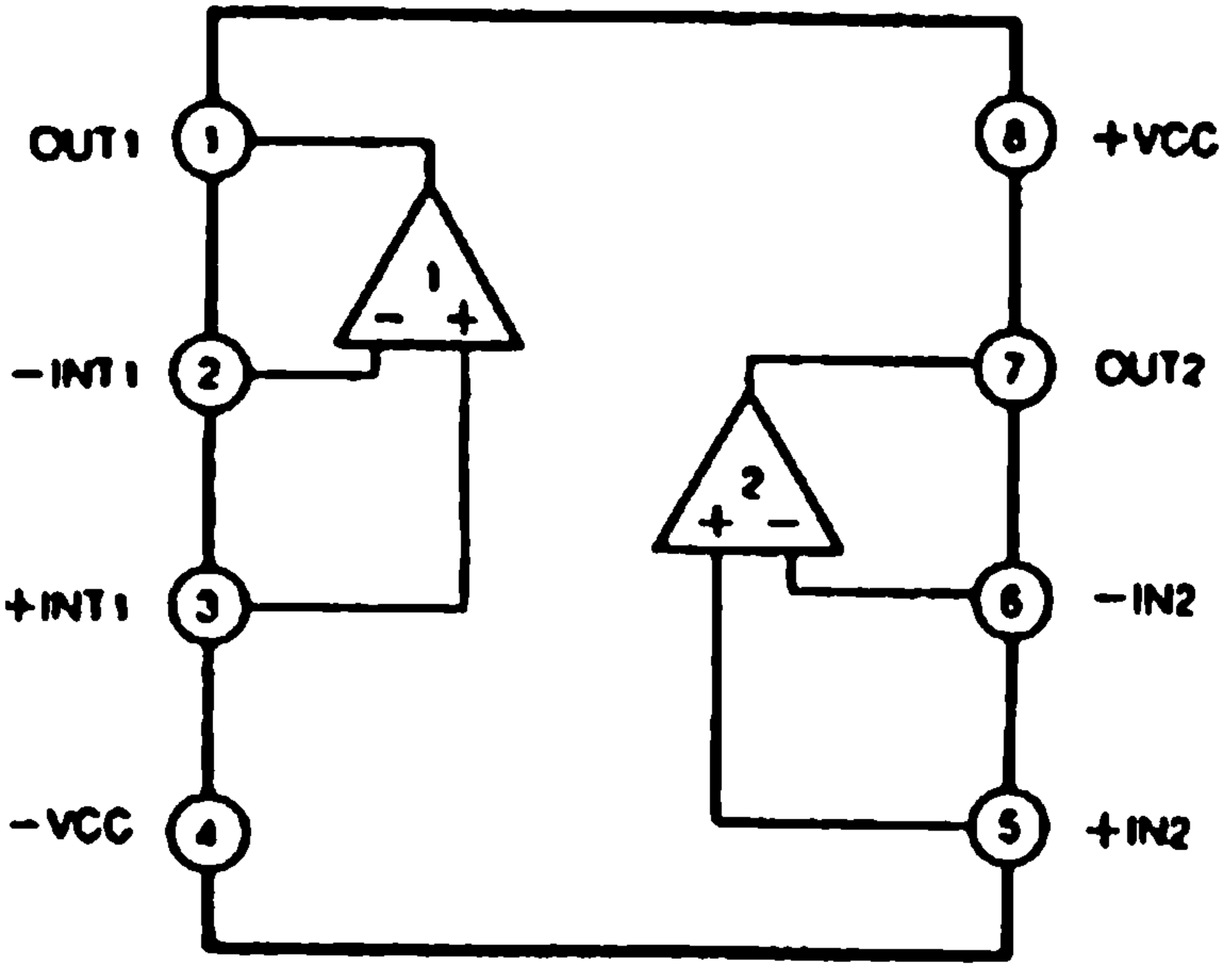
OUT1
1
-INT1
2
+INT1
3
-VCC
4
+VCC
8
OUT2
7
-IN2
6
+IN2
5
1
2

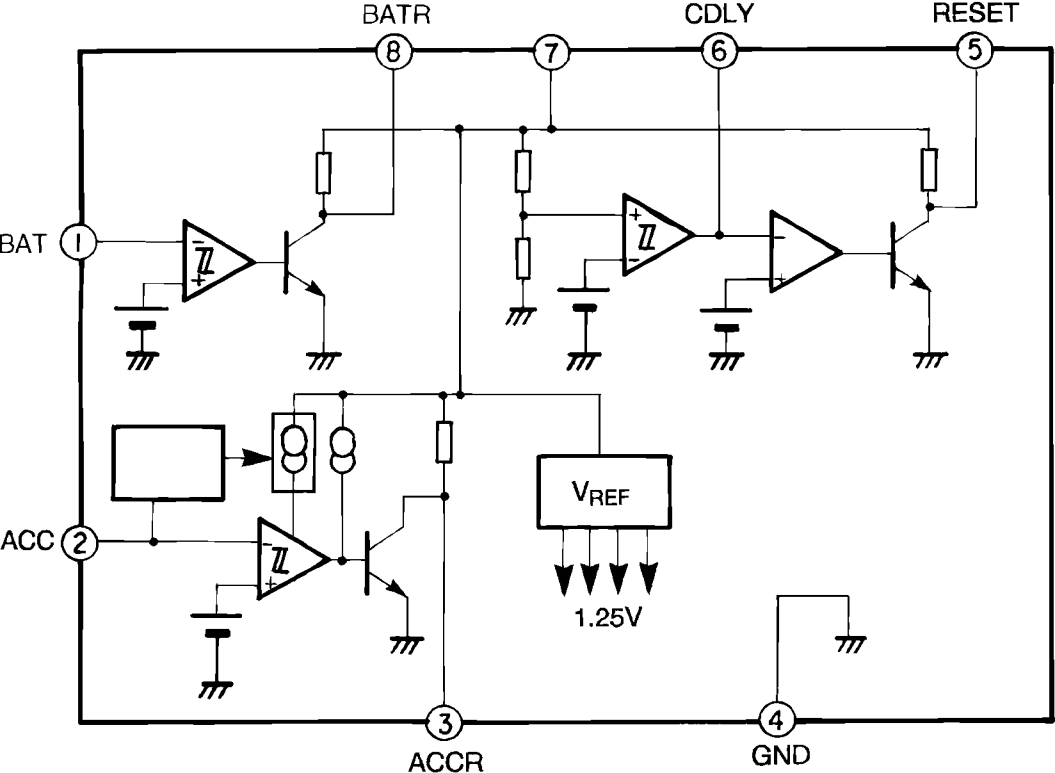
BATR
CDLY
RESET
8
7
6
5
BAT
1
ACC
2
VREF
1.25V
3
4
ACCR
GND

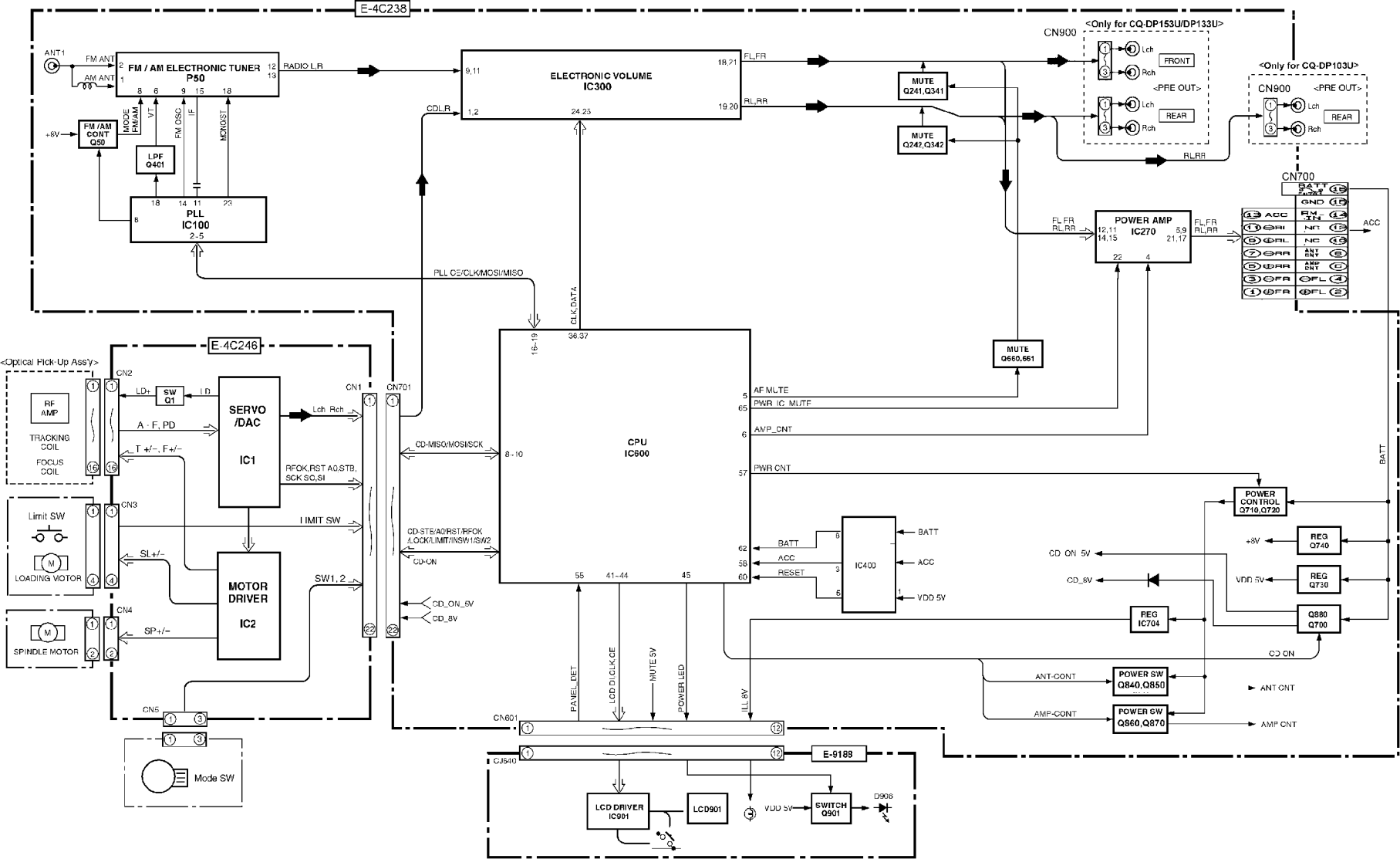
E-4C238
ANT1
FM ANT
AM ANT
FM / AM ELECTRONIC TUNER
P50
RADIO L,R
MODE FM/AM
VT
FM OSC
IF
MONOST
+8V
FM /AM CONT Q50
LPF Q401
PLL IC100
ELECTRONIC VOLUME IC300
CDL,R
FL,FR
RL,RR
MUTE Q241,Q341
MUTE Q242,Q342
CN900
<Only for CQ-DP153U/DP133U>
Lch
Rch
FRONT
<PRE OUT>
REAR
<Only for CQ-DP103U>
CN700
BATT
GND
ACC
NC
ANT CNT
AMP CNT
POWER AMP IC270
PLL CE/CLK/MOSI/MISO
CLK,DATA
E-4C246
<Optical Pick-Up Assy>
CN2
RF AMP
TRACKING COIL
FOCUS COIL
LD+
LD-
SW Q1
SERVO /DAC IC1
A - F, PD
T +/-, F+/-
Lch Rch
RFOK,RST A0,STB, SCK SO,SI
CN1
CN701
CN3
Limit SW
LOADING MOTOR
LIMIT SW
SL+/-
MOTOR DRIVER IC2
SW1, 2
CN4
SPINDLE MOTOR
SP+/-
CN5
Mode SW
CPU IC600
CD-MISO/MOSI/SCK
CD-STB/A0/RST/RFOK /LOCK/LIMIT/INSW1/SW2
CD-ON
CD_ON_5V
CD_8V
AF MUTE
PWR IC MUTE
AMP_CNT
PWR CNT
IC400
BATT
ACC
RESET
VDD 5V
MUTE Q660,661
POWER CONTROL Q710,Q720
REG Q740
REG Q730
REG IC704
Q880 Q700
CD ON
ANT-CONT
AMP-CONT
POWER SW Q840,Q850
POWER SW Q860,Q870
ANT CNT
AMP CNT
PANEL_DET
LCD DI,CLK,CE
MUTE 5V
POWER LED
ILL 8V
CN601
CJ640
E-9189
LCD DRIVER IC901
LCD901
SWITCH Q901
D906

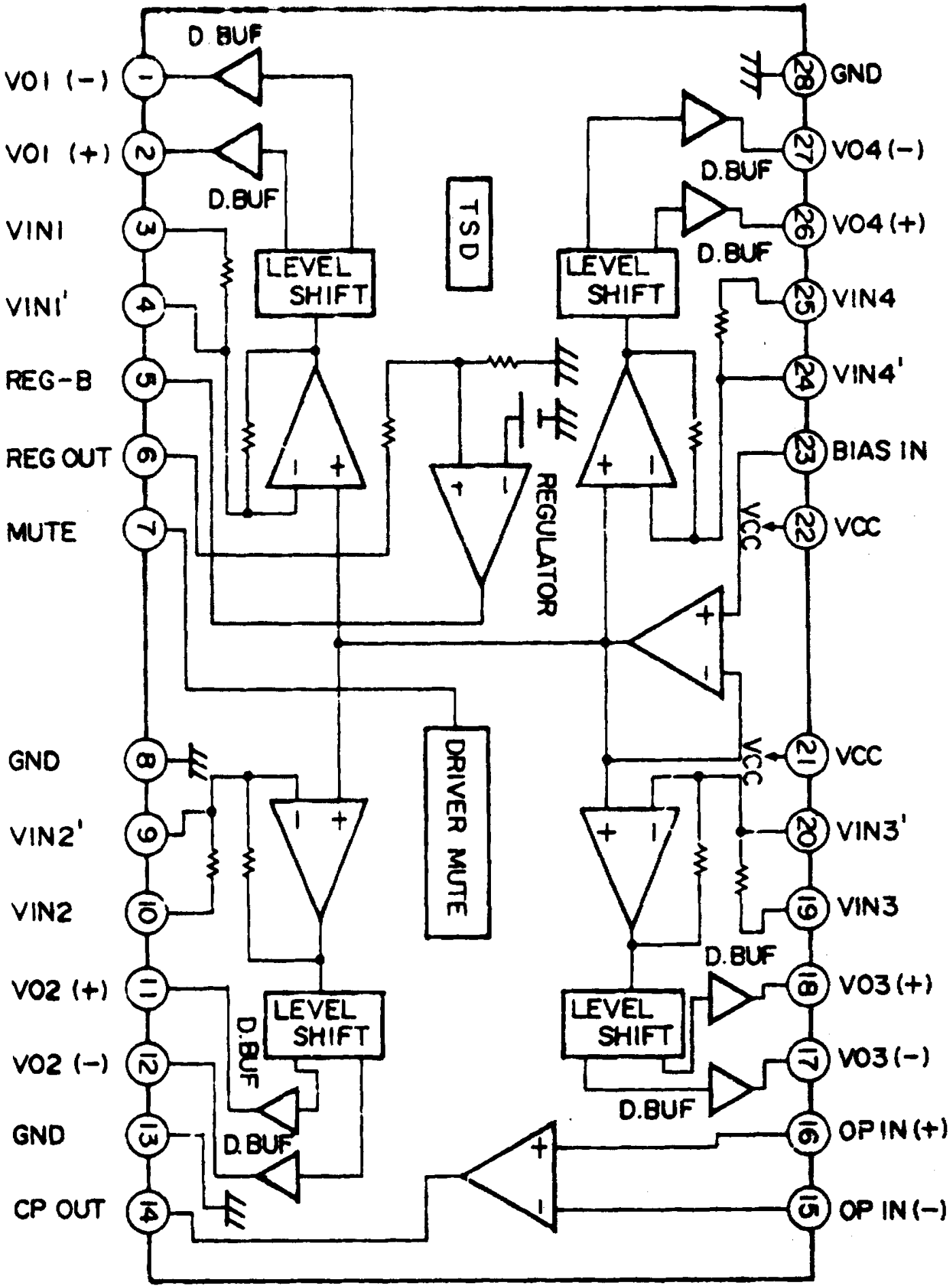
VO1 (−)
VO1 (+)
VIN1
VIN1'
REG-B
REG OUT
MUTE
GND
VIN2'
VIN2
VO2 (+)
VO2 (−)
GND
CP OUT
GND
VO4 (−)
VO4 (+)
VIN4
VIN4'
BIAS IN
VCC
VCC
VIN3'
VIN3
VO3 (+)
VO3 (−)
OP IN (+)
OP IN (−)
D. BUF
D.BUF
LEVEL SHIFT
TSD
REGULATOR
DRIVER MUTE

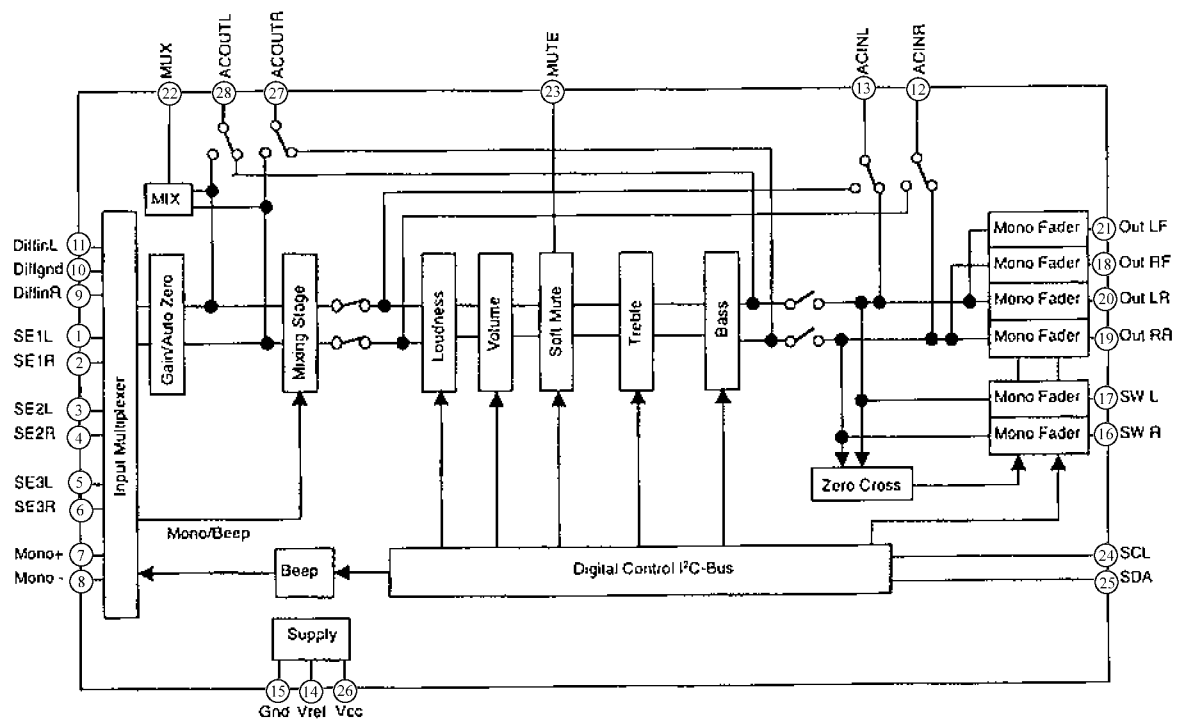
MUX
ACOUTL
ACOUTR
MUTE
ACINL
ACINR
22
28
27
23
13
12
MIX
DiffinL 11
Diffgnd 10
DiffinR 9
SE1L 1
SE1R 2
SE2L 3
SE2R 4
SE3L 5
SE3R 6
Mono+ 7
Mono - 8
Input Multiplexer
Gain/Auto Zero
Mixing Stage
Loudness
Volume
Soft Mute
Treble
Bass
Mono Fader
Mono Fader
Mono Fader
Mono Fader
Mono Fader
Mono Fader
21 Out LF
18 Out RF
20 Out LR
19 Out RR
17 SW L
16 SW R
Zero Cross
Mono/Beep
Beep
Digital Control I²C-Bus
24 SCL
25 SDA
Supply
15 Gnd
14 Vref
26 Vcc

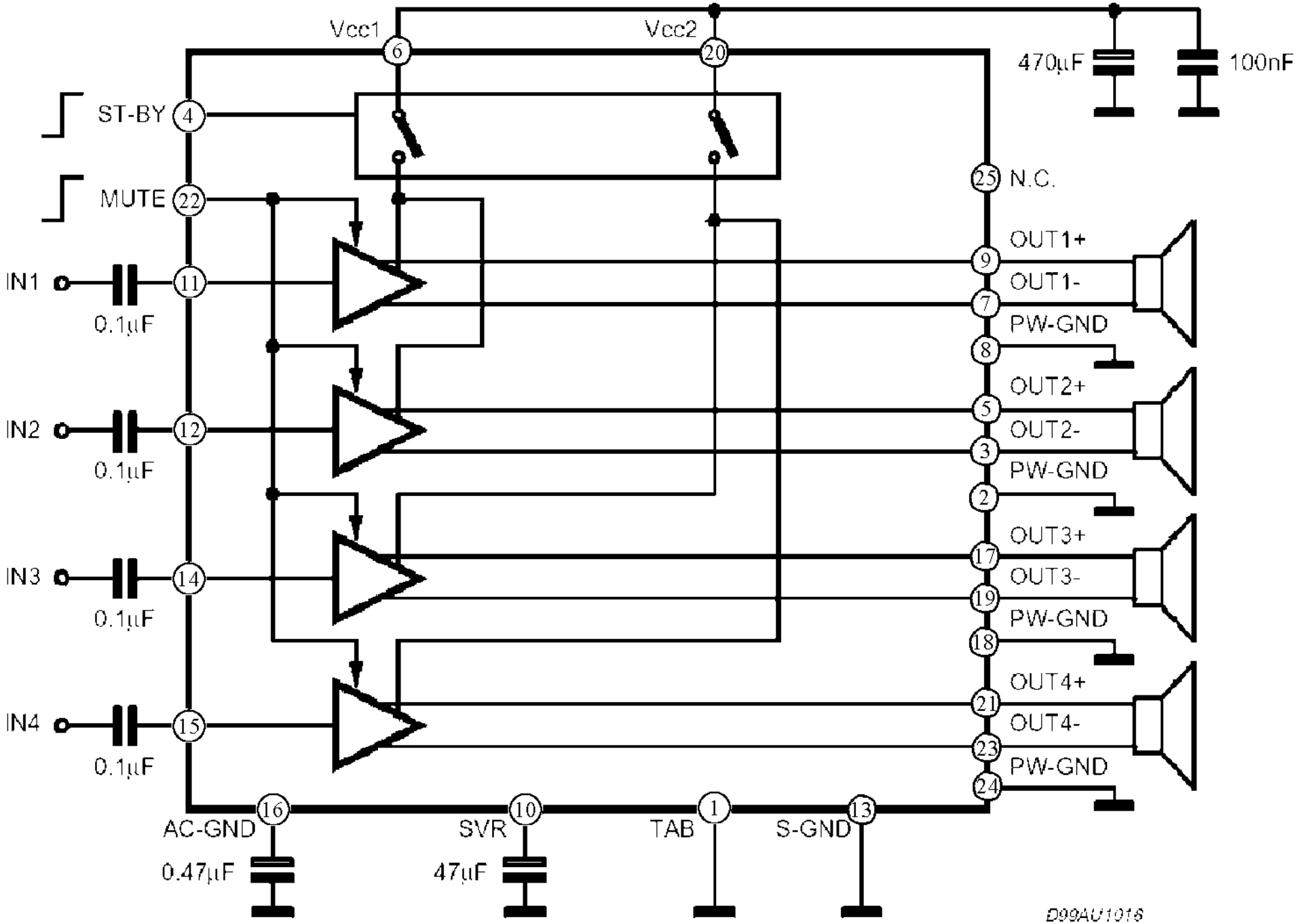
Vcc1
6
Vcc2
20
470µF
100nF
ST-BY
4
MUTE
22
25
N.C.
IN1
11
0.1µF
OUT1+
9
OUT1-
7
PW-GND
8
IN2
12
0.1µF
OUT2+
5
OUT2-
3
PW-GND
2
IN3
14
0.1µF
OUT3+
17
OUT3-
19
PW-GND
18
IN4
15
0.1µF
OUT4+
21
OUT4-
23
PW-GND
24
16
AC-GND
0.47µF
10
SVR
47µF
1
TAB
13
S-GND
D99AU1016

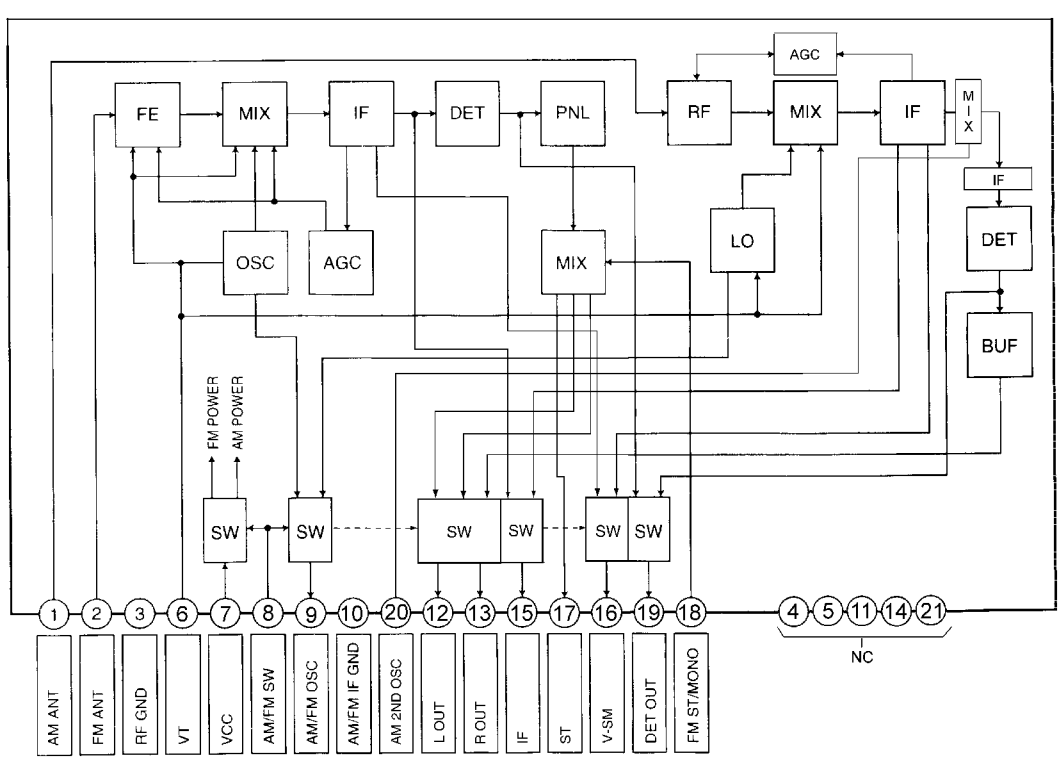
AGC
FE
MIX
IF
DET
PNL
RF
MIX
IF
MIX
IF
DET
BUF
LO
OSC
AGC
MIX
FM POWER
AM POWER
SW
SW
SW
SW
SW
SW
1
2
3
6
7
8
9
10
20
12
13
15
17
16
19
18
4
5
11
14
21
NC
AM ANT
FM ANT
RF GND
VT
VCC
AM/FM SW
AM/FM OSC
AM/FM IF GND
AM 2ND OSC
L OUT
R OUT
IF
ST
V-SM
DET OUT
FM ST/MONO

ORDER No. ACED030325C3

Service Manual

AUTOMOTIVE AFTERMARKET

COMPACT disc DIGITAL AUDIO

CQ-DP143WJ

Removable Front Panel CD Player / Receiver

Specification*

General	
Power Supply	DC 12V (11V - 16V), Test Voltage 14.4V Negative Ground
Tone Controls	Bass ; ±12dB at 100Hz Treble ; ±12dB at 10kHz
Current Consumption	Less than 2.2A (CD play mode, 0.5W×4ch)
Maximum Power Output	45W×4ch (at 1kHz, Vol. Max.)
Suitable Speaker Impedance	4-8Ω
Pre-Amp Output Voltage	2V (CD play mode; 1kHz, 0dB)
Output Impedance	600Ω
FM Stereo Radio	
Frequency Range	87.5 - 108MHz
Usable Sensitivity	11.0dBf (1.25µV, 75Ω)
AM Radio	
Frequency Range	531 - 1,602kHz
Usable Sensitivity	28dB/µV (25µV, S/N 20dB)
CD Player	
Sampling Frequency	32 times oversampling
Pick-Up Type	Astigma 3-beam
Light Source	Semiconductor Laser
Wavelength	780nm
Frequency Response	20Hz to 20,000Hz (±1dB)
Signal to Noise Ratio	96dB
Dimensions**	178×50×150mm
Weight**	1.4kg

* Specifications and the design are subject to possible modification without notice due to improvements.

** Dimensions and Weight shown are approximate.

⚠ WARNING

This service information is designed for experienced repair technicians only and is not designed for use by the general public. It does not contain warnings or cautions to advise non-technical individuals of potential dangers in attempting to service a product. Products powered by electricity should be serviced or repaired only by experienced professional technicians. Any attempt to service or repair the product or products dealt with in this service information by anyone else could result in serious injury or death.

IMPORTANT SAFETY NOTICE

There are special components used in this equipment which are important for safety. These parts are marked by ⚠ in the Schematic Diagrams, Circuit Board Diagrams, Exploded Views and Replacement Parts List. It is essential that these critical parts should be replaced with manufacturer's specified parts to prevent shock, fire or other hazards. Do not modify the original design without permission of manufacturer.

Panasonic®

© 2003 Matsushita Electric Industrial Co., Ltd. All rights reserved. Unauthorized copying and distribution is a violation of law.

CONTENTS

	Page
1 FEATUERS	2
2 LASER PRODUCTS	2
3 REPLACEING THE FUSE	2
4 MAINTENANCE	2
5 NOTES	2
6 DIMENSIONS	2
7 WIRING DIAGRAM	3
8 BLOCK DIAGRAM	4
9 WIRING CONNECTION	5
10 SCHEMATIC DIAGRAM	9
11 TERMINALS DESCRIPTION	13
12 PACKAGE AND IC BLOCK DIAGRAM	15
13 REPLACEMENT PARTS LIST	19
14 EXPLODED VIEW (Unit)	24
15 CD PLAYER MECHANICAL PARTS LIST	25
16 EXPLODED VIEW (CD Deck)	26
17 SCHEMATIC DIAGRAM for printing with A4 size	27

1 FEATUERS

- PLL (Phase Locked Loop) synthesized tuning.
- 18-FM, 6-AM presets with preset scan
- Digital servo for reliable CD playback.
- Removable face plate.

2 LASER PRODUCTS

CAUTION:

This product utilizes a laser diode with the unit turned "on", laser radiation is emitted from the pickup lens.
Laser radiation from the pickup lens is safety level, but be sure the followings:

1. Do not disassemble the optical pickup unit, since radiation from exposed laser diode is dangerous.
2. Do not adjust the variable resistor on the pickup unit. It was already adjusted.
3. Do not look at the focus lens using optical instruments.
4. Recommend not to look at pickup lens for a long time.

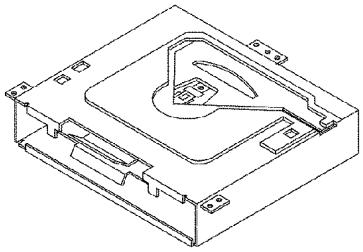

Deck Ass'y (Upper Side)

Caution
This Product utilizes a laser.
Use of controls or adjustments or performance of procedures other than those specified herein may result in hazardous radiation exposure.

3 REPLACEING THE FUSE

Use fuses of the same specified rating (15A). Using different substitutes or fuses with higher ratings, or connecting the product directly without a fuse, could cause fire or damage to the stereo unit.

4 MAINTENANCE

Your products is designed and manufactured to ensure a minimum of maintenance. Use a dry, a soft cloth for routine exterior cleaning. Never use benzine, thinner or other solvents.

5 NOTES

[RADIO BLOCK]

Do not align the AM/FM package block. When the package block is necessary, it will be supplied already aligned at the factory.

[CD DECK BLOCK]

This model has no servo alignment points because microcomputer controls the servo circuit.

6 DIMENSIONS

7 WIRING DIAGRAM

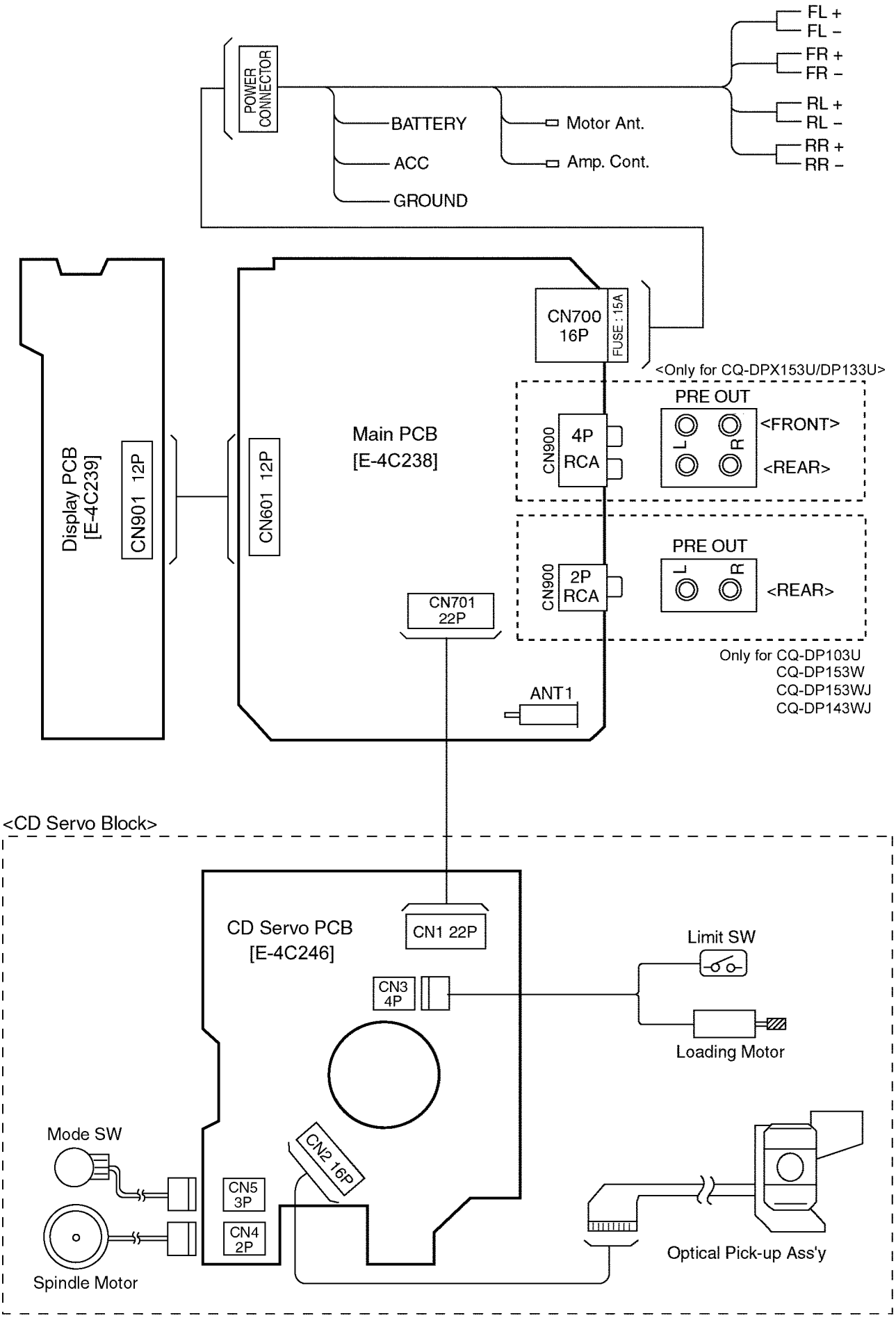

8 BLOCK DIAGRAM

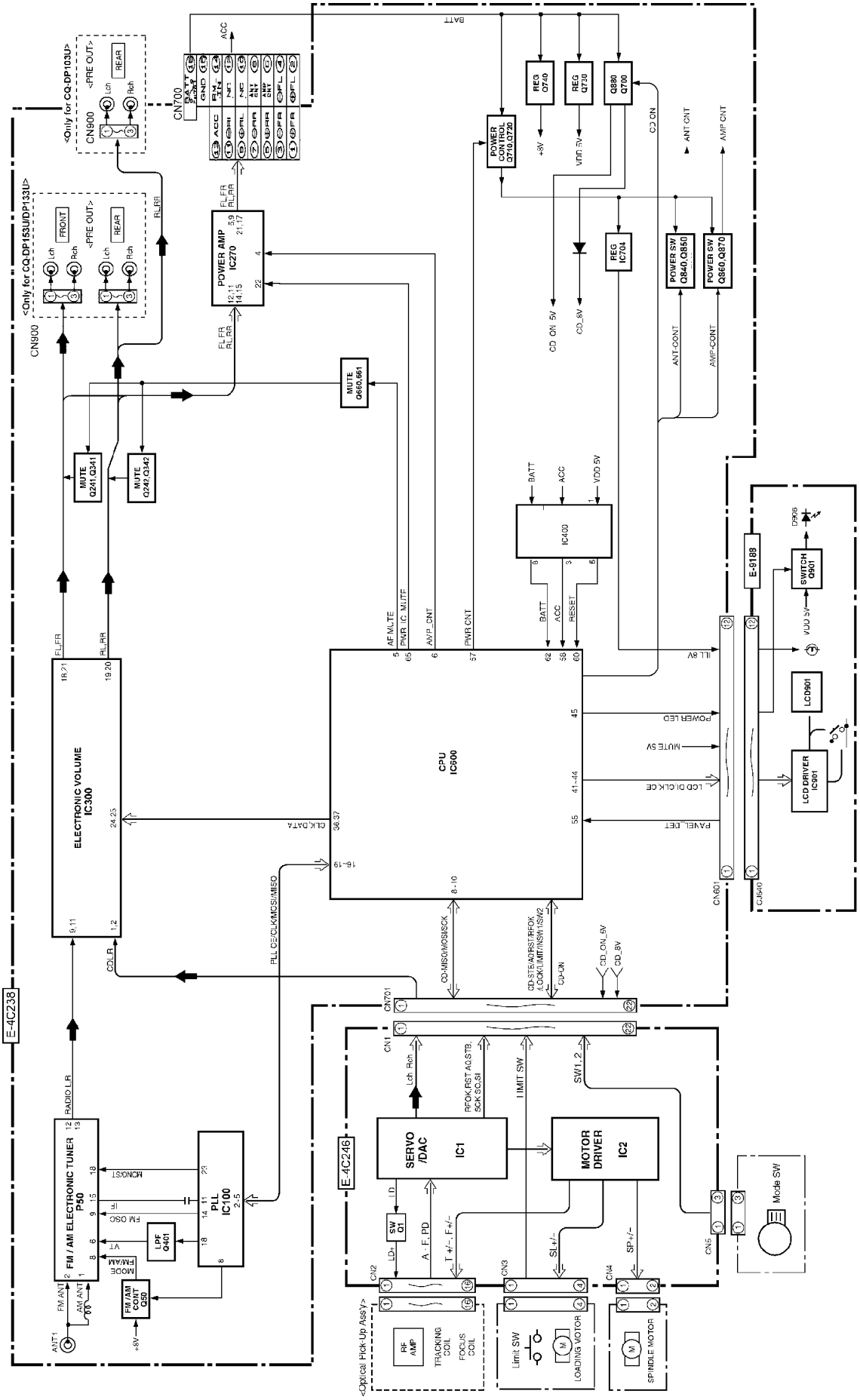

9 WIRING CONNECTION

9.1. Main Block-1

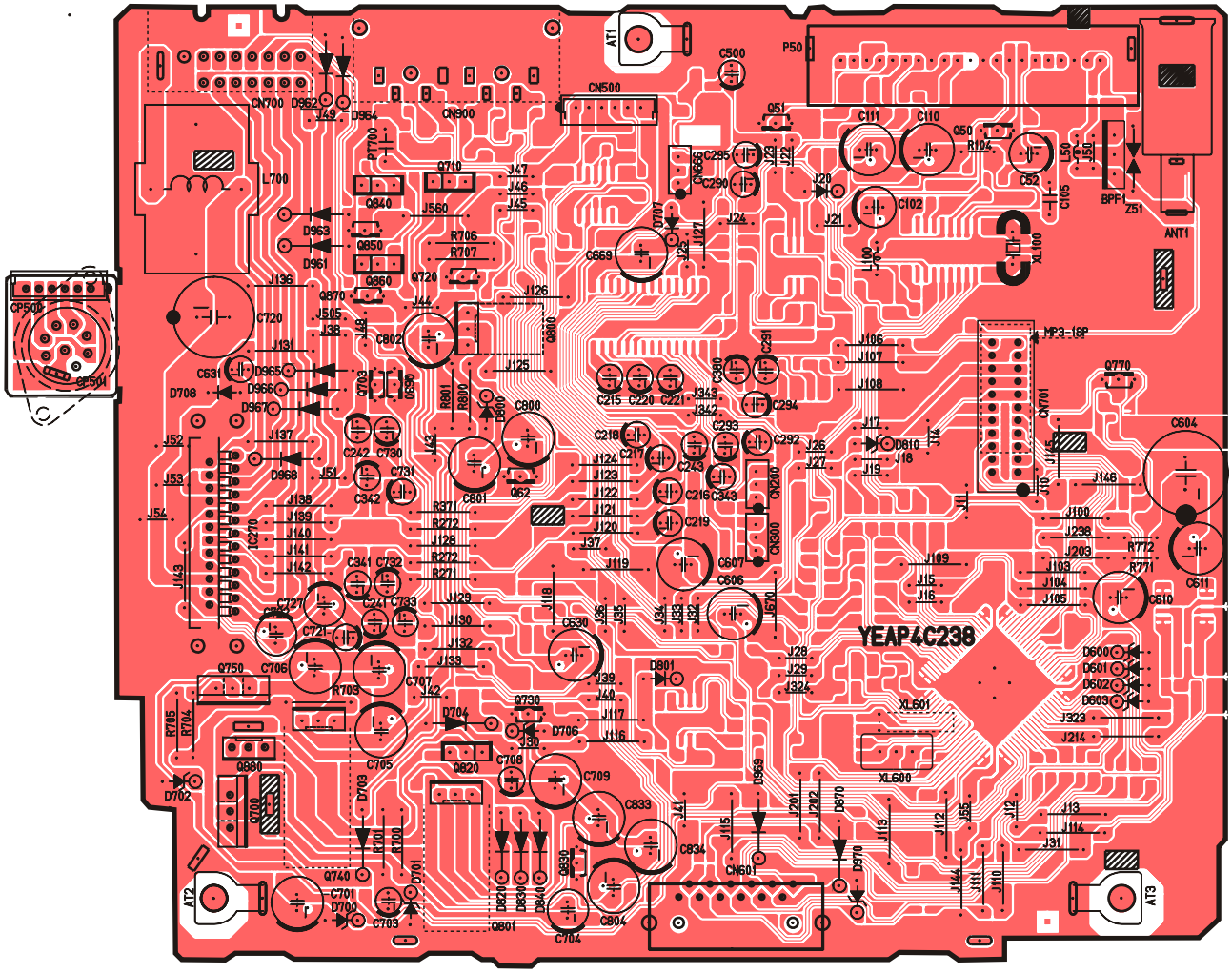

[E-4C238] [TOP VIEW]

CQ-DP143WJ / DP153(W.WJ) Main PCB

9.2. Main Block-2

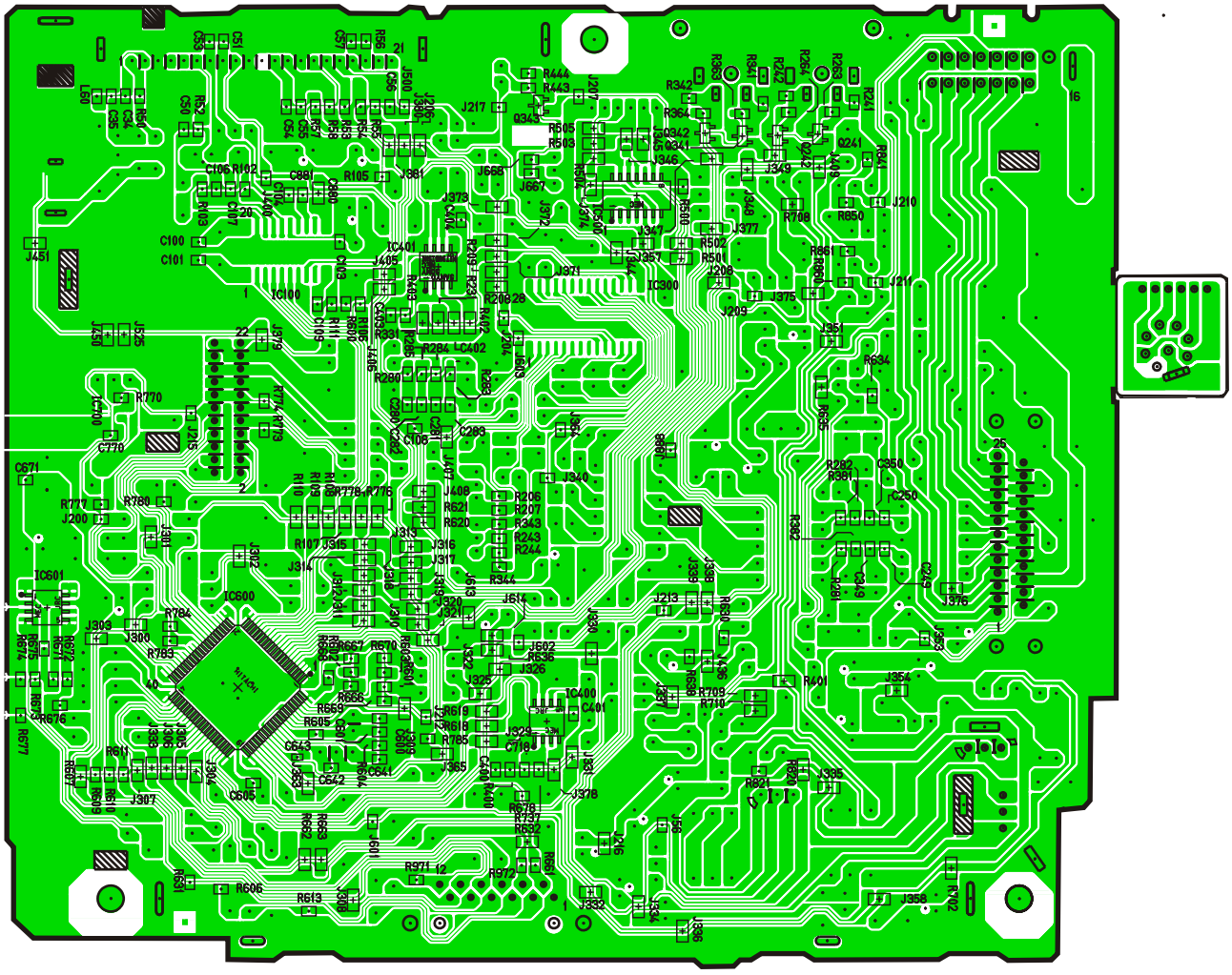

[E-4C238] [BOTTOM VIEW]

CQ-DP143WJ / DP153(W.WJ) Main PCB

9.3. Display Block

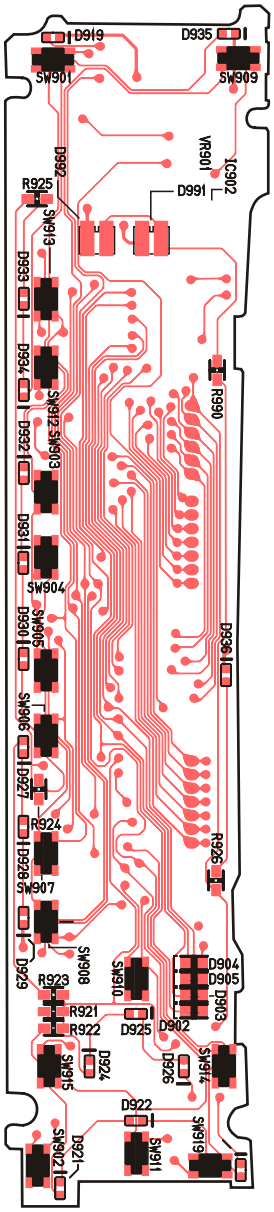

[E-4C239] [TOP VIEW]

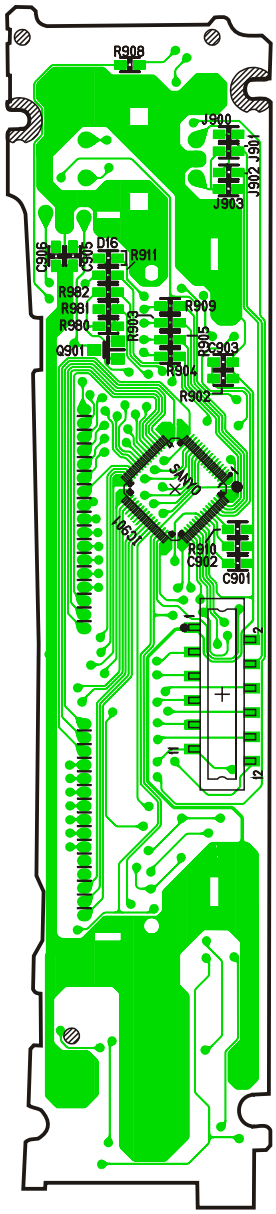

[E-4C239] [BOTTOM VIEW]

CQ-DP143WJ / DP153(W.WJ) Display PCB

9.4. CD SERVO Block

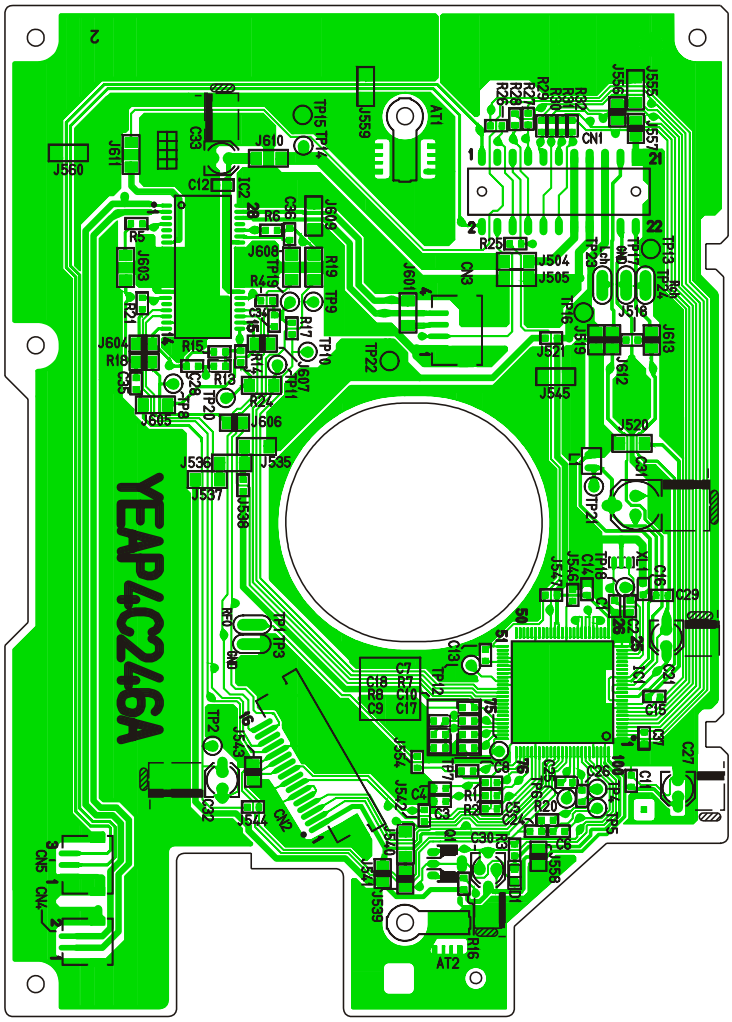

[E-4C246] [BOTTOM VIEW]

CQ-DP143WJ / DP153(W.WJ) CD SERVO PCB

10 SCHEMATIC DIAGRAM

10.1. Main Block

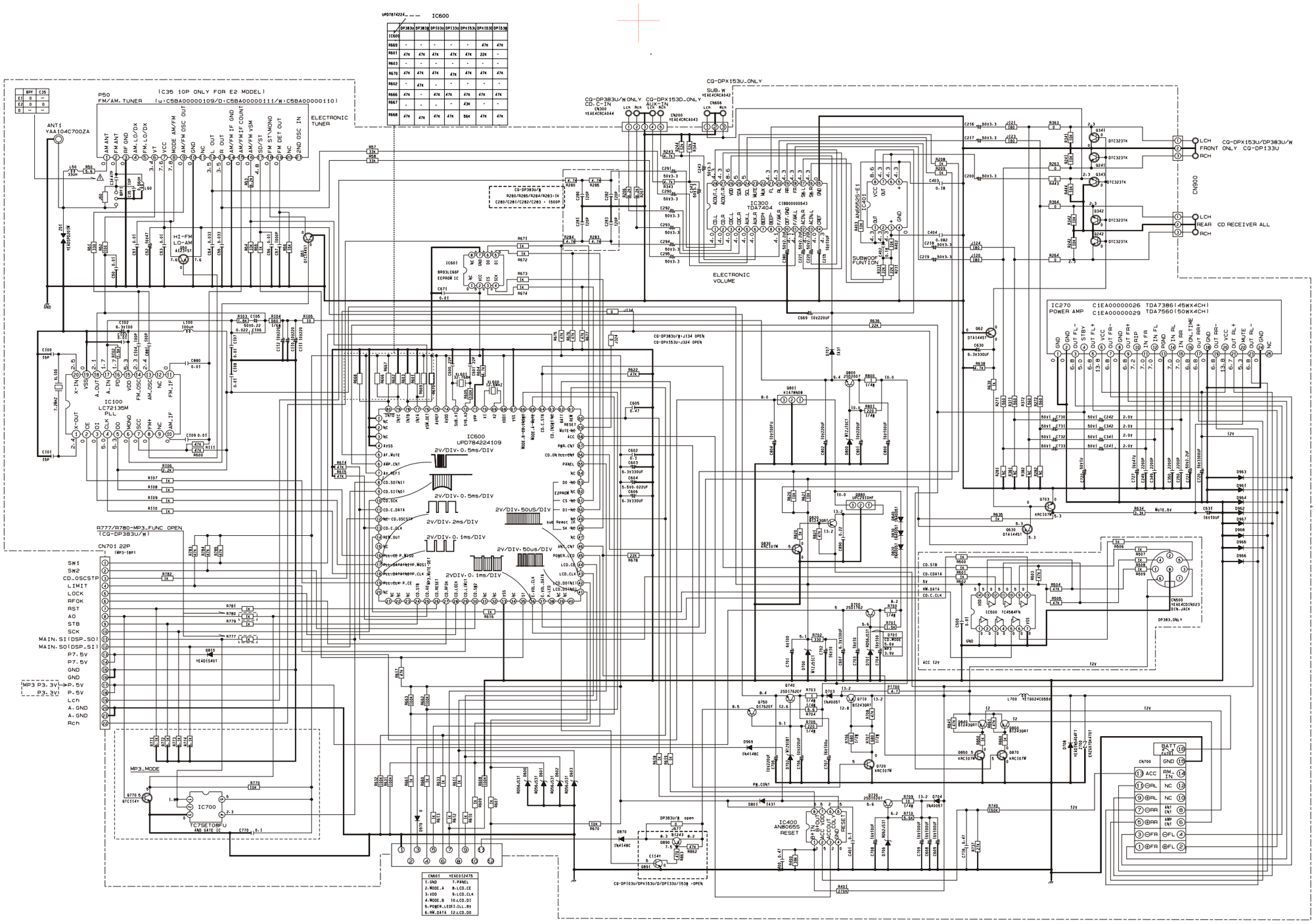

CQ-DP143WJ / DP153(W.WJ) MainBlock

10.2. Display Block

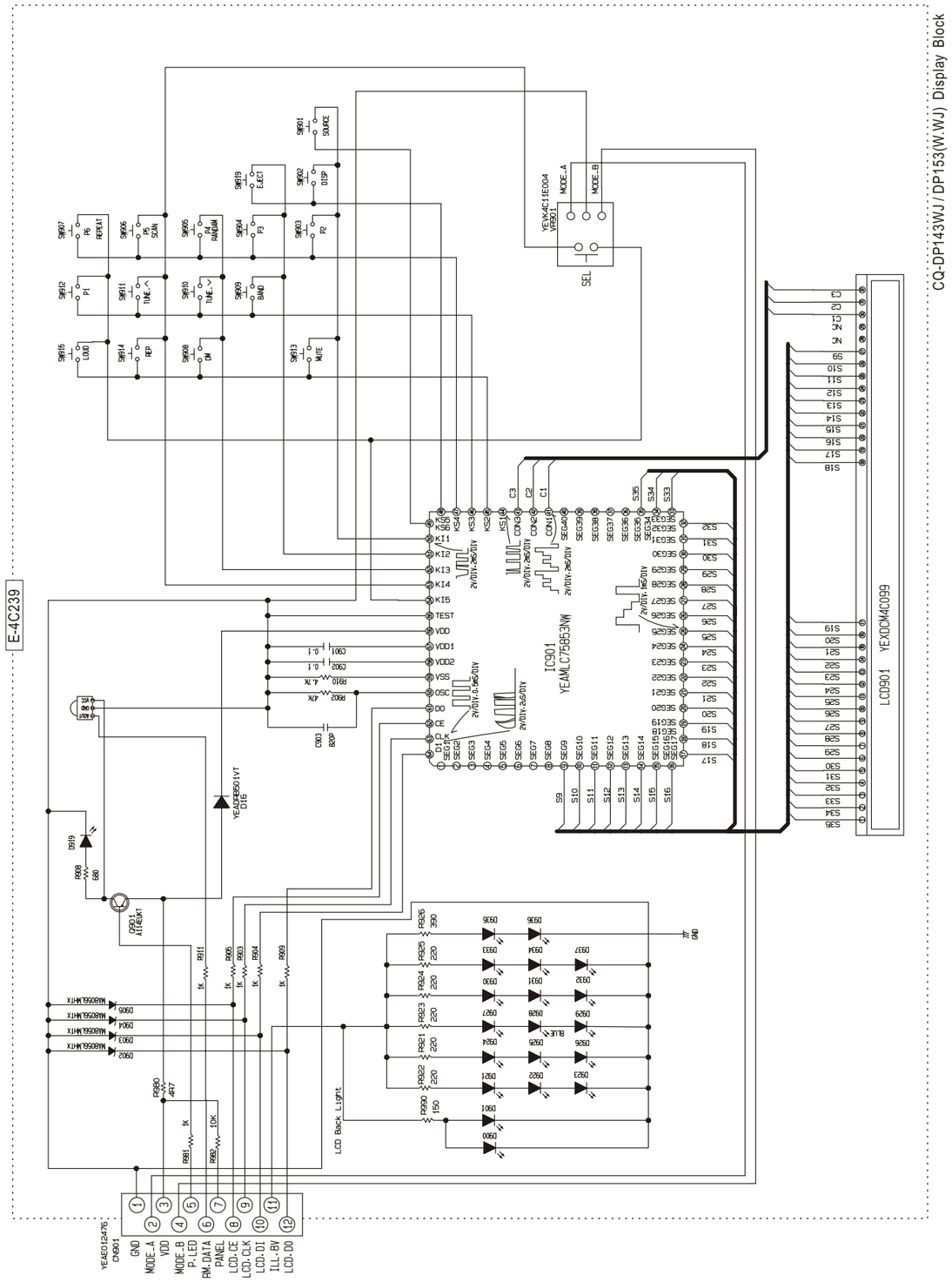

10.3. CD Servo Block

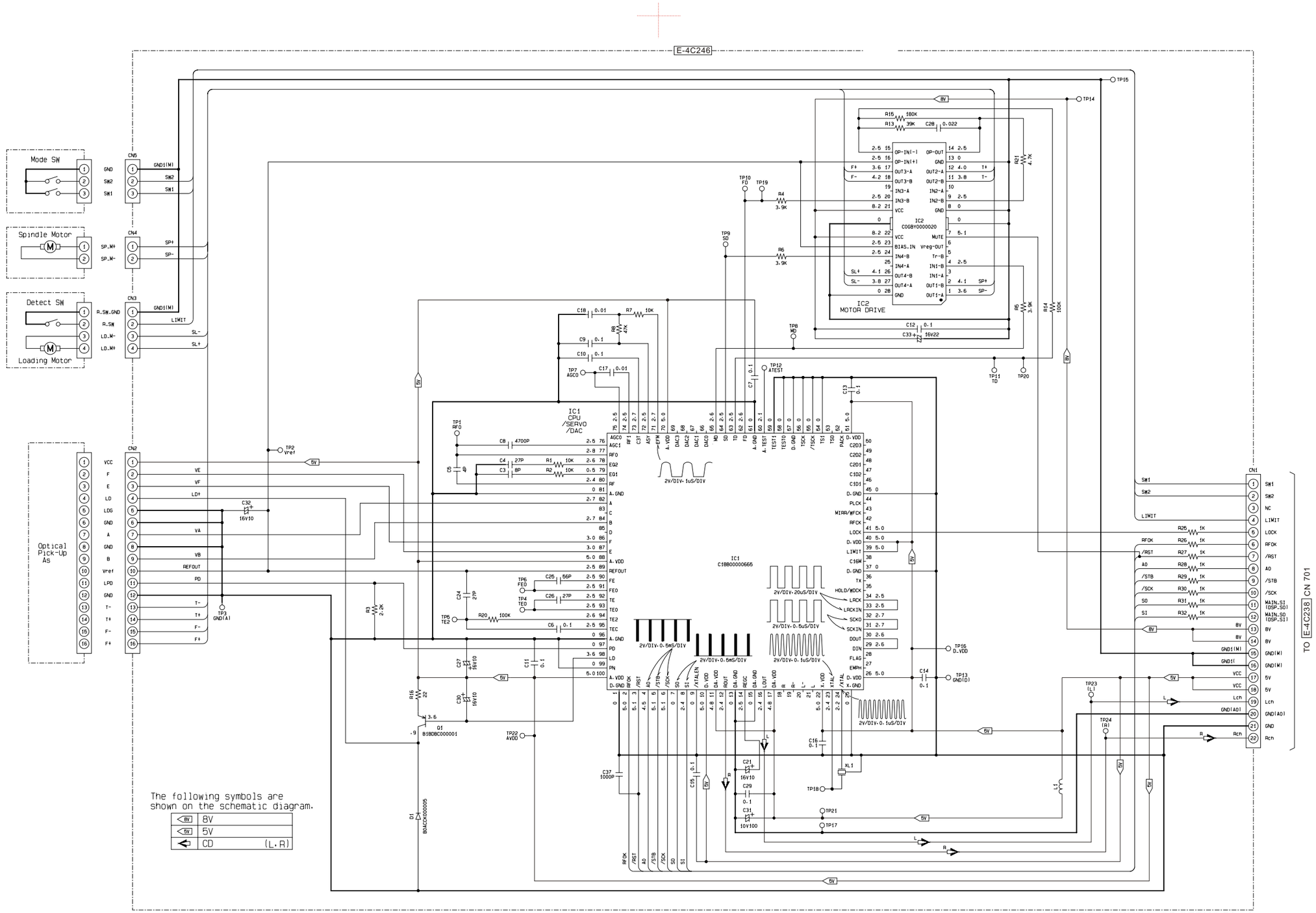

CQ-DP143WJ / DP153(W.WJ) CD SERVO Block

11 TERMINALS DESCRIPTION

11.1. Main Block

IC600 : UPD784224113

Pin No.	Port	Descriptions	I/O (V)	FM (V)	AM (V)	CD (V)
1	NC	(Connecting to ground)	-	0	0	0
2	NC	(Connecting to ground)	-	0	0	0
3	NC	(Connecting to ground)	-	0	0	0
4	AVSS	Analog ground	-	0	0	0
5	AF MUTE	AF mute	O	5.1	5.1	5.2
6	AMP-CNT	Power Amp. stand-by	O	5.1	5.1	5.2
7	AVREF	Reference voltage	-	5.1	5.1	5.2
8	CD-MISO	CD data	I	0	0	0
9	CD-MOSI	CD data	O	0	0	2.4
10	CD-SCK	CD clock	O	0	0	5.1
11	CD.C DATA	Not used	-	-	-	-
12	NC	No connection	-	-	-	-
13	CD.C CLK	Not used	-	-	-	-
14	REM OUT	Not used	-	-	-	-
15	BZOUT	Not used	-	-	-	-
16	PLL-MISO	Data from PLL	I	5.1	5.1	5.1
17	PLL-MOSI	Data for PLL	O	0	0	0
18	PLL-CLK	Clock for PLL	O	5.1	5.1	5.2
19	PLL-CE	PLL chip enable	O	0	0	0
20	NC	No connection	-	-	-	-
21	NC	No connection	-	-	-	-
22	NC	No connection	-	-	-	-
23	NC	No connection	-	-	-	-
24	CD-STB	CD strobe	O	0	0	5.1
25	CD-A0	CD address 0	O	0	0	4.4
26	CD-RST	CD reset	O	0	0	5.1
27	CD-RFOK	CD RFOK signal	I	0	0	5.0
28	CD-LOCK	CD lock signal	I	0	0	5.0
29	CD-LIMIT	CD limit sw	I	0	0	5.1
30	CD-SW2	CD SW2	I	5.1	5.1	0
31	NC	No connection	-	-	-	-
32	NC	No connection	-	-	-	-
33	Vss	Ground	-	0	0	0
34	S.LED	Not used	-	-	-	-
35	ST-IND	FM stereo detection	I	5.0	5.1	5.1
36	IC2-CLK	Electronic volume clock	O	5.1	5.1	5.2
37	IC2-DATA	Electronic volume data	I/O	5.1	0	5.2
38	NC	No connection	-	-	-	-
39	NC	No connection	-	-	-	-
40	NC	No connection	-	-	-	-
41	LCD-MOSI	LCD data output	O	0	0	0
42	LCD-MISO	LCD data input	I	5.0	5.0	5.0
43	LCD-CLK	LCD clock	O	0	0	0
44	LCD-CE	LCD chip enable output	O	0	0	0
45	POWER LED	Pilot lamp on	O	0	0	0
46	ANT.CONT	Motor antenna control	O	5.1	5.1	0
47	NC	No connection	-	-	-	-
48	NC	No connection	-	-	-	-
49	REM-IN_SUB	Remote control sig. sampling	I	0	4.4	4.4
50	NC	No connection	-	-	-	-
51	NC	No connection	-	-	-	-
52	NC	No connection	-	-	-	-
53	NC	No connection	-	-	-	-
54	TEL-MUTE	Not used	-	-	-	-
55	PANEL-DET	Panel detect	I	0	4.8	4.9
56	CD-ON	CD power control	O	0	0	5.1
57	PWR CNT	Power control	O	5.0	5.0	5.0
58	ACC-DET	ACC detection	I	5.1	5.1	5.1
59	MUTE	MUTE	0	5.1	5.1	5.1
60	/RESET	Reset input	I	5.1	5.1	5.1
61	REM	Remocon data input	I	4.4	4.4	4.4
62	BATT	Battery detection	I	5.1	5.1	5.1
63	CD SW1	CD SW1	I	0	0	0
64	CD.C.STB	(Ground pull-down)	I	0	0	0
65	MODE A	MODE A	I	0	0	0
66	MODE B	MODE B	I	0	0	0
67	VSS	Ground	-	0	0	0
68	VDD	+5V power supply	-	5.1	5.1	5.1
69	X2	Crystal oscillator	-	3.1	3.1	3.1
70	X1	Crystal oscillator	-	2.2	2.2	2.2
71	Vpp	(Ground pull-down)	-	0	0	0
72	SUB-X2	Crystal oscillator	-	3.1	3.1	3.1
73	SUB-X1	Crystal oscillator	-	2.5	2.5	2.5
74	AVDD	+5V power supply	-	5.1	5.1	5.1
75	AVREF	(Connecting to VDD)	-	5.1	5.1	5.1
76	VSM_DET	S-meter detection	I	0	0	0
77	INIT A	Initial value A	I	0	0	0
78	INIT B	Initial value B	I	0	0	0
79	INIT C	Initial value C	I	0	0	0
80	INIT D	Initial value D	I	0	0	0

Note 1 :

Voltage measuerments are with respect to ground, with a voltmeter (internal resistance : 10M ohms).

11.2. Display Block

IC901 : YEAMLC75853W

Pin No.	Port	Descriptions	I/O (V)	(V)
1-8	SEG1-8	LCD segment	O	2.5
9-35	SEG9-35	LCD segment	O	2.5
36-39	NC	No connection	-	-
40-43	COM1-4	LCD common	O	2.5
44-49	KS1-6	Key data output	O	0.9
50-54	KI1-5	Key data input	I	0
55	TEST	(Connecting to ground)	-	0
56	VDD	+5V power supply	-	5.1
57	VDD1	Ground through capacitor	-	3.3
58	VDD2	Ground through capacitor	-	1.7
59	Vss	Ground	-	0
60	OSC	CR oscillator	-	3.9
61	DO	Key data output	O	4.4
62	CE	Chip enable	I	0
63	CLK	LCD clock	I	0
64	DI	LCD data input	I	0

11.3. CD Servo Block

IC1 : C1BB00000665

Pin No.	Port	Descriptions	I/O	Vol. (V)
1	D.GND	Digital logic Ground	-	0
2	RFOK	RFOK output signal	O	5.0
3	/RST	System reset	I	5.1
4	A0	Command/Parameter specification	I	4.5
5	/STB	Serial data strobe	I	5.1
6	/SCK	Data shift clock	I	5.1
7	SO	Serial data	O	0
8	SI	Serial data	I	2.4
9	XTALEN	(Connecting to ground)	-	0
10	D.VDD	Digital logic power supply	-	5.0
11	DA.VDD	DAC power supply	-	4.8
12	R_OUT	Audio R ch	O	2.4
13	DA.GND	DAC ground	-	0
14	REGC	Bypass capacitor for SCF regurator	-	2.5
15	DA.GND	DAC ground	-	0
16	L_OUT	Audio L ch	O	2.4
17	DA.VDD	DAC power supply	-	4.8

Pin No.	Port	Descriptions	I/O	Vol. (V)
18	R+	Not used	-	-
19	R-	Not used	-	-
20	L-	Not used	-	-
21	L+	Not used	-	-
22	X.VDD	Crystal OSC power supply	-	5.0
23	/XTAL	Crystal OSC terminal	-	2.4
24	XTAL	Crystal OSC terminal	-	2.2
25	X.GND	Crystal OSC ground	-	0
26	D.VDD	Digital logic power supply	-	5.0
27	EMPH	Not used	-	-
28	FLAG	Not used	-	-
29	DIN	DAC serial data	I	2.6
30	DOUT	DAC serial data	O	2.6
31	SCKIN	DAC shift clock	I	2.7
32	SCKO	DAC shift clock	O	2.7
33	LRCKIN	DAC LRCK signal	I	2.5
34	LRCK	DAC LRCK signal	O	2.5
35	HOLD/WDCK	Not used	-	-
36	TX	Not used	-	-
37	D.GND	Digital logic Ground	-	0
38	C16M	Not used	-	-
39	LIMIT	(Connecting to VDD)	-	5.0
40	D.VDD	Digital logic power supply	-	5.0
41	LOCK	EFM SYNC detection	O	5.0
42	RFCK	Not used	-	-
43	MIRR/WFCK	Not used	-	-
44	PLCK	Not used	-	-
45	D.GND	Digital logic Ground	-	0
46	C1D1	Not used	-	-
47	C1D2	Not used	-	-
48	C2D1	Not used	-	-
49	C2D2	Not used	-	-
50	C2D3	Not used	-	-
51	D.VDD	Digital logic power supply	-	5.0
52	PACK	Not used	-	-
53	TSO	Not used	-	-
54	TSI	(Connecting to ground)	-	0
55	/TSCK	(Connecting to ground)	-	0
56	TSTB	(Connecting to ground)	-	0
57	D.GND	Digital logic Ground	-	0
58	TEST0	(Connecting to ground)	-	0
59	TEST1	(Connecting to ground)	-	0
60	ATEST	Not used	-	2.1
61	A.GND	Analog logic Ground	-	0
62	FD	Focus drive	O	2.6
63	TD	Traking drive	O	2.5
64	SD	Sled drive	O	2.5
65	MD	Spindle drive	O	2.6
66	DAC0	Not used	-	-
67	DAC1	Not used	-	-
68	DAC2	Not used	-	-
69	DAC3	Not used	-	-
70	A.VDD	Analog logic power supply	-	5.0
71	EFM	EFM signal	O	2.7
72	ASY	Reference voltage for EFM comp.	I	2.5
73	C3T	Capacitor terminal for 3T detection	-	2.7
74	RFI	RF for EFM data generation	I	2.5
75	AGCO	RF signal output (after gain adjustment)	O	2.5
76	AGCI	RF-AGC amp input	I	2.5
77	RFO	RF summing amp output	O	2.8
78	EQ2	C/R terminal for RF amp equalizer	-	2.6
79	EQ1	C/R terminal for RF amp equalizer	-	0.5
80	RF-	RF summing amp inverted input	I	2.4
81	A.GND	Analog logic Ground	-	0
82	A	Photo detector A input	I	2.7
83	C	Photo detector C input	I	2.5
84	B	Photo detector B input	I	2.7
85	D	Photo detector D input	I	2.5
86	F	Photo detector F input	I	3.0
87	E	Photo detector E input	I	3.0
88	A.VDD	Analog logic power supply	-	5.0

Pin No.	Port	Descriptions	I/O	Vol. (V)
89	REFOUT	Reference voltage output	O	2.5
90	FE-	Focus error amp input	I	2.5
91	FE0	Focus error amp output	O	2.5
92	TE-	Tracking error amp input	I	2.5
93	TE0	Tracking error amp output	O	2.5
94	TE2	Tracking error amp output	O	2.6
95	TEC	Tracking comparator input	I	2.5
96	A.GND	Analog logic Ground	-	0
97	PD	PD detection	I	0
98	LD	LD control	O	3.6
99	PN	(Connecting to ground)	-	0
100	A.VDD	Analog logic power supply	-	5.0

12 PACKAGE AND IC BLOCK DIAGRAM

12.1. Main Block

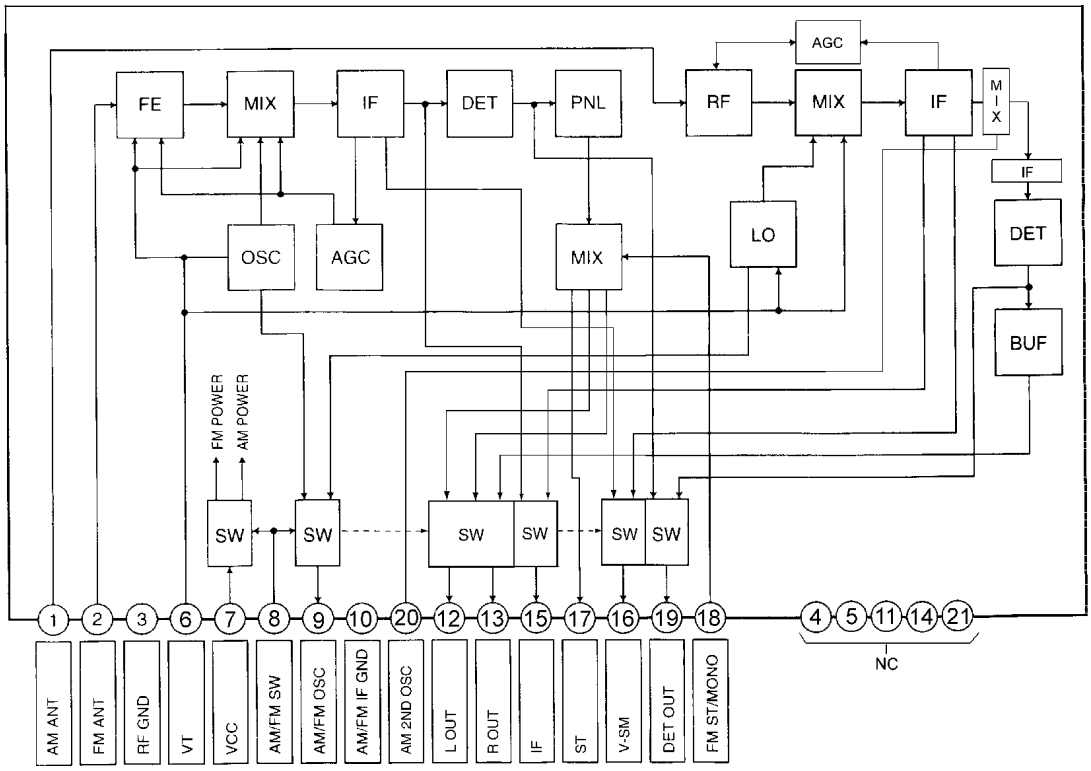

P50 : C5BA00000110

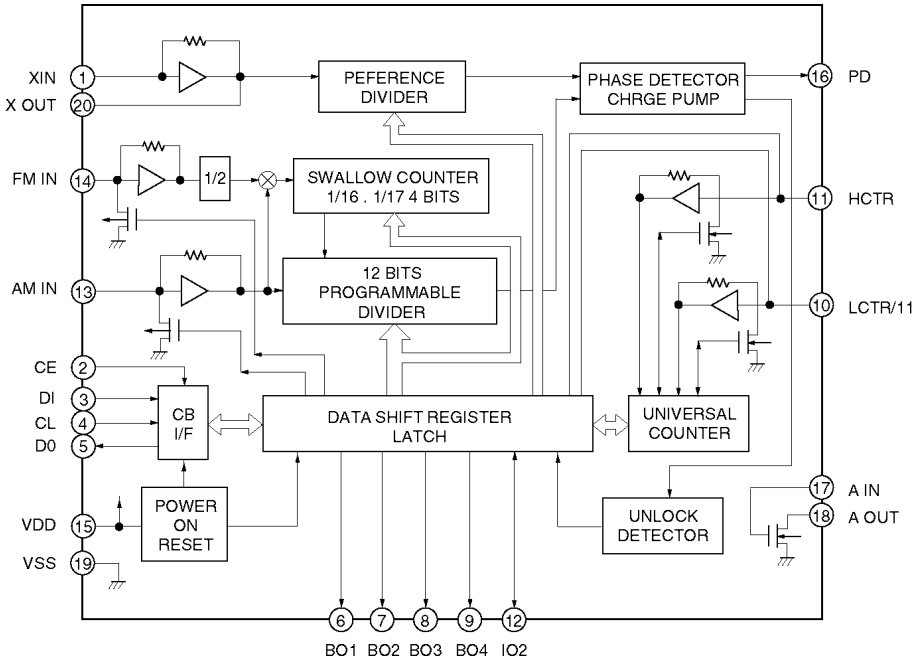

IC100 : YEAMLC72135M

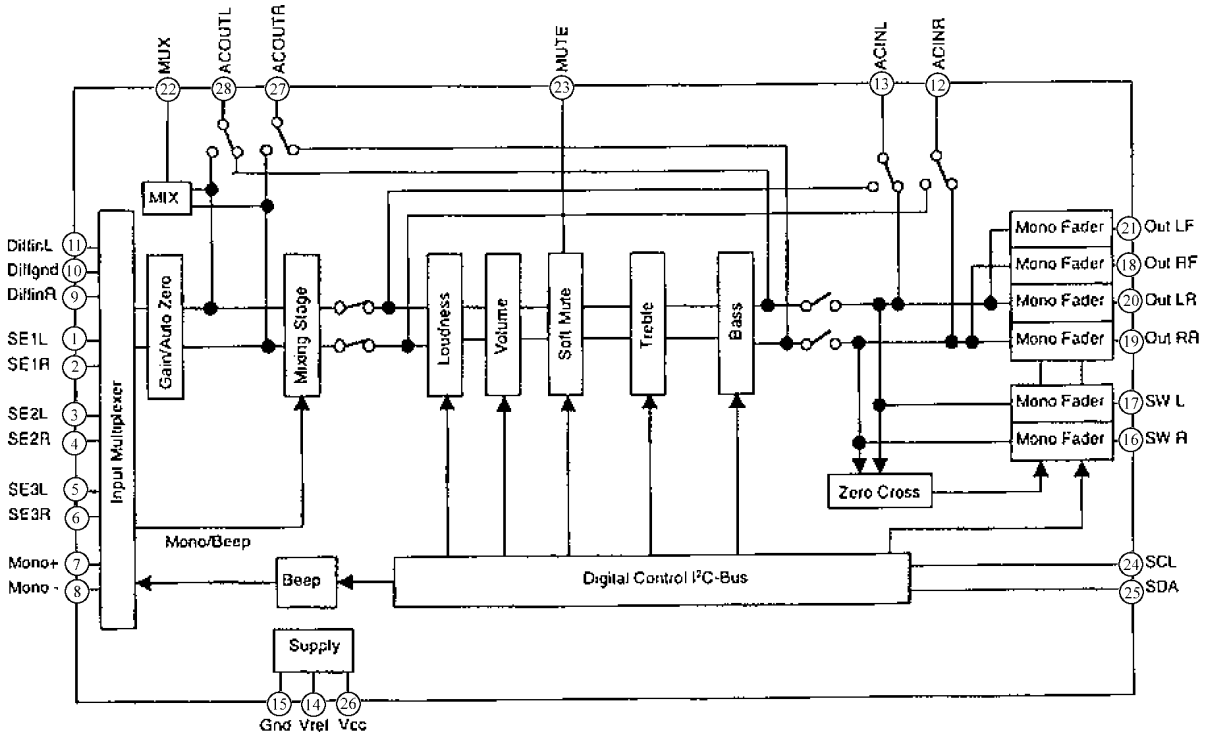

IC300 : C1BB00000543

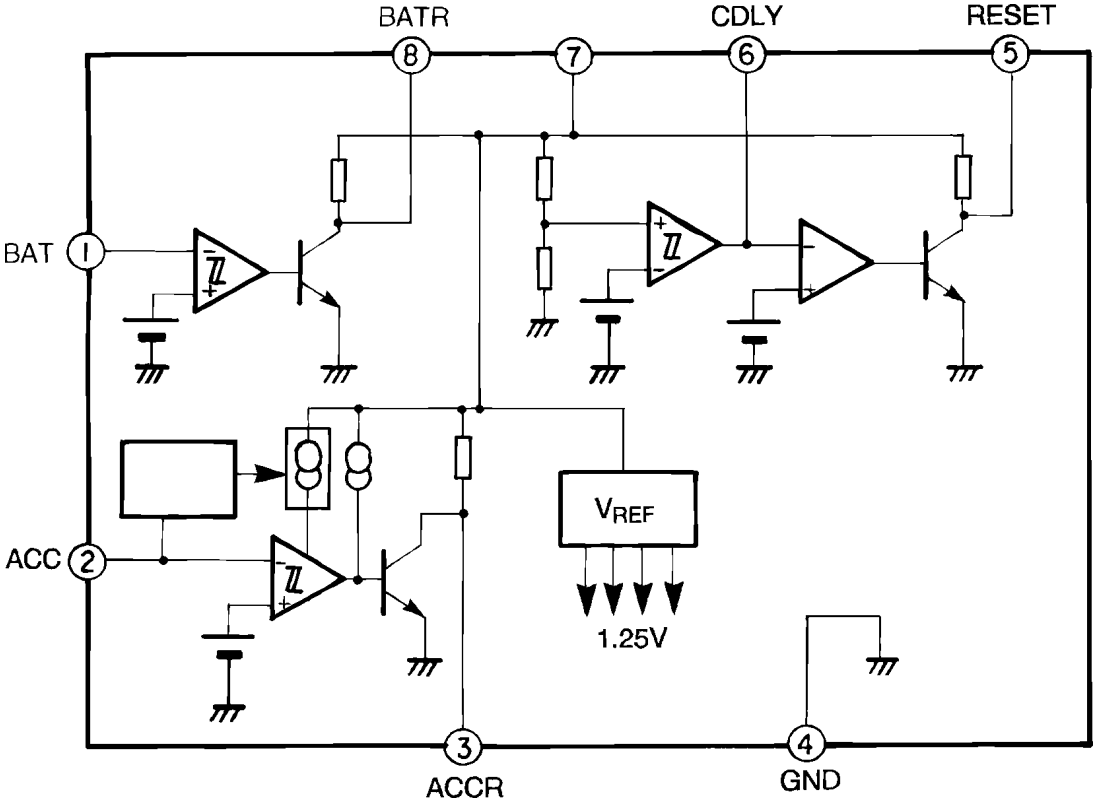

IC400 : AN8065S_E1

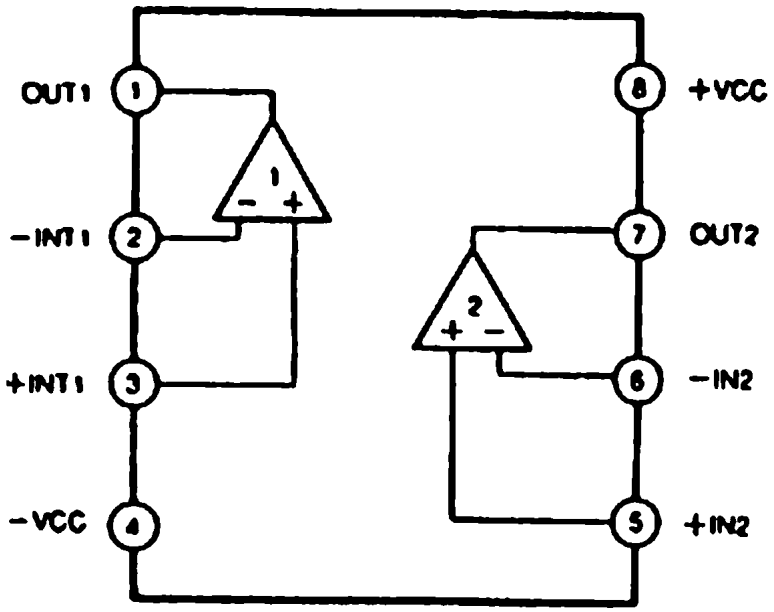

IC401 : AN6552S_E1

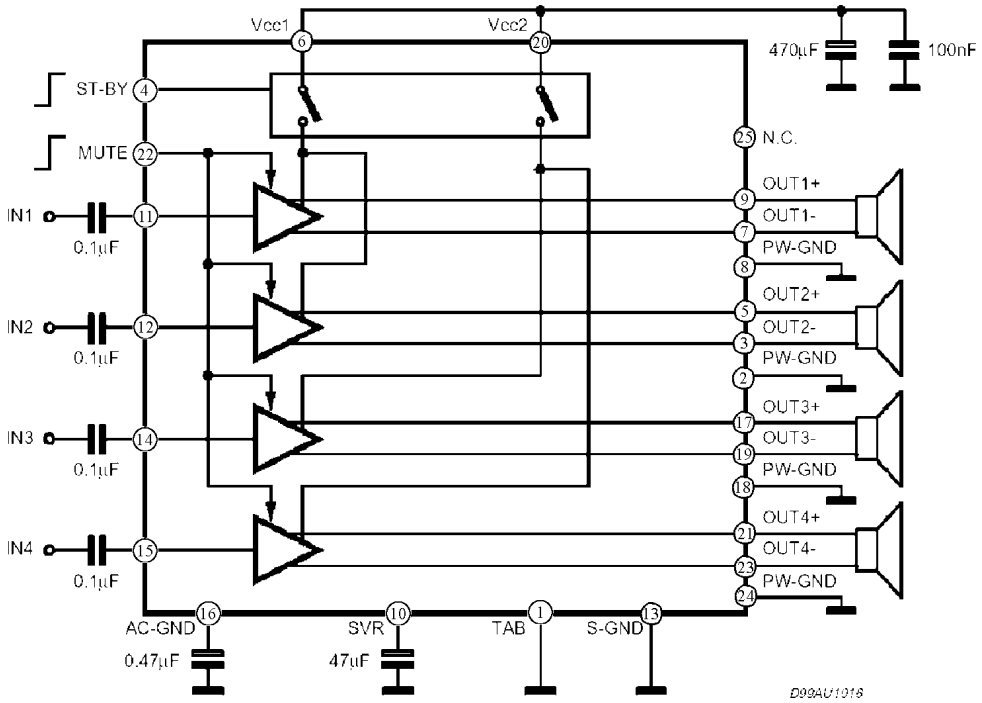

IC270 : C1EA00000026

12.2. Display Block

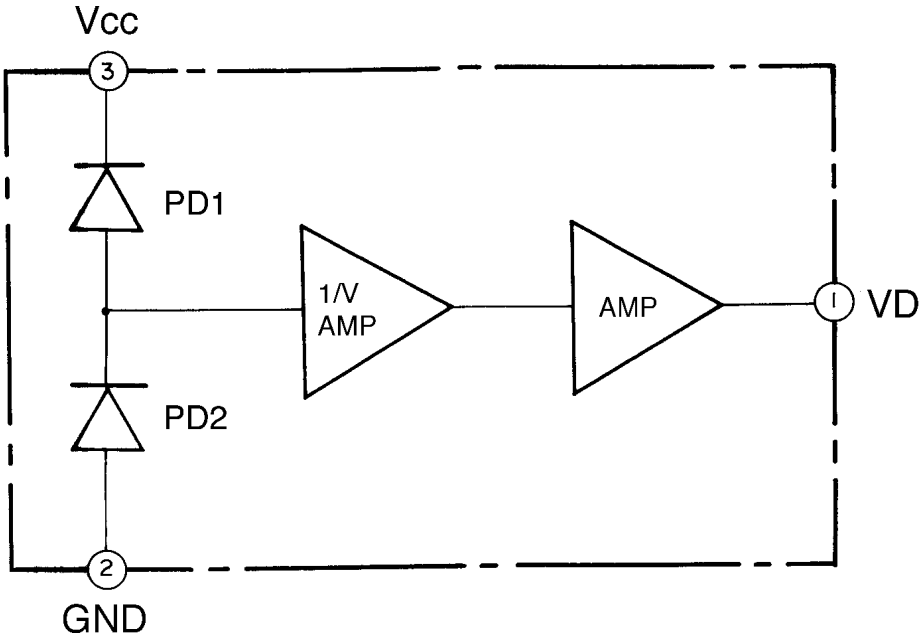

IC902 : PNA4602M01MC

12.3. CD Servo Block

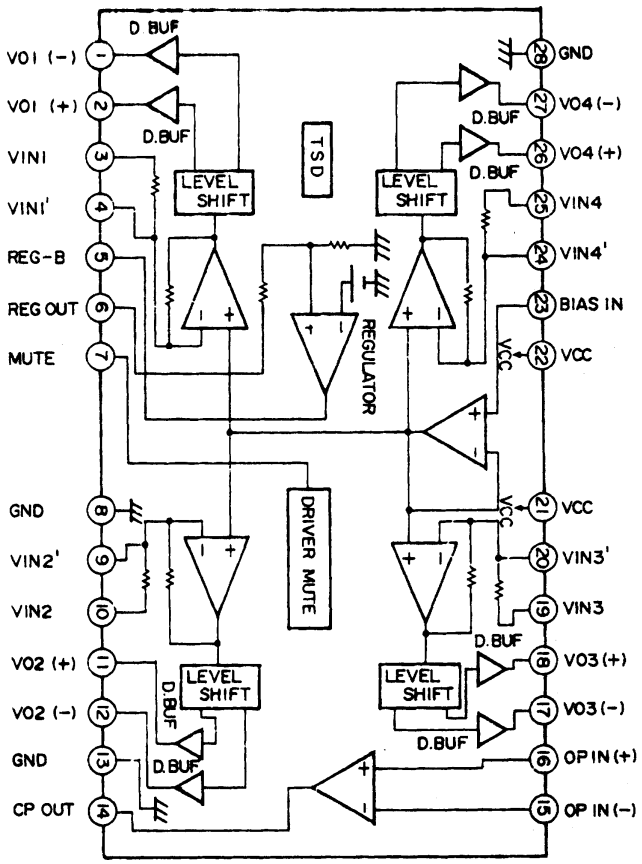

IC2 : C0GBY0000020

13 REPLACEMENT PARTS LIST

Note:

1. Be sure to make your orders of replacement parts according to this list.
2. Important safty notice: Component, indentified by ⚠ mark have special characteristics important for safety. when replacing any of these components, use only manufacturer's specified parts.
3. Location keys in the remarks column indicates the general location of the parts shown in the exploded drawing. as in a load map.
4. The marking (RTL) indicates that Retention Time is limited for this item. After the discontinuation of assembly in production, the item will continue to be availability is dependent on the type of assembly, and in accordance with the laws governing part and product retention. Aft the end of this period, the assembly will no longer be available.
5. "T" marks in remarks colum are indicated supply parts of TAMACO.

▪ Order intake period is basically six months after the first shipment

Ref. No.	Part No.	Part Name & Description	Remarks
1. IC's and Transistors			
MAIN BLOCK [E-4C238]			
IC100	YEAMLC72135M	IC	T
IC270	C1EA00000026	IC	T
IC300	C1BB00000543	IC	T
IC400	AN8065S-E1	IC	T
IC600	UPD784224113	IC	T
P50	C5BA00000110	Tuner	T
Q341	YEANDTC323TK	Transistor	T
Q342	YEANDTC323TK	Transistor	T
Q50	YEANA123YSAT	Transistor	T
Q51	YEANDTC144ST	Transistor	T
Q62	YEANDTA144ST	Transistor	T
Q630	YEANDTA144ST	Transistor	T
Q700	YEAND1762EF	Transistor	T
Q703	YEANKRC107M	Transistor	T
Q710	YEANB1243QRT	Transistor	T
Q720	YEANKRC107M	Transistor	T
Q730	YEAN2SD1020T	Transistor	T
Q740	YEAND1762EF	Transistor	T
Q750	YEAND1762EF	Transistor	T
Q800	YEAN2SD2007T	Transistor	T
Q801	YEAMKIA7808	Transistor	T
Q820	YEANB1243QRT	Transistor	T
Q830	YEANKRC107M	Transistor	T
Q840	YEANB1243QRT	Transistor	T
Q850	YEANKRC107M	Transistor	T
Q860	YEANB1243QRT	Transistor	T
Q870	YEANKRC107M	Transistor	T
Q880	C0CAAJG00005	Transistor	T
DISPLAY BLOCK [E-4C239]			
IC901	YEAMLC75853NW	IC	T
IC902	PNA4602M01MC	IC	T
Q901	YEANA114EKTX	Transistor	T
CD SERVO BLOCK [E-4C246]			
IC1	C1BB00000665	IC	T
IC2	C0GBY0000020	IC < for CQ-DP153(W.WJ) >	
Q1	YEAN2SB798T1	Transistor	T
2. Diodes			
MAIN BLOCK [E-4C238]			
D600	YEADRD56JS3T	Zener Diode	T
D601	YEADRD56JS3T	Zener Diode	T
D602	YEADRD56JS3T	Zener Diode	T
D603	YEADRD56JS3T	Zener Diode	T
D700	YEADMTZJ51CT	Zener Diode	T
D701	YEADRD56JS3T	Zener Diode	T
D702	YEADMTZJ91BT	Zener Diode	T
D703	YEAD1N4005ST	Silicon Diode	T
D704	YEAD1N4005ST	Silicon Diode	T
D706	YEADRD62JS3T	Zener Diode	T
D707	YEAD1A3T	Diode	T
D708	YEAD1N5404FT	Diode	T
D800	YEADMTZJ10CT	Zener Diode	T
D801	YEAD1A3T	Diode	T
D810	YEAD1S40T	Diode	T
D820	YEAD1N4005ST	Silicon Diode	T
D830	YEAD1N4005ST	Silicon Diode	T
D840	YEAD1N4005ST	Silicon Diode	T
D870	YEAD1N4005ST	Silicon Diode	T
D961	YEAD1N4005ST	Silicon Diode	T
D962	YEAD1N4005ST	Silicon Diode	T
D963	YEAD1N4005ST	Silicon Diode	T
D964	YEAD1N4005ST	Silicon Diode	T
D965	YEAD1N4005ST	Silicon Diode	T
D966	YEAD1N4005ST	Silicon Diode	T
D967	YEAD1N4005ST	Silicon Diode	T
D968	YEAD1N4005ST	Silicon Diode	T
D969	YEAD1N4148C	Diode	T
J20	YEAD1N4148C	Diode	T
J21	YEAD1A3T	Diode	T
Z51	YEADYP201M	Diode	T
DISPLAY BLOCK [E-4C239]			
D16	YEADRB501VT	Diode	T
D902	MA8056LMHTX	Diode	T
D903	MA8056LMHTX	Diode	T
D904	MA8056LMHTX	Diode	T
D905	MA8056LMHTX	Diode	T
D919	YEADSML310LT	LED(RED)	T
D921	YEADSML310LT	LED(RED)	T
D922	YEADSML310LT	LED(RED)	T
D923	YEADSML310LT	LED(RED)	T
D924	YEADSML310LT	LED(RED)	T
D925	YEADSML310LT	LED(RED)	T
D926	YEADSML310LT	LED(RED)	T
D927	YEADSML310LT	LED(RED)	T
D928	YEADSML310LT	LED(RED)	T
D929	YEADSML310LT	LED(RED)	T
D930	YEADSML310LT	LED(RED)	T
D931	YEADSML310LT	LED(RED)	T
D932	YEADSML310LT	LED(RED)	T
D933	YEADSML310LT	LED(RED)	T
D934	YEADSML310LT	LED(RED)	T
D935	YEADSML310LT	LED(RED)	T
D936	YEADSML310LT	LED(RED)	T
CD SERVO BLOCK [E-4C246]			
D1	YEAD1SS355T	Diode	T
3. Capacitors			
MAIN BLOCK [E-4C238]			
C100	ECUV1H220JCN	Ceramic 22pF 50WV	T
C101	ECUV1H220JCN	Ceramic 22pF 50WV	T
C102	ECEA0JKS101I	Electrolytic 100MFD 6.3WV	T
C103	ECUV1H103KBN	Ceramic 0.01MFD 50WV	T
C104	ECUV1H101KBN	Ceramic 100pF 50WV	T
C105	ECQV1H224JL2	Plastic Film 0.22MFD 50WV	T
C106	ECUV1H223KBN	Ceramic 0.022MFD 50WV	T
C107	ECUV1H103KBN	Ceramic 0.01MFD 50WV	T
C108	ECUV1H103KBN	Ceramic 0.01MFD 50WV	T
C109	ECUV1H103KBN	Ceramic 0.01MFD 50WV	T
C110	ECEA1AKS221I	Electrolytic 220MFD 10WV	T
C111	ECEA1AKS221I	Electrolytic 220MFD 10WV	T
C215	ECEA1CKS100I	Electrolytic 10MFD 16WV	T
C216	ECEA1HKS3R3I	Electrolytic 3.3MFD 50WV	T
C217	ECEA1HKS3R3I	Electrolytic 3.3MFD 50WV	T
C218	ECEA1HKS3R3I	Electrolytic 3.3MFD 50WV	T
C219	ECEA1HKS3R3I	Electrolytic 3.3MFD 50WV	T
C220	ECEA1HKS2R2I	Electrolytic 2.2MFD 50WV	T
C221	ECEA1HKS2R2I	Electrolytic 2.2MFD 50WV	T
C241	ECEA1HKS010I	Electrolytic 1MFD 50WV	T
C242	ECEA1HKS010I	Electrolytic 1MFD 50WV	T

Ref. No.	Part No.	Part Name & Description	Remarks
C249	ECUV1H222KBN	Ceramic 2200pF 50WV	T
C250	ECUV1H222KBN	Ceramic 2200pF 50WV	T
C280	ECUV1H121KBN	Ceramic 120pF 50WV	T
C281	ECUV1H121KBN	Ceramic 120pF 50WV	T
C282	ECUV1H121KBN	Ceramic 120pF 50WV	T
C283	ECUV1H121KBN	Ceramic 120pF 50WV	T
C290	ECEA1HKS3R3I	Electrolytic 3.3MFD 50WV	T
C291	ECEA1HKS3R3I	Electrolytic 3.3MFD 50WV	T
C294	ECEA1HKS3R3I	Electrolytic 3.3MFD 50WV	T
C295	ECEA1HKS3R3I	Electrolytic 3.3MFD 50WV	T
C341	ECEA1HKS010I	Electrolytic 1MFD 50WV	T
C342	ECEA1HKS010I	Electrolytic 1MFD 50WV	T
C349	ECUV1H222KBN	Ceramic 2200pF 50WV	T
C350	ECUV1H222KBN	Ceramic 2200pF 50WV	T
C380	ECEA1HKS2R2I	Electrolytic 2.2MFD 50WV	T
C400	ECUV1C474KBN	Chip 0.47MFD 16WV	T
C401	ECUV1H104KBN	Ceramic 0.1MFD 50WV	T
C50	ECUV1H103KBN	Ceramic 0.01MFD 50WV	T
C51	ECUV1H103KBN	Ceramic 0.01MFD 50WV	T
C52	ECEA1CKS470I	Electrolytic 47MFD 16WV	T
C53	ECUV1H103KBN	Ceramic 0.01MFD 50WV	T
C54	ECUV1H273KBN	Ceramic 0.027MFD 50WV	T
C55	ECUV1H273KBN	Ceramic 0.027MFD 50WV	T
C56	ECUV1H103KBN	Ceramic 0.01MFD 50WV	T
C57	ECUV1H102KBN	Ceramic 0.001MFD 50WV	T
C600	ECUV1H220JCN	Ceramic 22pF 50WV	T
C601	ECUV1H220JCN	Ceramic 22pF 50WV	T
C604	YEECFYH0H223	Electrolytic 22000MFD 5.5WV	T
C605	ECUV1C474KBN	Chip 0.47MFD 16WV	T
C606	ECEA0JKS331I	Electrolytic 330MFD 6.3WV	T
C607	ECEA0JKS331I	Electrolytic 330MFD 6.3WV	T
C630	ECEA0JKS331I	Electrolytic 330MFD 6.3WV	T
C631	ECEA1HKS0R1I	Electrolytic 0.1MFD 50WV	T
C641	ECUV1H220JCN	Ceramic 22pF 50WV	T
C642	ECUV1H220JCN	Ceramic 22pF 50WV	T
C669	ECEA1AKS221I	Electrolytic 220MFD 10WV	T
C701	ECEA0JKS101I	Electrolytic 100MFD 6.3WV	T
C703	ECEA1CKS100I	Electrolytic 10MFD 16WV	T
C704	ECEA1CKS101I	Electrolytic 100MFD 16WV	T
C705	ECEA1AKS221I	Electrolytic 220MFD 10WV	T
C706	ECEA1AKS221I	Electrolytic 220MFD 10WV	T
C707	ECEA1CKS101I	Electrolytic 100MFD 16WV	T
C708	ECEA1CKS100I	Electrolytic 10MFD 16WV	T
C709	ECEA1CKS101I	Electrolytic 100MFD 16WV	T
C718	ECUV1C474KBN	Chip 0.47MFD 16WV	T
C720	ECA1CDT332L	Electrolytic 3300MFD 16WV	T
C721	ECEA1HKS2R2I	Electrolytic 2.2MFD 50WV	T
C722	ECEA1CKS470I	Electrolytic 47MFD 16WV	T
C727	ECEA1CKS470I	Electrolytic 47MFD 16WV	T
C730	ECEA1HKS010I	Electrolytic 1MFD 50WV	T
C731	ECEA1HKS010I	Electrolytic 1MFD 50WV	T
C732	ECEA1HKS010I	Electrolytic 1MFD 50WV	T
C733	ECEA1HKS010I	Electrolytic 1MFD 50WV	T
C800	ECEA1CKS101I	Electrolytic 100MFD 16WV	T
C801	ECEA1AKS221I	Electrolytic 220MFD 10WV	T
C802	ECEA1AKS221I	Electrolytic 220MFD 10WV	T
C804	ECEA1AKS101I	Electrolytic 100MFD 10WV	T
C833	ECEA1AKS221I	Electrolytic 220MFD 10WV	T
C834	ECEA1AKS221I	Electrolytic 220MFD 10WV	T
C880	ECUV1H103KBM	Ceramic 0.01MFD 50WV	T
C881	ECUV1H101KBN	Ceramic 100pF 50WV	T
DISPLAY BLOCK [E-4C239]			
C901	ECUV1H104KBN	Ceramic 0.1MFD 50WV	T
C902	ECUV1H104KBN	Ceramic 0.1MFD 50WV	T
C903	ECUV1H821KBN	Ceramic 820PF 50WV	T
C904	ECUV1H104KBN	Ceramic 0.1MFD 50WV	T
CD SERVO BLOCK [E-4C246]			
C3	ECUV1H080DCV	Chip 8PF 50WV	T
C4	ECUV1H270JCV	Ceramic 27PF 50WV	T
C5	ECUV1H040DCV	Chip 4PF 50WV	T
C6	ECUV1H104KBV	Ceramic 0.1MFD 50WV	T
C7	ECUV1H104KBV	Ceramic 0.1MFD 50WV	T
C8	ECUV1H472KBV	Ceramic 4700pF 50WV	T

Ref. No.	Part No.	Part Name & Description	Remarks
C9	ECUV1H104KBV	Ceramic 0.1MFD 50WV	T
C10	ECUV1H104KBV	Ceramic 0.1MFD 50WV	T
C11	ECUV1H104KBV	Ceramic 0.1MFD 50WV	T
C12	ECUV1H104KBV	Ceramic 0.1MFD 50WV	T
C13	ECUV1H104KBV	Ceramic 0.1MFD 50WV	T
C14	ECUV1H104KBV	Ceramic 0.1MFD 50WV	T
C15	ECUV1H104KBV	Ceramic 0.1MFD 50WV	T
C16	ECUV1H104KBV	Ceramic 0.1MFD 50WV	T
C17	ECUV1H103KBV	Ceramic 0.01MFD 50WV	T
C18	ECUV1H103KBV	Ceramic 0.01MFD 50WV	T
C21	ECEA1CKS100I	Electrolytic 10MFD 16WV	T
C24	ECUV1H270JCV	Ceramic 27PF 50WV	T
C25	ECUV1H560JCV	Ceramic 56PF 50WV	T
C26	ECUV1H270JCV	Ceramic 27PF 50WV	T
C27	ECEA1CKS100I	Electrolytic 10MFD 16WV	T
C28	ECUV1C223KBV	Ceramic 0.022MFD 16WV	T
C29	ECUV1H104KBV	Ceramic 0.1MFD 50WV	T
C30	ECEA1CKS100I	Electrolytic 10MFD 16WV	T
C31	ECEA1AKS101I	Electrolytic 100MFD 10WV	T
C32	ECEA1CKS100I	Electrolytic 10MFD 16WV	T
C33	ECEA1CKS100I	Electrolytic 10MFD 16WV	T
C37	ECUV1H102KBV	Ceramic 0.001MFD 50WV	T
4. Resistors			
MAIN BLOCK [E-4C238]			
J120	ERD25TJ181T	Carbon 180 ohms 1/4W	T
J121	ERD25TJ181T	Carbon 180 ohms 1/4W	T
J123	ERD25TJ181T	Carbon 180 ohms 1/4W	T
J124	ERD25TJ181T	Carbon 180 ohms 1/4W	T
J200	ERJ6GEYJ473V	Chip 47k ohms 1/10W	T
J204	ERJ6GEY0R00V	Chip 0 ohms 1/10W	T
J206	ERJ8GX0R00V	Chip 0 ohms 1/8W	T
J207	ERJ6GEY0R00V	Chip 0 ohms 1/10W	T
J209	ERJ6GEY0R00V	Chip 0 ohms 1/10W	T
J210	ERJ6GEY0R00V	Chip 0 ohms 1/10W	T
J211	ERJ6GEY0R00V	Chip 0 ohms 1/10W	T
J213	ERJ6GEY0R00V	Chip 0 ohms 1/10W	T
J216	ERJ8GX0R00V	Chip 0 ohms 1/8W	T
J217	ERJ6GEY0R00V	Chip 0 ohms 1/10W	T
J300	ERJ8GX0R00V	Chip 0 ohms 1/8W	T
J301	ERJ8GX0R00V	Chip 0 ohms 1/8W	T
J302	ERJ8GX0R00V	Chip 0 ohms 1/8W	T
J303	ERJ8GX0R00V	Chip 0 ohms 1/8W	T
J304	ERJ8GX0R00V	Chip 0 ohms 1/8W	T
J307	ERJ8GX0R00V	Chip 0 ohms 1/8W	T
J308	ERJ8GX0R00V	Chip 0 ohms 1/8W	T
J309	ERJ8GX0R00V	Chip 0 ohms 1/8W	T
J310	ERJ8GX0R00V	Chip 0 ohms 1/8W	T
J311	ERJ8GX0R00V	Chip 0 ohms 1/8W	T
J312	ERJ8GX0R00V	Chip 0 ohms 1/8W	T
J313	ERJ8GX0R00V	Chip 0 ohms 1/8W	T
J314	ERJ8GX0R00V	Chip 0 ohms 1/8W	T
J315	ERJ8GX0R00V	Chip 0 ohms 1/8W	T
J316	ERJ8GX0R00V	Chip 0 ohms 1/8W	T
J317	ERJ8GX0R00V	Chip 0 ohms 1/8W	T
J318	ERJ8GX0R00V	Chip 0 ohms 1/8W	T
J319	ERJ8GX0R00V	Chip 0 ohms 1/8W	T
J320	ERJ8GX0R00V	Chip 0 ohms 1/8W	T
J321	ERJ8GX0R00V	Chip 0 ohms 1/8W	T
J322	ERJ8GX0R00V	Chip 0 ohms 1/8W	T
J325	ERJ8GX0R00V	Chip 0 ohms 1/8W	T
J326	ERJ8GX0R00V	Chip 0 ohms 1/8W	T
J329	ERJ8GX0R00V	Chip 0 ohms 1/8W	T
J330	ERJ8GEYJ223V	Chip 22k ohms 1/8W	T
J331	ERJ8GX0R00V	Chip 0 ohms 1/8W	T
J332	ERJ8GX0R00V	Chip 0 ohms 1/8W	T
J333	ERJ8GX0R00V	Chip 0 ohms 1/8W	T
J334	ERJ8GX0R00V	Chip 0 ohms 1/8W	T
J335	ERJ8GX0R00V	Chip 0 ohms 1/8W	T
J336	ERJ8GX0R00V	Chip 0 ohms 1/8W	T
J336	ERJ8GX0R00V	Chip 0 ohms 1/8W	T
J337	ERJ8GX0R00V	Chip 0 ohms 1/8W	T
J338	ERJ8GX0R00V	Chip 0 ohms 1/8W	T
J339	ERJ8GX0R00V	Chip 0 ohms 1/8W	T

Ref. No.	Part No.	Part Name & Description	Remarks
J340	ERJ6GEY0R00V	Chip 0 ohms 1/10W	T
J342	ERDS2TJ102T	Carbon 1k ohms 1/4W	T
J343	ERDS2TJ102T	Carbon 1k ohms 1/4W	T
J344	ERJ8GX0R00V	Chip 0 ohms 1/8W	T
J347	ERJ8GX0R00V	Chip 0 ohms 1/8W	T
J348	ERJ8GX0R00V	Chip 0 ohms 1/8W	T
J349	ERJ8GX0R00V	Chip 0 ohms 1/8W	T
J351	ERJ8GX0R00V	Chip 0 ohms 1/8W	T
J353	ERJ6GEY0R00V	Chip 0 ohms 1/10W	T
J354	ERJ8GX0R00V	Chip 0 ohms 1/8W	T
J357	ERJ8GX0R00V	Chip 0 ohms 1/8W	T
J358	ERJ8GX0R00V	Chip 0 ohms 1/8W	T
J363	ERJ8GX0R00V	Chip 0 ohms 1/8W	T
J364	ERJ8GX0R00V	Chip 0 ohms 1/8W	T
J365	ERJ8GX0R00V	Chip 0 ohms 1/8W	T
J373	ERJ8GX0R00V	Chip 0 ohms 1/8W	T
J375	ERJ8GX0R00V	Chip 0 ohms 1/8W	T
J376	ERJ8GX0R00V	Chip 0 ohms 1/8W	T
J378	ERJ8GX0R00V	Chip 0 ohms 1/8W	T
J379	ERJ8GX0R00V	Chip 0 ohms 1/8W	T
J380	ERJ8GX0R00V	Chip 0 ohms 1/8W	T
J381	ERJ8GX0R00V	Chip 0 ohms 1/8W	T
J39	ERDS2TJ154T	Carbon 150k ohms 1/4W	T
J400	ERJ6GEYJ331V	Chip 330 ohms 1/10W	T
J405	ERJ8GX0R00V	Chip 0 ohms 1/8W	T
J406	ERJ8GX0R00V	Chip 0 ohms 1/8W	T
J407	ERJ8GX0R00V	Chip 0 ohms 1/8W	T
J408	ERJ8GX0R00V	Chip 0 ohms 1/8W	T
J409	ERJ8GX0R00V	Chip 0 ohms 1/8W	T
J436	ERJ8GX0R00V	Chip 0 ohms 1/8W	T
J450	ERJ8GX0R00V	Chip 0 ohms 1/8W	T
J451	ERJ8GX0R00V	Chip 0 ohms 1/8W	T
J500	ERJ6GEY0R00V	Chip 0 ohms 1/10W	T
J525	ERJ8GX0R00V	Chip 0 ohms 1/8W	T
J56	ERJ6GEY0R00V	Chip 0 ohms 1/10W	T
J602	ERJ6GEY0R00V	Chip 0 ohms 1/10W	T
J603	ERJ6GEY0R00V	Chip 0 ohms 1/10W	T
J613	ERJ8GEYJ473V	Chip 47k ohms 1/8W	T
J614	ERJ8GEYJ473V	Chip 47k ohms 1/8W	T
J888	ERJ6GEY0R00V	Chip 0 ohms 1/10W	T
R102	ERJ6GEYJ152V	Chip 1.5k ohms 1/10W	T
R103	ERJ6GEYJ182V	Chip 1.8k ohms 1/10W	T
R104	ERDS2TJ561T	Carbon 560 ohms 1/4W	T
R105	ERJ6GEYJ100V	Chip 10 ohms 1/10W	T
R106	ERJ6GEYJ222V	Chip 2.2k ohms 1/10W	T
R107	ERJ8GEYJ102V	Chip 1k ohms 1/8W	T
R108	ERJ8GEYJ102V	Chip 1k ohms 1/8W	T
R109	ERJ8GEYJ102V	Chip 1k ohms 1/8W	T
R110	ERJ8GEYJ102V	Chip 1k ohms 1/8W	T
R111	ERJ6GEYJ473V	Chip 47k ohms 1/10W	T
R208	ERJ8GX0R00V	Chip 0 ohms 1/8W	T
R209	ERJ8GX0R00V	Chip 0 ohms 1/8W	T
R271	ERD25TJ561T	Carbon 560 ohms 1/4W	T
R272	ERD25TJ561T	Carbon 560 ohms 1/4W	T
R280	ERJ6GEYJ472V	Chip 4.7k ohms 1/10W	T
R283	ERJ6GEYJ472V	Chip 4.7k ohms 1/10W	T
R284	ERJ6GEYJ472V	Chip 4.7k ohms 1/10W	T
R285	ERJ6GEYJ472V	Chip 4.7k ohms 1/10W	T
R341	ERJ6GEYJ103V	Chip 10k ohms 1/10W	T
R342	ERJ6GEYJ103V	Chip 10k ohms 1/10W	T
R363	ERJ6GEY0R00V	Chip 0 ohms 1/10W	T
R364	ERJ6GEY0R00V	Chip 0 ohms 1/10W	T
R371	ERD25TJ561T	Carbon 560 ohms 1/4W	T
R372	ERD25TJ561T	Carbon 560 ohms 1/4W	T
R400	ERJ6GEYJ393V	Chip 39k ohms 1/10W	T
R401	ERJ8GEYJ274V	Chip 270k ohms 1/8w	T
R403	ERJ6GEYJ103V	Chip 10k ohms 1/10W	T
R50	ERJ6GEYJ5R6V	Chip 5.6 ohms 1/10W	T
R52	ERJ6GEYJ101V	Chip 100 ohms 1/10W	T
R53	ERJ6GEYJ822V	Chip 8.2k ohms 1/10W	T
R54	ERJ6GEYJ333V	Chip 33k ohms 1/10W	T
R55	ERJ6GEYJ102V	Chip 1k ohms 1/10W	T
R56	ERJ6GEYJ153V	Chip 15k ohms 1/10W	T

Ref. No.	Part No.	Part Name & Description	Remarks
R57	ERJ6GEYJ333V	Chip 33k ohms 1/10W	T
R58	ERJ6GEYJ333V	Chip 33k ohms 1/10W	T
R600	ERJ6GEYJ473V	Chip 47k ohms 1/10W	T
R604	ERJ6GEYJ472V	Chip 4.7k ohms 1/10W	T
R605	ERJ6GEYJ334V	Chip 330k ohms 1/10W	T
R606	ERJ6GEYJ104V	Chip 100k ohms 1/10W	T
R607	ERJ8GEYJ102V	Chip 1k ohms 1/8W	T
R609	ERJ6GEYJ102V	Chip 1k ohms 1/10W	T
R610	ERJ6GEYJ102V	Chip 1k ohms 1/10W	T
R611	ERJ6GEYJ102V	Chip 1k ohms 1/10W	T
R613	ERJ6GEYJ102V	Chip 1k ohms 1/10W	T
R618	ERJ8GEYJ102V	Chip 1k ohms 1/8W	T
R620	ERJ8GEYJ103V	Carbon 10k ohms 1/8W	T
R621	ERJ8GEYJ103V	Carbon 10k ohms 1/8W	T
R630	ERJ6GEYJ102V	Chip 1k ohms 1/10W	T
R631	ERJ6GEYJ104V	Chip 100k ohms 1/10W	T
R632	ERJ8GEYJ104V	Chip 100k ohms 1/8W	T
R634	ERJ6GEYJ332V	Chip 3.3k ohms 1/10W	T
R635	ERJ8GEYJ102V	Chip 1k ohms 1/8W	T
R636	ERJ8GX0R00V	Chip 0 ohms 1/8W	T
R638	ERJ6GEYJ472V	Chip 4.7k ohms 1/10W	T
R661	ERJ6GEYJ102V	Chip 1k ohms 1/10W	T
R662	ERJ8GEYJ104V	Chip 100k ohms 1/8W	T
R663	ERJ8GEYJ104V	Chip 100k ohms 1/8W	T
R666	ERJ6GEYJ473V	Chip 47k ohms 1/10W	T
R668	ERJ6GEYJ473V	Chip 47k ohms 1/10W	T
R669	ERJ6GEYJ473V	Chip 47k ohms 1/10W	T
R670	ERJ6GEYJ473V	Chip 47k ohms 1/10W	T
R678	ERJ6GEYJ223V	Chip 22k ohms 1/10W	T
R700	ERD25FJ1R0T	Carbon 1 ohms 1/4W	T
R701	ERD25TJ152T	Carbon 1.5k ohms 1/4W	T
R702	ERJ8GEYJ331V	Chip 330 ohms 1/8w	T
R703	ERD25FJ1R0T	Carbon 1 ohms 1/4W	T
R704	ERD25FJ5R6T	Carbon 5.6 ohms 1/4W	T
R705	ERD25TJ221T	Carbon 220 ohms 1/4W	T
R706	ERDS1FJ821T	Carbon 820 ohms 1/2W	T
R707	ERDS1FJ821T	Carbon 820 ohms 1/2W	T
R708	ERJ8GEYJ473V	Chip 47k ohms 1/8W	T
R709	ERJ8GEYJ100V	Chip 10 ohms 1/8W	T
R710	ERJ8GEYJ752V	Chip 7.5k ohms 1/8W	T
R737	ERJ6GEYJ273V	Chip 27k ohms 1/10W	T
R776	ERJ8GX0R00V	Chip 0 ohms 1/8W	T
R777	ERJ6GEY0R00V	Chip 0 ohms 1/10W	T
R778	ERJ8GX0R00V	Chip 0 ohms 1/8W	T
R780	ERJ6GEY0R00V	Chip 0 ohms 1/10W	T
R783	ERJ6GEYJ473V	Chip 47k ohms 1/10W	T
R784	ERJ6GEYJ473V	Chip 47k ohms 1/10W	T
R785	ERJ6GEYJ473V	Chip 47k ohms 1/10W	T
R800	ERD25FJ1R0T	Carbon 1 ohms 1/4W	T
R801	ERD25TJ221T	Carbon 220 ohms 1/4W	T
R820	ERJ8GEYJ102V	Chip 1k ohms 1/8W	T
R821	ERJ6GEYJ473V	Chip 47k ohms 1/10W	T
R841	ERJ6GEYJ472V	Chip 4.7k ohms 1/10W	T
R850	ERJ6GEYJ562V	Chip 5.6k ohms 1/10W	T
R860	ERJ6GEYJ562V	Chip 5.6k ohms 1/10W	T
R861	ERJ6GEYJ472V	Chip 4.7k ohms 1/10W	T
R971	ERJ6GEYJ103V	Chip 10k ohms 1/10W	T
R972	ERJ6GEYJ102V	Chip 1k ohms 1/10W	T
DISPLAY BLOCK [E-4C239]			
R902	ERJ6GEYJ473V	Chip 47k ohms 1/10W	T
R903	ERJ6GEYJ102V	Chip 1k ohms 1/10W	T
R904	ERJ6GEYJ102V	Chip 1k ohms 1/10W	T
R905	ERJ6GEYJ102V	Chip 1k ohms 1/10W	T
R908	ERJ6GEYJ681V	Chip 680 ohms 1/10W	T
R909	ERJ6GEYJ102V	Chip 1k ohms 1/10W	T
R910	ERJ6GEYJ472V	Chip 4.7k ohms 1/10W	T
R911	ERJ6GEYJ102V	Chip 1k ohms 1/10W	T
R921	ERJ6GEYJ221V	Chip 220 ohms 1/10W	T
R922	ERJ6GEYJ221V	Chip 220 ohms 1/10W	T
R923	ERJ6GEYJ221V	Chip 220 ohms 1/10W	T
R925	ERJ6GEYJ221V	Chip 220 ohms 1/10W	T
R926	ERJ6GEYJ681V	Chip 680 ohms 1/10W	T
R927	ERJ6GEYJ221V	Chip 220 ohms 1/10W	T

Ref. No.	Part No.	Part Name & Description	Remarks
R980	ERJ6GEYJ4R7V	Chip 4.7 ohms 1/10W	T
R981	ERJ6GEYJ102V	Chip 1k ohms 1/10W	T
R982	ERJ6GEYJ103V	Chip 10k ohms 1/10W	T
R990	ERJ6GEYJ181V	Chip 180 ohms 1/10W	T
CD SERVO BLOCK [E-4C246]			
J504	ERJ8GEY0R00V	Chip 0 ohms 1/8W	T
J505	ERJ8GEY0R00V	Chip 0 ohms 1/8W	T
J518	ERJ3GEY0R00V	Chip 0 ohms 1/16W	T
J519	ERJ6GEY0R00V	Chip 0 ohms 1/10W	T
J520	ERJ8GEY0R00V	Chip 0 ohms 1/8W	T
J521	ERJ3GEY0R00V	Chip 0 ohms 1/16W	T
J535	ERJ8GEY0R00V	Chip 0 ohms 1/8W	T
J536	ERJ8GEY0R00V	Chip 0 ohms 1/8W	T
J537	ERJ8GEY0R00V	Chip 0 ohms 1/8W	T
J538	ERJ3GEY0R00V	Chip 0 ohms 1/16W	T
J539	ERJ6GEY0R00V	Chip 0 ohms 1/10W	T
J540	ERJ8GEY0R00V	Chip 0 ohms 1/8W	T
J541	ERJ6GEY0R00V	Chip 0 ohms 1/10W	T
J542	ERJ3GEY0R00V	Chip 0 ohms 1/16W	T
J543	ERJ6GEY0R00V	Chip 0 ohms 1/10W	T
J544	ERJ3GEY0R00V	Chip 0 ohms 1/16W	T
J545	ERJ8GEY0R00V	Chip 0 ohms 1/8W	T
J546	ERJ3GEY0R00V	Chip 0 ohms 1/16W	T
J547	ERJ3GEY0R00V	Chip 0 ohms 1/16W	T
J554	ERJ3GEY0R00V	Chip 0 ohms 1/16W	T
J558	ERJ6GEY0R00V	Chip 0 ohms 1/10W	T
J560	ERJ8GEY0R00V	Chip 0 ohms 1/8W	T
J601	ERJ8GEY0R00V	Chip 0 ohms 1/8W	T
J603	ERJ8GEY0R00V	Chip 0 ohms 1/8W	T
J604	ERJ6GEY0R00V	Chip 0 ohms 1/10W	T
J605	ERJ8GEY0R00V	Chip 0 ohms 1/8W	T
J606	ERJ6GEY0R00V	Chip 0 ohms 1/10W	T
J607	ERJ6GEY0R00V	Chip 0 ohms 1/10W	T
J608	ERJ8GX0R00V	Chip 0 ohms 1/8W	T
J609	ERJ8GX0R00V	Chip 0 ohms 1/8W	T
J610	ERJ8GEY0R00V	Chip 0 ohms 1/8W	T
J611	ERJ8GEY0R00V	Chip 0 ohms 1/8W	T
J612	ERJ6GEY0R00V	Chip 0 ohms 1/10W	T
J613	ERJ6GEY0R00V	Chip 0 ohms 1/10W	T
R1	ERJ3GEYJ103V	Chip 10k ohms 1/16W	T
R2	ERJ3GEYJ103V	Chip 10k ohms 1/16W	T
R3	ERJ3GEYJ222V	Chip 2.2k ohms 1/16W	T
R4	ERJ3GEYJ392V	Chip 3.9k ohms 1/16W	T
R5	ERJ3GEYJ392V	Chip 3.9k ohms 1/16W	T
R6	ERJ3GEYJ392V	Chip 3.9k ohms 1/16W	T
R7	ERJ3GEYJ103V	Chip 10k ohms 1/16W	T
R8	ERJ3GEYJ473V	Chip 47k ohms 1/16W	T
R13	ERJ3GEYJ393V	Chip 3.9k ohms 1/16W	T
R14	ERJ3GEYJ104V	Chip 100k ohms 1/16W	T
R15	ERJ3GEYJ184V	Chip 180k ohms 1/16W	T
R16	ERJ3GEYJ220V	Chip 22 ohms 1/16W	T
R17	ERJ3GEY0R00V	Chip 0 ohms 1/16W	T
R18	ERJ6GEY0R00V	Chip 0 ohms 1/10W	T
R19	ERJ8GEY0R00V	Chip 0 ohms 1/8W	T
R20	ERJ3GEYJ104V	Chip 100k ohms 1/16W	T
R21	ERJ3GEYJ472V	Chip 4.7k ohms 1/16W	T
R24	ERJ8GEY0R00V	Chip 0 ohms 1/8W	T
R25	ERJ3GEYJ102V	Chip 1k ohms 1/16W	T
R26	ERJ3GEYJ102V	Chip 1k ohms 1/16W	T
R27	ERJ3GEYJ102V	Chip 1k ohms 1/16W	T
R28	ERJ3GEYJ102V	Chip 1k ohms 1/16W	T
R29	ERJ3GEYJ102V	Chip 1k ohms 1/16W	T
R30	ERJ3GEYJ102V	Chip 1k ohms 1/16W	T
R31	ERJ3GEYJ102V	Chip 1k ohms 1/16W	T
R32	ERJ3GEYJ102V	Chip 1k ohms 1/16W	T
5. Connectors			
MAIN BLOCK [E-4C238]			
CN601	YEAE012475	Connect	T
CN700	K1FA116B0028	Connect	T
CN701	K1KA22A00001	Connect	T
CN900	K2HA102B0061	Connect	T
DISPLAY BLOCK [E-4C239]			
CN901	YEAE012476	Connect	T

Ref. No.	Part No.	Part Name & Description	Remarks
CD SERVO BLOCK [E-4C246]			
CN1	K1KB22A00001	Connector	T
CN2	K1MN16B00036	Connector	T
CN3	K1KA04B00007	Connector	T
CN4	K1KA02B00051	Connector	T
CN5	K1KA03B00006	Connector	T
6. Electric Parts			
SWITCHES			
SW901	K0H1BA000445	Tack Swich	T
SW902	K0H1BA000445	Tack Swich	T
SW903	K0H1BA000445	Tack Swich	T
SW904	K0H1BA000445	Tack Swich	T
SW905	K0H1BA000445	Tack Swich	T
SW906	K0H1BA000445	Tack Swich	T
SW907	K0H1BA000445	Tack Swich	T
SW908	K0H1BA000445	Tack Swich	T
SW909	K0H1BA000445	Tack Swich	T
SW910	K0H1BA000445	Tack Swich	T
SW911	K0H1BA000445	Tack Swich	T
SW912	K0H1BA000445	Tack Swich	T
SW913	K0H1BA000445	Tack Swich	T
SW914	K0H1BA000445	Tack Swich	T
SW915	K0H1BA000445	Tack Swich	T
SW921	K0H1BA000445	Tack Swich	T
CRYSTAL			
XL100	YEXL4C720TT	Crystal (7.2MHz)	T
XL600	YEXL4C12M5T	Crystal (12.5mhz)	T
XL601	YEXL4C32768T	Crystal (32.768KHz)	T
XL1	H2D169500017	Crystal (16.934mhz)	T
COILS			
L100	YELT02C101KT	Axial Coil	T
L50	YELT02C330KT	Axial Coil	T
L60	YELTR56MT	Coil	T
L700	YETQ024C055V	Choke Coil	T
L1	YELTB101MT	Coil	T
VR			
VR901	K9AA024A0007	ENCODE VR	T
LCD			
LCD901	YEXDCM4C099	LCD	T
LAMPS			
PL901	B3AFB0000039	LED WHITE(LWA67C)	T
PL902	B3AFB0000039	LED WHITE(LWA67C)	T
POSISTOR			
PT700	YERT7AR4R7MT	Posistor	T
7. Accessories			
PRINTING			
CQ-DP153W	YFM284C373ZA	Operating Instructions	T
CQ-DP153WJ	YFM284C391ZA	Operating Instructions	T
CQ-DP143WJ	YFM284C389ZA	Operating Instructions	T
INSTALLATION PARTS			
	YFC054C061ZA	Removable Front Panel Case	T
	YEAJ02877	Power Connector	T
	YFG044C002ZA	Rear Support Strap	T
	ZZBISDP103U	Screw Kit	T
	FX0214C316ZA	Mounting Collar	T
8. Mechanical Parts			
MISCELLANEOUS			
ANT1	YAA104C700ZA	ANT JACK	T(2-C)
1	YJT034C035ZA	Screw	T(3-C)
2	YFA034C044ZA	Upper Cover	T(4-C)
3	YFC024C593ZA	Esc Holder (cd)	T(2-B)
4	YFE134C440ZA	Push Button	T(2-B)
5	FX0054C058ZA	Spring (push button)	T(2-B)
6	YEFX9991682A	Release Hook	T(2-B)
7	YEFX0052056	Spring< for CQ-DP153W >	T(2-B)
	FX0054C049ZA	Spring< for CQ-DP153WJ/DP143WJ >	
8	YJT034C015ZA	Step Screw< for CQ-DP153W >	T(2-B)
	YJT034C015CA	Step Screw< for CQ-DP153WJ/DP143WJ >	

Ref. No.	Part No.	Part Name & Description	Remarks
9	YFC054C057ZA	Trim Plate(print)< for CQ-DP143WJ >	T(1-A)
	YFC054C058ZA	Trim Plate(print) < for CQ-DP153(W.WJ) >	
10	YFX054C051ZA	Spring Plate(R)	T(2-C)
11	YFX054C052ZA	Spring Plate(L)	T(3-B)
12	XTB3+6FFXS	Screw	T(2-C) T(3-B)
13	YFA054C036ZA	Bottom Cover	T(1-C)
14	YFA084C038ZA	Rear Plate	T(3-C)
15	YFA074C045ZA	Front Plate	T(2-B)
16	YFA094C091ZA	Right Plate	T(2-C)
17	YFF014C047ZA	Heat Sink	T(3-B)
18	YEJT034C001	Screw	T(2-B) T(2-C)
19	XTB3+6FFXS	Screw	T(2-C) T(3-B)
20	YEJT034C019	Screw(cup tight 3x12)	T(3-B)
21	XTW3+8C	Screw	T(3-C)
22	FX0214C320ZA	RCA Jack Bracket	T(3-C)
24	FX0214C322ZA	Tr Bkt	T(2-B)
25	FX0214C172WA	IC Bracket< for CQ-DP153W >	T(2-B)
	FX0214C276ZA	IC Bracket< for CQ-DP153WJ/DP143WJ >	
27	YFJ014C095ZA	Ornament Panel(print)< for CQ-DP153(W.WJ) >	T(1-A)
	YFJ014C100ZA	Ornament Panel(print) < for CQ-DP143WJ >	
28	YFX014C071ZA	Panel Light (cd)	T(1-A)
29	YFC024C591ZA	Esc Front Cover	T(1-A)
30	XTB2+4PFZ	Screw (panel)	T(1-A)
31	FX0054C055ZA	Spring (open)	T(1-B)
32	YFE134C422ZA	Button(band/src)	T(2-A)
33	YFE074C057ZA	Vol Knob	T(2-A)
34	YFC024C592ZA	Esc Rear Cover	T(2-B)
35	YFE134C420ZA	Button(preset)	T(1-B)
36	YFE134C419ZA	Button(release)	T(1-B)
37	YFE134C423ZA	Button(tune/track)	T(1-B)
38	YFE134C421ZA	Button(ej/disp)	T(1-B)
39	XTN2+8GFZ	Screw (esc)	T(2-B)
40	YFX214C315ZA	LCD Bracket	T(2-B)
41	YEFX0012300	Back Light Assy	T(2-B)
42	YFV024C080ZA	Sheet(lcd)	T(2-B)
44	YEFS02302	Dust Felt	T(2-B)
45	YFJ014C091ZA	Sensor Cap< for CQ-DP153(W.WJ) >	T(1-A)
46	YEFS011113	Pad	T(2-B)
47	YFV024C078ZA	Sheet(panel)	T(1-A)
48	YFX054C053ZA	Spring (knob)	T(2-A)
49	YJS064C002ZA	Screw (m3x8)	T(2-B)
50	YFV014C068ZA	Sheet	T(1-C)
52	XSB3+6FXS	Screw	T(3-C)
55	YEAP4C238	Main PCB Assy	T(2-C) /RTL
56	YEAP4C239	Display PCB Assy	T(3-C)/RTL

14 EXPLODED VIEW (Unit)

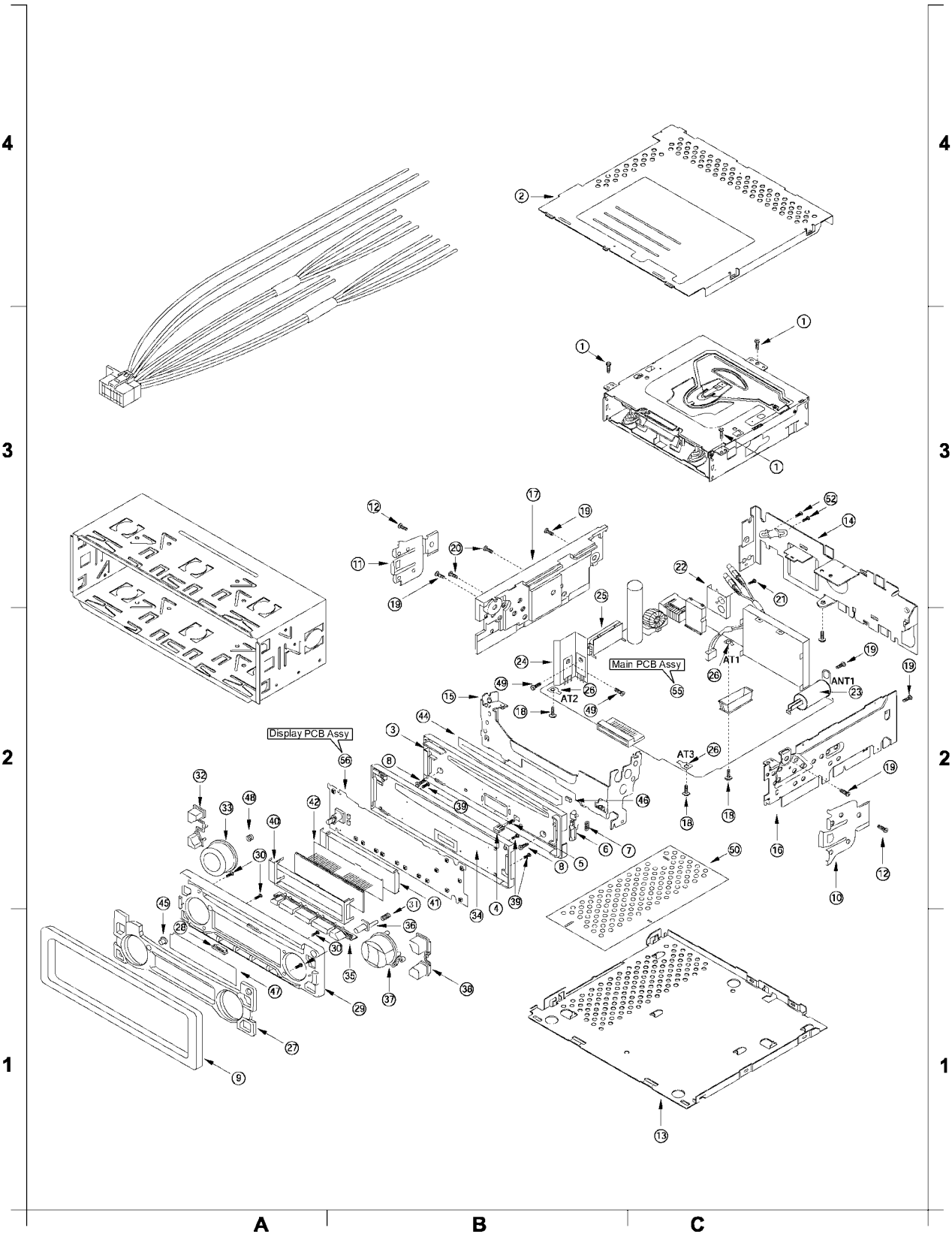

15 CD PLAYER MECHANICAL PARTS LIST

Note:

1. Be sure to make your orders of replacement parts according to this list.
2. Important safty notice: Component , indentified by ⚠ mark have special characteristics important for safety. when replacing any of these components, use only manufacturer's specified parts.
3. Location keys in the remarks column indicates the general location of the parts shown in the exploded drawing. as in a load map.
4. The marking (RTL) indicates that Retention Time is limited for this item. After the discontinuation of assembly in production, the item will continue to be availability is dependent on the type of assembly, and in accordance with the laws governing part and product retention. Aft the end of this period, the assembly will no longer be available.
5. "T" marks in remarks colum are indicated supply parts of TAMACO.

▪ Order intake period is basically six months after the first shipment

Ref. No.	Part No.	Part Name & Description	Remarks
1	3032 01 03	FRAME M	T(E-4)
2	3032 01 04	TOP COVER M	T(A-4)
3	3032 01 09	DAMPER F	T(E-3)
4	3032 01 10	DAMPER R	T(D-4)
11	3032 05 502	CHASSIS RIVET ASS'Y(M)	T(B-2)
12	3032 05 504	CHASSIS PLTAE RIVET ASS'Y(M)	T(C-4)
13	3032 05 301	CLAMPER ASS'Y	T(B-3)
14	3032 05 303	SPINDLE MOTOR (M) ASS'Y	T(D-1)
15	3032 05 56	CLAMPER ARM M	T(B-4)
16	3032 05 03	CHANGE GEAR SPRING	T(D-4)
17	3032 05 05	CHANGE GEAR 2	T(D-4)
18	3032 05 06	FEED GEAR	T(D-3)
19	3032 05 51	FEED RACK M	T(B-1)
20	3032 05 53	CHANGE LOCK LEVER M	T(D-3)
21	3032 05 57	FEED SW HOLDER (M)	T(C-1)
22	3032 05 54	PU SHAFT HOLDER (M)	T(B-1); T(B-2)
23	3032 05 13	CLAMPER SUB SPRING	T(B-3)
24	3032 05 58	FD SUB HOLDER M	T(B-1)
25	3032 05 18	TOP PLATE	T(B-2)
26	3032 05 19	SELECT LOCK ARM	T(A-1)
27	3032 05 61	TRIGGER ARM M	T(C-4)
28	3032 05 21	SLIDE HOOK	T(C-4)
29	3032 05 55	PU SHAFT M	T(B-1)
30	3032 05 59	CLAMPER ARM SPRING M	T(B-4)
31	3032 05 26	SELECT LOCK ARM SPRING	T(A-1)
32	3032 05 60	SUSPENSION SPRING M	T(B-3); T(C-1); T(C-4); T(D-2)
33	3032 05 29	SELECT ARM R	T(A-2)
34	3032 05 30	LINK PLATE	T(A-2)
35	3032 05 31	LINK PLATE SPRING	T(A-2)
36	3032 05 23	CUSHION F	T(A-1)
37	3032 05 24	CUSHION R	T(B-4)
43	3032 08 03	SELECT PLATE L	T(A-1)
44	3032 08 04	SELECT PLATE R	T(A-2)
45	3032 08 05	SELECT PIECE L	T(A-1)
46	3032 08 06	SELECT PIECE R	T(A-2)
61	6904 16 03	PICK UP RD-DAP005-TN	T(B-2)
62	6418 04 07	DET SW ESE 22MH55	T(C-1)
72	3032 10 02	MODE SW	T(A-1)
73	3032 10 16	LD WIRE ASS'Y M	T(B-3); T(C-1)
74	3032 10 15	SW WIRE ASS'Y M	T(A-1)
75	3032 10 14	SP WIRE ASS'Y M	T(D-2)
77	3032 10 13	WIRE CLAMPER M	T(C-2); T(C-3); T(D-4); T(E-3)
81	3032 11 301	ROLLER SHAFT ASS'Y	T(E-2)
82	3032 11 501	LOADING GEAR PLATE RIVET ASS'Y	T(D-2)
83	3032 11 302	LOADING PLATE ASS'Y	T(C-4)
84	3032 11 502	LOCK ARM RIVET ASS'Y	T(E-1)
85	3032 11 303	LOADING / FEED MOTOR ASS'Y (MB)	T(B-3)
86	3032 11 01	LOADING GEAR 1	T(D-4)
87	3032 11 02	LOADING GEAR 2	T(D-3)
88	3032 11 03	LOADING GEAR 3	T(D-3)
89	3032 11 04	LOADING GEAR 4	T(D-2)
90	3032 11 05	LOADING GEAR 5	T(D-2)
91	3032 11 06	LOADING GEAR 6	T(D-2)
92	3032 11 07	LOADING GEAR 7	T(D-3)
93	3032 11 11	ROLLER GUIDE	T(D-1); T(E-3)
94	3032 11 14	ROLLER GUIDE SPRING	T(D-1); T(E-1)
95	3032 11 16	DISC STOPPER ARM	T(C-1)
96	3032 11 17	DISC STOP ARM SPRING	T(D-2)
97	3032 11 18	LD GEAR BRACKET	T(D-2)
98	3032 11 25	L SLIDE PLATE	T(D-4)
99	3032 11 31	LOADING PLATE SPRING	T(C-4)
100	3032 11 33	LDG ROLLER	T(D-1)
101	1821 12 23	PK COLLAR SCREW A	T(E-1)
111	9P04 20 031	TAPPING SCREW 2X3	T(A-3); T(B-3); T(B-4);T(D-2); T(E-4)
112	9P04 20 041	TAPPING SCREW 2X4	T(B-1); T(B-2)
113	9B03 20 041	TAPPING BIND SCREW 2X4	T(D-2)
114	9C01 17 183	CAMERA SCREW 1.7X1.8	T(B-2)
115	9C01 20 203	CAMERA SCREW 2X2	T(C-3)
116	9C45 17 503	CAMERA TAPPING SCREW P3 M1.7X5	T(C-1)
121	9W01 30 170	PW 3.5X8X0.3	T(D-4)
122	9W05 13 060	HLW 1.85X5X0.13	T(D-1)
123	9W07 10 070	LUMILAR WASHER 3.1X6X0.1	T(D-1)
124	9E01 00 152	E RING S 1.5	T(D-4)
125	9W01 13 020	PW 2.1X4X0.13	T(D-3)

16 EXPLODED VIEW (CD Deck)

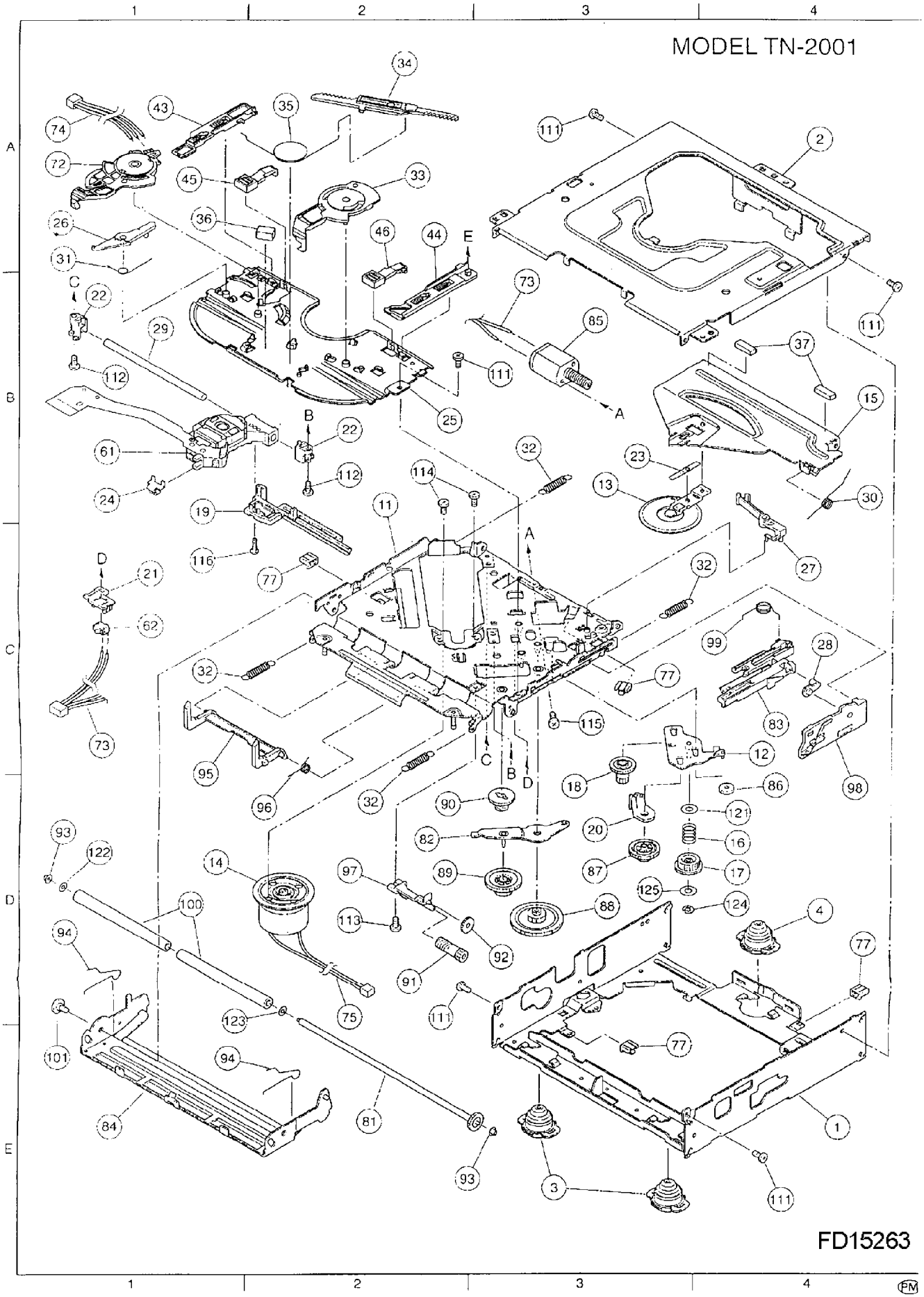

17 SCHEMATIC DIAGRAM for printing with A4 size

17.1. Main Block (Left Side)

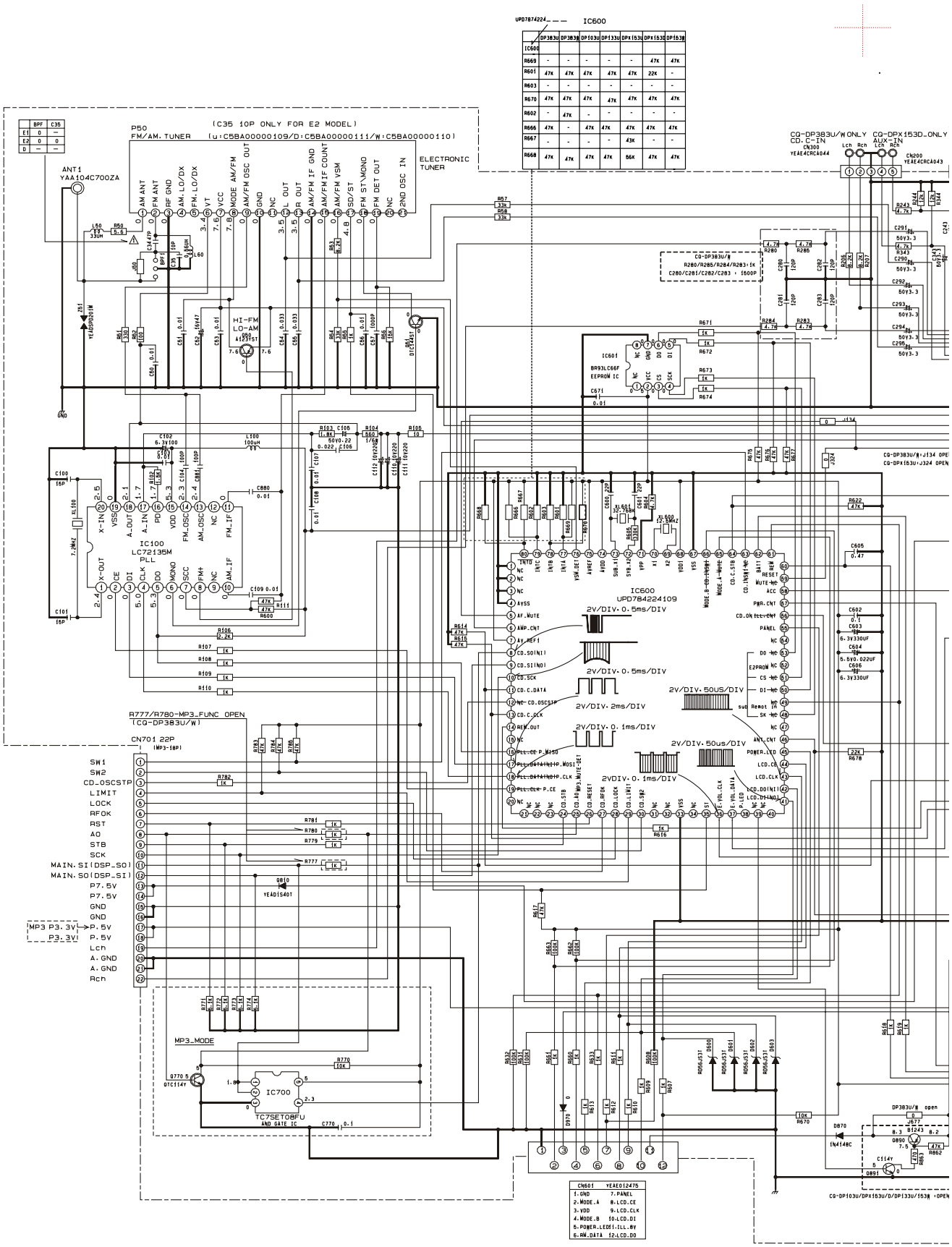

17.2. Main Block (Right Side)

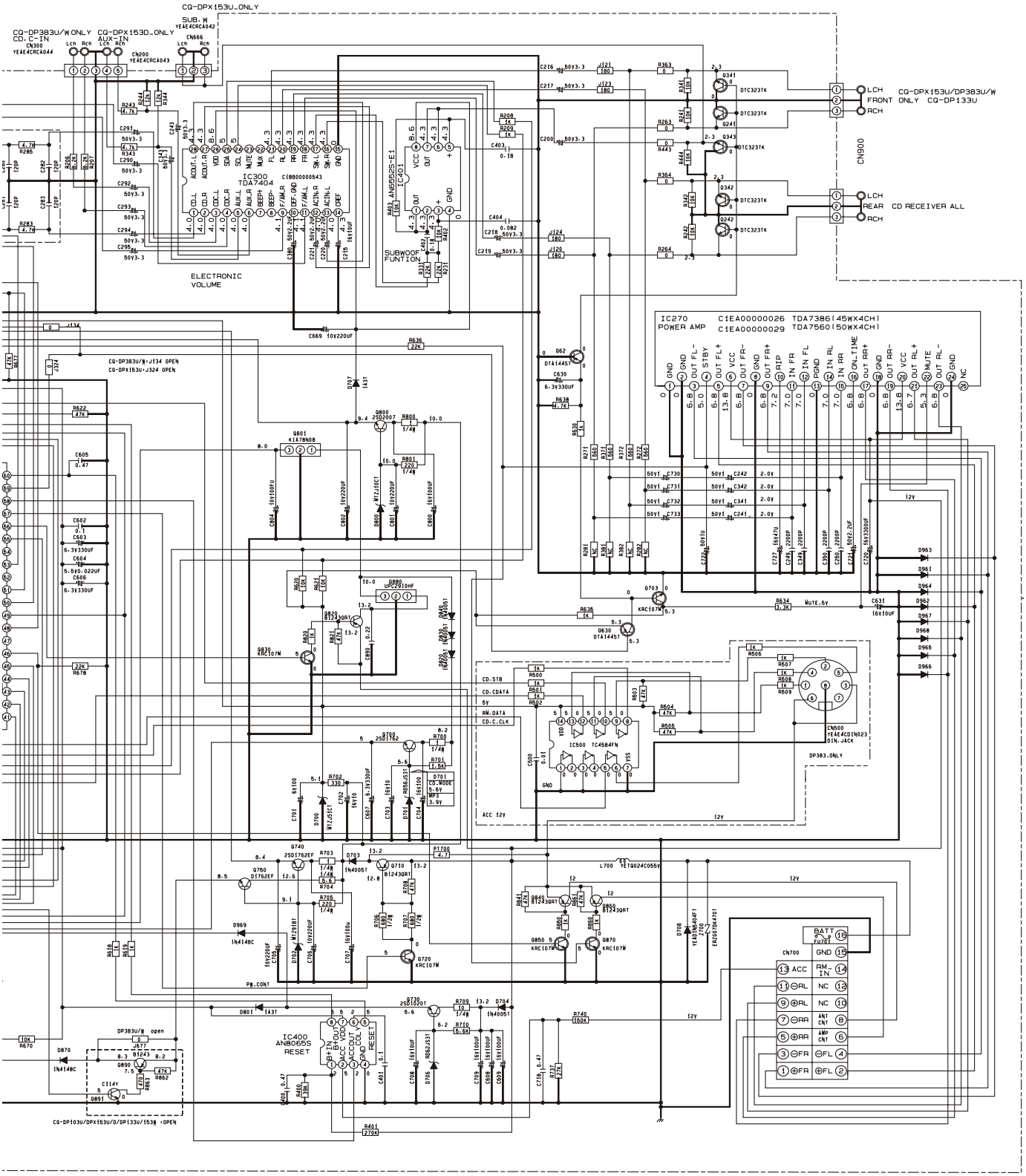

CQ-DP143WJ / DP153(W.WJ) MainBlock

17.3. CD SERVO Block (Left Side)

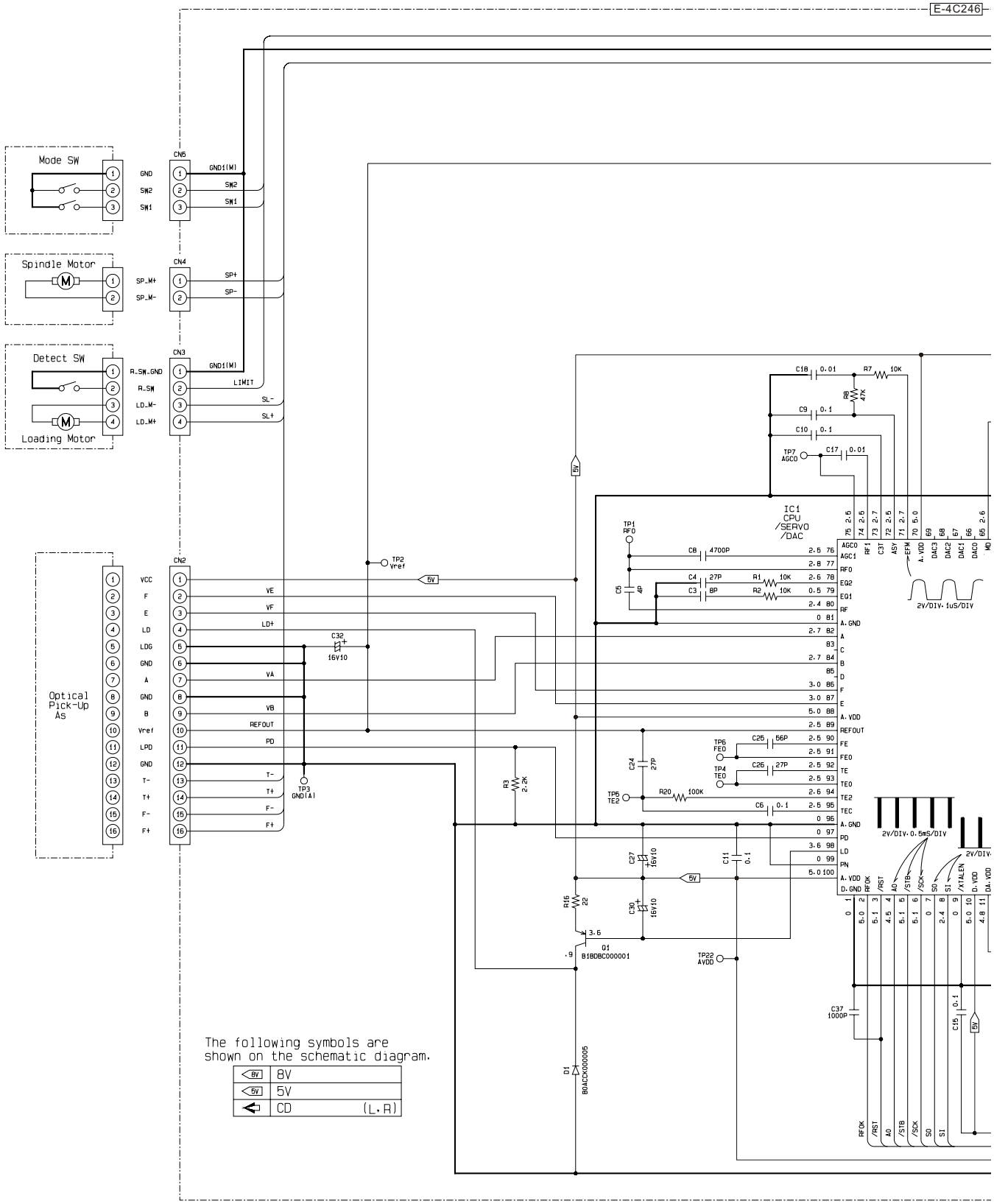

17.4. CD SERVO Block (Right Side)

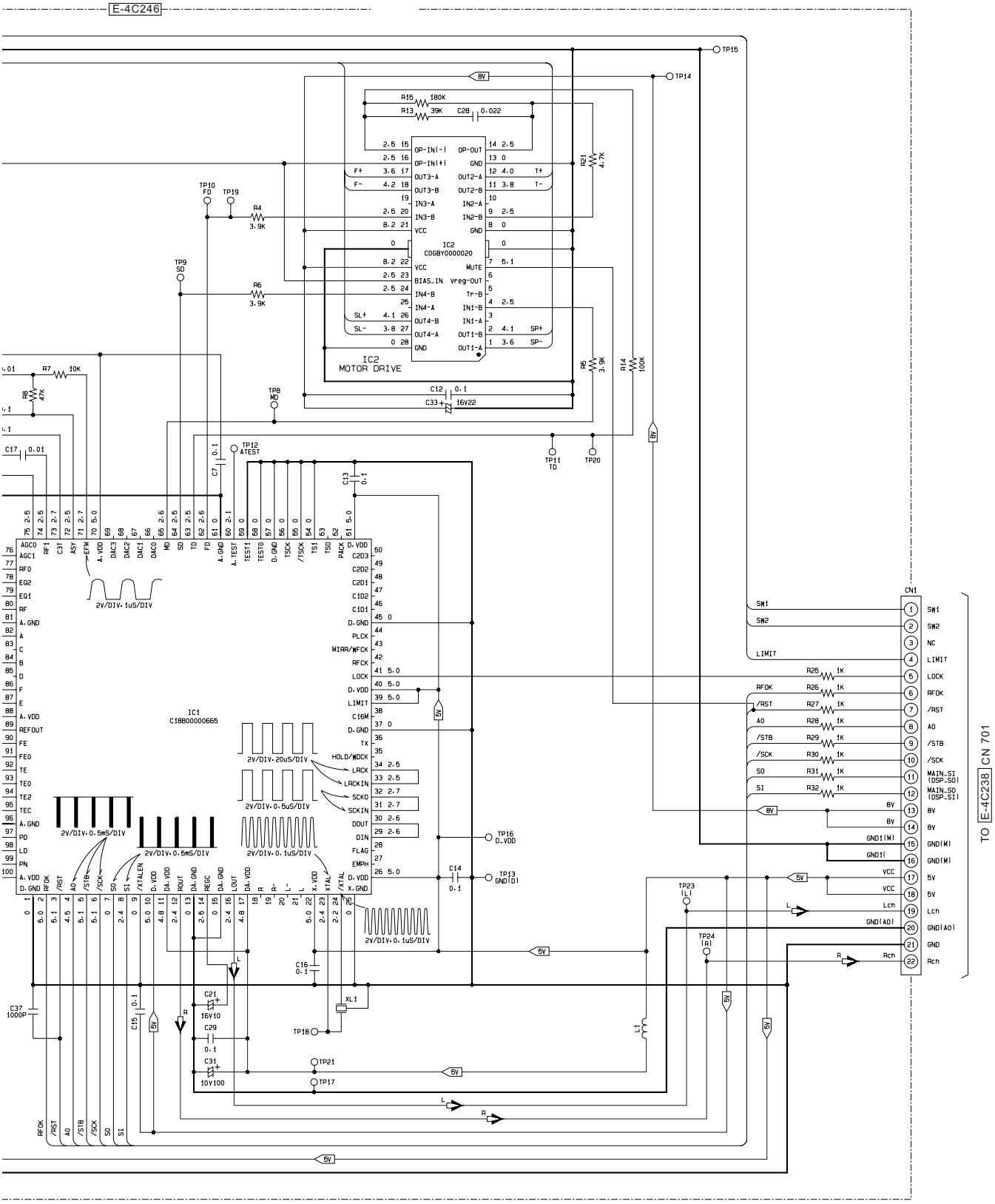

CQ-DP143WJ / DP153(W.WJ) CD SERVO Block

Printed in Taiwan
2003.1

MODEL TN-2001

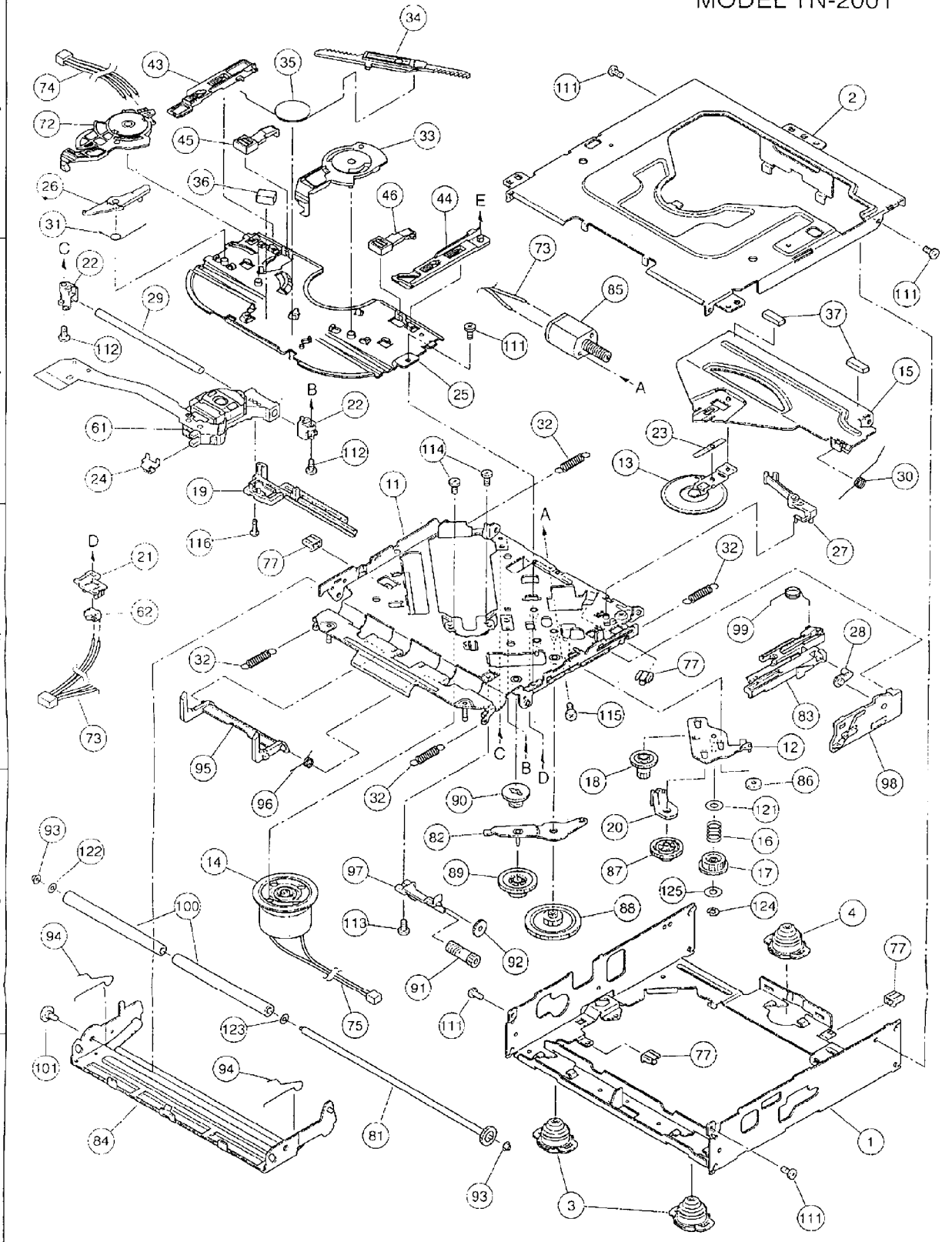

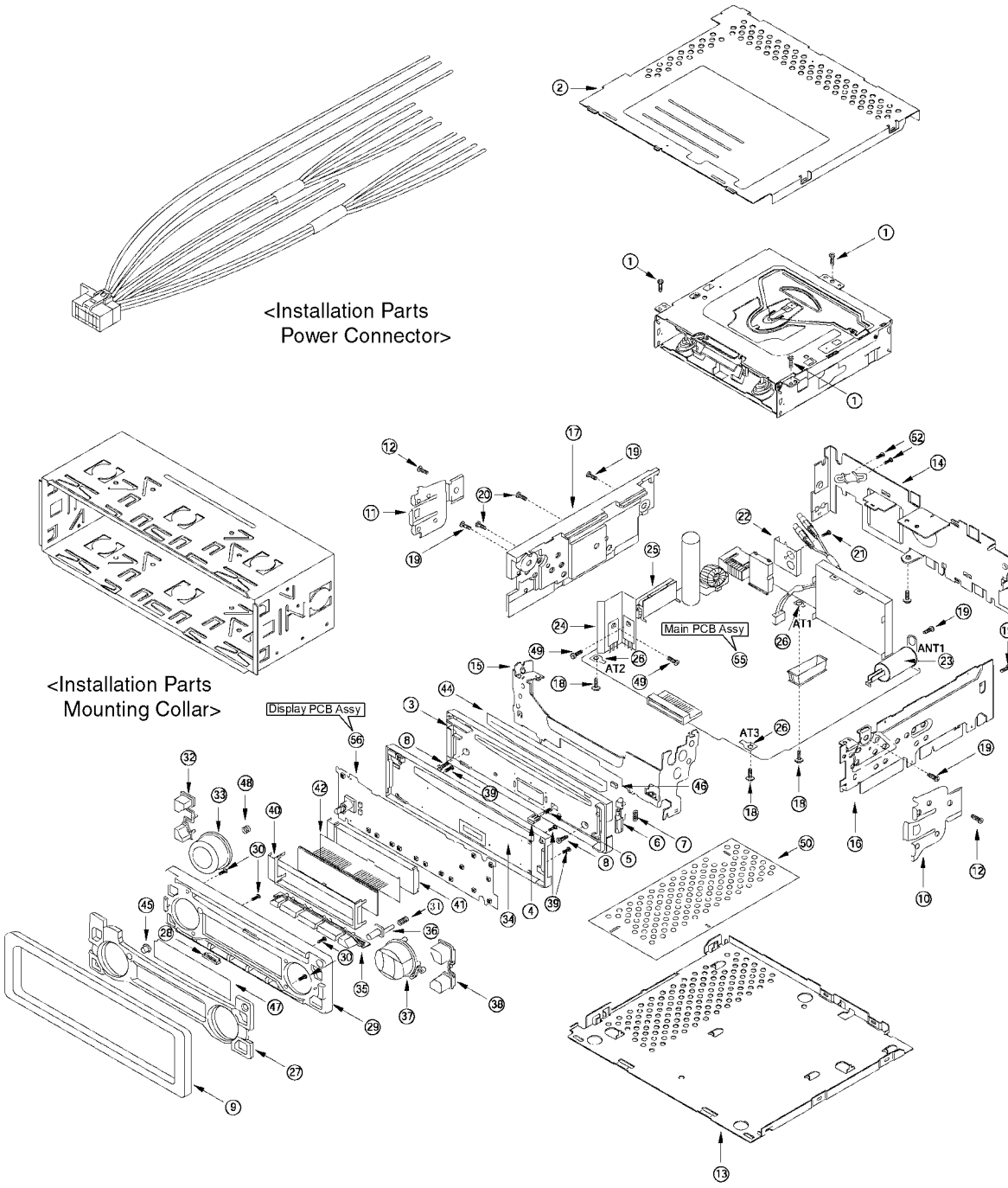
<Installation Parts
Power Connector>
<Installation Parts
Mounting Collar>
Display PCB Assy
Main PCB Assy
AT1
AT2
AT3
ANT1

CAUTION:

This product utilizes a laser diode with the unit turned "on", laser radiation is emitted from the pickup lens.

Laser radiation from the pickup lens is safety level, but be sure the followings:

1. Do not disassemble the optical pickup unit, since radiation from exposed laser diode is dangerous.
2. Do not adjust the variable resistor on the pickup unit. It was already adjusted.
3. Do not look at the focus lens using optical instruments.
4. Recommend not to look at pickup lens for a long time.

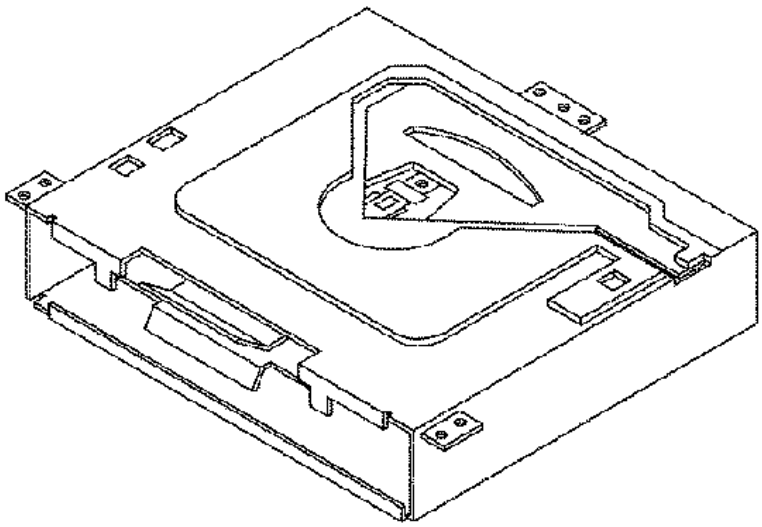

Deck Ass'y (Upper Side)

Caution

This Product utilizes a laser.

Use of controls or adjustments or performance of procedures other than those specified herein may result in hazardous radiation exposure.

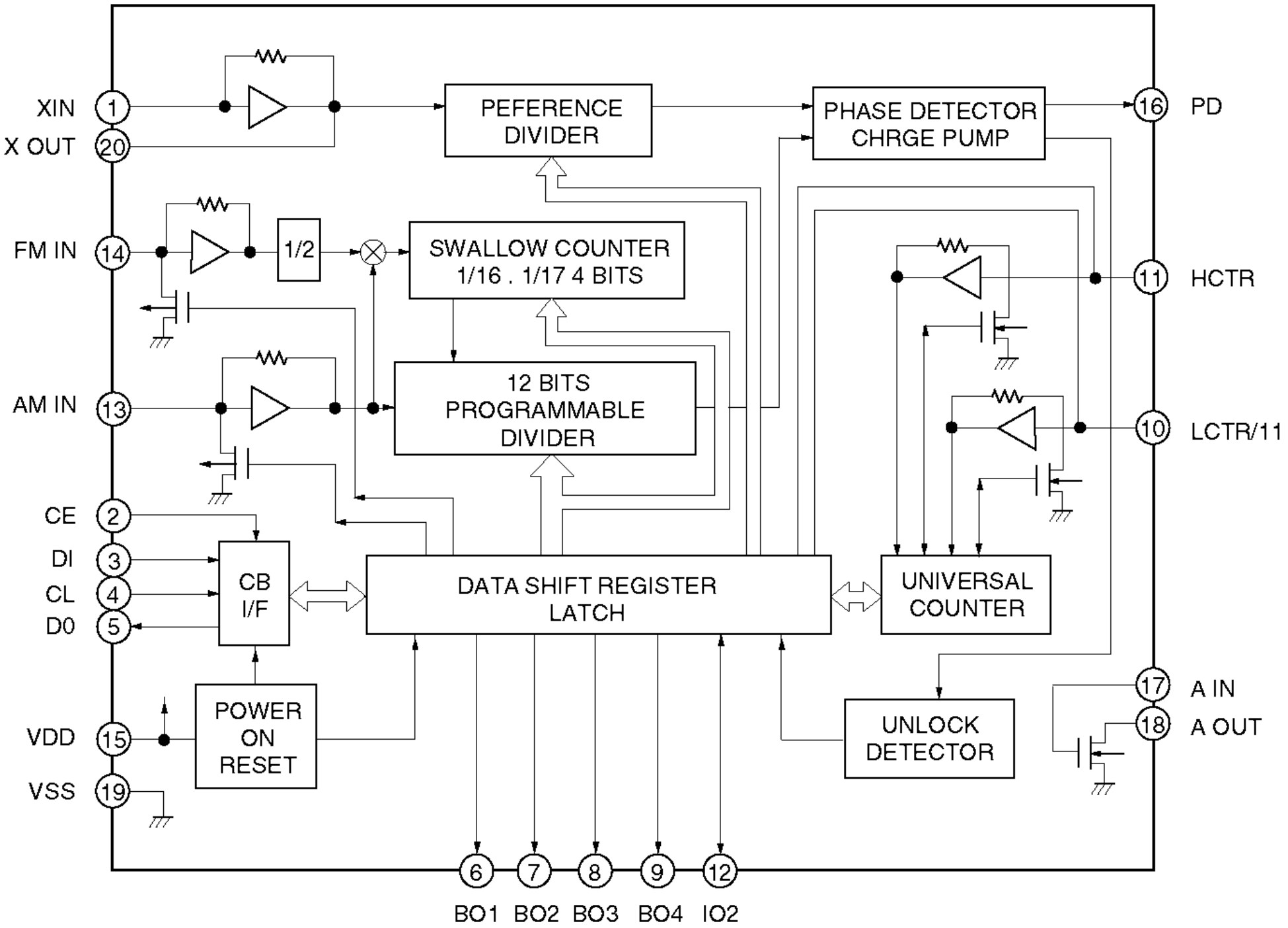
XIN
X OUT
FM IN
AM IN
CE
DI
CL
D0
VDD
VSS
PEFERENCE DIVIDER
PHASE DETECTOR CHRGE PUMP
PD
1/2
SWALLOW COUNTER 1/16 . 1/17 4 BITS
12 BITS PROGRAMMABLE DIVIDER
HCTR
LCTR/11
CB I/F
DATA SHIFT REGISTER LATCH
UNIVERSAL COUNTER
POWER ON RESET
UNLOCK DETECTOR
A IN
A OUT
BO1
BO2
BO3
BO4
IO2

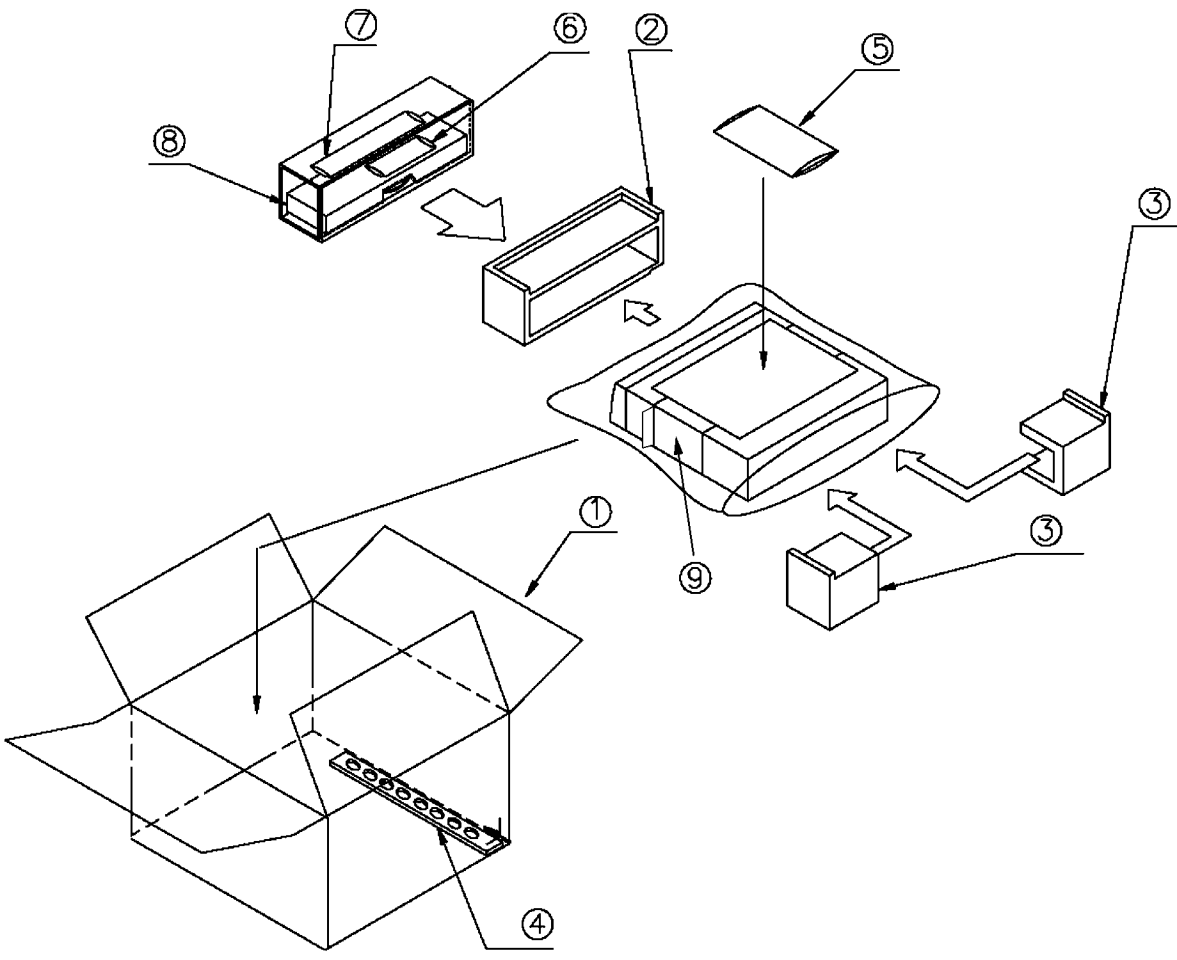
⑦
⑥
②
⑤
⑧
③
①
③
⑨
④

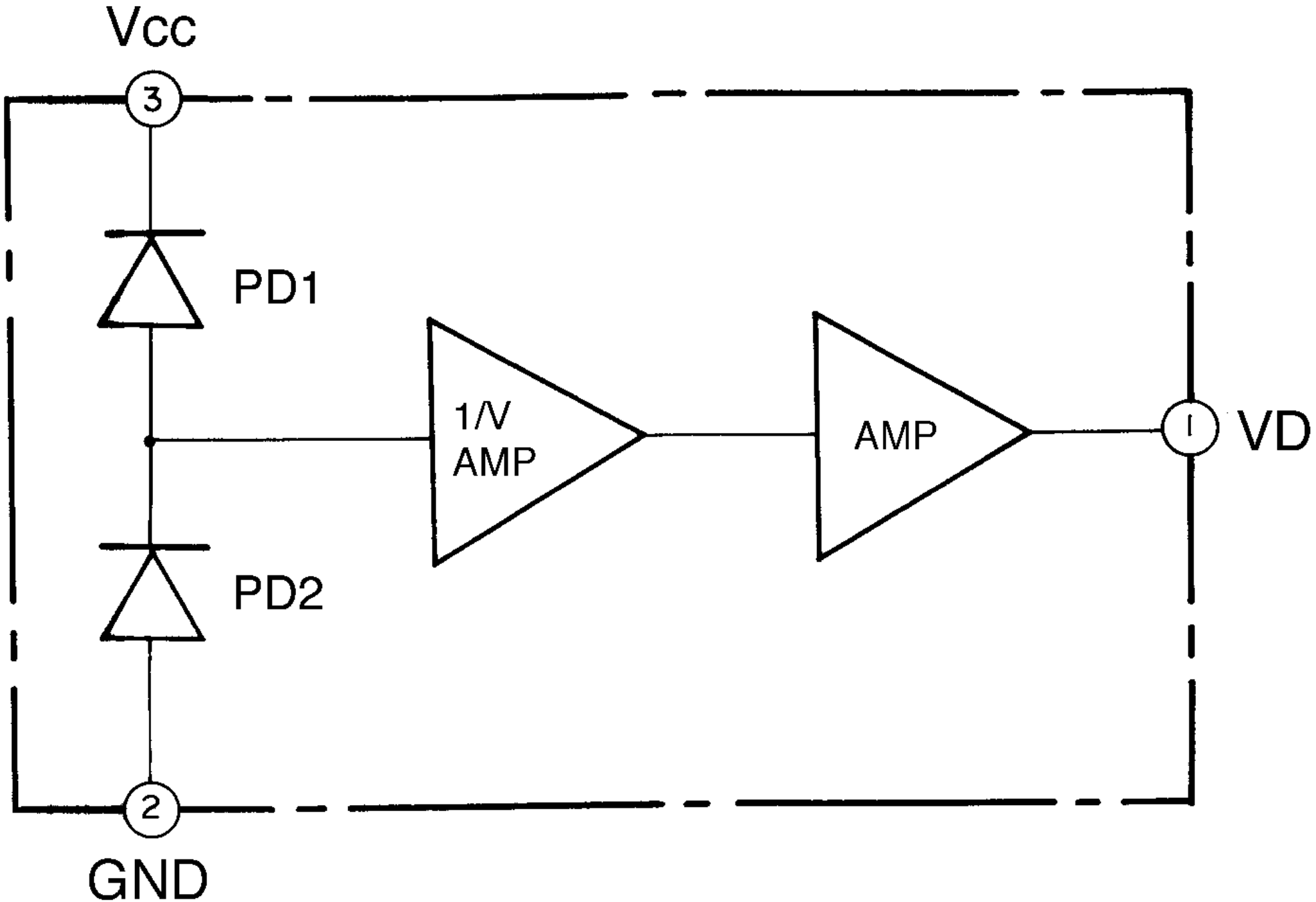
Vcc
3
PD1
1/V
AMP
AMP
1
VD
PD2
2
GND

Note:

1. Be sure to make your orders of replacement parts according to this list.
2. Important safty notice: Component, indentified by ⚠ mark have special characteristics important for safety. when replacing any of these components, use only manufacturer's specified parts.
3. Location keys in the remarks column indicates the general location of the parts shown in the exploded drawing. as in a load map.
4. The marking (RTL) indicates that Retention Time is limited for this item. After the discontinuation of assembly in production, the item will continue to be availability is dependent on the type of assembly, and in accordance with the laws governing part and product retention. Aft the end of this period, the assembly will no longer be available.
5. "T" marks in remarks colum are indicated supply parts of TAMACO.

- Order intake period is basically six months after the first shipment

Note:

1. Be sure to make your orders of replacement parts according to this list.
2. Important safty notice: Component, indentified by ⚠ mark have special characteristics important for safety. when replacing any of these components, use only manufacturer's specified parts.
3. Location keys in the remarks column indicates the general location of the parts shown in the exploded drawing. as in a load map.
4. The marking (RTL) indicates that Retention Time is limited for this item. After the discontinuation of assembly in production, the item will continue to be availability is dependent on the type of assembly, and in accordance with the laws governing part and product retention. Aft the end of this period, the assembly will no longer be available.
5. "T" marks in remarks colum are indicated supply parts of TAMACO.

- Order intake period is basically six months after the first shipment

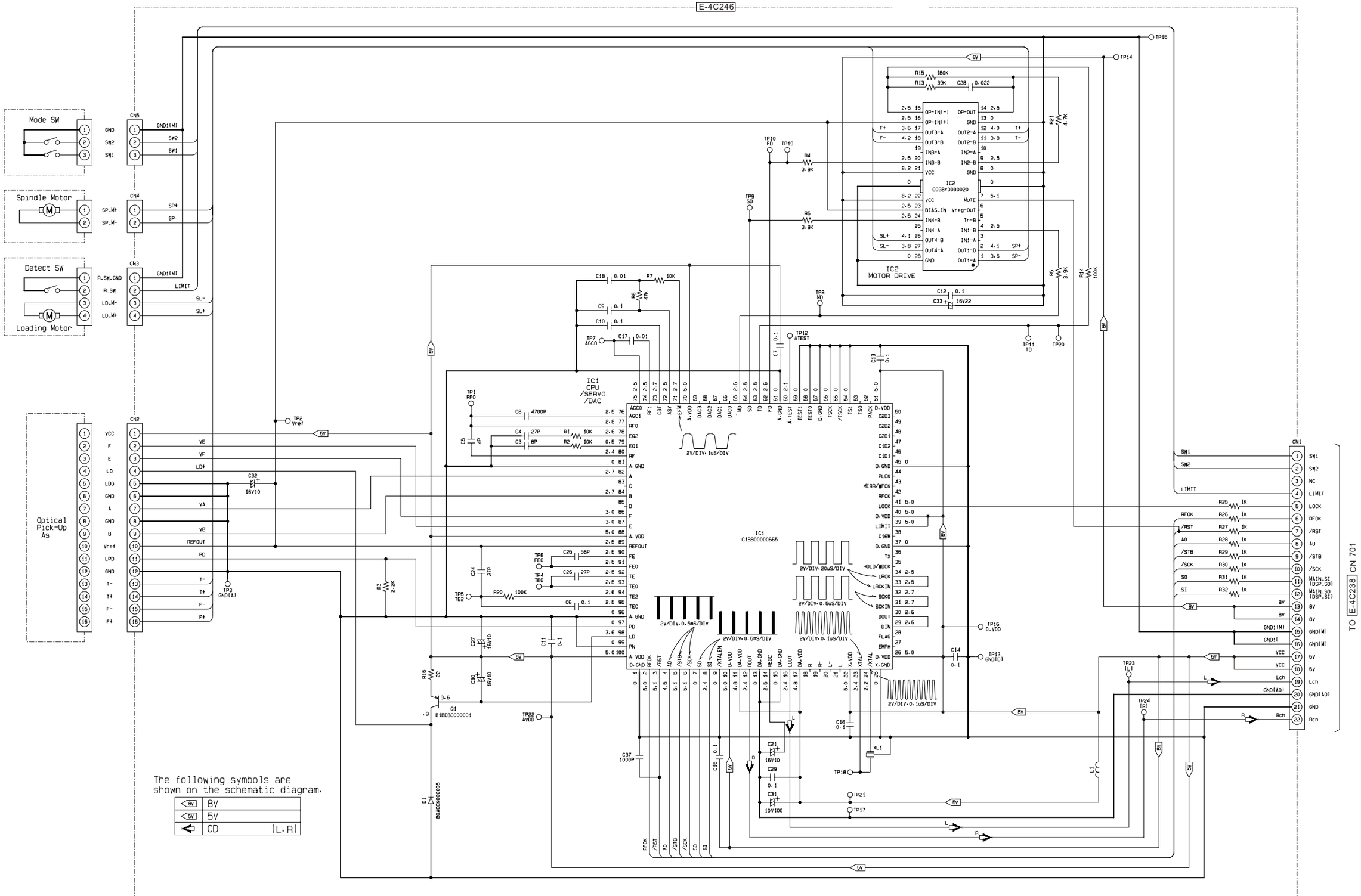

CQ-DP143WJ / DP153(W.WJ) CD SERVO Block

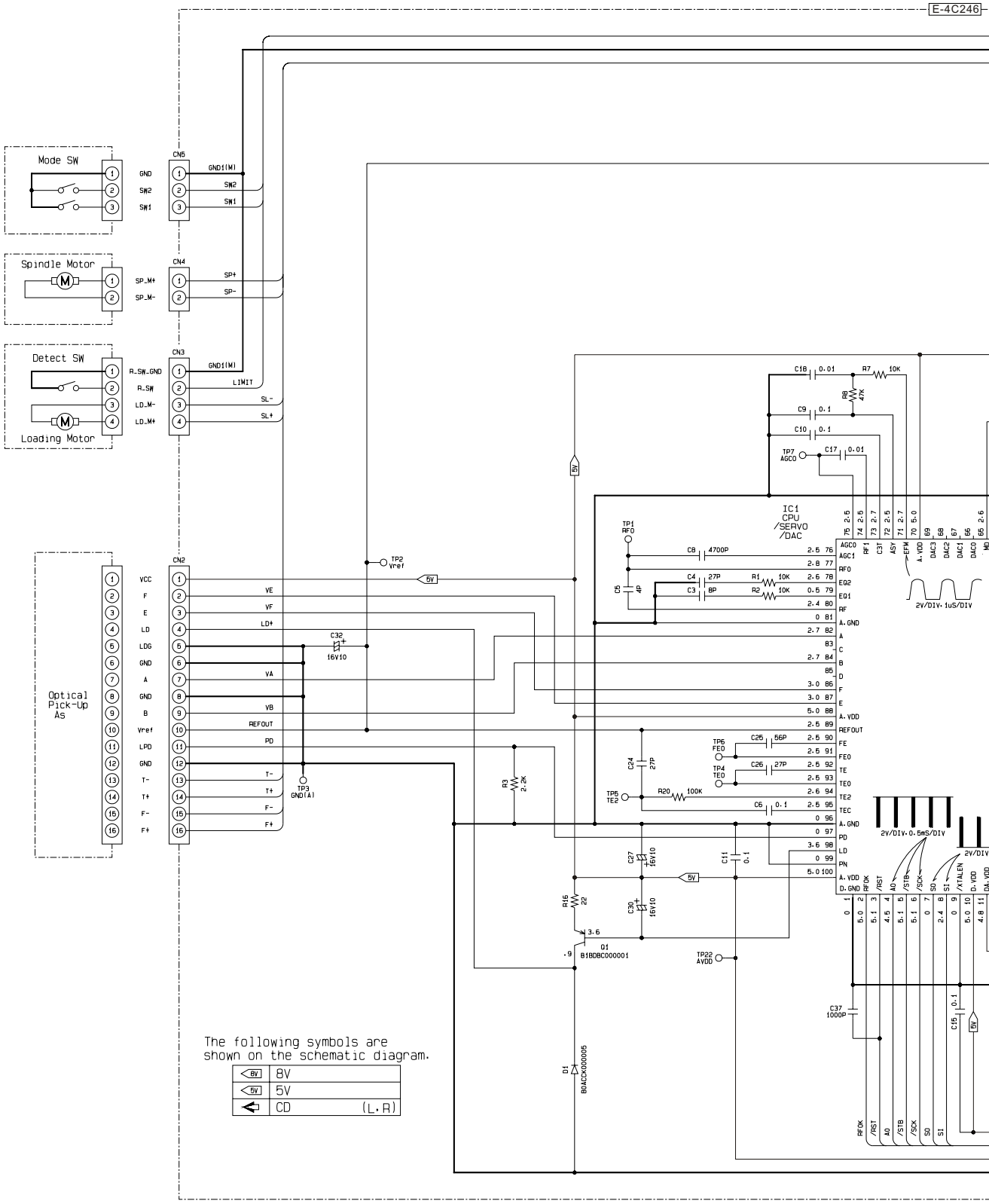
Mode SW
GND
SW2
SW1
CN5
GND1(M)
SW2
SW1
Spindle Motor
SP_M+
SP_M-
CN4
SP+
SP-
Detect SW
R_SW_GND
R_SW
LD_M-
LD_M+
Loading Motor
CN3
GND1(M)
LIMIT
SL-
SL+
Optical Pick-Up As
VCC
F
E
LD
LDG
GND
A
GND
B
Vref
LPD
GND
T-
T+
F-
F+
CN2
VE
VF
LD+
VA
VB
REFOUT
PD
T-
T+
F-
F+
TP2 Vref
TP3 GND(A)
C32 16V10
5V
IC1 CPU /SERVO /DAC
AGC0
AGC1
RF0
EQ2
EQ1
RF
A.GND
A
C
B
D
F
E
A.VDD
REFOUT
FE
FEO
TE
TEO
TE2
TEC
A.GND
PD
LD
PN
A.VDD
D.GND
RFOK
/RST
AO
/STB
/SCK
SO
SI
/XTALEN
D.VDD
DA.VDD
AGC0
RF1
C3T
ASY
EFM
A.VDD
DAC3
DAC2
DAC1
DAC0
MD
C18 0.01
R7 10K
R8 47K
C9 0.1
C10 0.1
TP7 AGCO
C17 0.01
TP1 RF0
C8 4700P
C5 4P
C4 27P
R1 10K
C3 8P
R2 10K
2V/DIV. 1uS/DIV
C24 27P
TP6 FEO
C25 56P
TP4 TEO
C26 27P
TP5 TE2
R20 100K
C6 0.1
R3 2.2K
C27 16V10
C11 0.1
R16 22
C30 16V10
Q1 B1BDBC000001
TP22 AVDD
2V/DIV. 0.5mS/DIV
2V/DIV
C37 1000P
C15 0.1
D1 B0ACDC000005
The following symbols are shown on the schematic diagram.
8V
5V
CD (L.R)

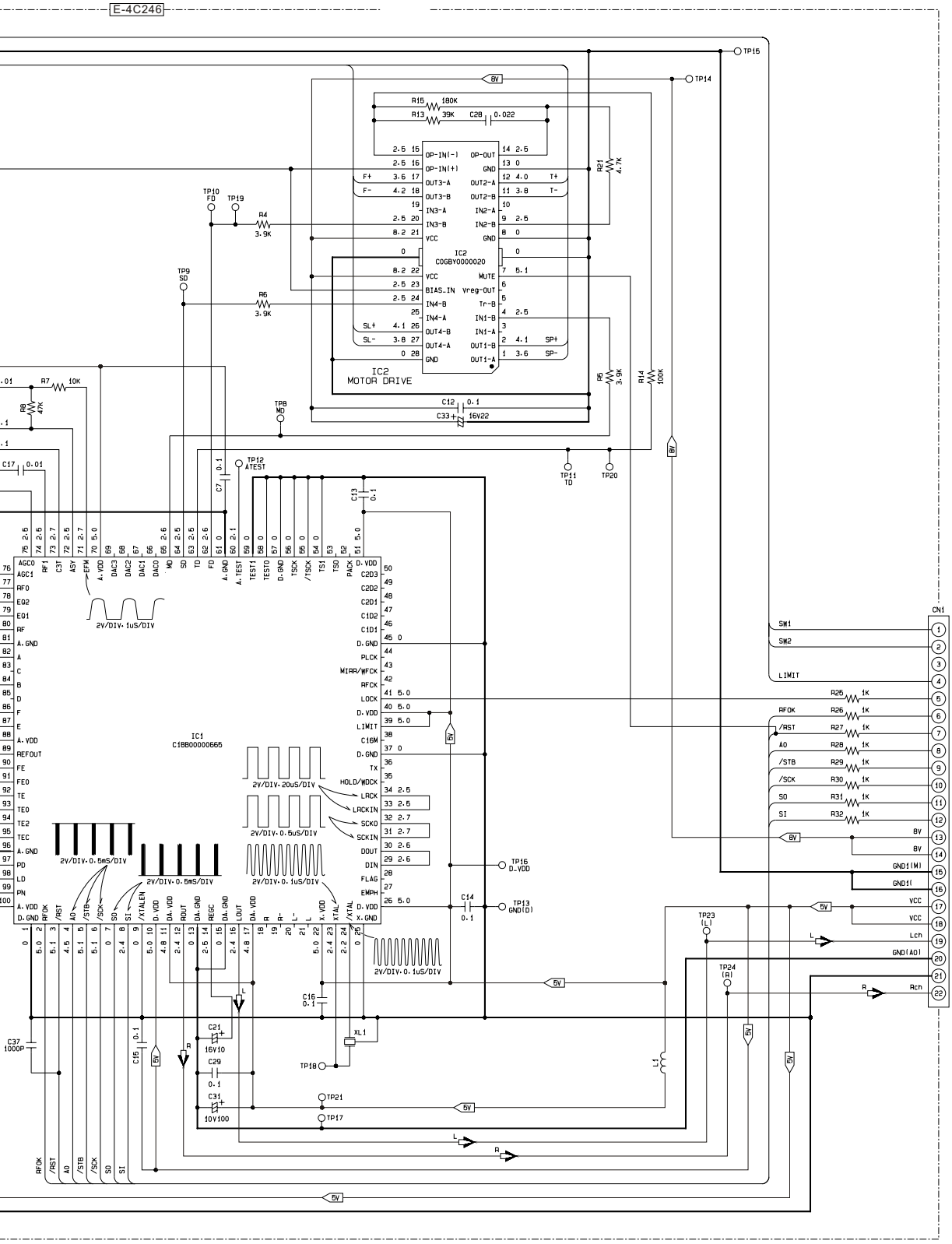
E-4C246
IC2
COGBY0000020
IC2
MOTOR DRIVE
IC1
C1BB00000665
CN1
TO E-4C238 CN 701
2V/DIV·1uS/DIV
2V/DIV·20uS/DIV
2V/DIV·0.5uS/DIV
2V/DIV·0.6mS/DIV
2V/DIV·0.1uS/DIV

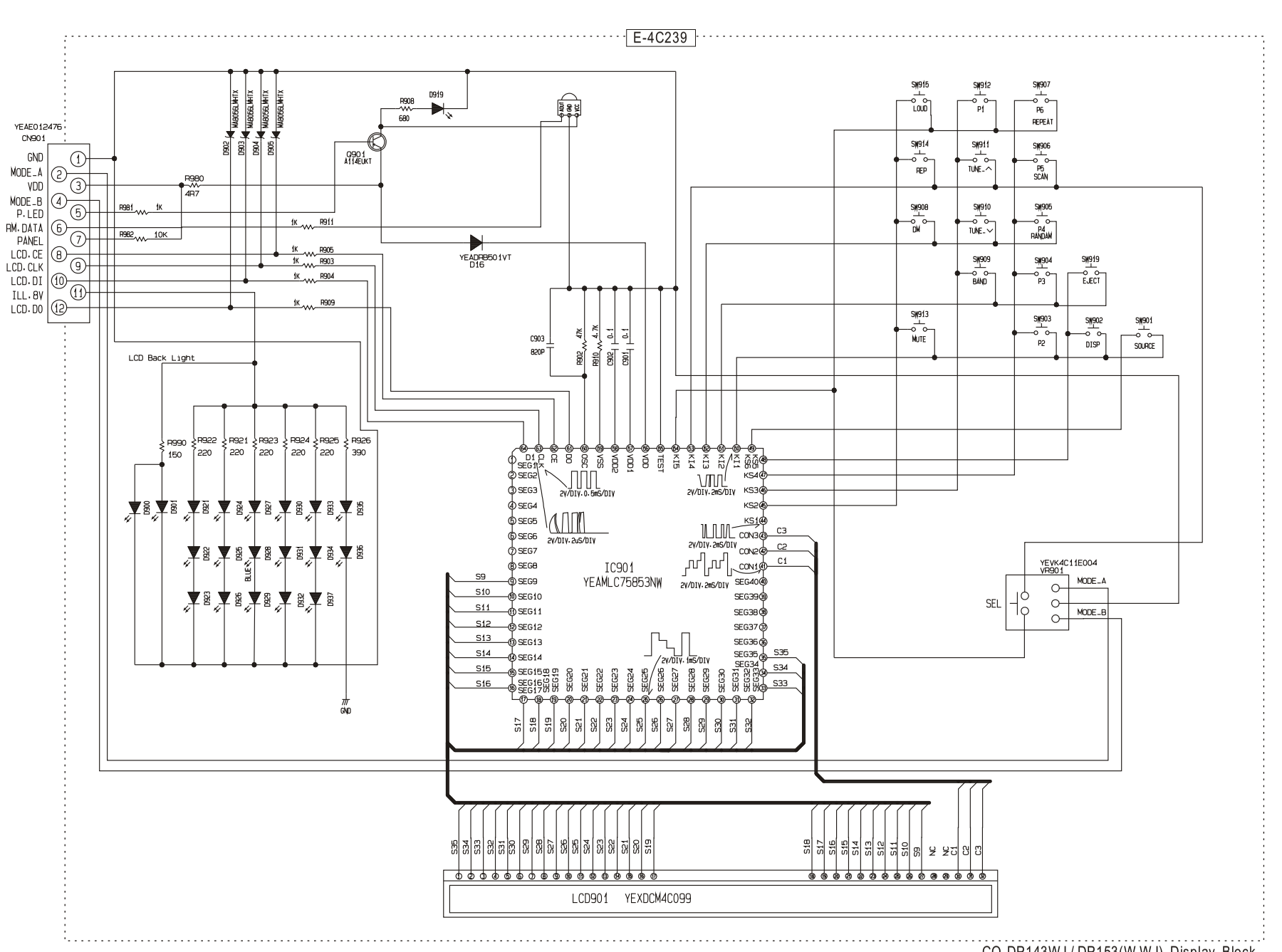
E-4C239
YEAE012476
CN901
GND
MODE_A
VDD
MODE_B
P.LED
RM.DATA
PANEL
LCD.CE
LCD.CLK
LCD.DI
ILL.8V
LCD.DO
R980 4R7
R981 1K
R982 10K
R911 1K
R905 1K
R903 1K
R904 1K
R909 1K
R908 680
D919
Q901 A114EUKT
YEADRB501VT D16
LCD Back Light
R990 150
R922 220
R921 220
R923 220
R924 220
R925 220
R926 390
GND
C903 820P
R902 47K
R910 4.7K
C902 0.1
C901 0.1
IC901
YEAMLC75853NW
2V/DIV.0.5mS/DIV
2V/DIV.2mS/DIV
2V/DIV.2uS/DIV
2V/DIV.2mS/DIV
2V/DIV.2mS/DIV
2V/DIV.1mS/DIV
SW915 LOUD
SW912 P1
SW907 P6 REPEAT
SW914 REP
SW911 TUNE_^
SW906 P5 SCAN
SW908 DM
SW910 TUNE_v
SW905 P4 RANDAM
SW909 BAND
SW904 P3
SW919 EJECT
SW913 MUTE
SW903 P2
SW902 DISP
SW901 SOURCE
YEVK4C11E004
VR901
SEL
MODE_A
MODE_B
LCD901 YEXDCM4C099

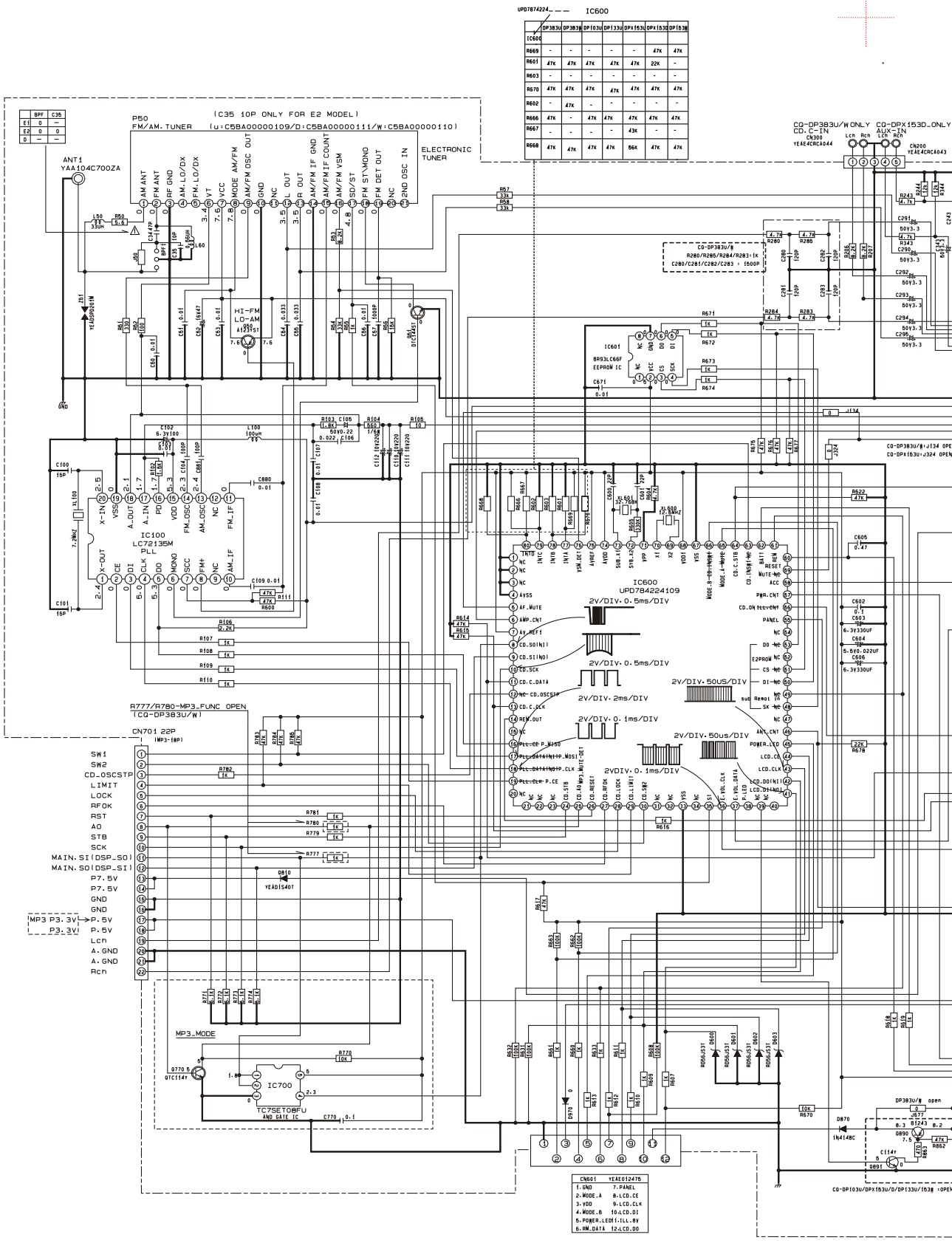
IC600
UPD784224109
IC100
LC72135M
PLL
IC601
BR93LC66F
EEPROM IC
IC700
TC7SET08FU
AND GATE IC
P50
FM/AM.TUNER
(C35 10P ONLY FOR E2 MODEL)
(u:C5BA00000109/D:C5BA00000111/W:C5BA00000110)
ELECTRONIC TUNER
ANT1
YAA104C700ZA
CN300
YEAE4CRCA044
CN200
YEAE4CRCA043
CN701 22P
(MP3-6P)
R777/R780-MP3_FUNC OPEN
(CQ-DP383U/W)
MP3_MODE
CN601 YEAE012475
1.GND
2.MODE.A
3.VDD
4.MODE.B
5.POWER.LED
6.RW.DATA
7.PANEL
8.LCD.CE
9.LCD.CLK
10.LCD.DI
11.ILL.BY
12.LCD.DO

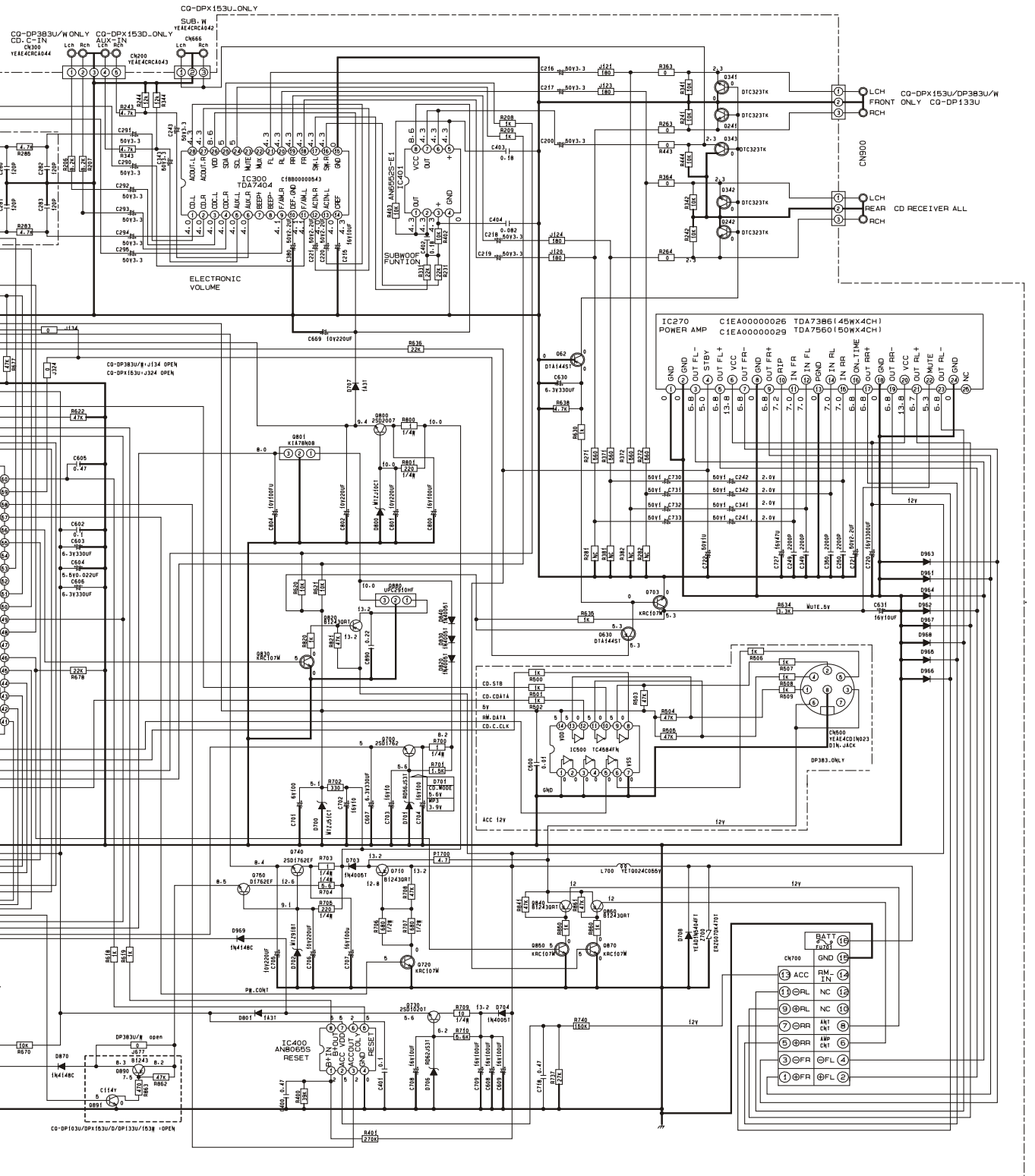

CQ-DP143WJ / DP153(W.WJ) MainBlock

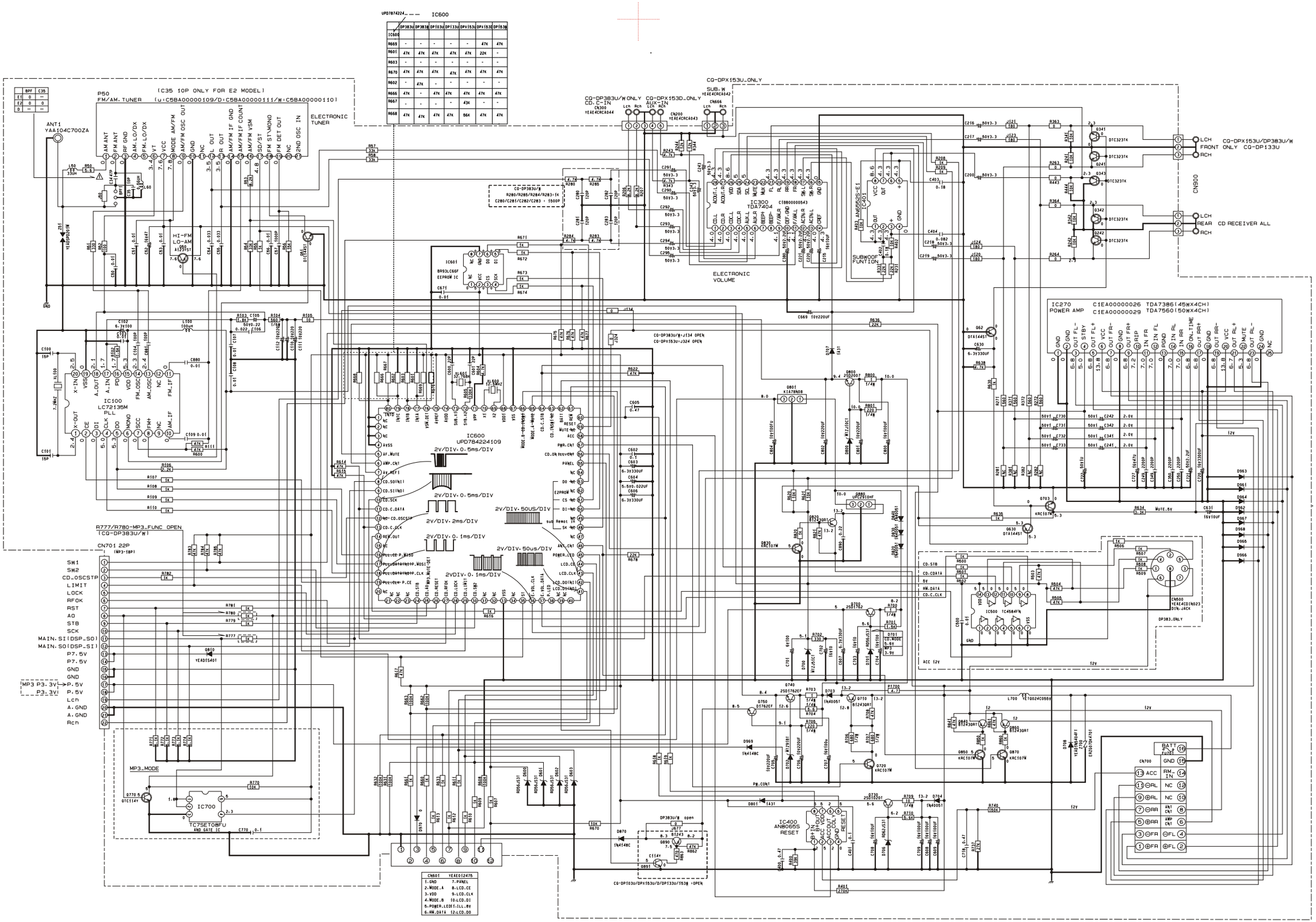
IC600
UPD7874224
IC100
LC72135M
PLL
IC300
TDA7404
ELECTRONIC VOLUME
SUBWOOF FUNTION
IC270
POWER AMP
C1EA00000026 TDA7386(45WX4CH)
C1EA00000029 TDA7560(50WX4CH)
IC600
UPD7842224109
IC700
TC7SET08FU
AND GATE IC
IC400
AN8065S
RESET
IC500
TC4584FN
CN900
CN700
CN701 22P
CN601
CN600
YEAE4CDIN023
DIN-JACK
DP383.ONLY
CQ-DPX153U_ONLY
CQ-DP383U/W ONLY
CQ-DPX153D_ONLY
CQ-DPX153U/DP383U/W
FRONT ONLY CQ-DP133U
CD RECEIVER ALL
ELECTRONIC TUNER
P50
FM/AM.TUNER
(C35 10P ONLY FOR E2 MODEL)
(u:C5BA00000109/D:C5BA00000111/W:C5BA00000110)
ANT1
YAA104C700ZA
R777/R780-MP3_FUNC OPEN
(CQ-DP383U/W)
MP3_MODE
2V/DIV·0.5ms/DIV
2V/DIV·2ms/DIV
2V/DIV·0.1ms/DIV
2V/DIV·50us/DIV
2V/DIV·0.1ms/DIV
2V/DIV·50US/DIV
CQ-DP143WJ / DP153(W.WJ) MainBlock

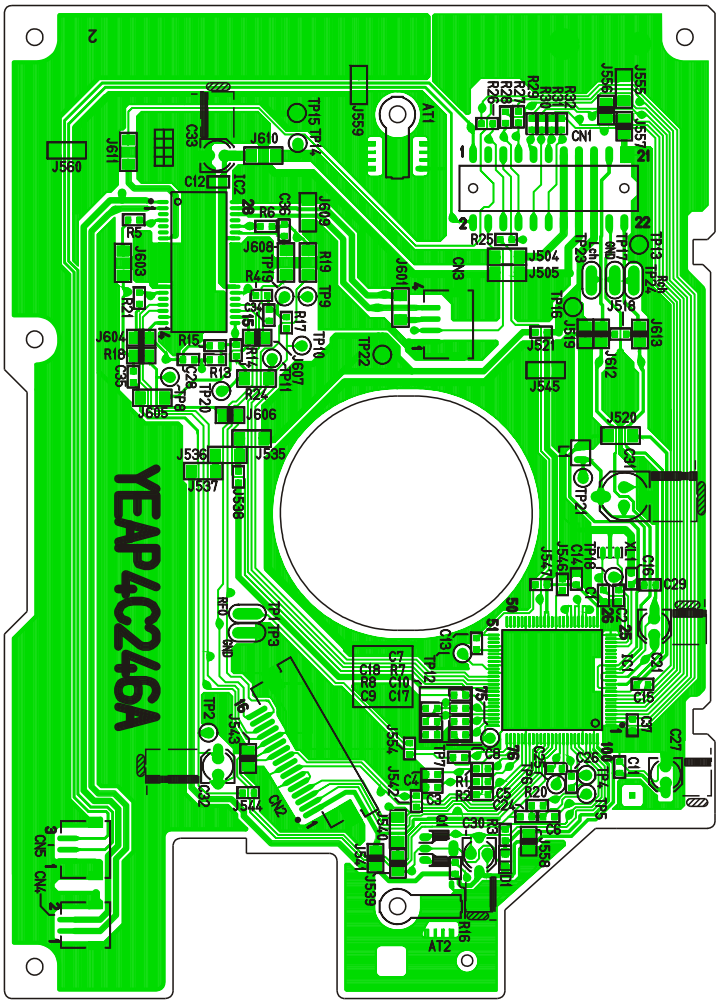

[E-4C246] [BOTTOM VIEW]

CQ-DP143WJ / DP153(W.WJ) CD SERVO PCB

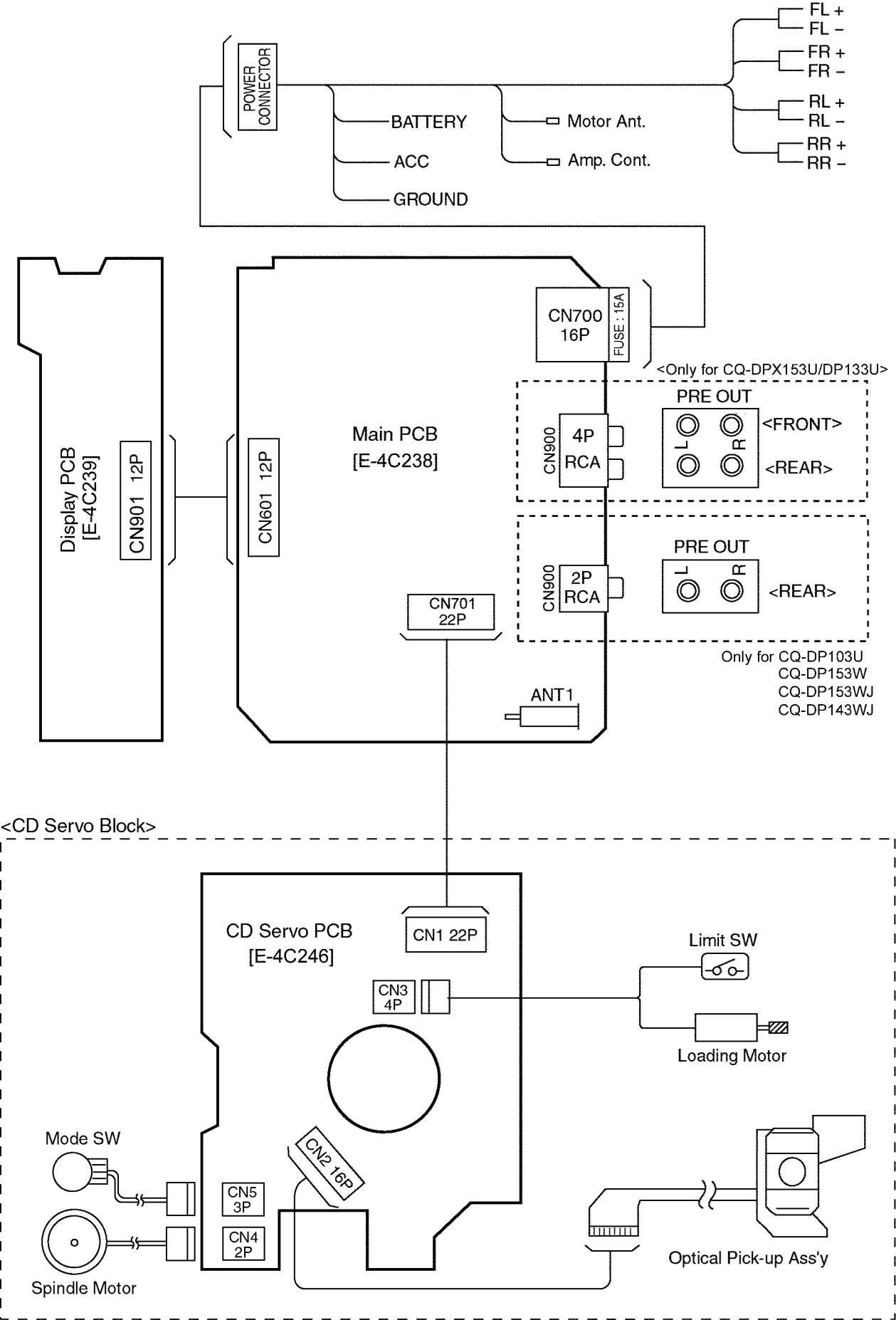
POWER CONNECTOR
BATTERY
ACC
GROUND
Motor Ant.
Amp. Cont.
FL +
FL –
FR +
FR –
RL +
RL –
RR +
RR –
Display PCB [E-4C239]
CN901 12P
CN601 12P
Main PCB [E-4C238]
CN700 16P
FUSE : 15A
<Only for CQ-DPX153U/DP133U>
PRE OUT
CN900
4P RCA
L
R
<FRONT>
<REAR>
PRE OUT
CN900
2P RCA
L
R
<REAR>
Only for CQ-DP103U
CQ-DP153W
CQ-DP153WJ
CQ-DP143WJ
CN701 22P
ANT1
<CD Servo Block>
CD Servo PCB [E-4C246]
CN1 22P
CN3 4P
Limit SW
Loading Motor
Mode SW
CN2 16P
CN5 3P
CN4 2P
Spindle Motor
Optical Pick-up Ass'y

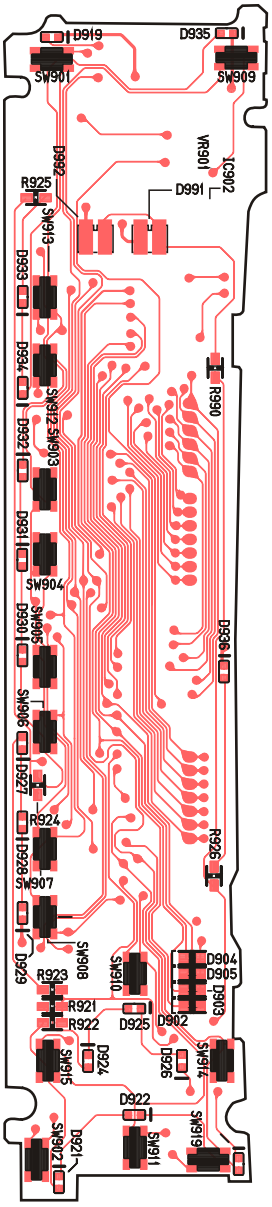

[E-4C239] [TOP VIEW]

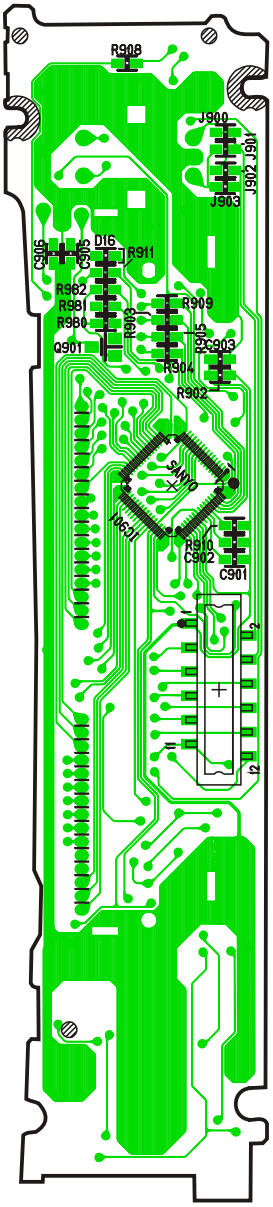

[E-4C239] [BOTTOM VIEW]

CQ-DP143WJ / DP153(W.WJ) Display PCB

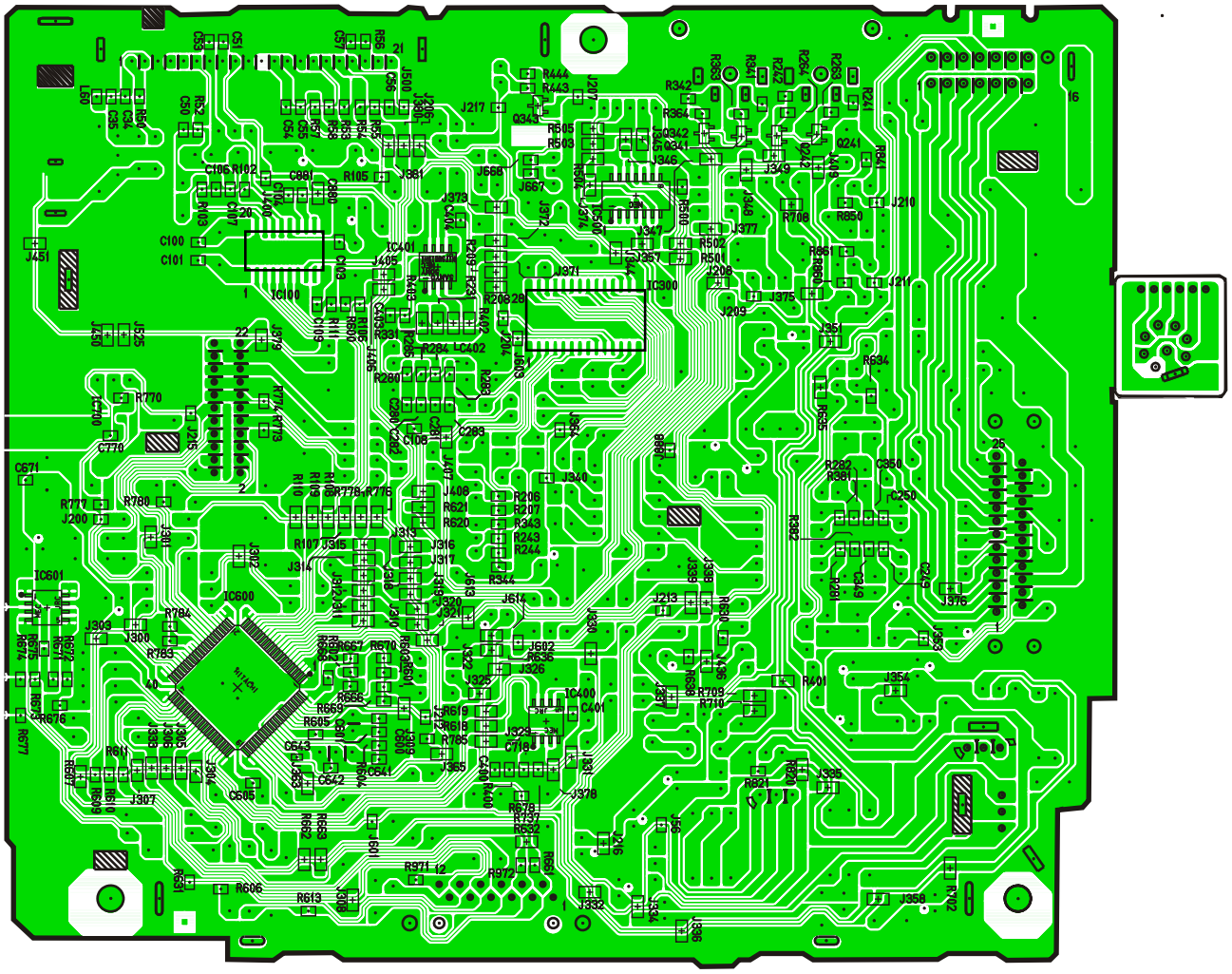

[E-4C238] [BOTTOM VIEW]

CQ-DP143WJ / DP153(W.WJ) Main PCB

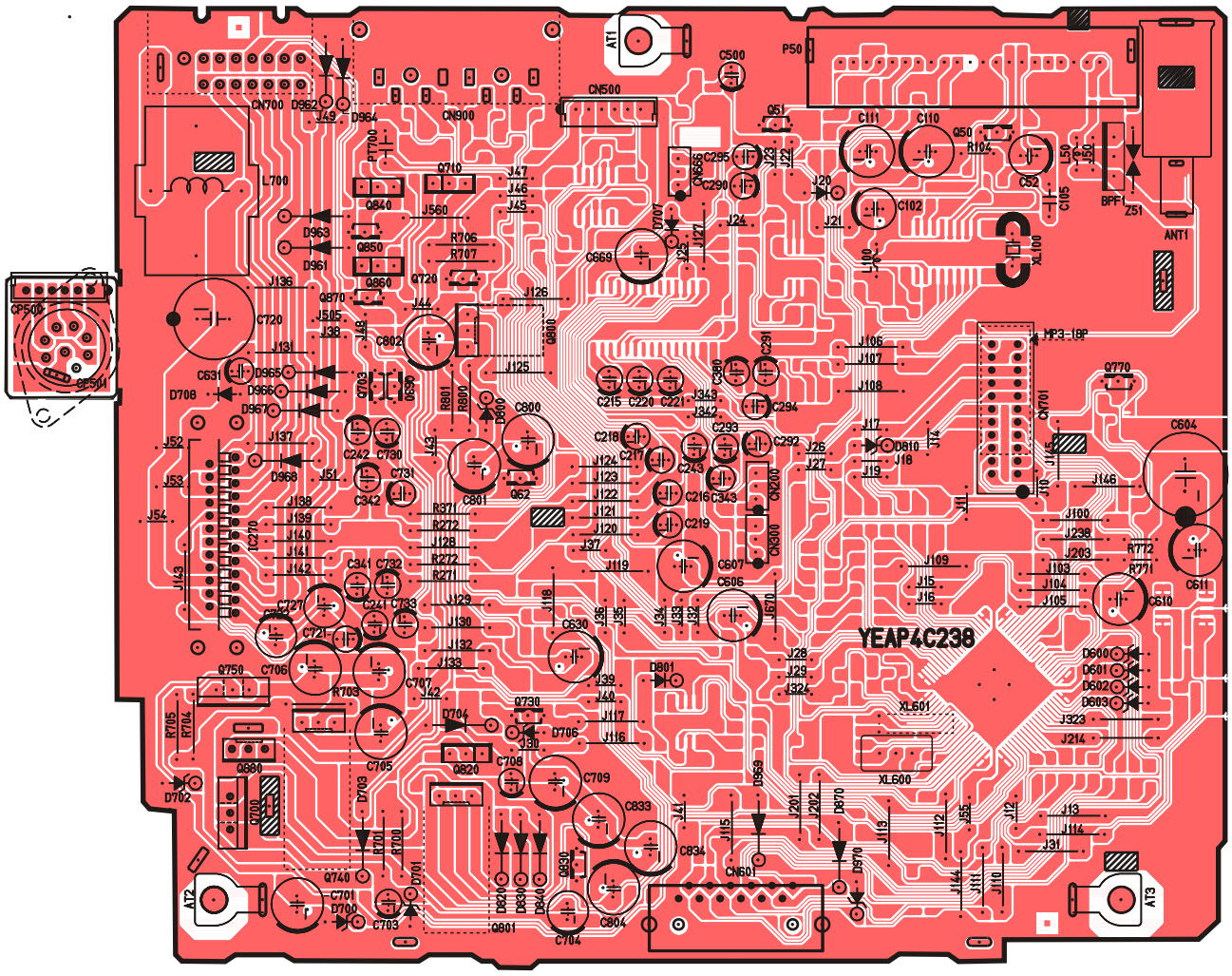

[E-4C238] [TOP VIEW]

CQ-DP143WJ / DP153(W.WJ) Main PCB