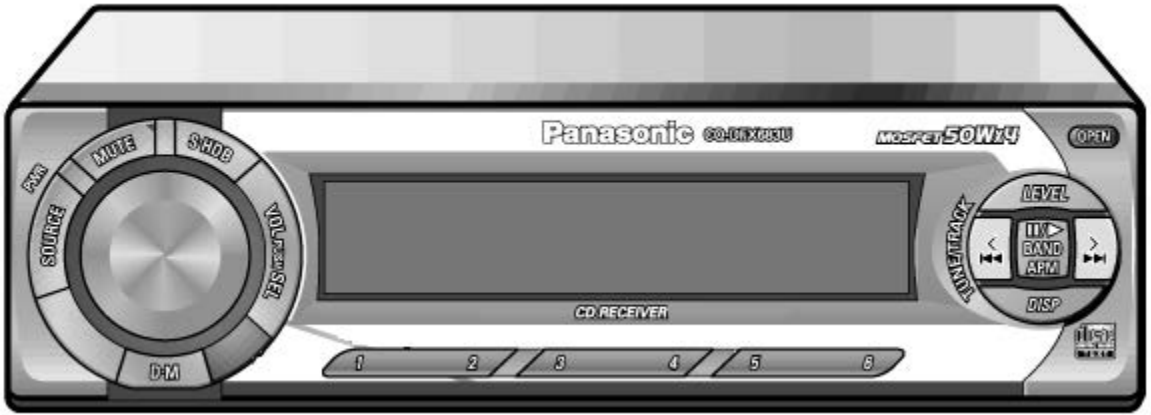
Panasonic
MOSFET 50W x 4
OPEN
PWR
MUTE
SHDB
SOURCE
VOL/PUSH SEL
D·M
LEVEL
TUNE/TRACK
BAND
APM
DISP
CD RECEIVER
1
2
3
4
5
6

Input
3
1
Output
ASO Limiter
Starter
Reference Voltage Circuit
Driver
Error
Amp.
Over-heat
Protector
Over-current
Protector
2
GND

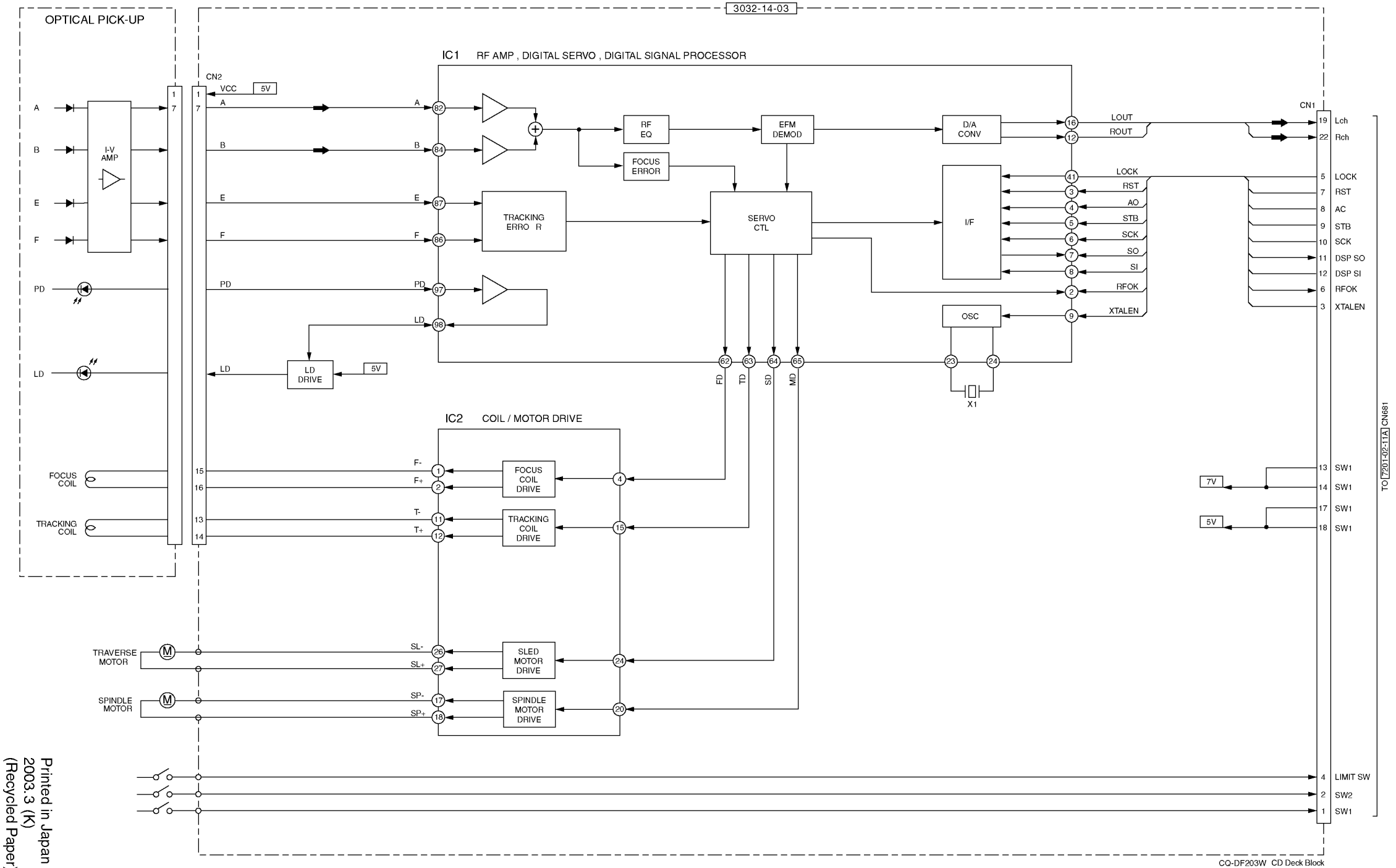

Printed in Japan
2003.3 (K)
(Recycled Paper)

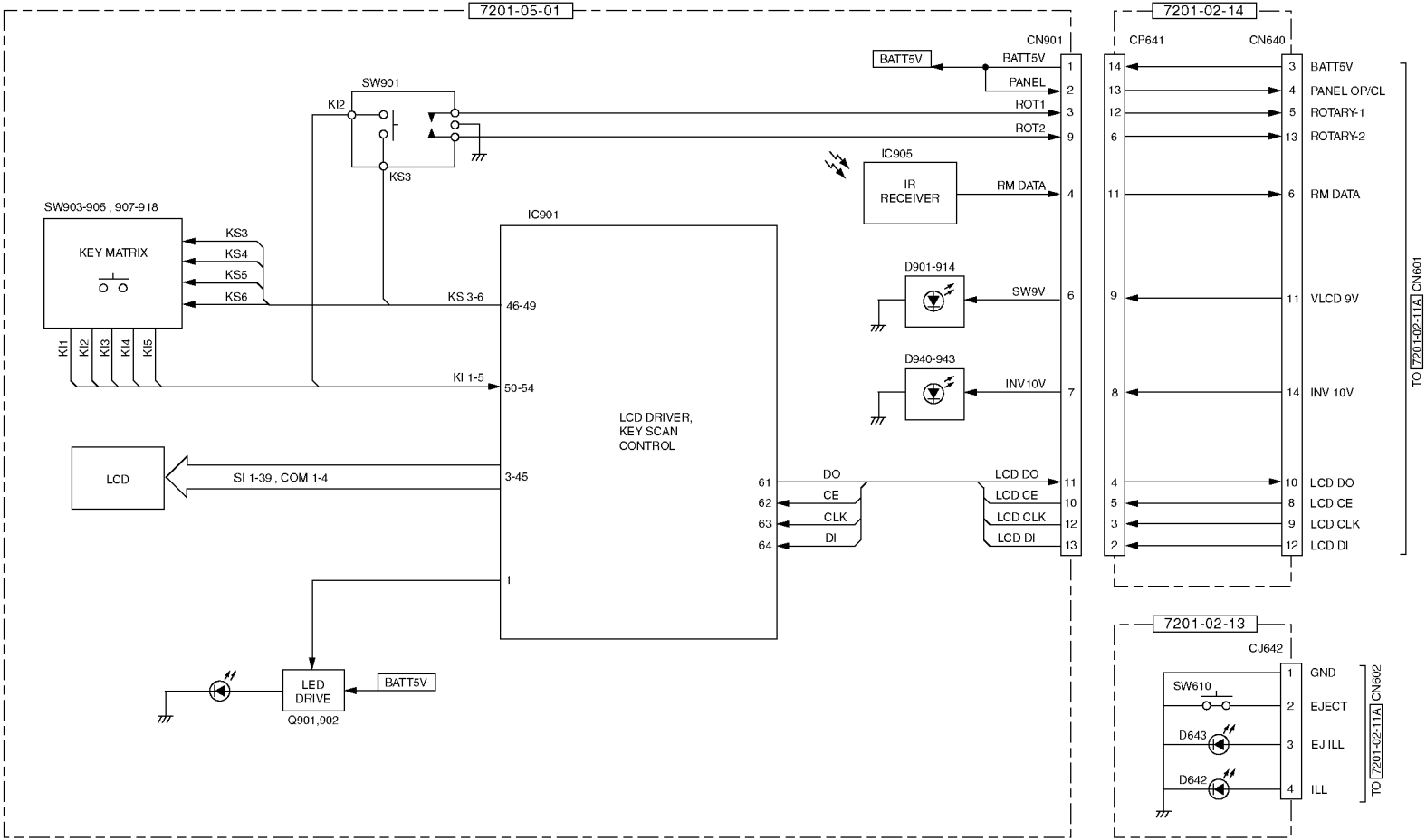

CQ-DF203W Display / Connector / Eject Block

7201-02-11A

ANT ANT51 L51 AM ANT FM ANT

PA51 FM/AM TUNER PACK
AM RF AMP
FM RF AMP
AM IN
FM IN
RF AGC
RF AGC
Lch Out
Rch Out
FM DET Out

Lch RADIO Rch

8V Q65 MODE SW AM/FM

FM/AM OSC IF OUT SD/S VSM FM DET FM ST/MONO TUNER CONTROL

IC201
IC201 AUDIO SELECT TONE CONTROL
AC OUT L AC OUT R AC IN L AC IN R
RADIO L RADIO R
CD L CD R BEEP
INPUT MULTIPLEXER
GAIN/AUTOZERO
MIX
MIXING STAGE
LOUDNESS VOLUME SOFT MUTE TREBLE BASS
MONO FADER
ZERO CROSS
BEEP
DIGITAL CONTROL I²C-BUS
I²C SCL SDA

IC271
POWER AMP
Q362 Q262 Q366 Q266
FL FR RL RR
AMP SW ANT SW AMP MUTE AMP CNT ACC BATT

CN701
FL(+) FL(-) FR(+) FR(-) RL(+) RL(-) RR(+) RR(-)

AF MUTE Q660,661 MUTE DRIVE

J1
F. Lch F. Rch R. Lch R. Rch
PRE OUT

IC401
IC401 PLL
REFERENCE DIVIDER
PHASE DETECTOR CHARGE PUMP
SWALLOW COUNTER
UNIVERSAL COUNTER
DATA SHIFT REGISTER LATCH
C²B I/F
Q411 LPF
XL401
FM OSC
FM IN
CE DI CLK DO
MONO AM/FM
Q52,54 MONO SW
FM ST/MONO
PLL CONTROL

IC280 BUFF

CN681
CDL CDR 5V 5V 8V 8V DSP S0 DSP SI CD STB CD SCK CD RST CD A0 LOCK RFOK CD OSC STP LIMIT SW1 SW2
CD CONTROL
To [2002-14-03] CN1

IC783 +5V REG
IC781 +9V REG
Q781,782 POWER SW
BATT 12V
CD CNT
D713

IC702 RESET
IC701 BATT DET
ACC
BATT 5V
VDD 5V
Q701,D703 +5V REG
D702
BATT

10V D709 VCC 5V +5V REG Q709,D711
Q708,D714 +10V REG
D707
Q703,704 POWER SW
MAIN CNT

8V
+B ON
LPF 9V D719 IC719 +9V REG
Q705,D708 +8V REG
BATT 12V

I²C
AF MUTE
LEVEL L
BATT ACC RESET
80
62 77 60

BZ OUT 15
TUNER CONTROL
PLL CONTROL
CD CONTROL
DISPLY CONTROL
CD CNT
56
IC601
CPU
57 MAIN CNT
23 AMP MUTE
22 ANT CNT
21 ANP CNT
X1 70 XL601 X2 69
55
48
LCD 5V CNT

CN601
INV 10V VLCD 9V VDD 5V PANEL OP/CL ROTARY 1 REMO DATA LCD CE LCD CLK LCD DO LCD DI ROTARY 2
DISPLAY CONTROL
To [7201-02-14] CN640

IC761 +10V REG
Q760,761 INV SW
BATT5V
INV. CNT
Q670 LCD 5V SW
BATT5V

CN602
EJECT EJ ILL ILL
To [7201-02-13] CN642

Q644 EJ ILL SW
EJ ILL
Q645,646 ILL SW
ILL CNT
D601
Q642
S.LED
PANEL SW
SW601
BATT 5V

EJ ILL
ILL CNT
S. LED
PANEL SW
EJECT
CHANGER CONTROL

Q720,721 AMP SW
AMP CNT
Q722,723 ANT SW
ANT CNT
+B ON

+B ON D650 ACC SENS CH. REM CLK STRB DATA
CHANGER CONTROL
IC650

7201-02-11A
CN661 (CP661) CN680
ACC SENS CH. REM CLK STRB DATA
3.6 7 5 2 4 1

CQ-DF203W Main Block

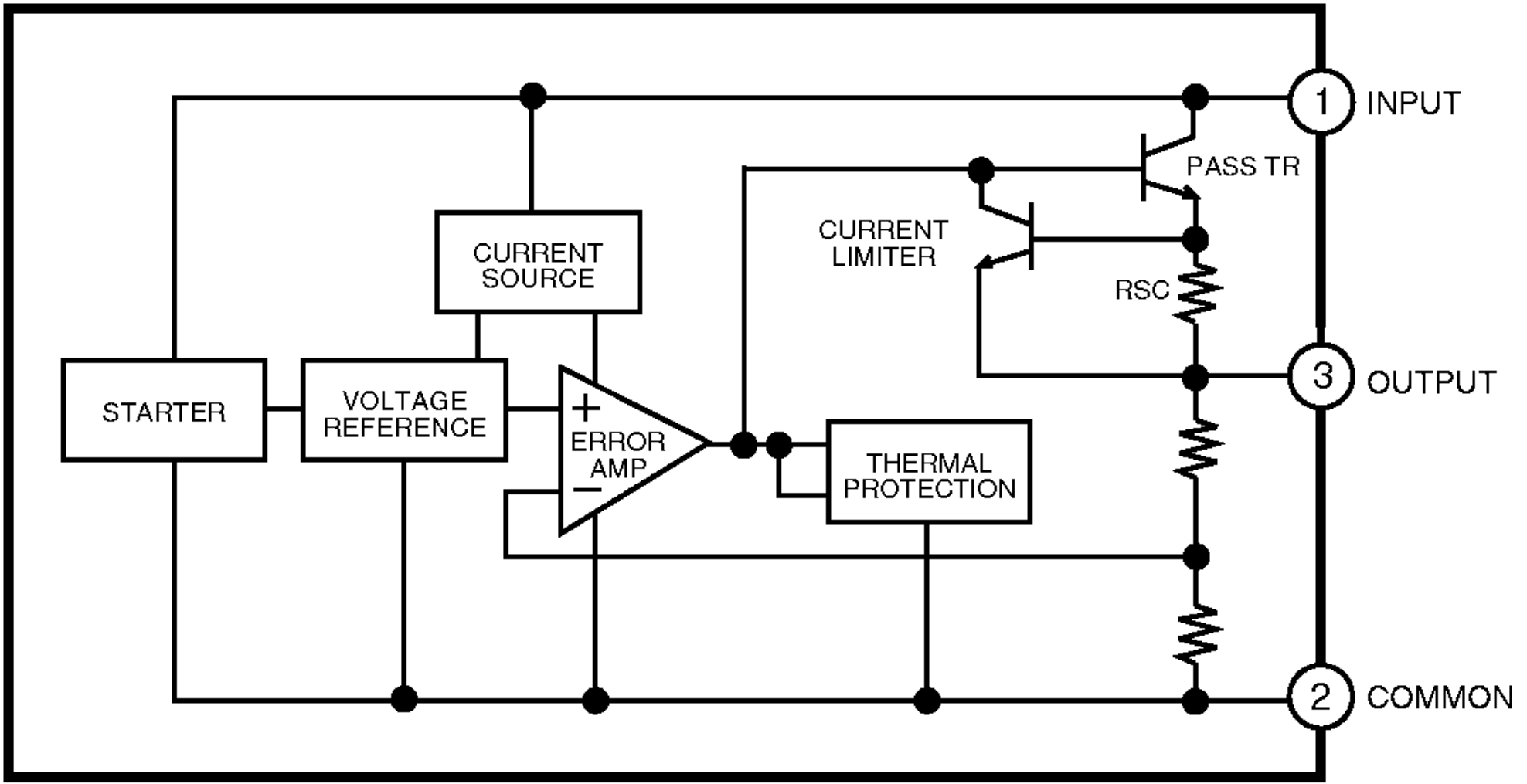
1
INPUT
PASS TR
CURRENT
LIMITER
CURRENT
SOURCE
RSC
3
OUTPUT
STARTER
VOLTAGE
REFERENCE
+
ERROR
AMP
−
THERMAL
PROTECTION
2
COMMON

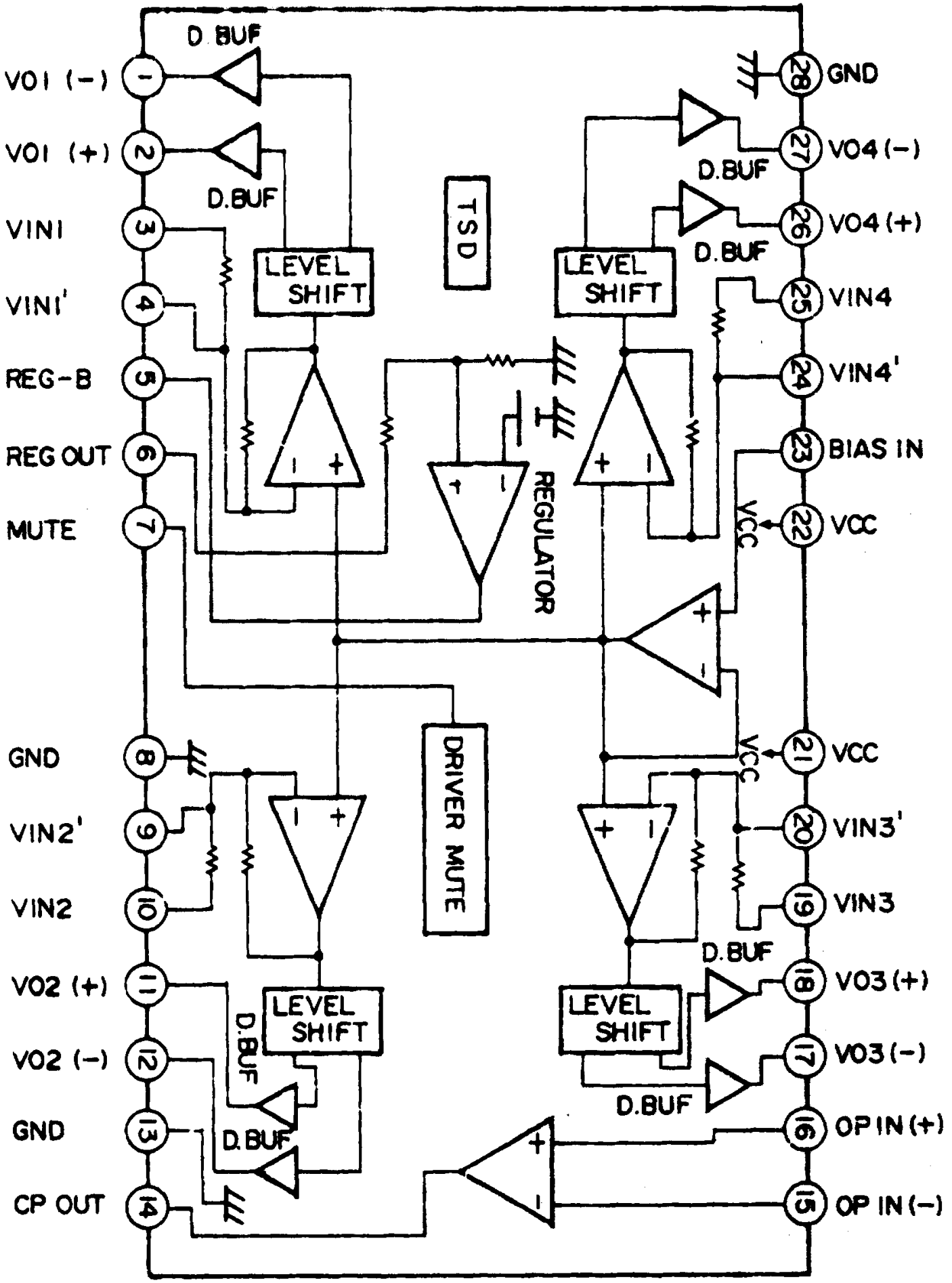
VO1 (-)
VO1 (+)
VIN1
VIN1'
REG-B
REG OUT
MUTE
GND
VIN2'
VIN2
VO2 (+)
VO2 (-)
GND
CP OUT
D. BUF
D.BUF
LEVEL SHIFT
TSD
REGULATOR
DRIVER MUTE
VCC
GND
VO4 (-)
VO4 (+)
VIN4
VIN4'
BIAS IN
VCC
VCC
VIN3'
VIN3
VO3 (+)
VO3 (-)
OP IN (+)
OP IN (-)

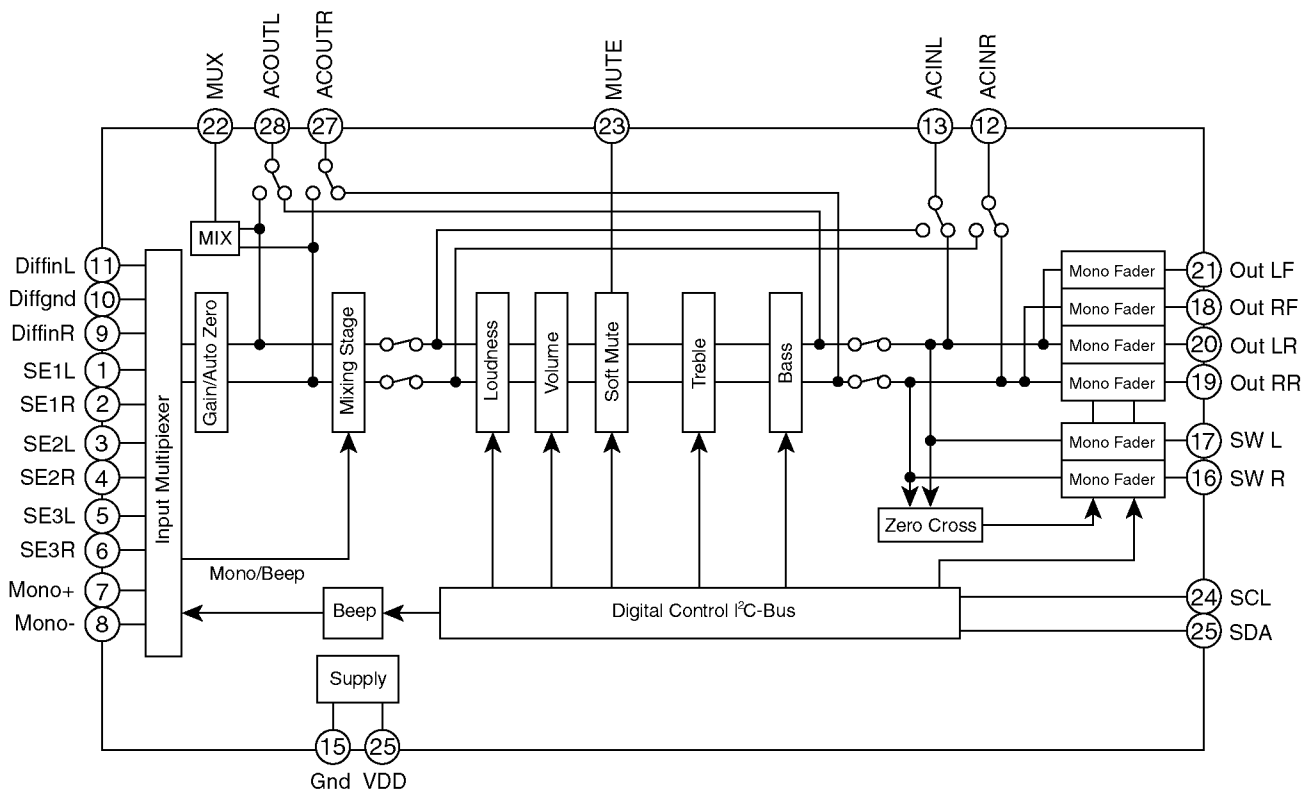
MUX
ACOUTL
ACOUTR
MUTE
ACINL
ACINR
22
28
27
23
13
12
MIX
DiffinL
Diffgnd
DiffinR
SE1L
SE1R
SE2L
SE2R
SE3L
SE3R
Mono+
Mono-
11
10
9
1
2
3
4
5
6
7
8
Input Multipiexer
Gain/Auto Zero
Mixing Stage
Loudness
Volume
Soft Mute
Treble
Bass
Mono Fader
Mono Fader
Mono Fader
Mono Fader
Mono Fader
Mono Fader
21
18
20
19
17
16
Out LF
Out RF
Out LR
Out RR
SW L
SW R
Zero Cross
Mono/Beep
Beep
Digital Control I²C-Bus
24
25
SCL
SDA
Supply
15
25
Gnd
VDD

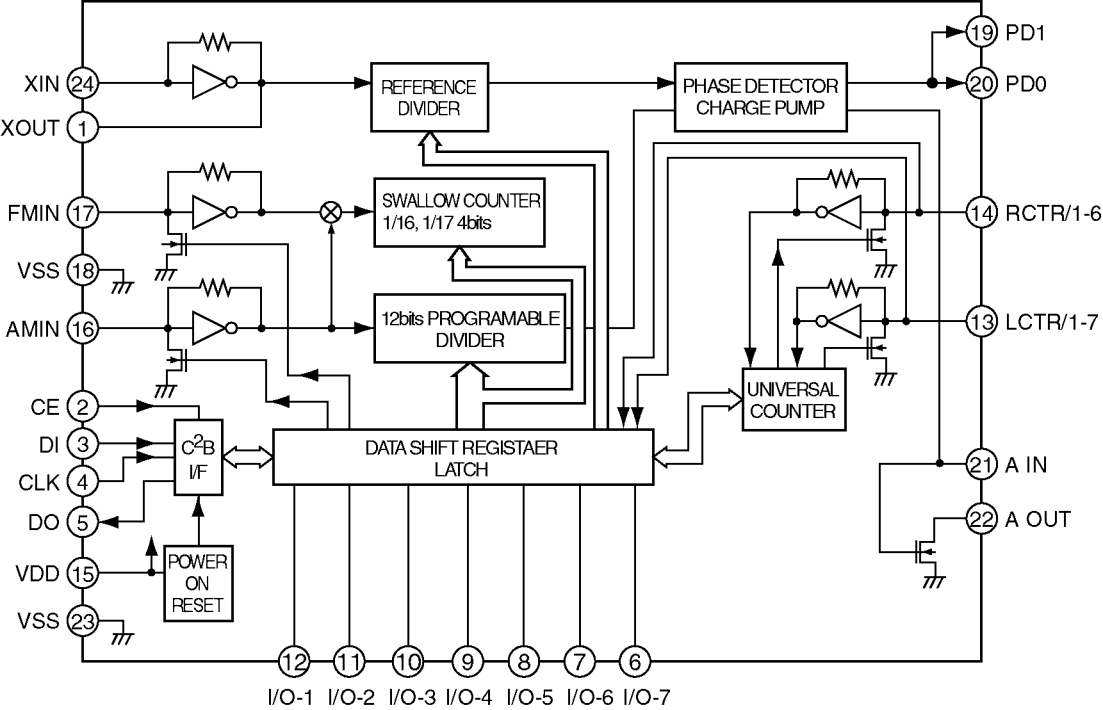
XIN 24
XOUT 1
FMIN 17
VSS 18
AMIN 16
CE 2
DI 3
CLK 4
DO 5
VDD 15
VSS 23
REFERENCE DIVIDER
PHASE DETECTOR CHARGE PUMP
SWALLOW COUNTER 1/16, 1/17 4bits
12bits PROGRAMABLE DIVIDER
C2B I/F
DATA SHIFT REGISTAER LATCH
POWER ON RESET
UNIVERSAL COUNTER
19 PD1
20 PD0
14 RCTR/1-6
13 LCTR/1-7
21 A IN
22 A OUT
12 I/O-1
11 I/O-2
10 I/O-3
9 I/O-4
8 I/O-5
7 I/O-6
6 I/O-7

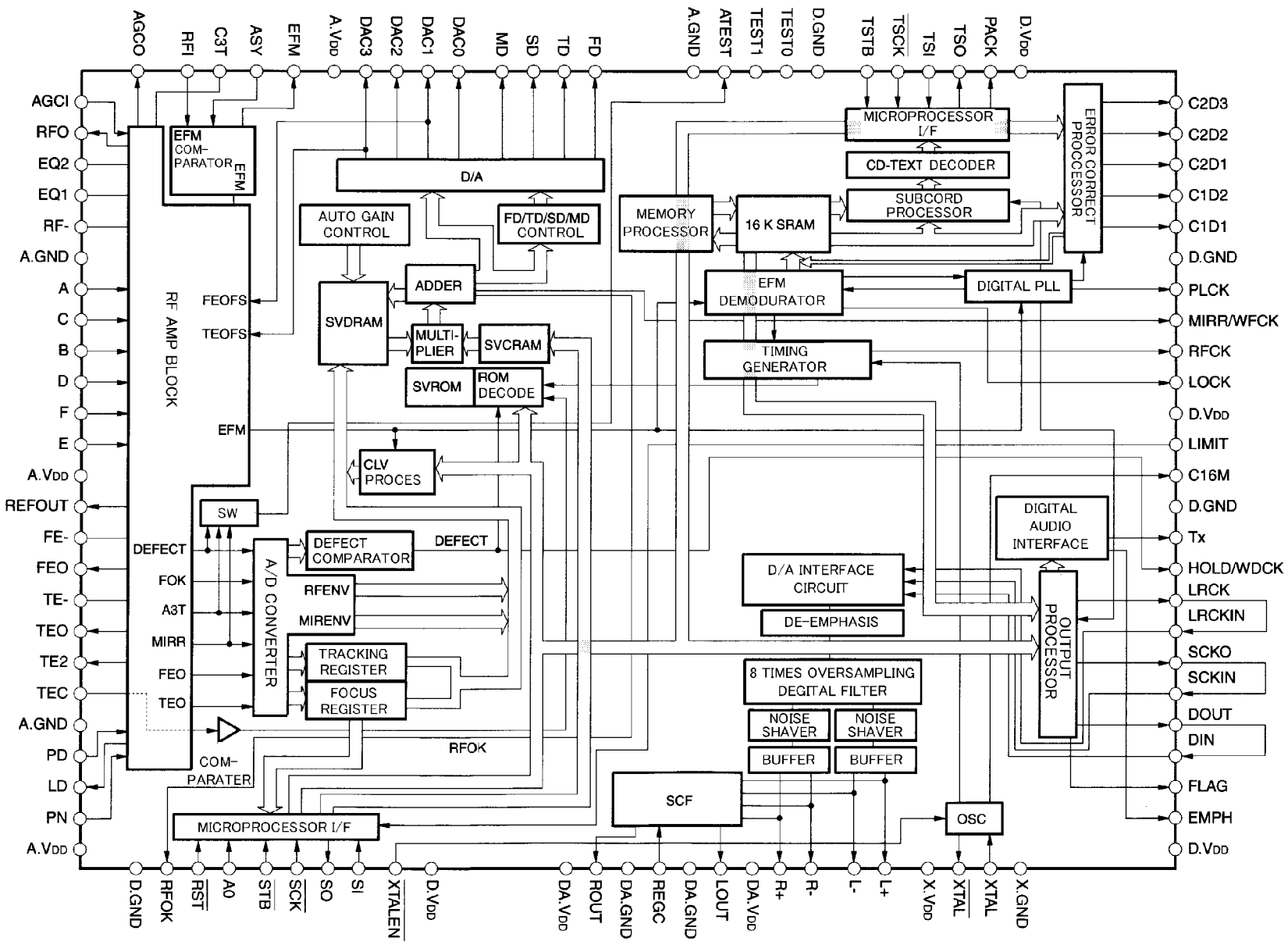
AGCO
RFI
C3T
ASY
EFM
A.VDD
DAC3
DAC2
DAC1
DAC0
MD
SD
TD
FD
A.GND
ATEST
TEST1
TEST0
D.GND
TSTB
TSCK
TSI
TSO
PACK
D.VDD
AGCI
RFO
EQ2
EQ1
RF-
A.GND
A
C
B
D
F
E
A.VDD
REFOUT
FE-
FEO
TE-
TEO
TE2
TEC
A.GND
PD
LD
PN
A.VDD
C2D3
C2D2
C2D1
C1D2
C1D1
D.GND
PLCK
MIRR/WFCK
RFCK
LOCK
D.VDD
LIMIT
C16M
D.GND
Tx
HOLD/WDCK
LRCK
LRCKIN
SCKO
SCKIN
DOUT
DIN
FLAG
EMPH
D.VDD
RF AMP BLOCK
EFM COM-PARATOR
EFM
FEOFS
TEOFS
EFM
DEFECT
FOK
A3T
MIRR
FEO
TEO
COM-PARATER
RFOK
A/D CONVERTER
DEFECT COMPARATOR
DEFECT
RFENV
MIRENV
TRACKING REGISTER
FOCUS REGISTER
SW
CLV PROCES
D/A
AUTO GAIN CONTROL
FD/TD/SD/MD CONTROL
ADDER
SVDRAM
MULTI-PLIER
SVCRAM
SVROM
ROM DECODE
MICROPROCESSOR I/F
MEMORY PROCESSOR
16 K SRAM
MICROPROCESSOR I/F
CD-TEXT DECODER
SUBCORD PROCESSOR
ERROR CORRECT PROCESSOR
EFM DEMODURATOR
DIGITAL PLL
TIMING GENERATOR
DIGITAL AUDIO INTERFACE
D/A INTERFACE CIRCUIT
DE-EMPHASIS
OUTPUT PROCESSOR
8 TIMES OVERSAMPLING DEGITAL FILTER
NOISE SHAVER
NOISE SHAVER
BUFFER
BUFFER
SCF
OSC
D.GND
RFOK
RST
A0
STB
SCK
SO
SI
XTALEN
D.VDD
DA.VDD
ROUT
DA.GND
REGC
DA.GND
LOUT
DA.VDD
R+
R-
L-
L+
X.VDD
XTAL
XTAL
X.GND

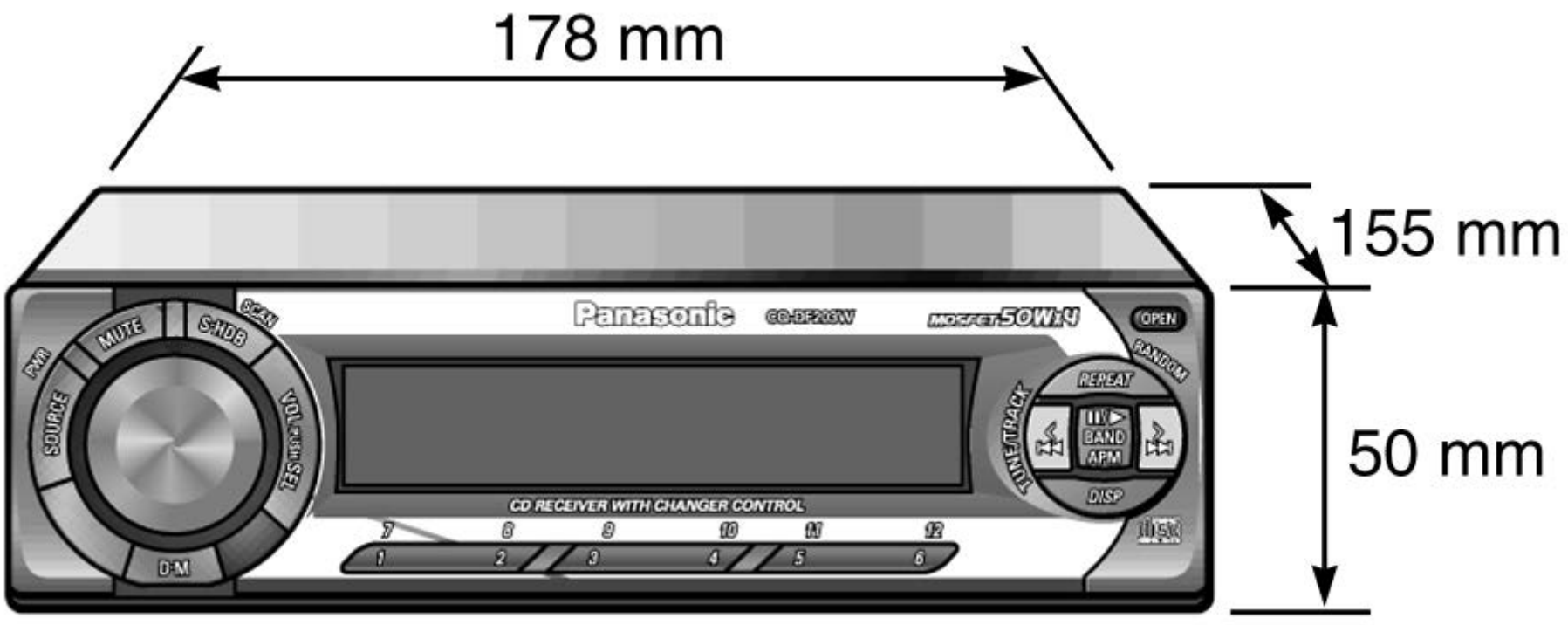
178 mm
155 mm
50 mm
Panasonic
CQ-DF203W
MOSFET 50W×4
OPEN
RANDOM
REPEAT
BAND
APM
DISP
TUNE/TRACK
SCAN
MUTE
S-HDB
PWR
SOURCE
VOL PUSH SEL
D-M
CD RECEIVER WITH CHANGER CONTROL
7
8
9
10
11
12
1
2
3
4
5
6

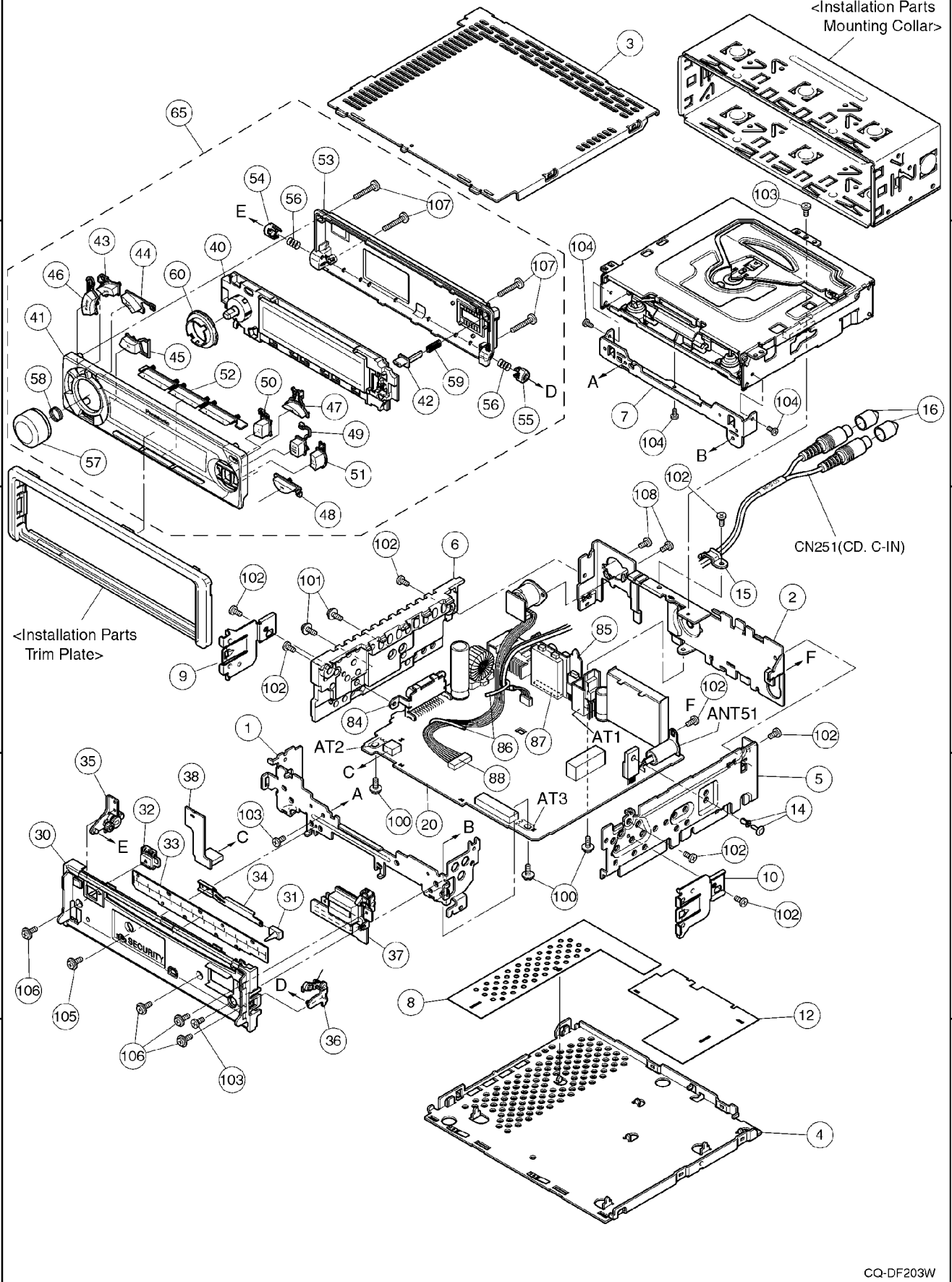
<Installation Parts
Mounting Collar>
<Installation Parts
Trim Plate>
CN251(CD. C-IN)
AT1
AT2
AT3
ANT51
CQ-DF203W

1
2
3
4
A
B
C
D
E
F
G
74
79
43
35
34
72
45
33
36
46
44
26
31
22
29
112
25
61
24
19
38
77
116
62
21
73
95
96
32
11
114
112
22
111
85
73
2
111
37
15
23
13
30
27
12
18
86
98
99
28
83
115
121
16
17
125
124
4
77
20
87
88
89
82
90
14
97
113
92
91
78
78
75
123
100
94
93
122
101
84
81
71
117
117
3
111
1

CAUTION:

This product utilizes a laser diode with the unit turned "on", laser radiation is emitted from the pickup lens.

Laser radiation from the pickup lens is safety level, but be sure the followings:

1. Do not disassemble the optical pickup unit, since radiation from exposed laser diode is dangerous.
2. Do not adjust the variable resistor on the pickup unit. It was already adjusted.
3. Do not look at the focus lens using optical instruments.
4. Recommend not to look at pickup lens for a long time.

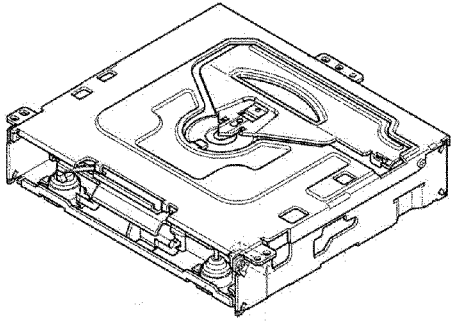

Deck Ass'y (Upper Side)

Caution

This Product utilizes a laser.

Use of controls or adjustments or performance of procedures other than those specified herein may result in hazardous radiation exposure.

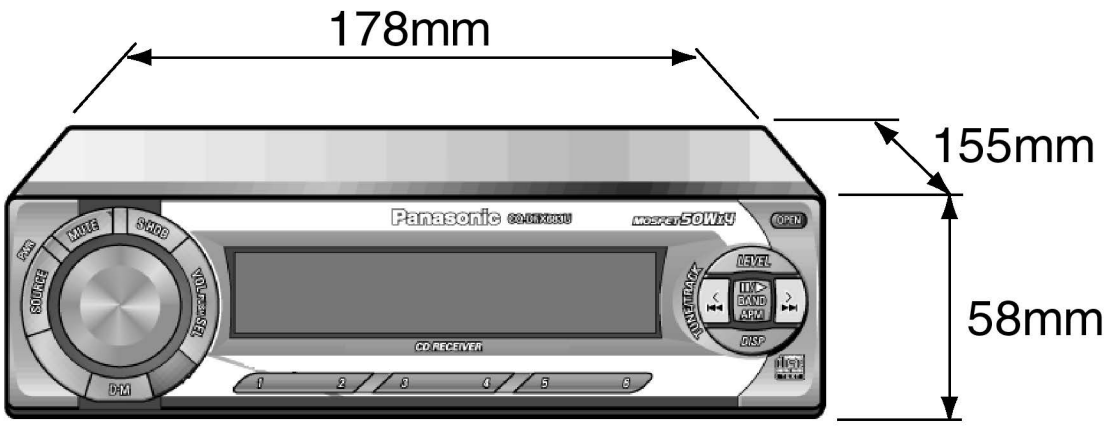
178mm
155mm
58mm
Panasonic
MOSFET 50W x 4
OPEN
MUTE
SHOB
PWR
SOURCE
VOLUME SEL
D·M
LEVEL
TONE/TRACK
BAND
ARM
DISP
CD RECEIVER
1
2
3
4
5
6

(ATT)
PWR
MUTE
MODE
VOL
PRG
BAND/DISC UP
TUNE
TRACK
Panasonic
Car Audio

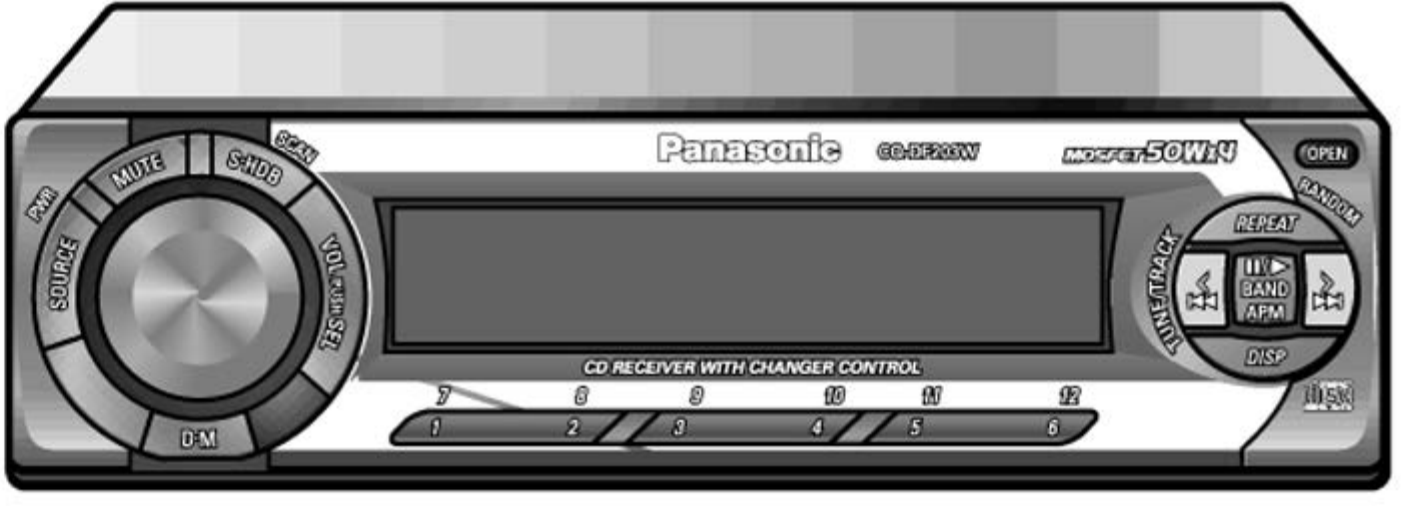
Panasonic
CQ-DF203W
MOSFET 50Wx4
OPEN
RANDOM
REPEAT
BAND
APM
DISP
TUNE/TRACK
PWR
MUTE
SCAN
S-NDB
SOURCE
VOL PUSH SEL
D-M
CD RECEIVER WITH CHANGER CONTROL
7
8
9
10
11
12
1
2
3
4
5
6

16.3. CD Servo Block

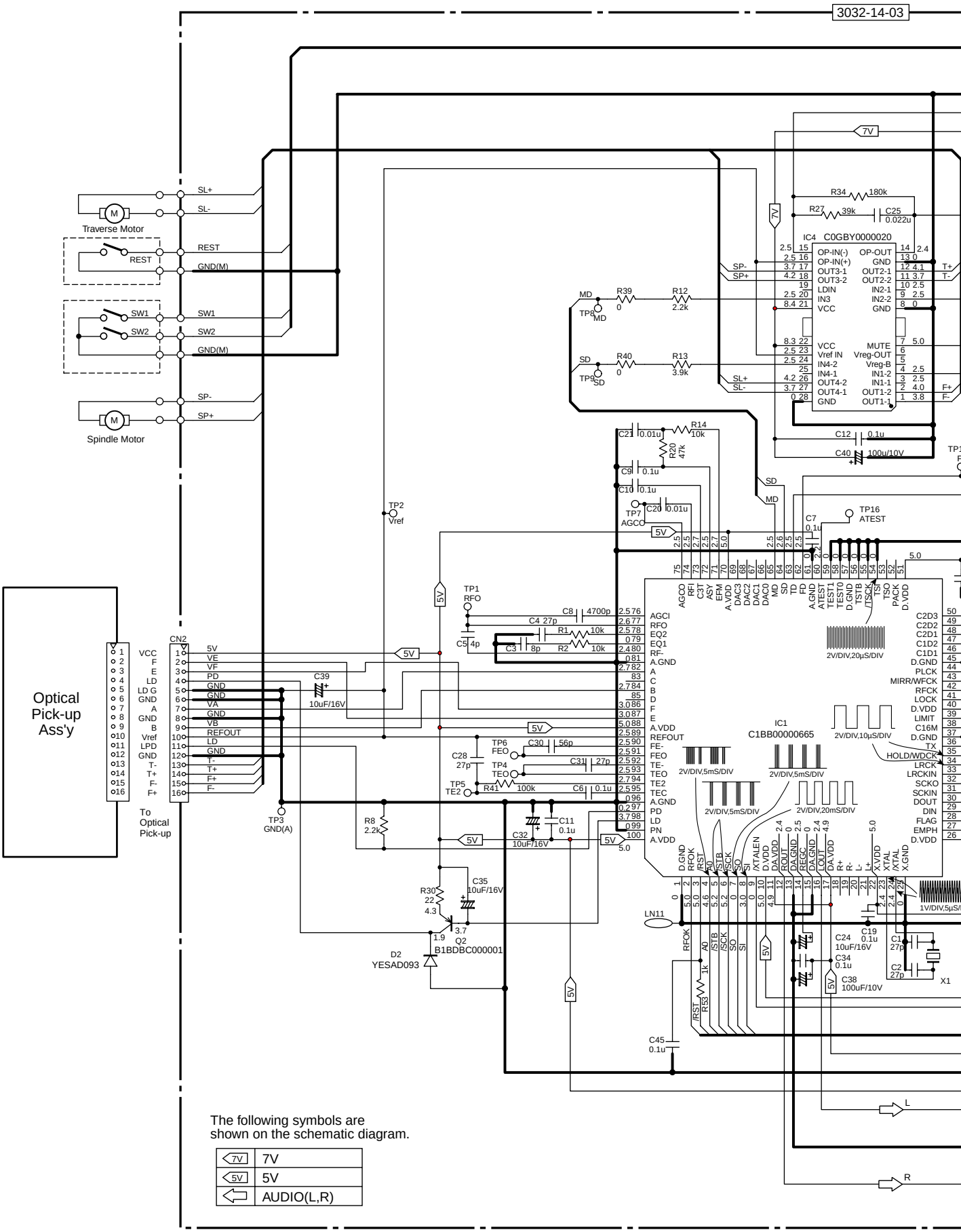

3032-14-03

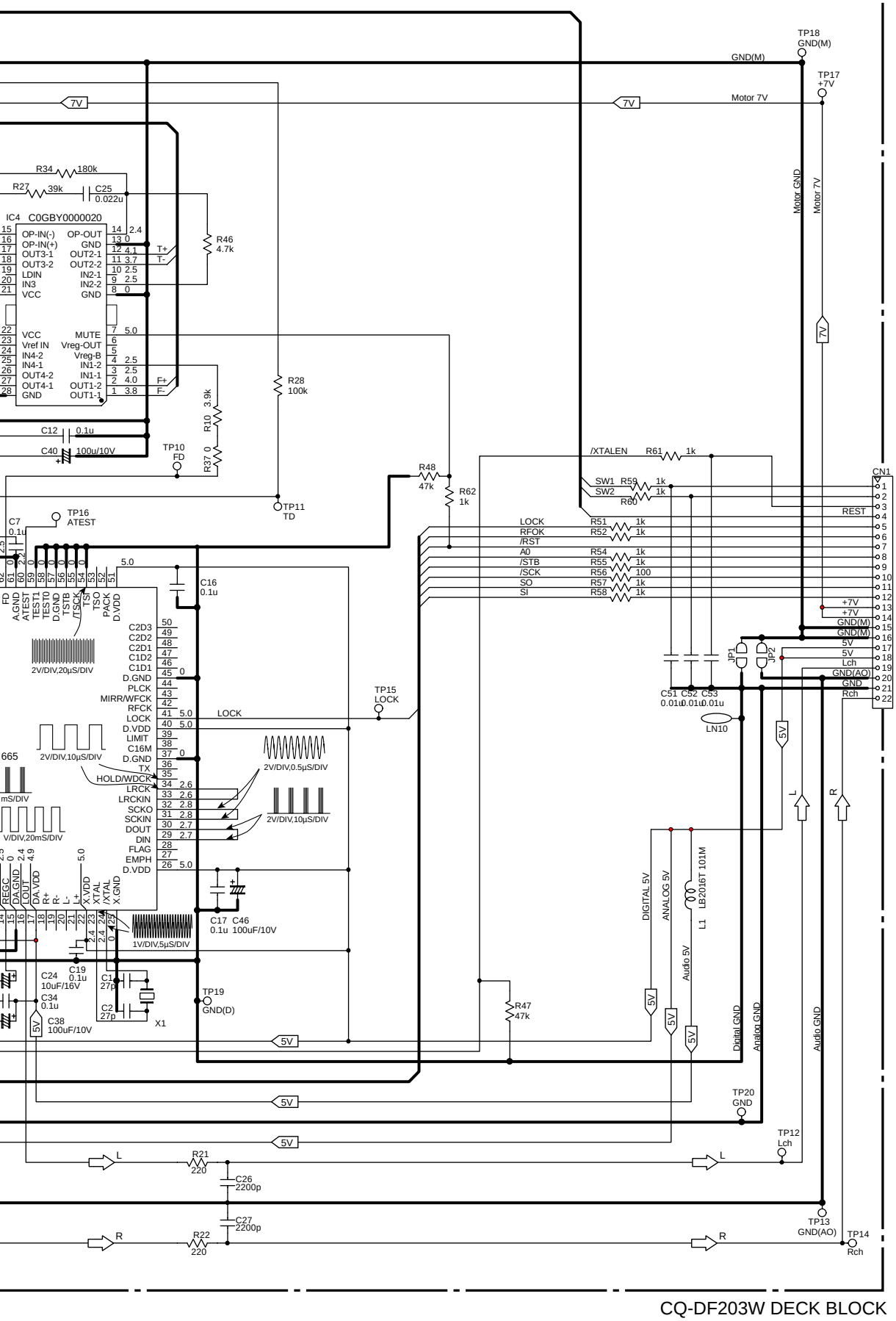

CQ-DF203W DECK BLOCK

16.4. Eject/ Connector Block

The following symbols are
shown on the schematic diagram.

10V	10V
9V	9V
5V	5V

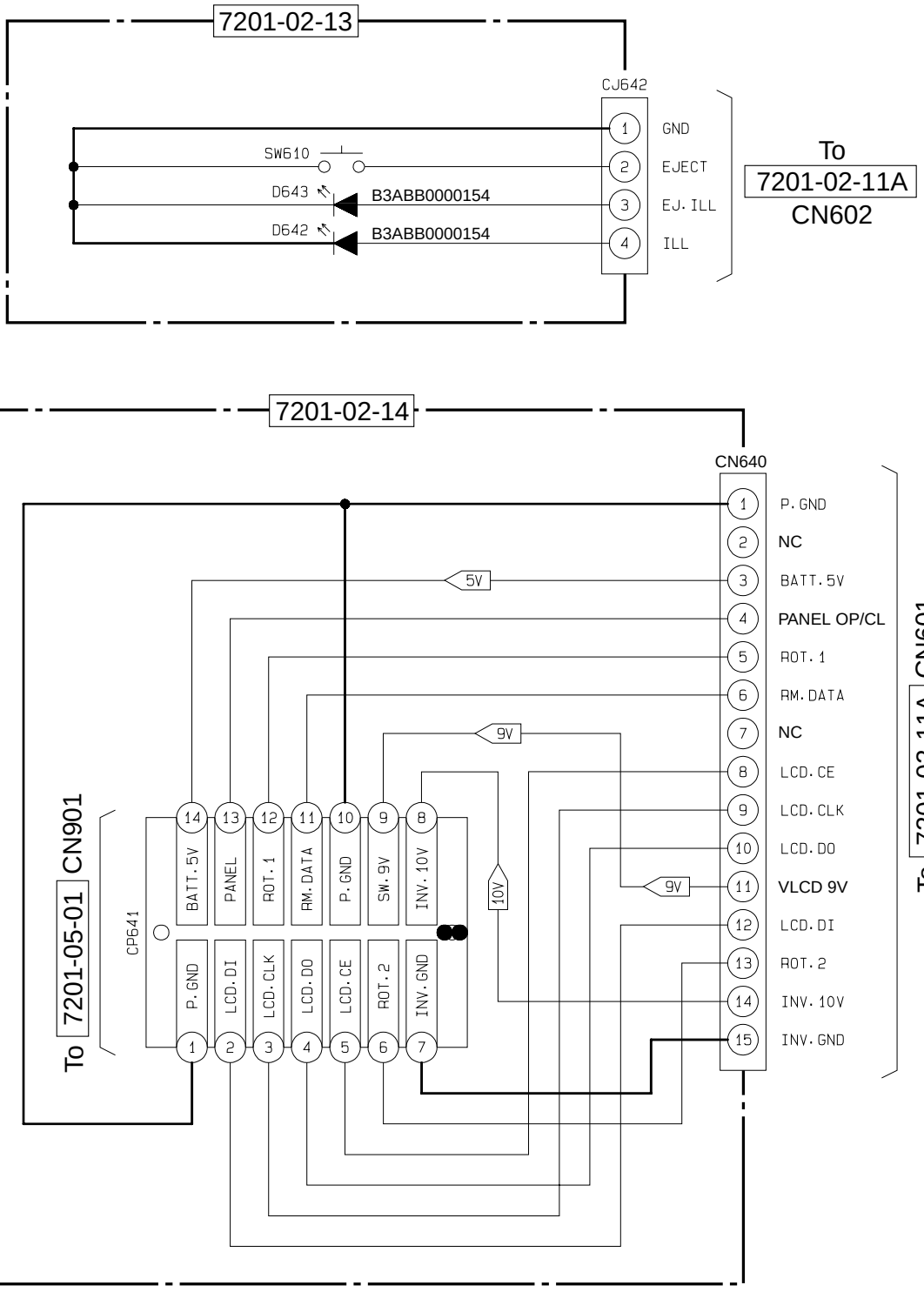

CQ-DF203W EJ/CON BLOCK

16.2. Display Block

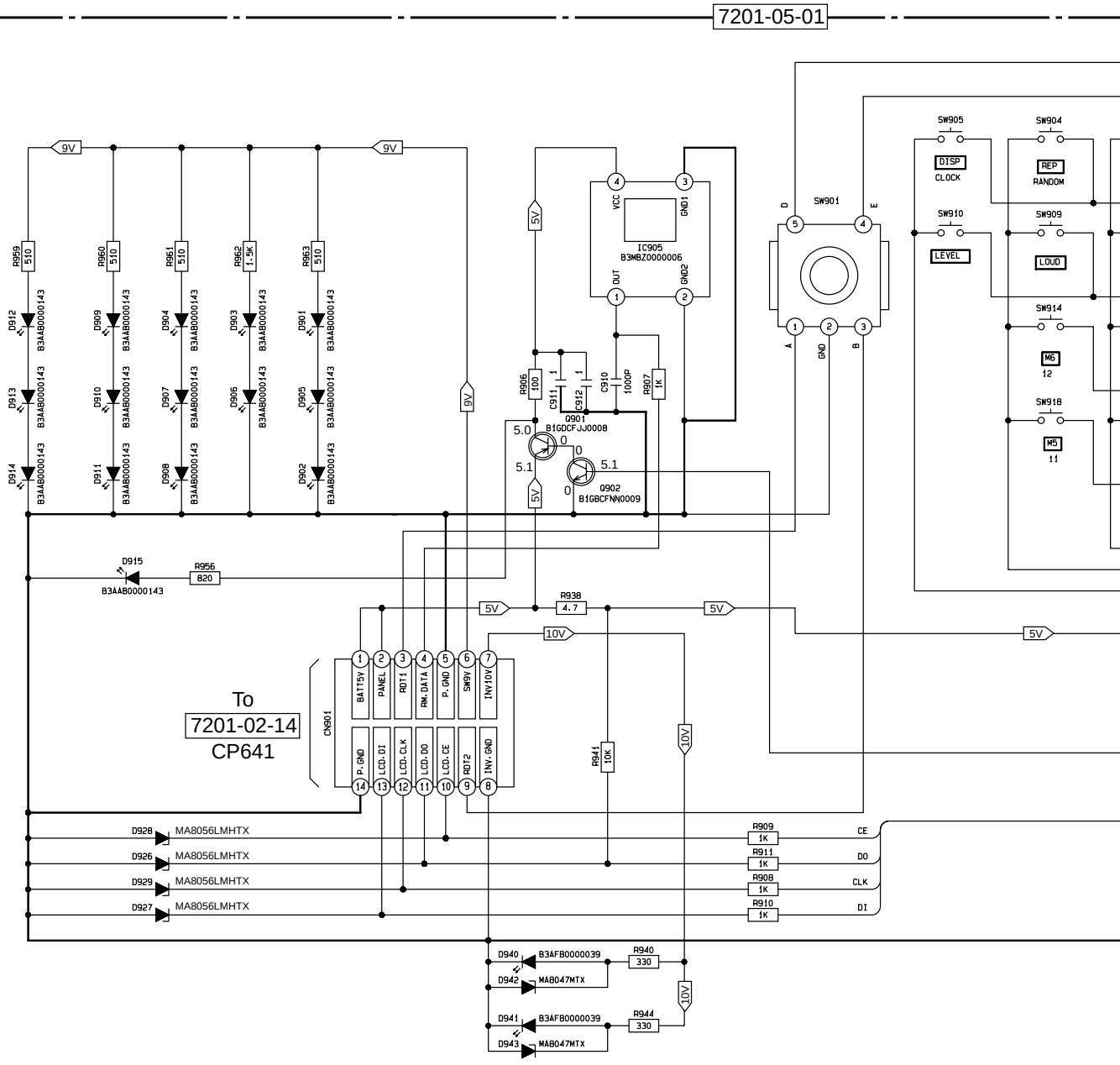

The following symbols are shown on the schematic diagram.

10V	10V
9V	9V
5V	5V

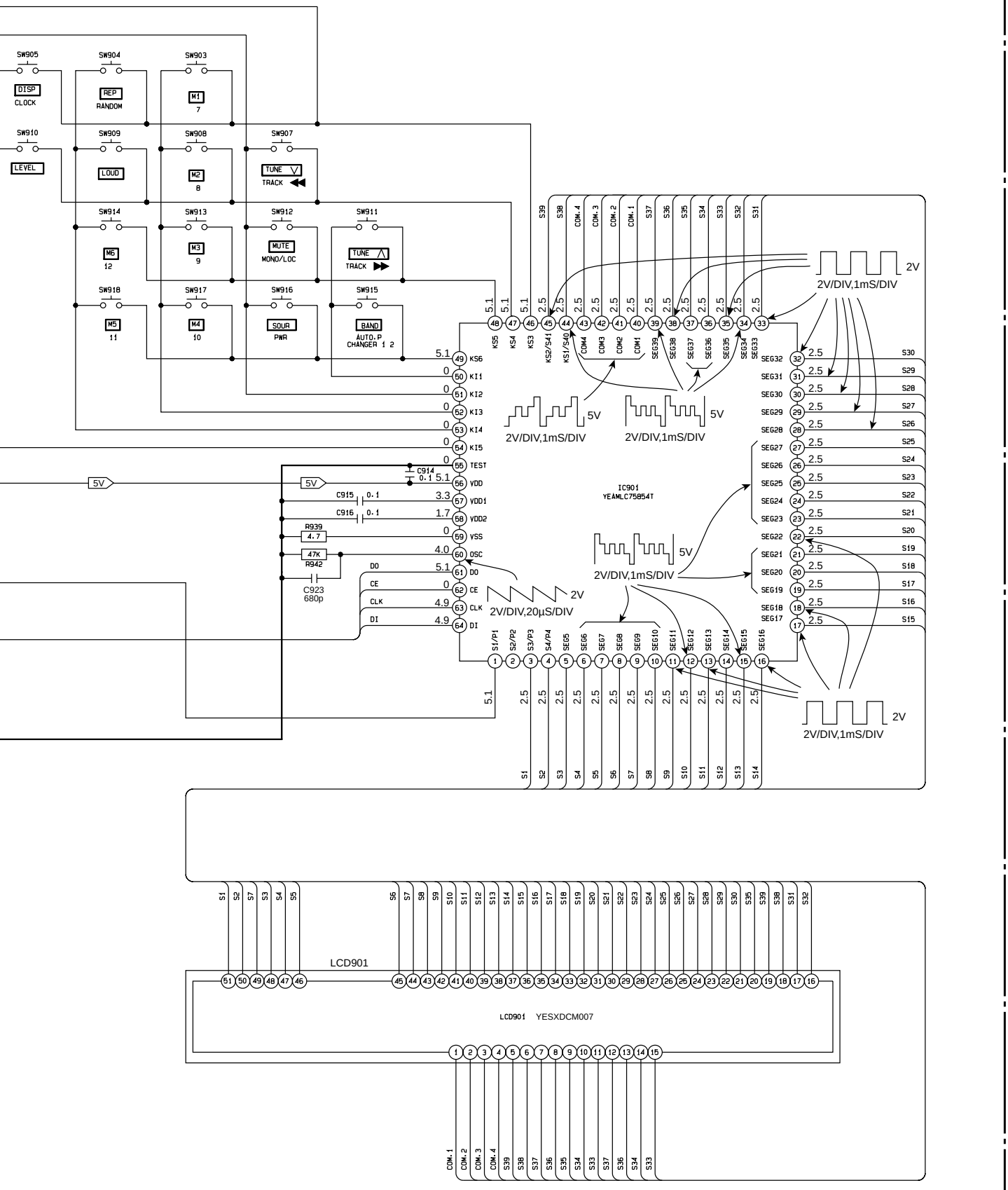
SW905
DISP
CLOCK
SW904
REP
RANDOM
SW903
M1
7
SW910
LEVEL
SW909
LOUD
SW908
M2
8
SW907
TUNE
TRACK
SW914
M6
12
SW913
M3
9
SW912
MUTE
MONO/LOC
SW911
TUNE
TRACK
SW918
M5
11
SW917
M4
10
SW916
SOUR
PWR
SW915
BAND
AUTO.P
CHANGER 1 2
IC901
YEAMLC758541
2V
2V/DIV,1mS/DIV
5V
2V/DIV,1mS/DIV
2V/DIV,20µS/DIV
C914 0.1
C915 0.1
C916 0.1
R939 4.7
47K R942
C923 680p
LCD901
LCD901 YESXDCM007

16 SCHEMATIC DIAGRAM

16.1. Main Block

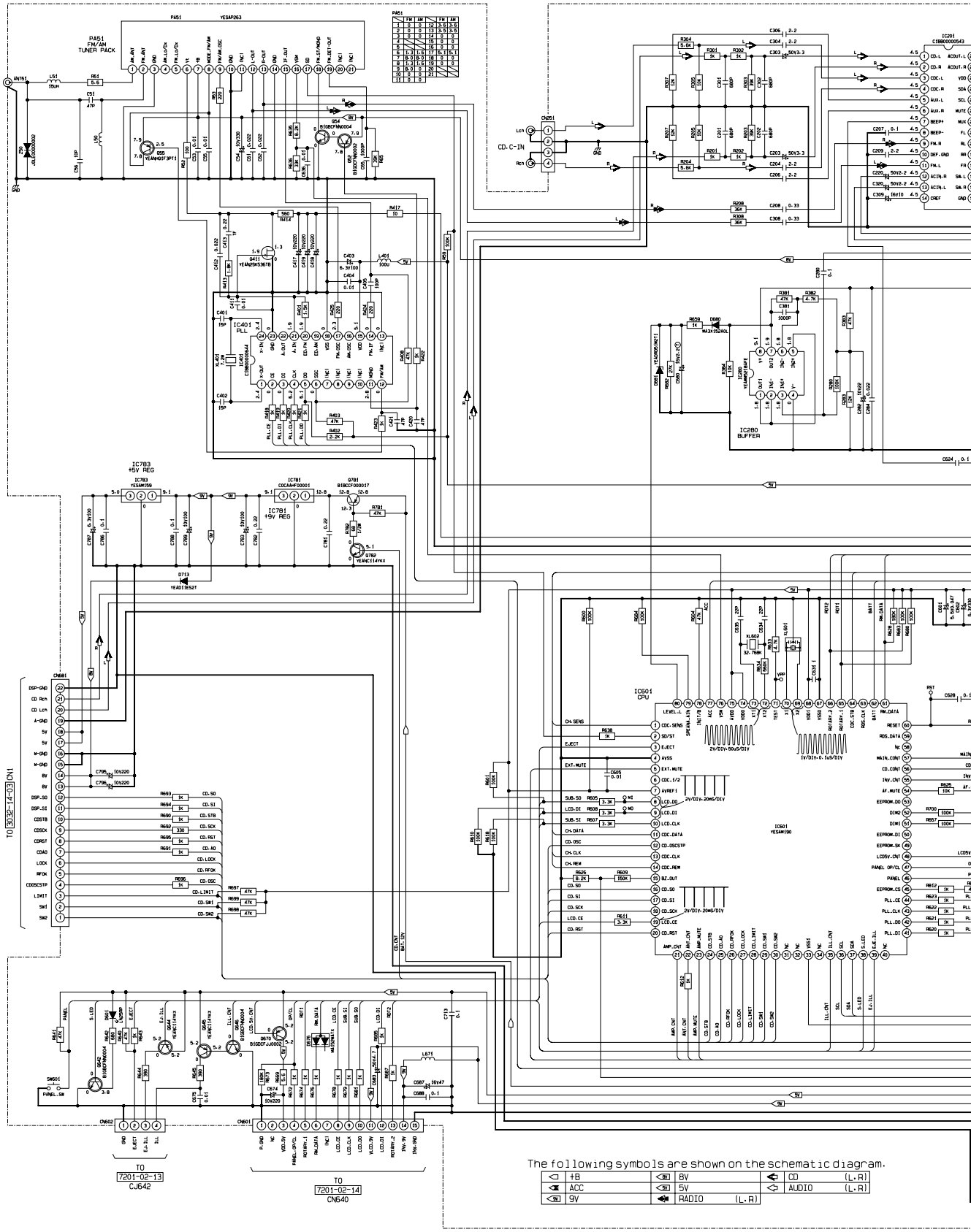

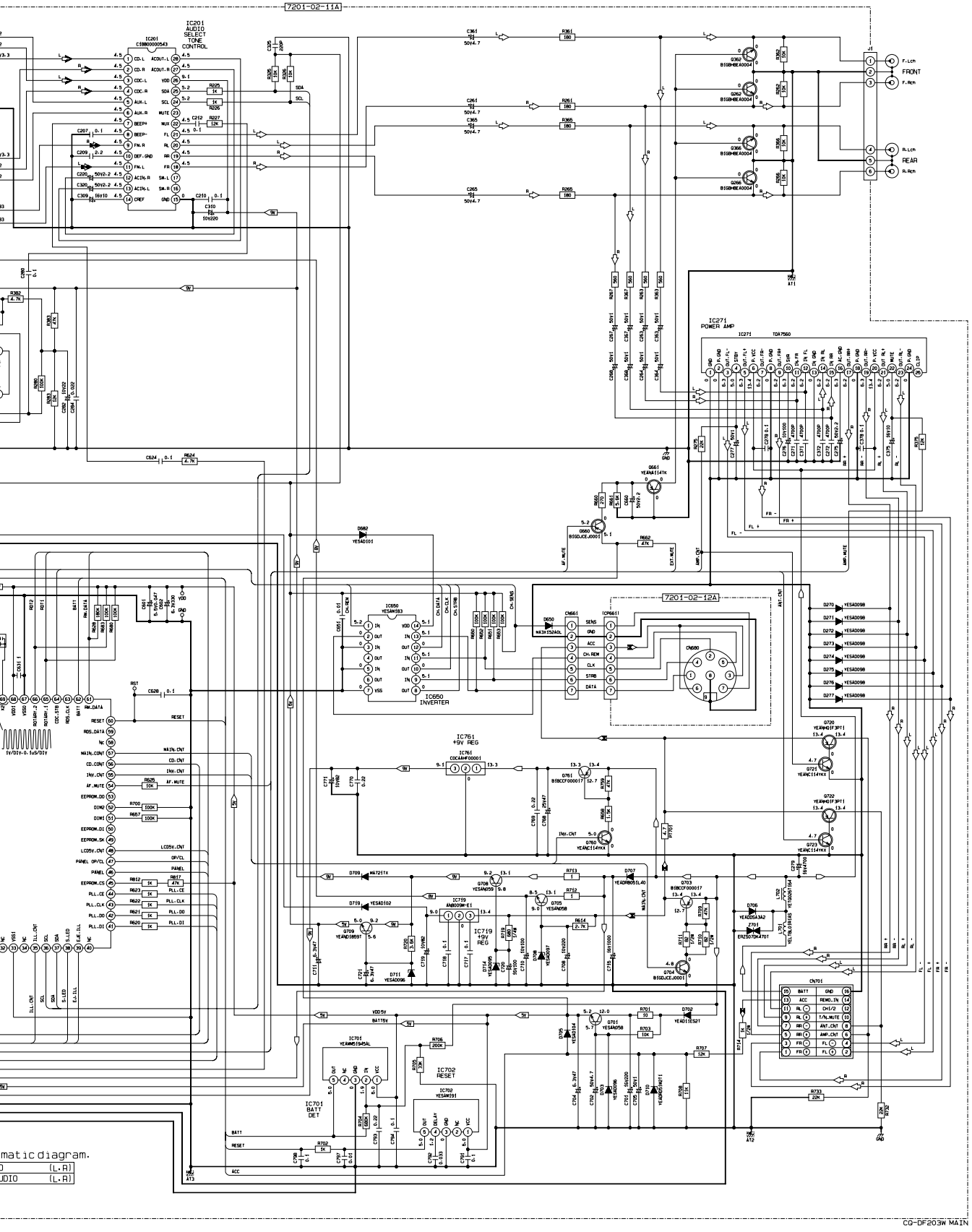
7201-02-11A
IC201
AUDIO
SELECT
TONE
CONTROL
IC271
POWER AMP
TDA7560
FRONT
REAR
7201-02-12A
IC650
INVERTER
IC761
+9V REG
IC719
+9V
REG
IC701
BATT
DET
IC702
RESET
CN701
matic diagram.
(L·R)
(L·R)
CQ-DF203W MAIN

Traverse Motor
SL+
SL-
REST
GND(M)
SW1
SW2
Spindle Motor
SP-
SP+

IC4 C0GBY0000020
OP-IN(-) OP-IN(+) OUT3-1 OUT3-2 LDIN IN3 VCC
OP-OUT GND OUT2-1 OUT2-2 IN2-1 IN2-2 GND
VCC Vref IN IN4-2 IN4-1 OUT4-2 OUT4-1 GND
MUTE Vreg-OUT Vreg-B IN1-2 IN1-1 OUT1-2 OUT1-1
SP- SP+ SL+ SL- T+ T- F+ F-

IC1 C1BB00000665

CN2 1 VCC 2 F 3 E 4 LD 5 LD G 6 GND 7 A 8 GND 9 B 10 Vref 11 LPD 12 GND 13 T- 14 T+ 15 F- 16 F+
5V VE VF PD GND GND VA GND VB REFOUT LD GND T- T+ F+ F-
To Optical Pick-up

Optical Pick-up Ass'y

CN1 1 SW1 2 SW2 3 /XTALEN 4 LIMIT SW 5 LOCK 6 RFOK 7 /RST 8 AC 9 /STB 10 /SCK 11 DSP_SO 12 DSP_SI 13 8V 14 8V 15 M-GND 16 M-GND 17 5V 18 5V 19 Lch 20 A-GND 21 DSP-GND 22 Rch

To 7201-02-11A CN681

The following symbols are shown on the schematic diagram.

7V	7V
5V	5V
⇦	AUDIO(L,R)

CQ-DF203W DECK BLOCK

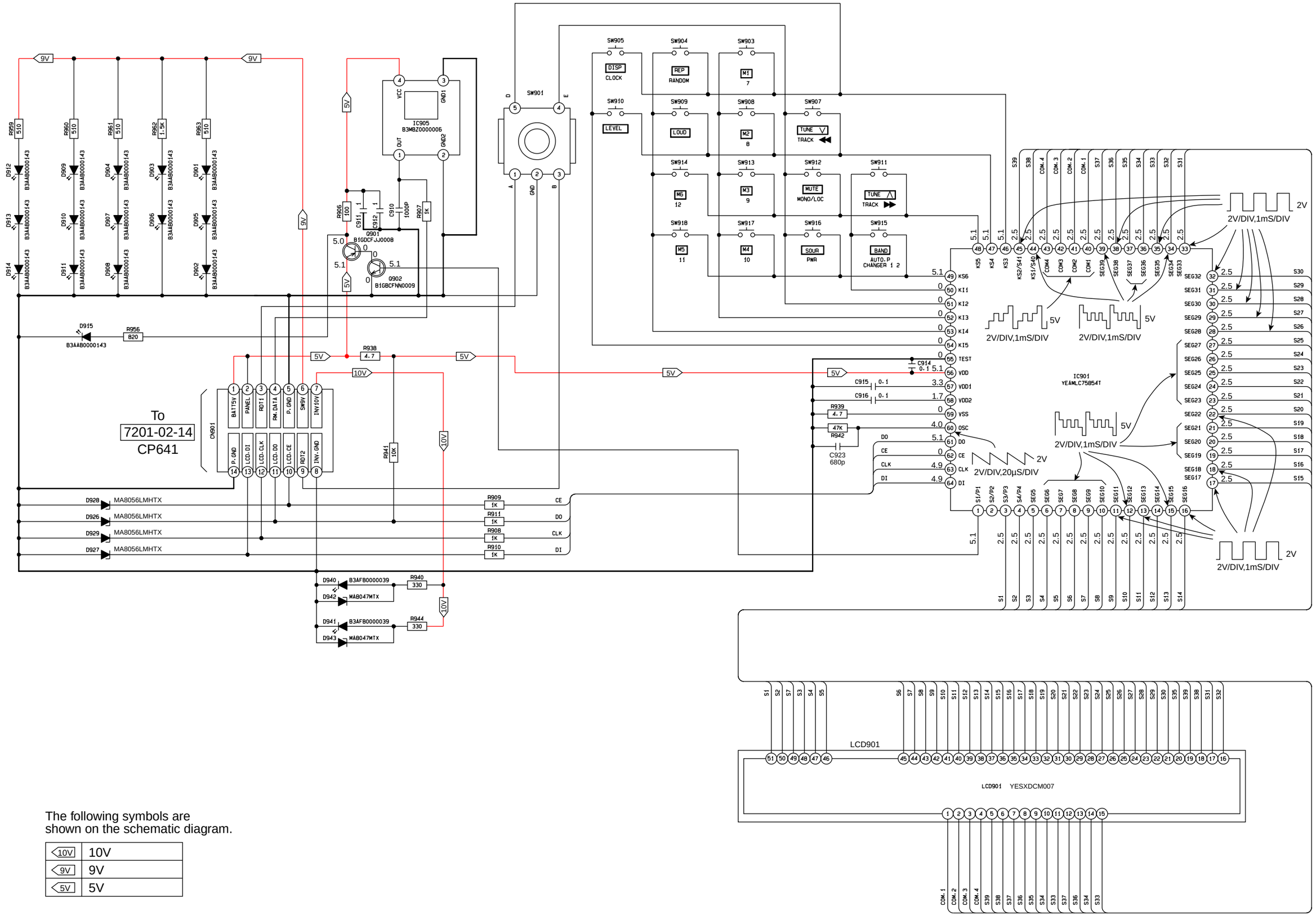

The following symbols are shown on the schematic diagram.

10V	10V
9V	9V
5V	5V

7201-02-11A

PA51 FM/AM TUNER PACK

IC201 AUDIO SELECT TONE CONTROL

IC271 POWER AMP

IC280 BUFFER

IC401 PLL

IC501 CPU

IC650 INVERTER

IC701 BATT DET

IC702 RESET

IC761 +9V REG

IC719 +5V REG

IC783 +5V REG

IC781 +9V REG

7201-02-12A

TO 3032-14-03 CN1

TO 7201-02-13 CJ642

TO 7201-02-14 CN640

The following symbols are shown on the schematic diagram.

+B		8V		CD	(L.R)
ACC		5V		AUDIO	(L.R)
9V		RADIO	(L.R)		

The following symbols are shown on the schematic diagram.

10V	10V
9V	9V
5V	5V

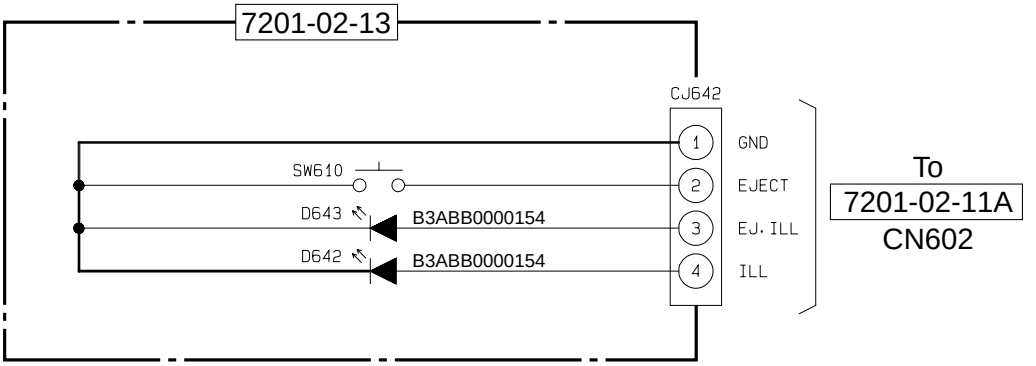

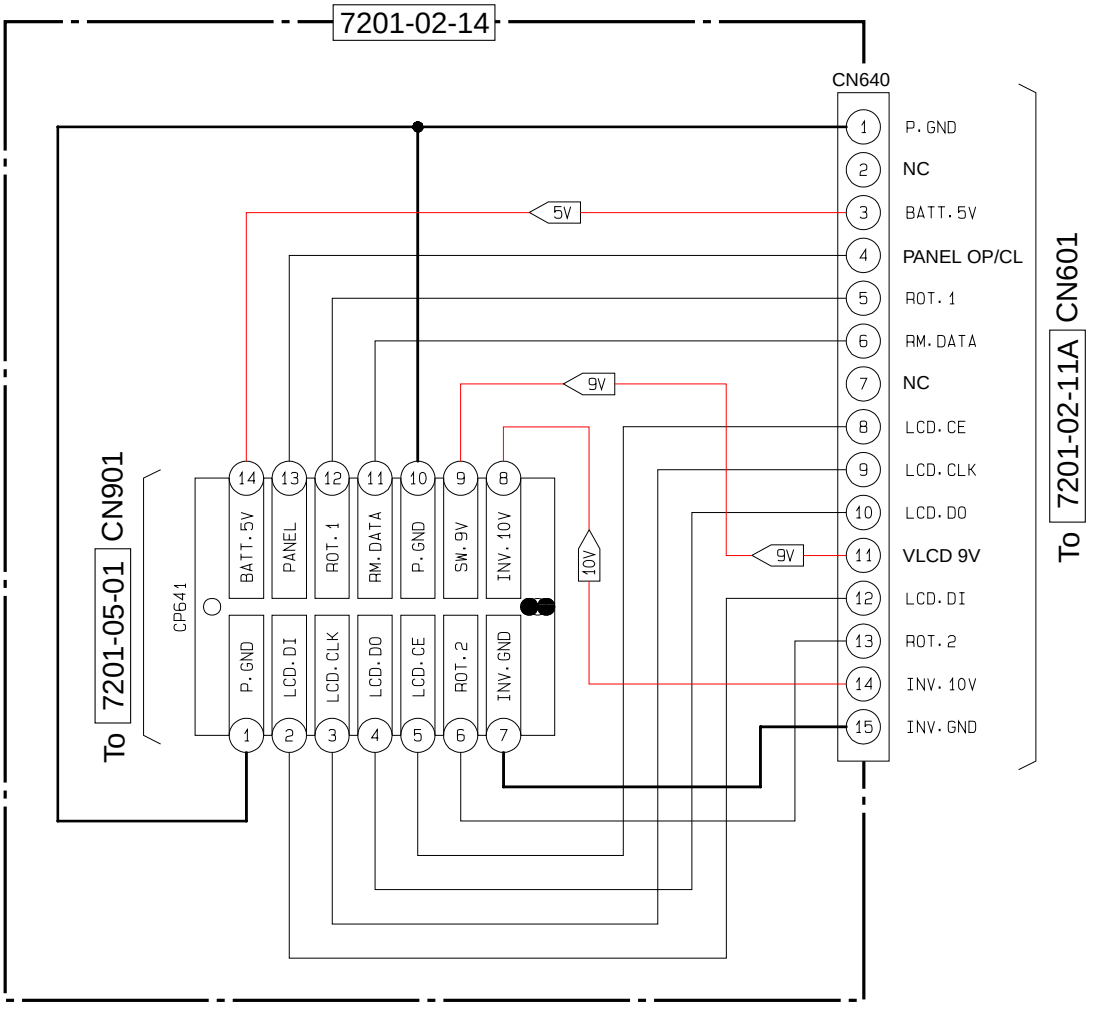

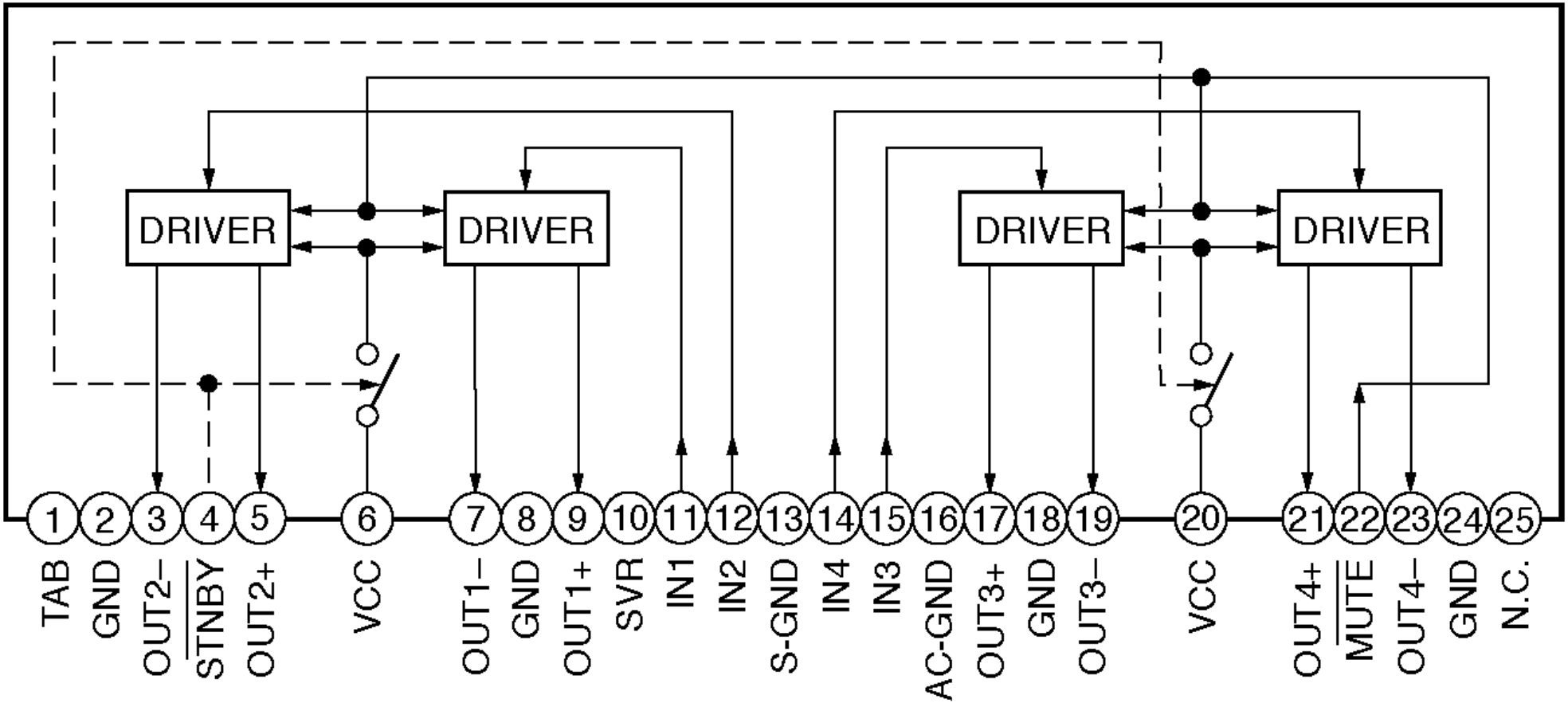
DRIVER
DRIVER
DRIVER
DRIVER
1 TAB
2 GND
3 OUT2–
4 STNBY
5 OUT2+
6 VCC
7 OUT1–
8 GND
9 OUT1+
10 SVR
11 IN1
12 IN2
13 S-GND
14 IN4
15 IN3
16 AC-GND
17 OUT3+
18 GND
19 OUT3–
20 VCC
21 OUT4+
22 MUTE
23 OUT4–
24 GND
25 N.C.

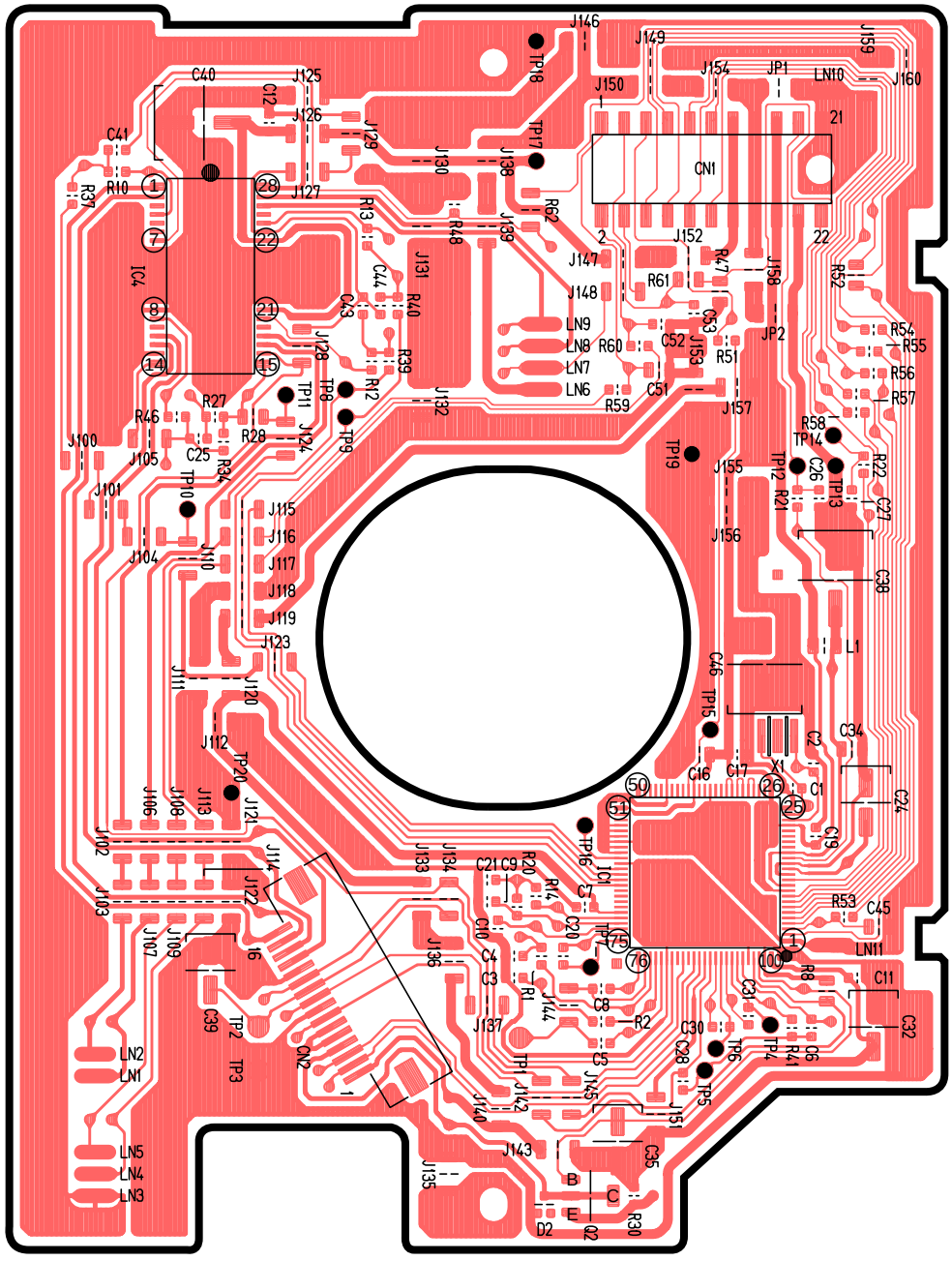

[3032-14-03] [Top View]

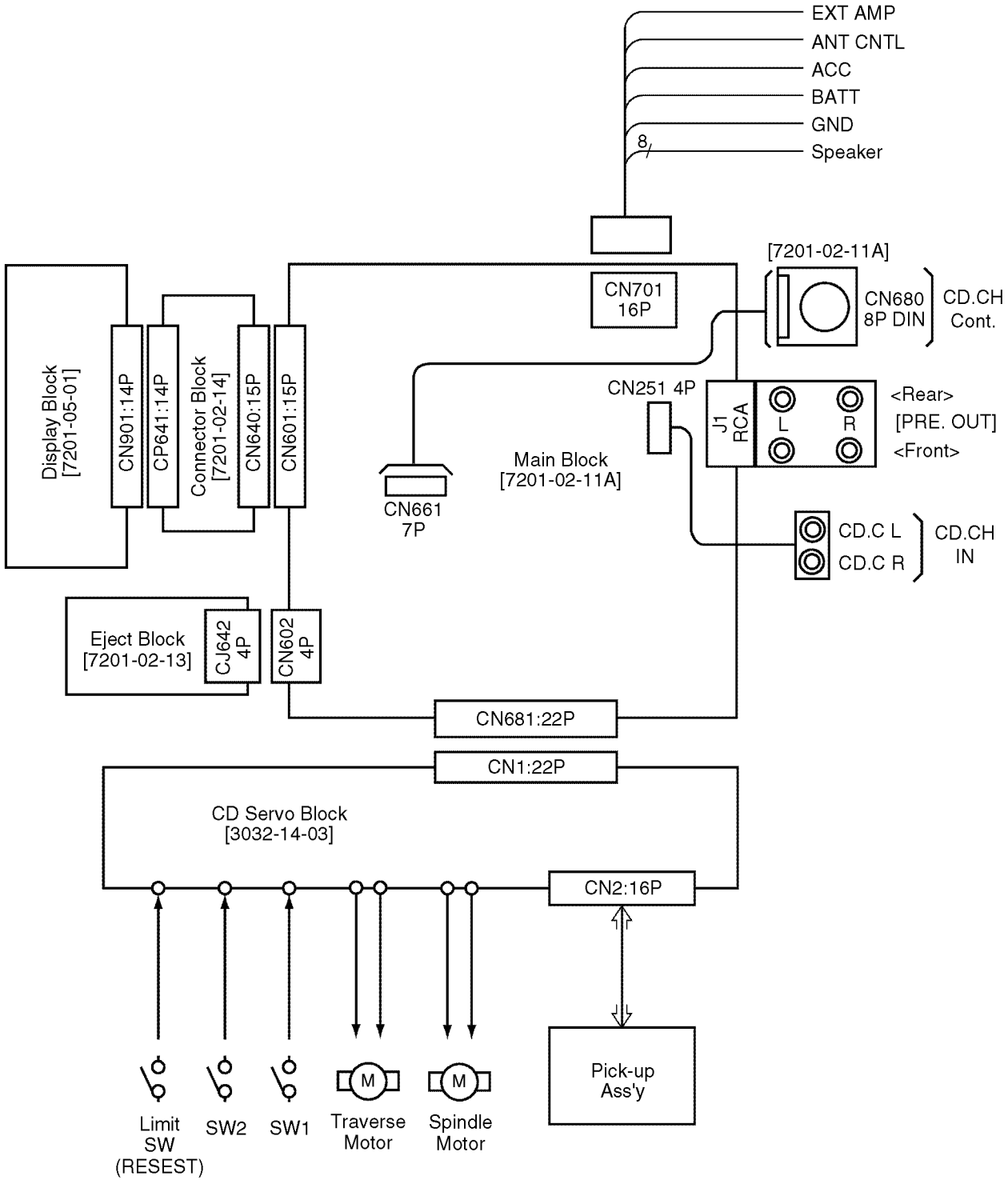
EXT AMP
ANT CNTL
ACC
BATT
GND
8
Speaker
[7201-02-11A]
CN701
16P
CN680
8P DIN
CD.CH
Cont.
Display Block
[7201-05-01]
CN901:14P
CP641:14P
Connector Block
[7201-02-14]
CN640:15P
CN601:15P
CN251 4P
J1
RCA
L
R
<Rear>
[PRE. OUT]
<Front>
Main Block
[7201-02-11A]
CN661
7P
CD.C L
CD.C R
CD.CH
IN
Eject Block
[7201-02-13]
CJ642
4P
CN602
4P
CN681:22P
CN1:22P
CD Servo Block
[3032-14-03]
CN2:16P
Pick-up
Ass'y
Limit
SW
(RESEST)
SW2
SW1
M
Traverse
Motor
M
Spindle
Motor

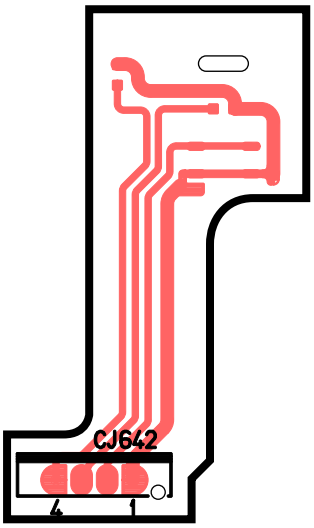

[7201-02-13]
[Top View]

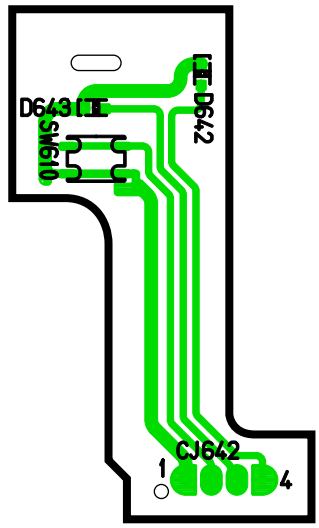

[7201-02-13]
[Bottom View]

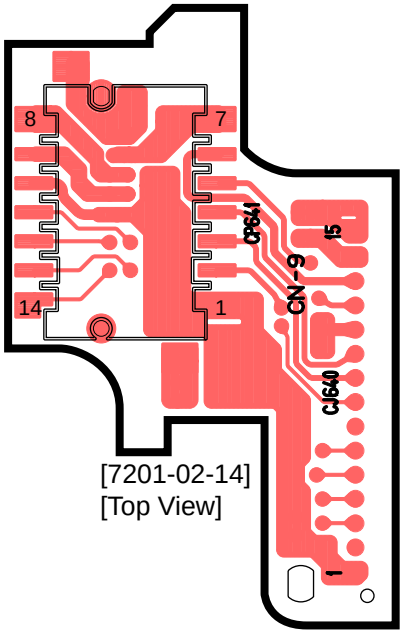

[7201-02-14]
[Top View]

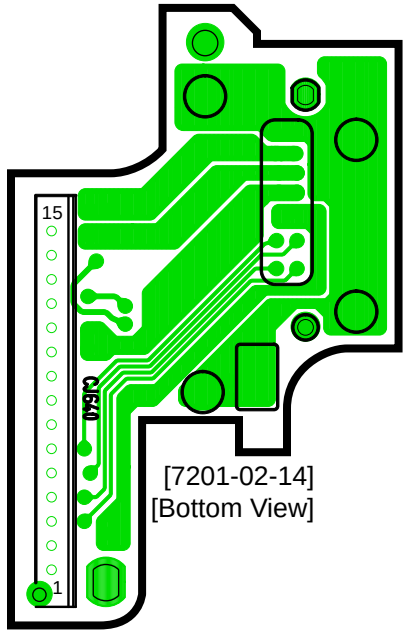

[7201-02-14]
[Bottom View]

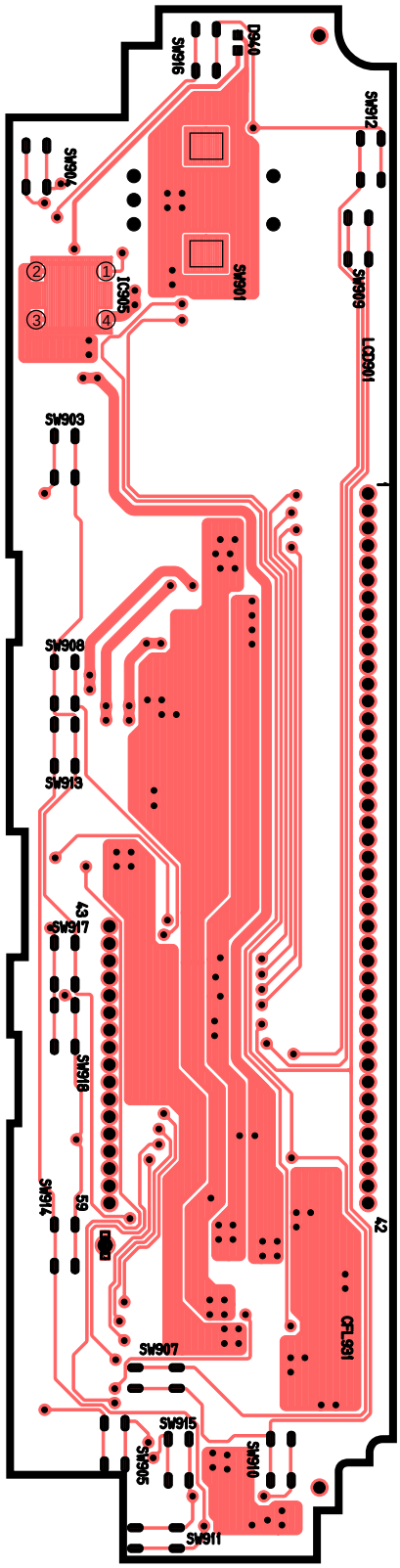

[7201-05-01] [Top View]

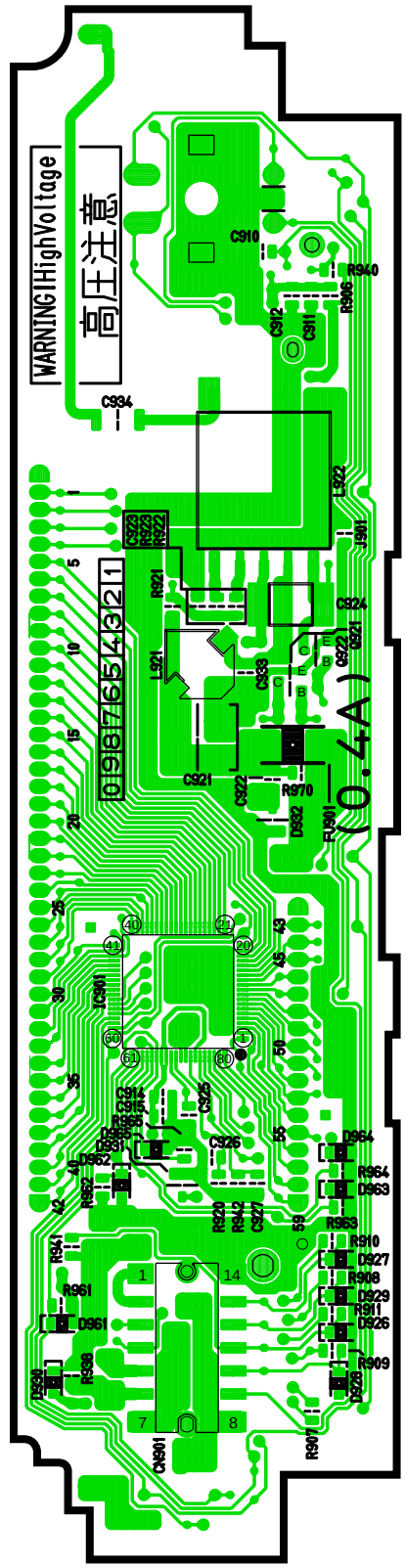

[7201-05-01] [Bottom View]

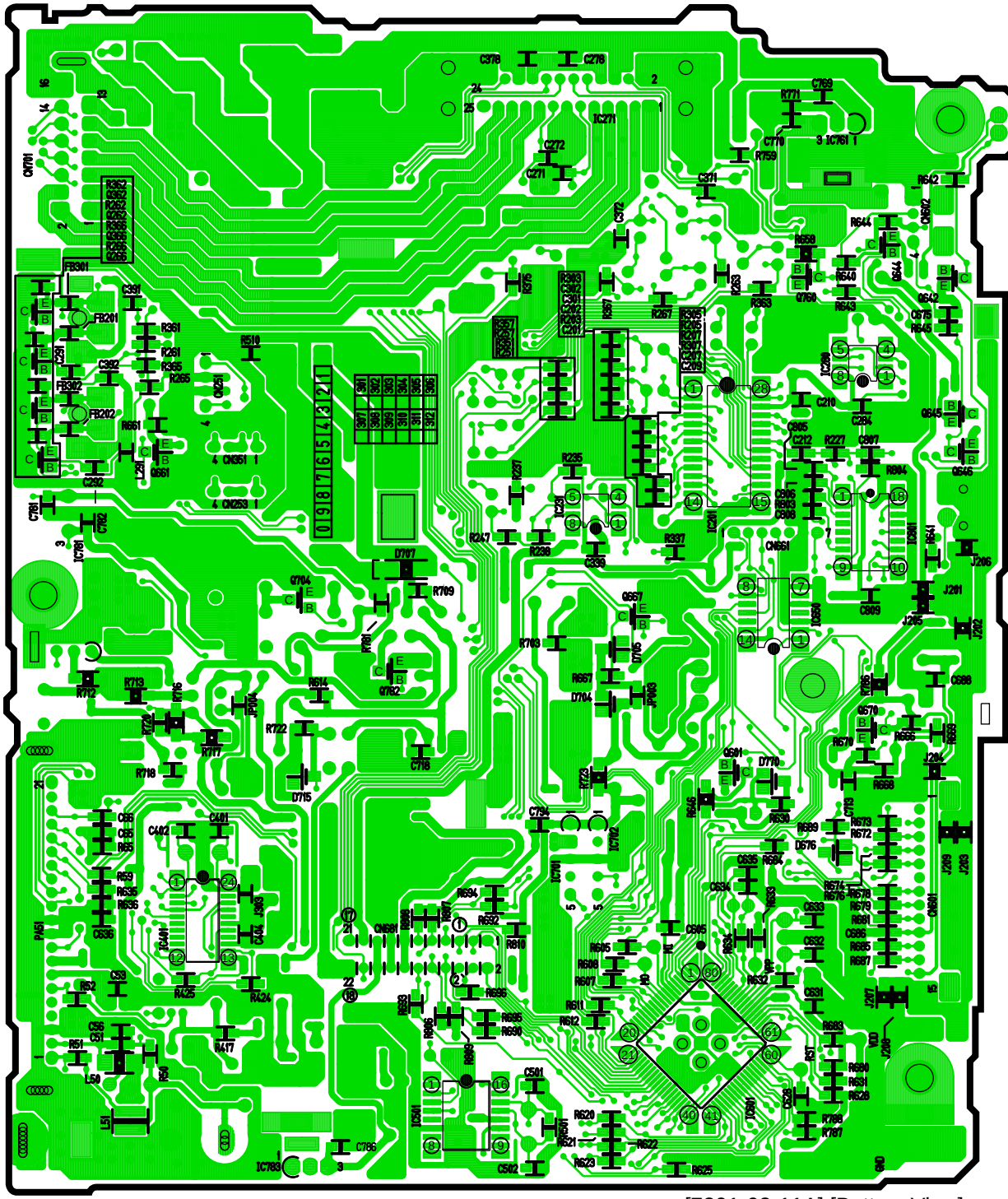

[7201-02-11A] [Bottom View]

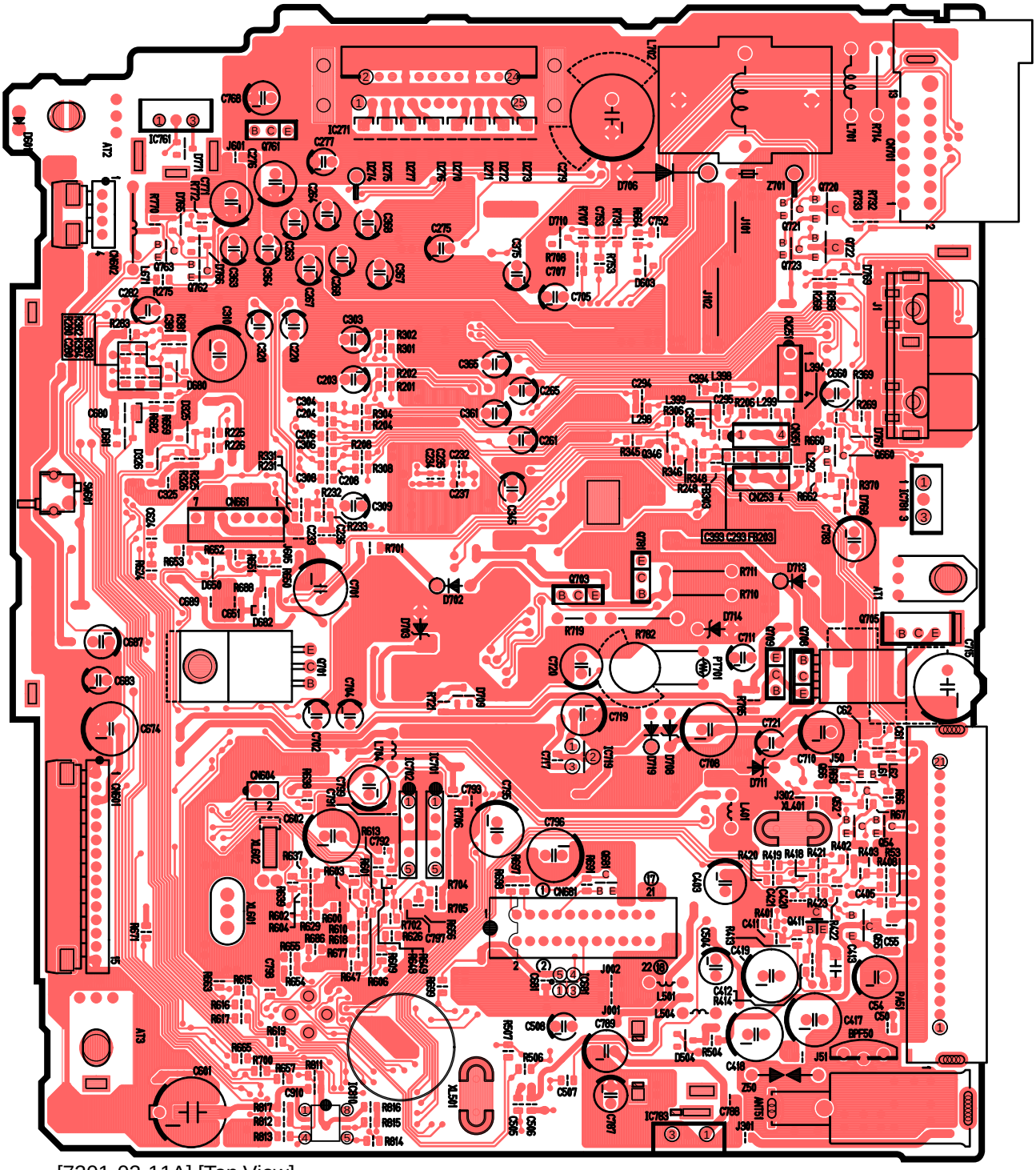

[7201-02-11A] [Top View]

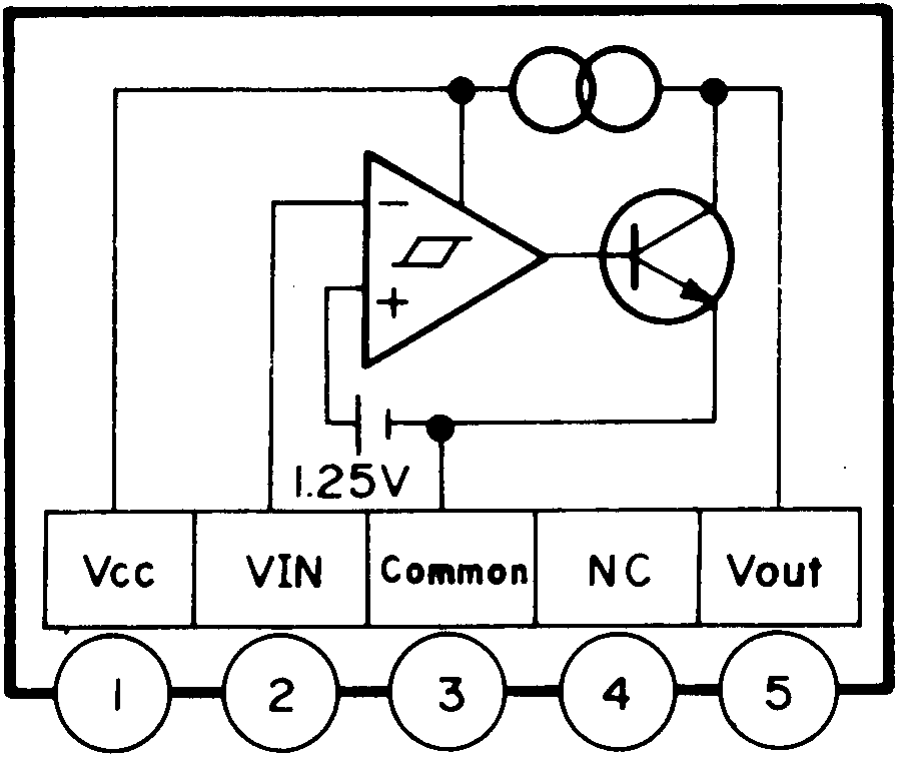
1.25V
Vcc
VIN
Common
NC
Vout
1
2
3
4
5

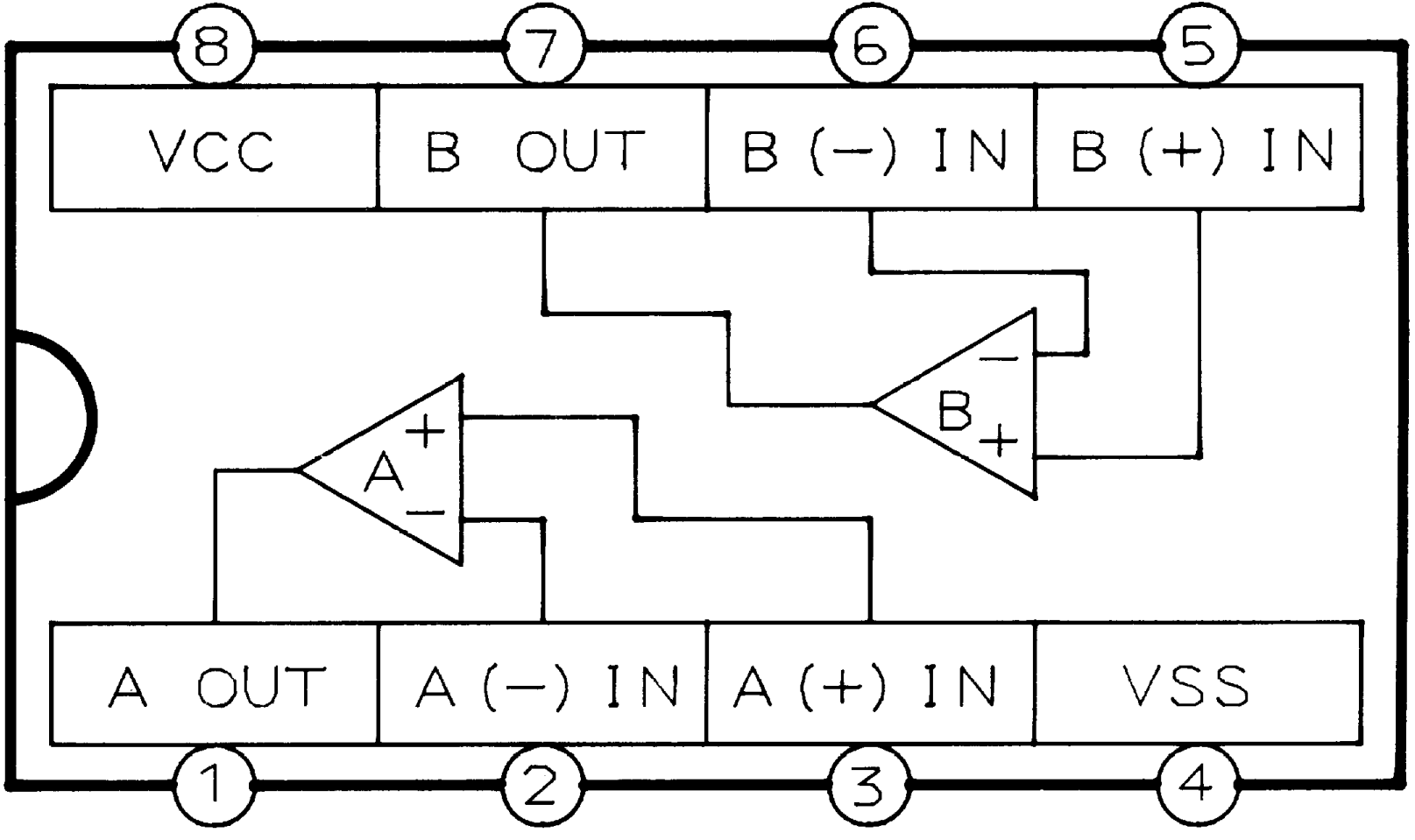
8
7
6
5
VCC
B OUT
B (−) IN
B (+) IN
B
A
A OUT
A (−) IN
A (+) IN
VSS
1
2
3
4

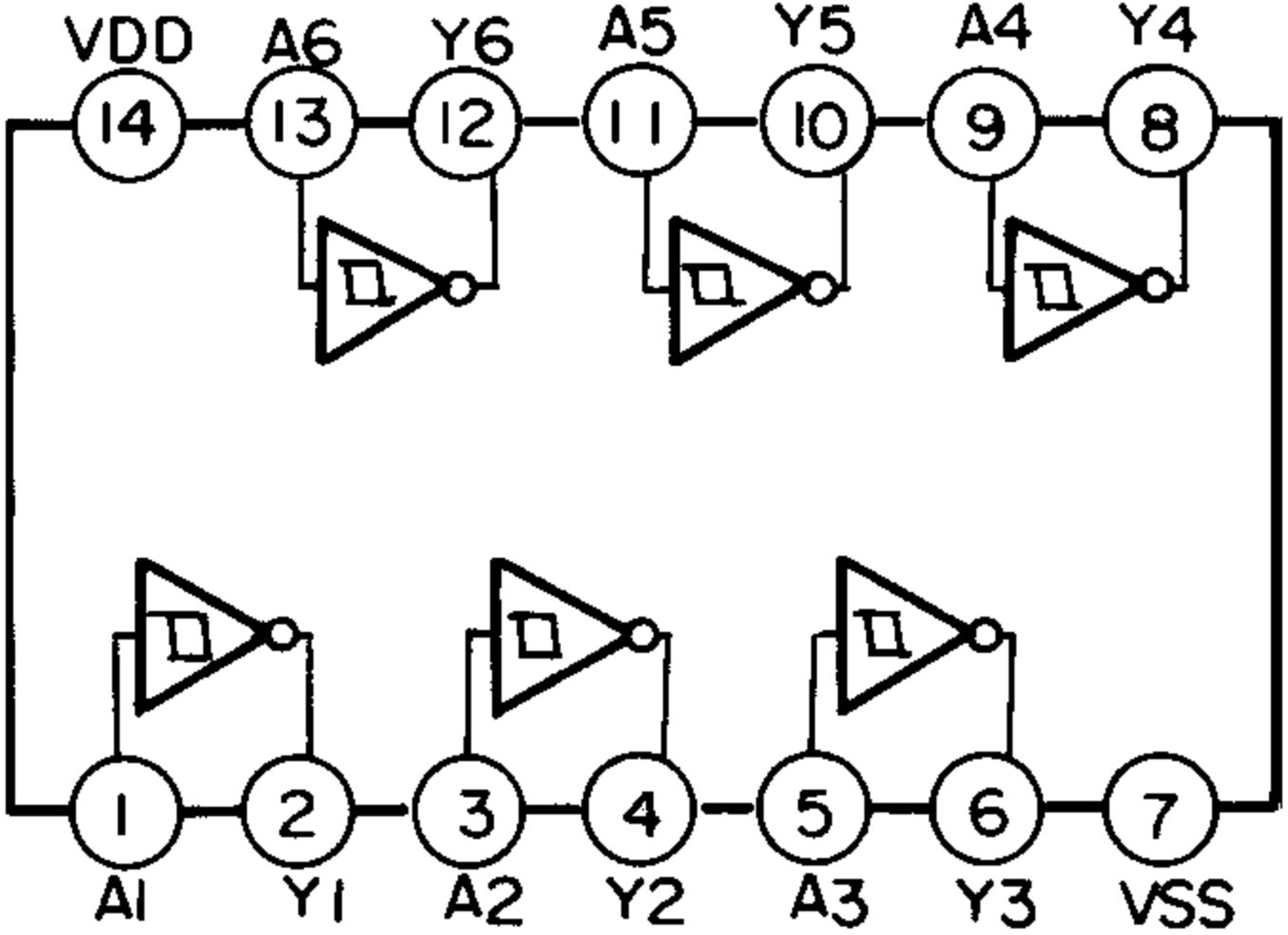
VDD
A6
Y6
A5
Y5
A4
Y4
14
13
12
11
10
9
8
1
2
3
4
5
6
7
A1
Y1
A2
Y2
A3
Y3
VSS

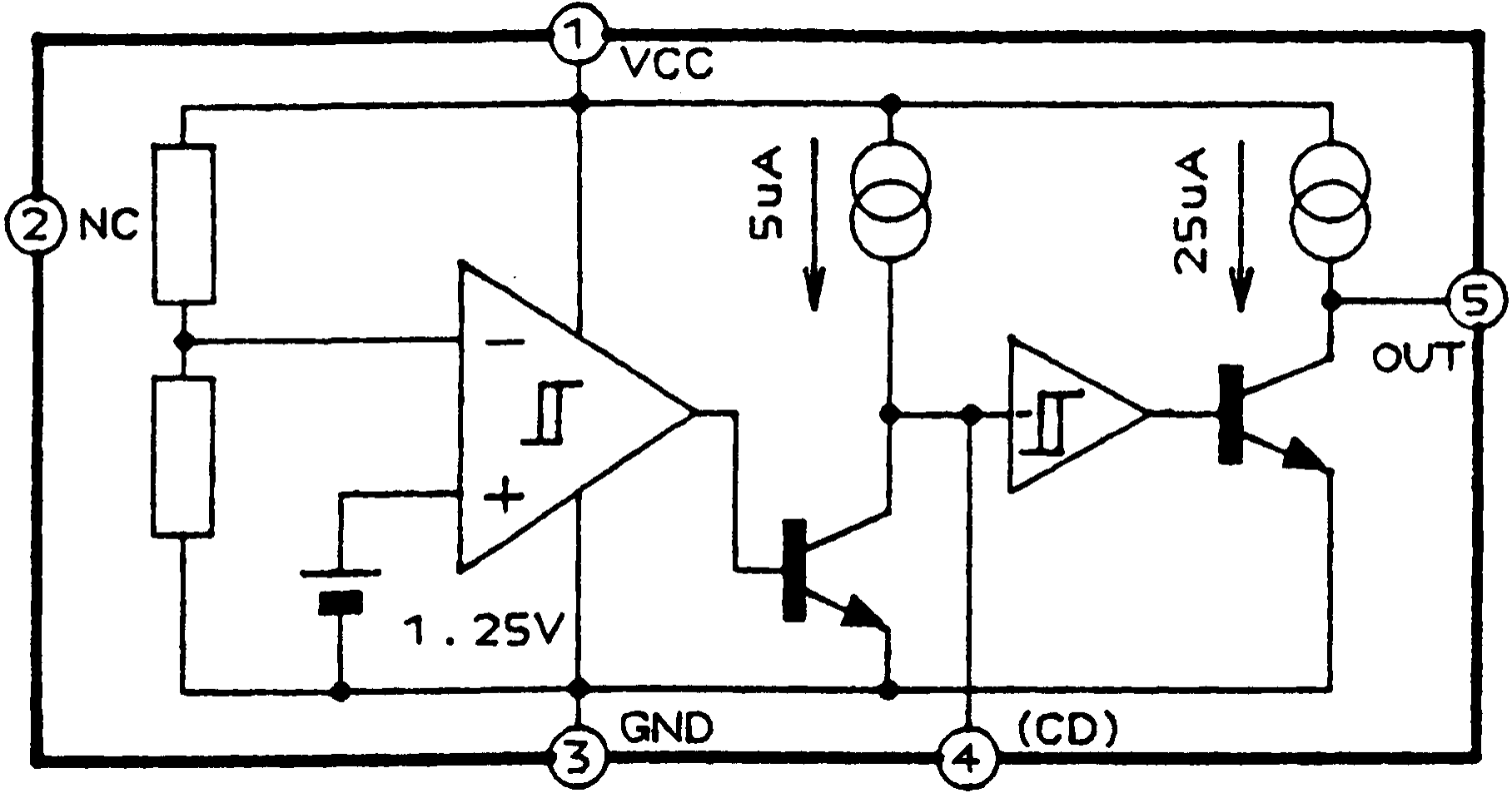
1
VCC
2
NC
5uA
25uA
5
OUT
1.25V
3
GND
4
(CD)

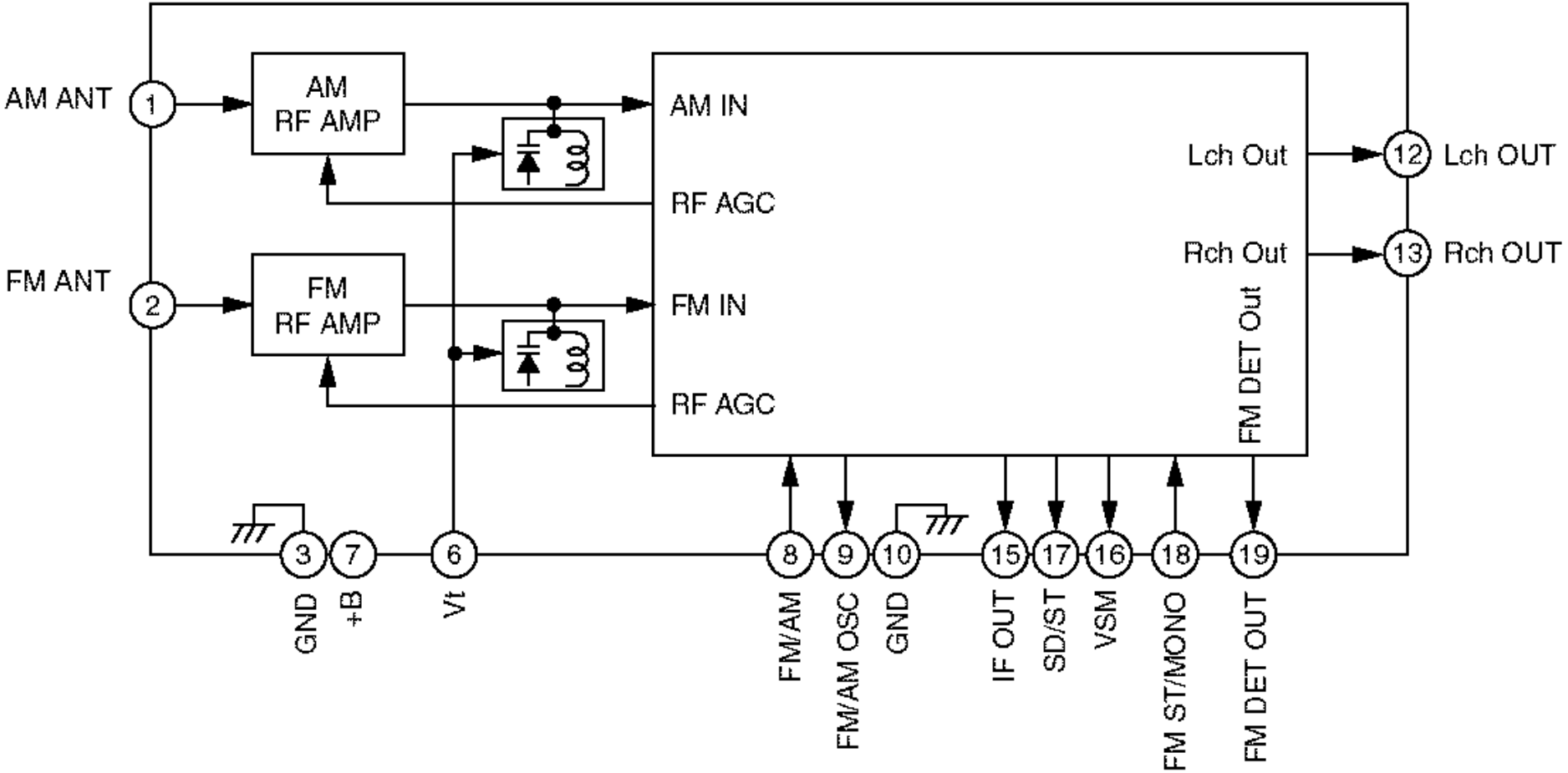
AM ANT
1
AM
RF AMP
FM ANT
2
FM
RF AMP
AM IN
RF AGC
FM IN
RF AGC
Lch Out
Rch Out
FM DET Out
12
Lch OUT
13
Rch OUT
3
GND
7
+B
6
Vt
8
FM/AM
9
FM/AM OSC
10
GND
15
IF OUT
17
SD/ST
16
VSM
18
FM ST/MONO
19
FM DET OUT