SERVICE MANUAL

Auto Reverse Cassette Car Stereo With AM/FM/MPX Radio

(12 Volt D.C. Negative Earth)

Model CM-832U

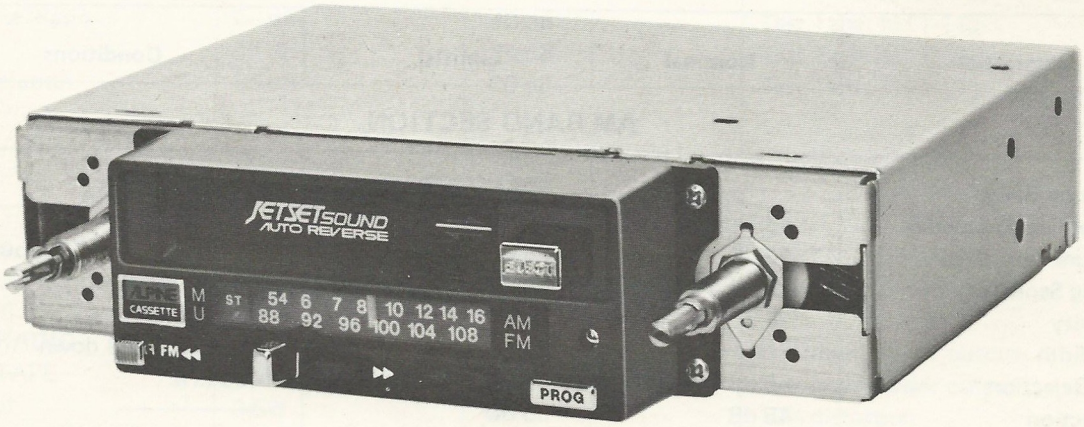

ALPINE ELECTRONICS INC.

CONTENTS

SPECIFICATIONS 3
PARTS LOCATION. 4
DIAL CORD STRINGING 4
BLOCK DIAGRAM. 5
ADJUSTMENT. 6
PRINTED CIRCUIT BOARDS. 9
WIRING DIAGRAM 11
SCHEMATIC DIAGRAM 12
SEMI CONDUCTOR LEAD IDENTIFICATION 15
PACKING METHOD 15
EXPLODED VIEW MAIN ASSEMBLY 16
EXPLODED VIEW CASSETTE MECHANISM 17
PARTS LIST 18

SPECIFICATIONS

Description	Nominal	Limit(s)	Conditions
AM BAND SECTION			
Frequency Range	———	525 kHz, 1620 kHz	———
Intermediate Frequency	455 kHz	———	
Maximum Sensitivity	20 dB 10μv	26 dB 20μv	Vol. control: max. 1W output
Quieting Sensitivity	22 dB 12.5μv	28 dB 25μv	S/N 20 dB, 1W output
Selectivity	28 dB	20 dB	1000 ±10 kHz
Band Width	———	6 ±3 kHz	1000 kHz, 6 dB down
Image Rejection	55 dB	50 dB	1400 kHz
IF Rejection	45 dB	35 dB	———
Signal-to-Noise Ratio	45 dB	40 dB	1000 kHz, 74 dB input
A.G.C. Figure or Merit	50 dB	45 dB	80 dB input, mod; 400 Hz, 30%
Audio Fidelity			
Low	50 Hz	100 Hz	6 dB down, 1000 kHz, 5mV
High	2300 Hz	1500 Hz	
Distortion	1%	3%	1000 kHz, 74 dB, 30% mod.

Description	Nomimal	Limit(s)	Conditions
FM BAND SECTION			
Frequency Range	87 ∿ 105 MHz	88 MHz, 104 MHz	————
Intermediate Frequency	10.7 MHz		
Quieting Sensitivity	14 dB 5μv	20 dB 10μv	S + N/N : 30 dB
Limiting Sensitivity	16 dB 6.3	26 dB 20μv	Ref. Input 40 dB, 3 dB down
Signal-to-Noise Ratio	60 dB	50 dB	94 MHz, 40 dB input
AM Rejection	44 dB	36 dB	94 MHz, mod; 400 Hz, 75 kHz dev. AM: 1000 kHz, mod: 400 Hz, 30%
Image Rejection	45 dB	40 dB	104 MHz
IF Rejection	70 dB	60 dB	88 MHz
Audio Fidelity (De-emphasis)			
Low	50 Hz	100 Hz	94 MHz, 40 dB; 22.5 dev., 3 dB down
High	3000 Hz	2500 Hz	
AFC Holding Range	±200 kHz	±120 ∿ 350 kHz	94 MHz, 40 dB input, 75 kHz dev. 3 dB down
Power Output	4.5W	3.5W	94 MHz, 75 kHz dev.; 10% distortion
Distortion	1%	3%	94 MHz, 60 dB input; dev.; 22.5 kHz
Stereo Separation	24 dB	20 dB	
Stereo Light Turn ON/	————	20 dB	94 MHz, 22.5 kHz dev.
OFF Level	————	5 dB	1000 Hz Audio Signal
TAPE PLAYER SECTION			
Tape Speed	4.76 cm +1%	4.76 cm +4%, −2%	14V DC Test Tape: MTT-111 at +20 ∿ +30° C
F.F. REW Time	within 100 sec.	100 sec.	14V DC
Wow & Flutter	0.25%	0.35%	14V DC, RMS value
Frequency Response			
6.3 kHz	————	±6 dB	Treble: −3 dB Bass: −12 dB
125 Hz	————	±4 dB	Treble: +1 dB Bass: +1 dB Test Tape: MTT-116U Reference Level: 333 Hz 0 dB
Signal-to-Noise Ratio	50 dB	40 dB	Test Tape: MTT-112
Crosstalk	43 dB	35 dB	Test Tape: MTT-121
Channel Separation	35 dB	30 dB	Test Tape: MTT-141
GENERAL			
Power Source	14.0V DC Negative Ground	———— ————	———— ————
Current Drain			
RADIO	2000 mA	2400 mA	Maximum power output
TAPE	2100 mA	2500 mA	Maximum power output
Power Output	3.5W	3W	10% distortion
Maximum Output	4.5W	4W	————
Dimensions	135(D) x 178(W) x 42(H) mm	————	————
Weight	1.8 Kg	————	————

PARTS LOCATIONS

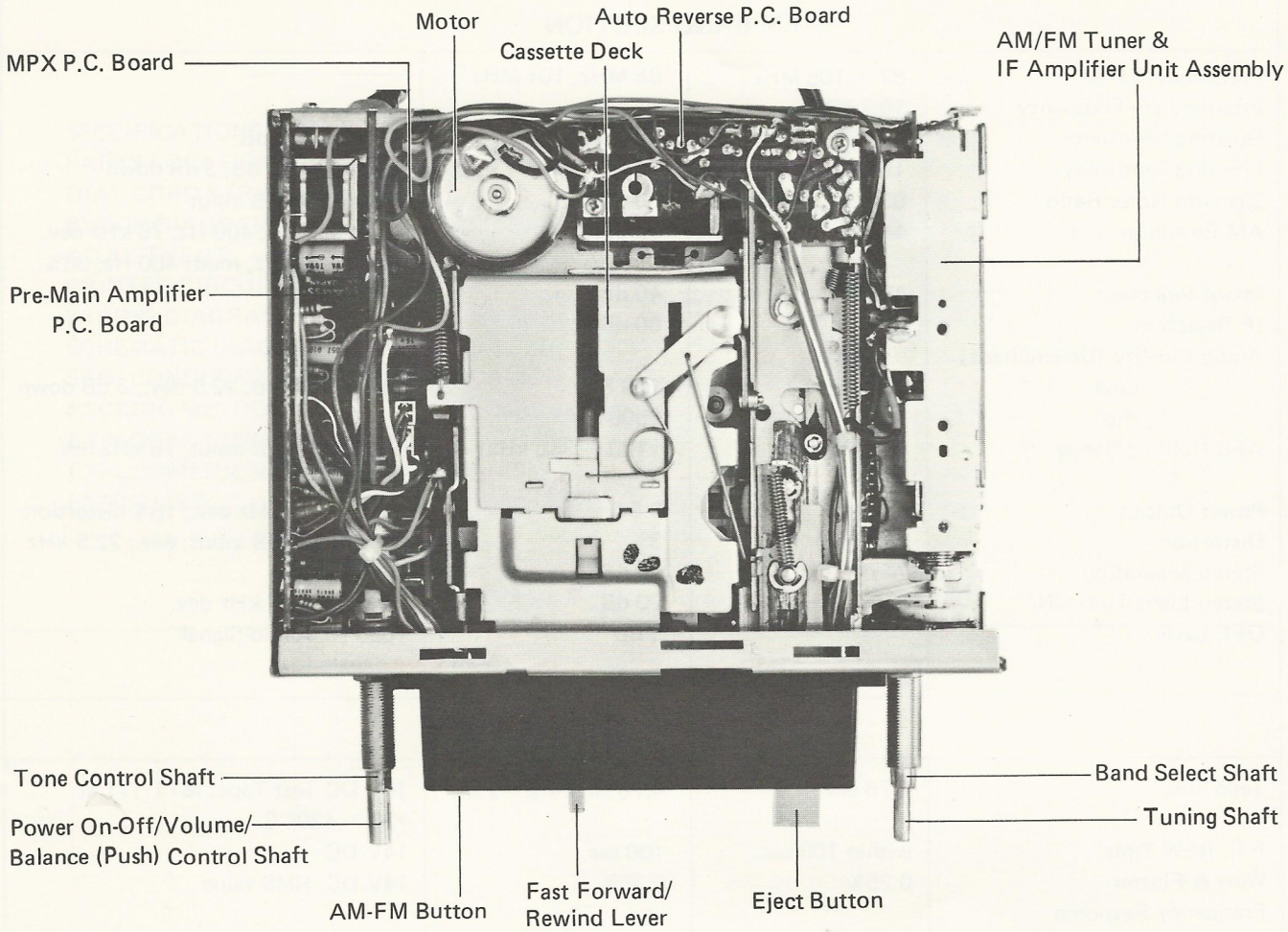

DIAL CORD STRINGING

1) Set the tuning capacitor to the maximum capacitance (fully counterclockwise position).
2) Wind the dial cord in the numerical sequence as shown in direction of the arrows.

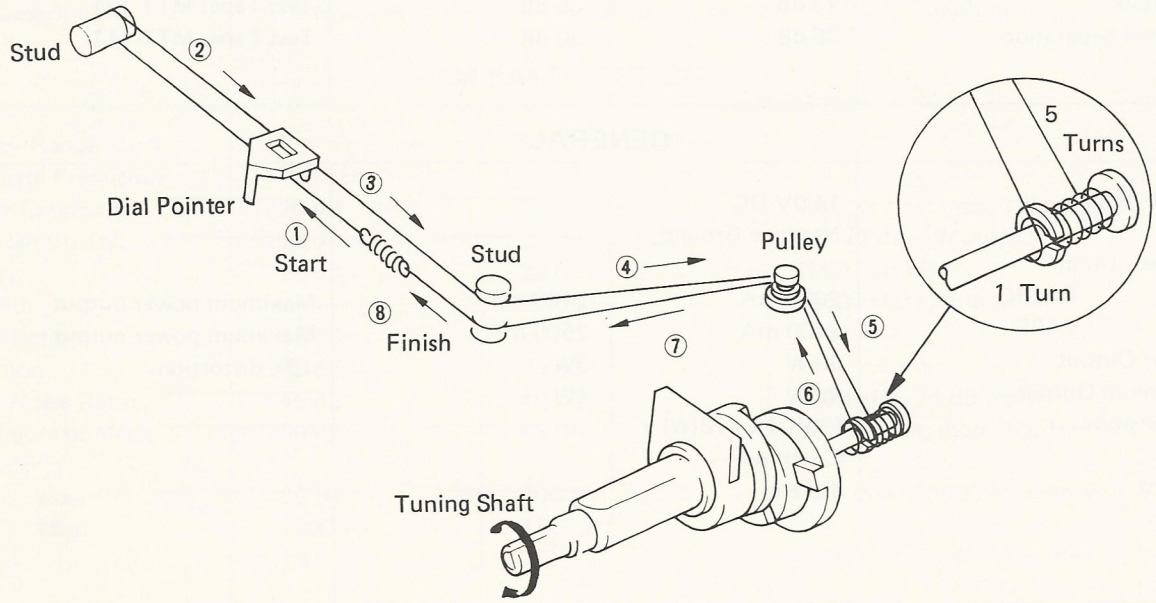

BLOCK DIAGRAM

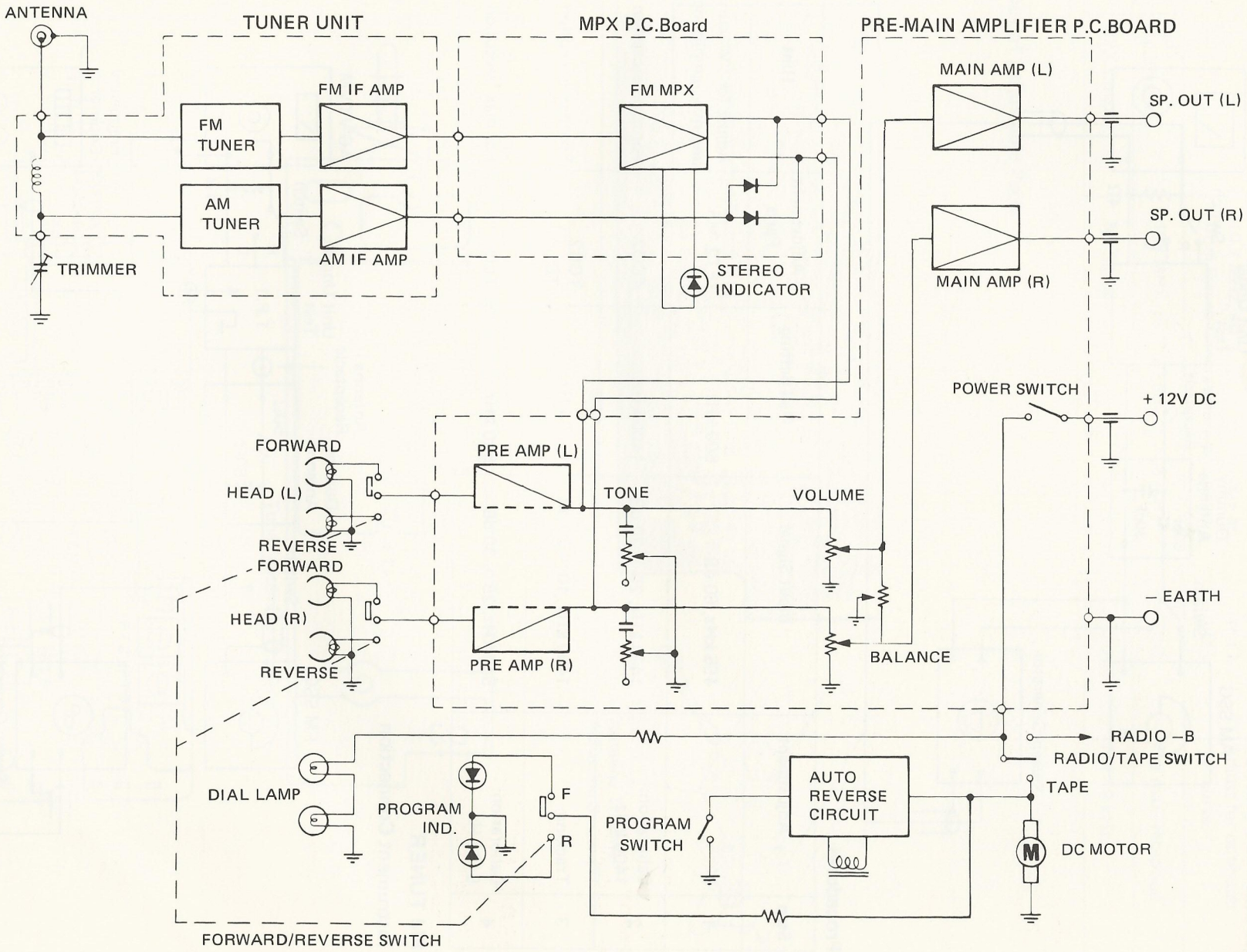

ADJUSTMENT

AM TUNER

Instrument Connection

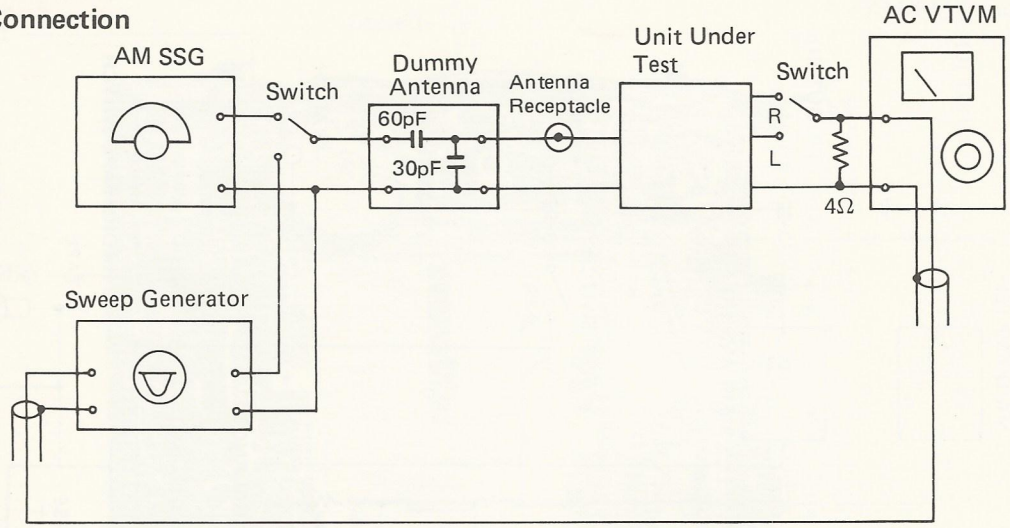

Procedures

Step	Adjustment	Input Signal	Dial Setting	Adjustment Parts	Hint
1	IF	455 kHz, 60 dB	600 kHz	IFT2 ∿ 5	Adjust for "V" curve and max. amplitude.
2	Calibration: 1400 kHz	1400 kHz, 25 ∿ 30 dB	1400 kHz	TCO2	For max. reception
3	Tracking	1400 kHz, 10 ∿ 20 dB	1400 kHz	TCR2 TC1	For max. reception
4	Calibration: 540 kHz	540 kHz, 25 ∿ 30 dB	540 kHz	TLO	For max. reception

FM TUNER

Instrument Connection

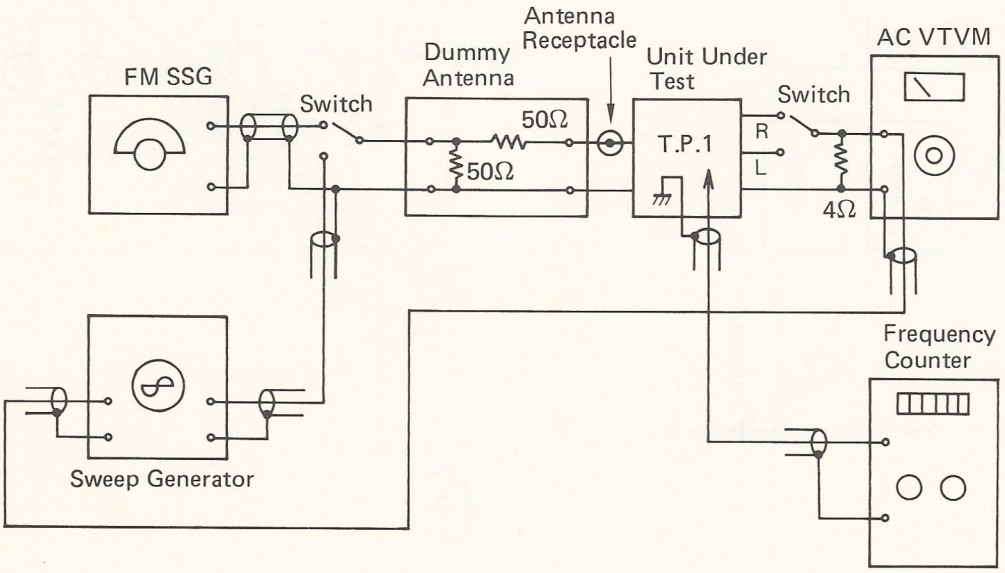

Procedures

Step	Adjustment	Input Signal	Dial Setting	Adjustment Parts	Hint
1	IF	10.7 MHz, 40 ∿ 70 dB from Sweep Generator	Possible at any point	IFT1 LD	Adjust for optimum "S" curve.
2	FM Calibration	108 MHz, 15 ∿ 20 dB	108 MHz	TCO	For max. reception
3	MPX Circuit	No Signal		VR101	For 19 kHz

Layout of Adjustable Parts

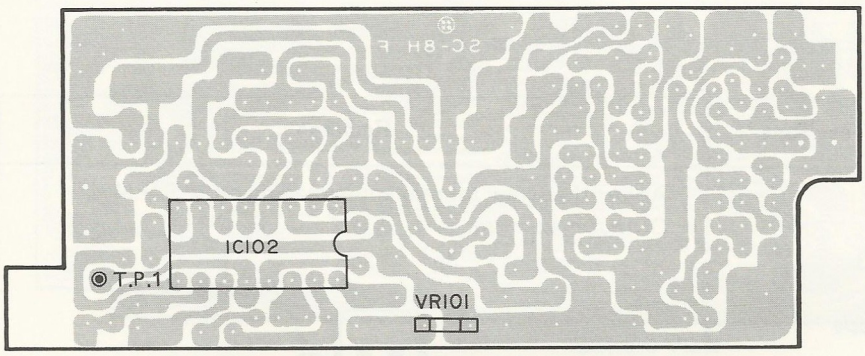

MPX P.C.Board

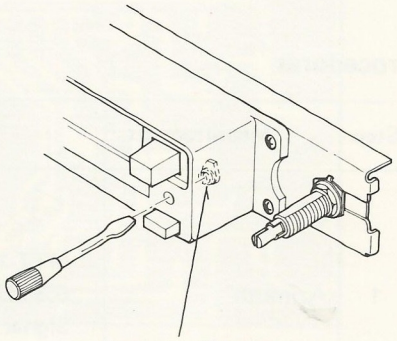

Antenna Trimmer Adjusting Screw (TC1)

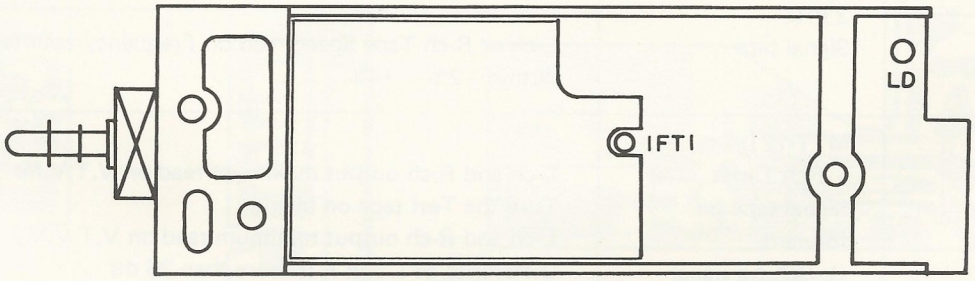

Tuner Assembly (Pattern Side)

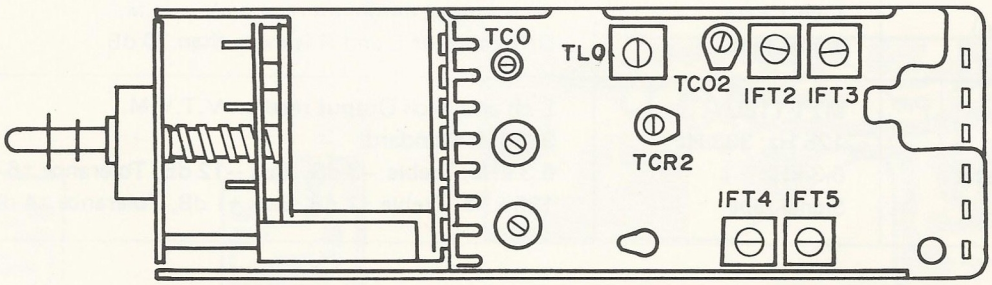

Tuner Assembly (Component Side)

TAPE PLAYER

Instrument Connection

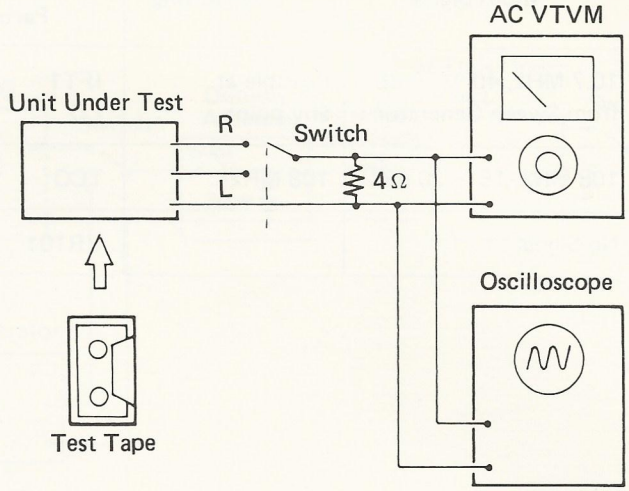

Procedures

Step	Measurement	Test Tape	Remarks
1	Azimuth	MTT-113 6.3 kHz Signal Tape	Adjust the screw for maximum reading on V.T.V.M.s. Output maximum. Azimuth Screw
2	Wow and Flutter	MTT-111 3 kHz Signal tape	L-ch or R-ch Wow and Flutter read on Wow and Flutter Meter. Less than 0.35%.
3	Tape Speed		L-ch or R-ch Tape Speed read on Frequency counter. Within –2% ∿ +4%
4	Cross Talk (Track)	MTT-121 L-Rch 1 kHz Signal tape on forward. (L-Rch no signal tape on reverse)	L-ch and R-ch output maximum read on V.T.V.M. Turn the Test tape on blank. L-ch and R-ch output minimum read on V.T.V.M. Difference of L and R is more than 35 dB.
5	Cross talk (Separation)	MTT-141 L-ch 1 kHz Signal tape	L-ch output maximum read on V.T.V.M. R-ch output minimum read on V.T.V.M. Difference of L and R is more than 30 dB.
6	Frequency Characteristic	MTT-116U 125 Hz; 333 Hz 6.3 kHz Signal tape	L-ch and R-ch Output read on V.T.V.M. 333 Hz; Standard 6.3 kHz; Treble –3 dB, Bass –12 dB, Tolerance ±6 dB 125 kHz; Treble +1 dB, Bass +1 dB, Tolerance ±4 dB

PRINTED CIRCUIT BOARDS

Pre-Main Amplifier P.C.Board

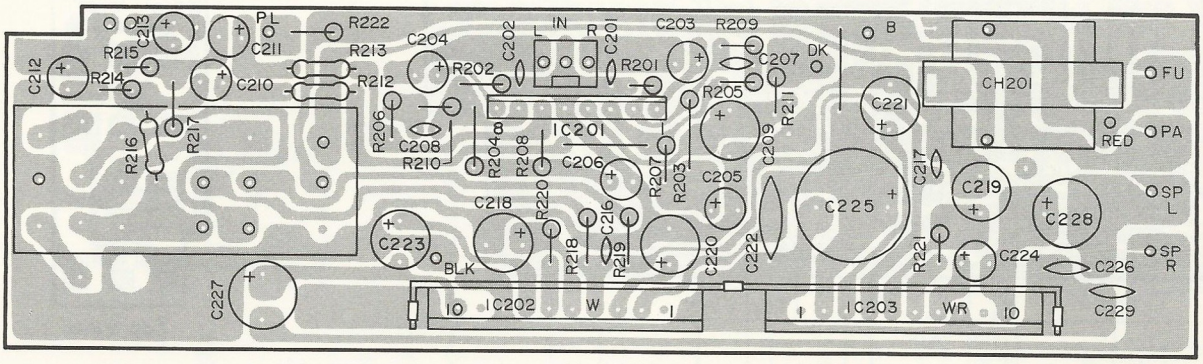

Top View

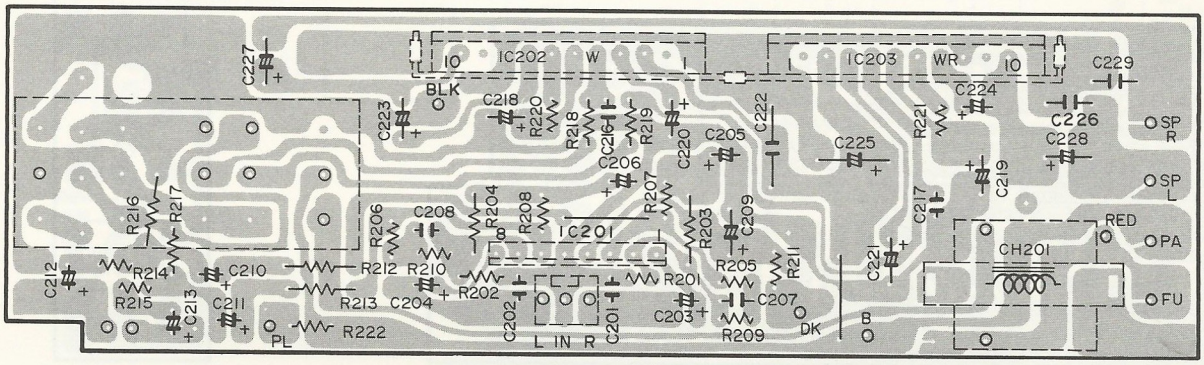

Bottom View

Lamp P.C.Board

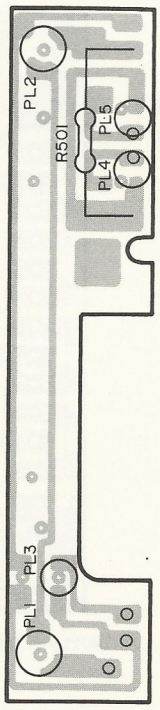

Top View

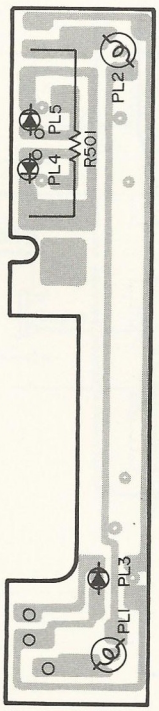

Bottom View

Auto Reverse P.C.Board

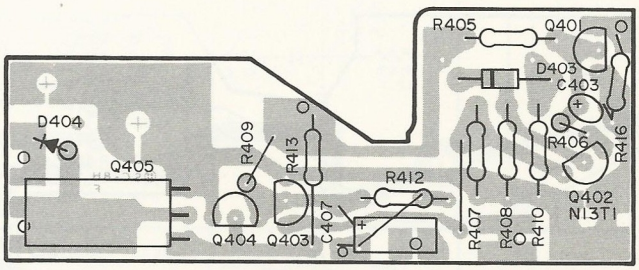

Top View

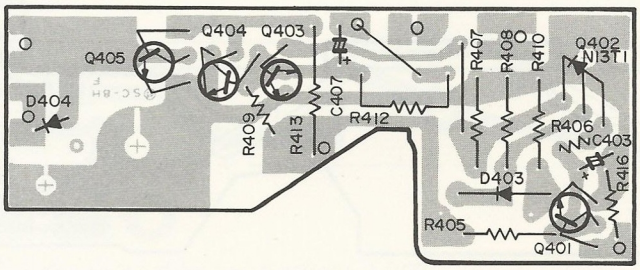

Bottom View

MPX.P.C.Board

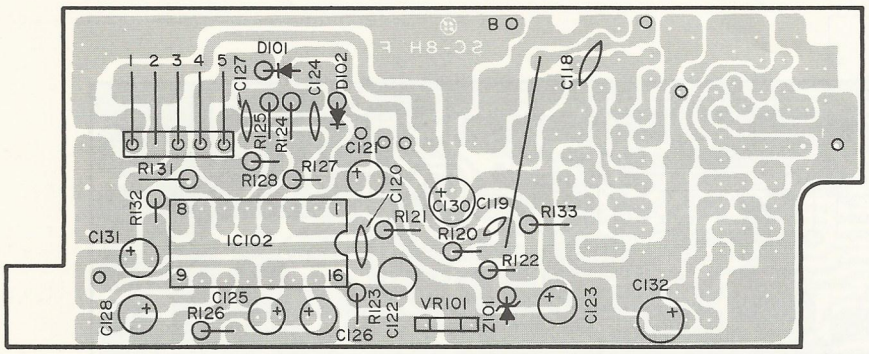

Top View

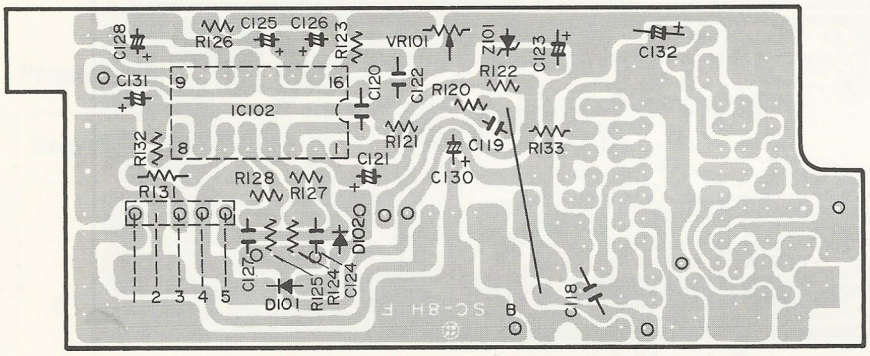

Bottom View

Volume P.C. Board

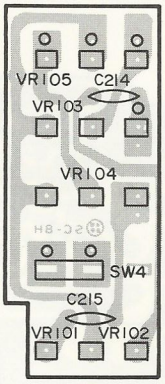

Top View

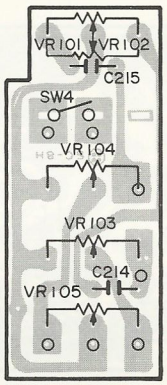

Bottom View

Lead Switch P.C.Board

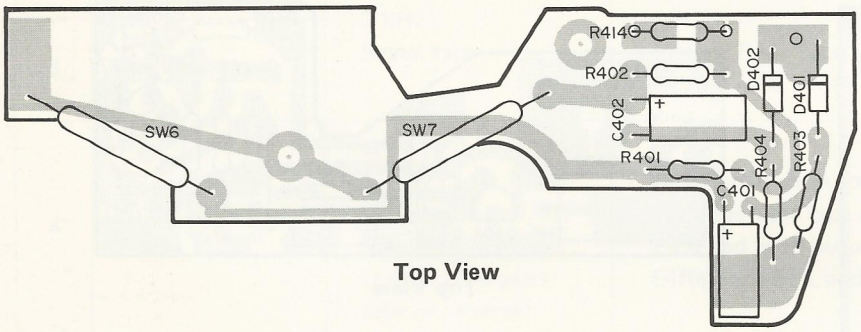

Top View

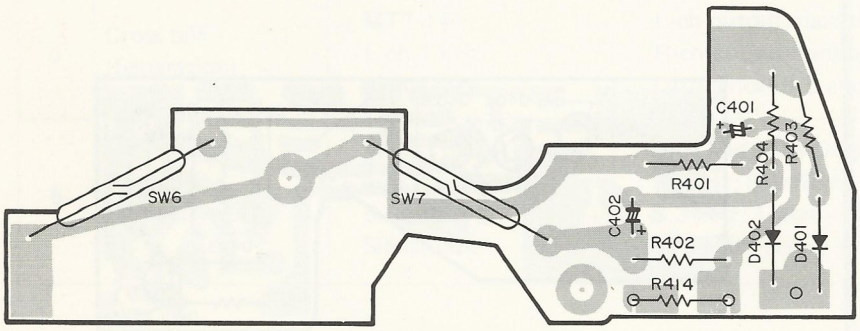

Bottom View

Forward/Reverse Switch P.C.Board

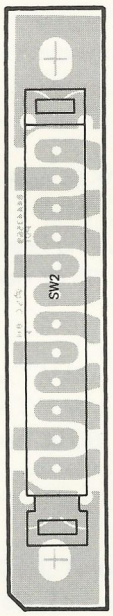

Top View

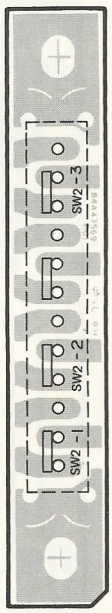

Bottom View

WIRING DIAGRAM

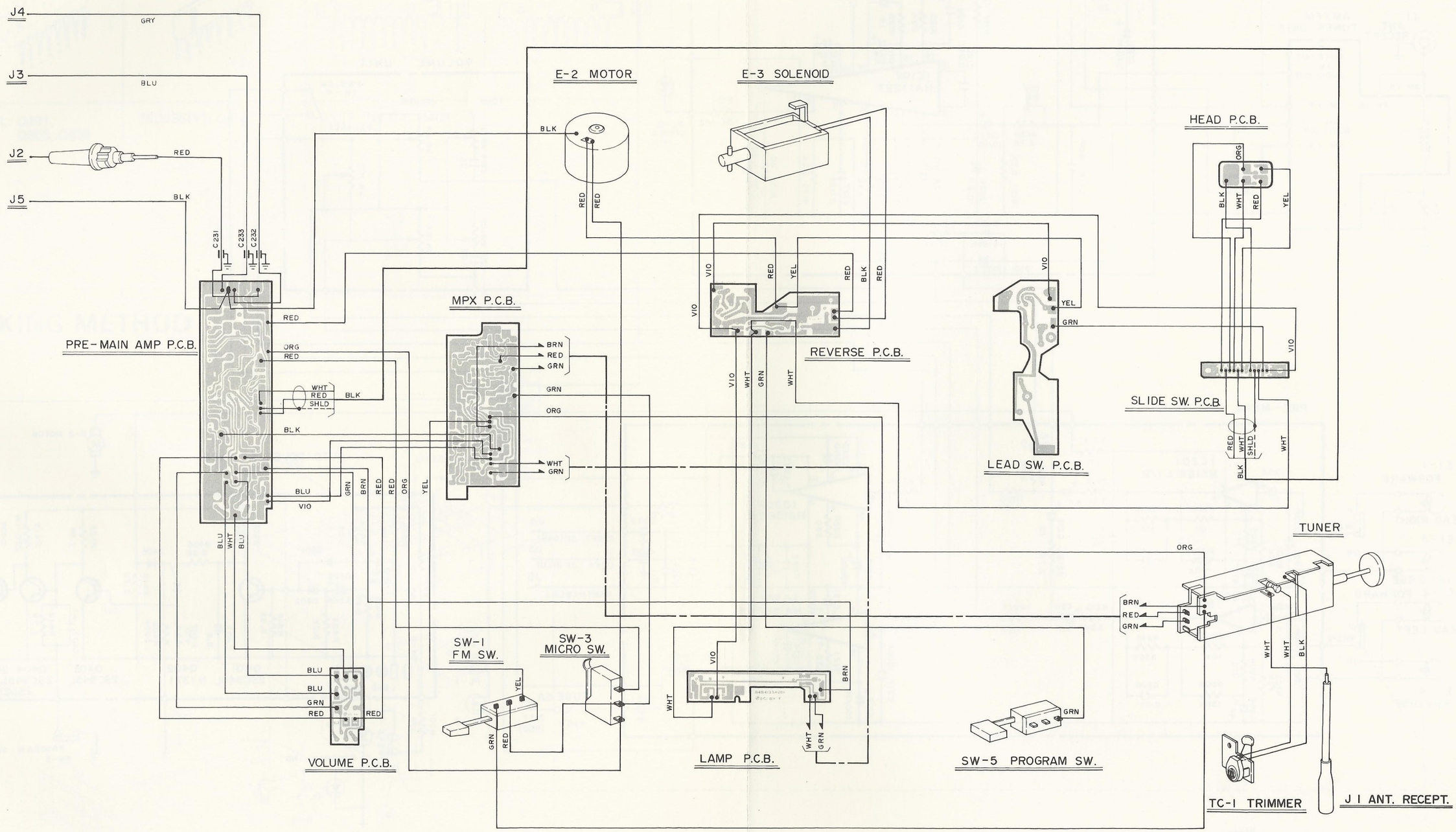

SCHEMATIC DIAGRAM

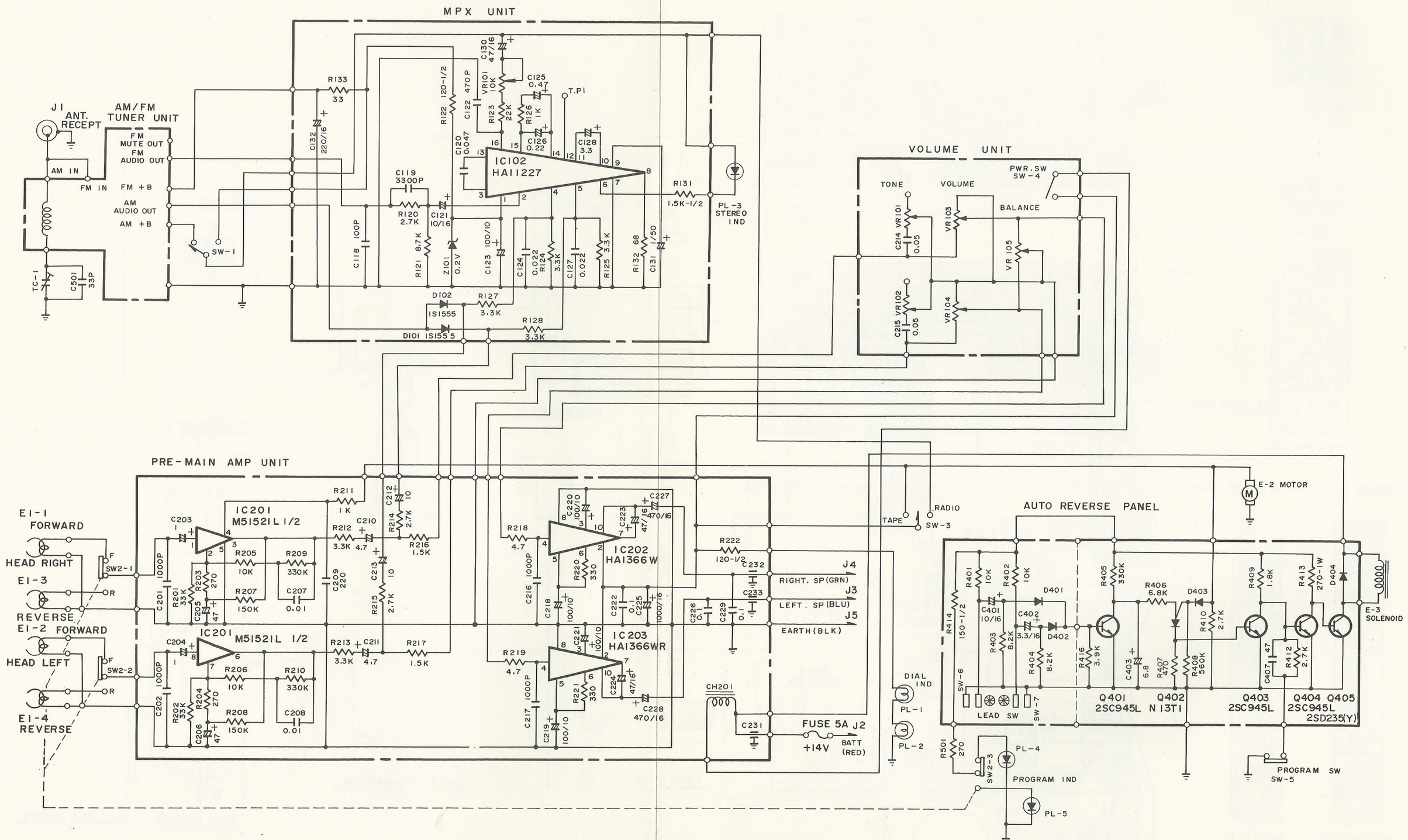

Note:
(1) All resistance values are in ohms = 1,000
(2) All capacitance values are in microfarads. $P = \frac{1}{1,000,000}$

SEMICONDUCTOR LEAD IDENTIFICATION

HA11227: IC101 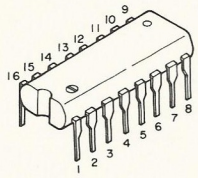	M51521L: IC201 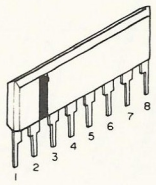	HA1366W: IC202 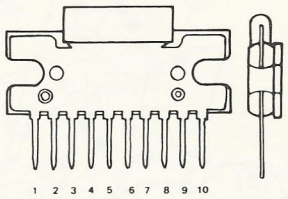	HA1366WR: IC203 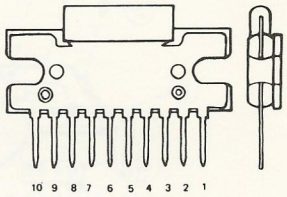
2SC945L: Q401, Q603, Q404 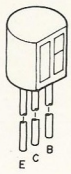	2SD235(Y): Q405 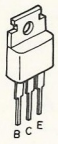	P.U.T., N13T1: Q402 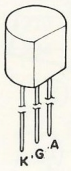	

PACKING METHOD

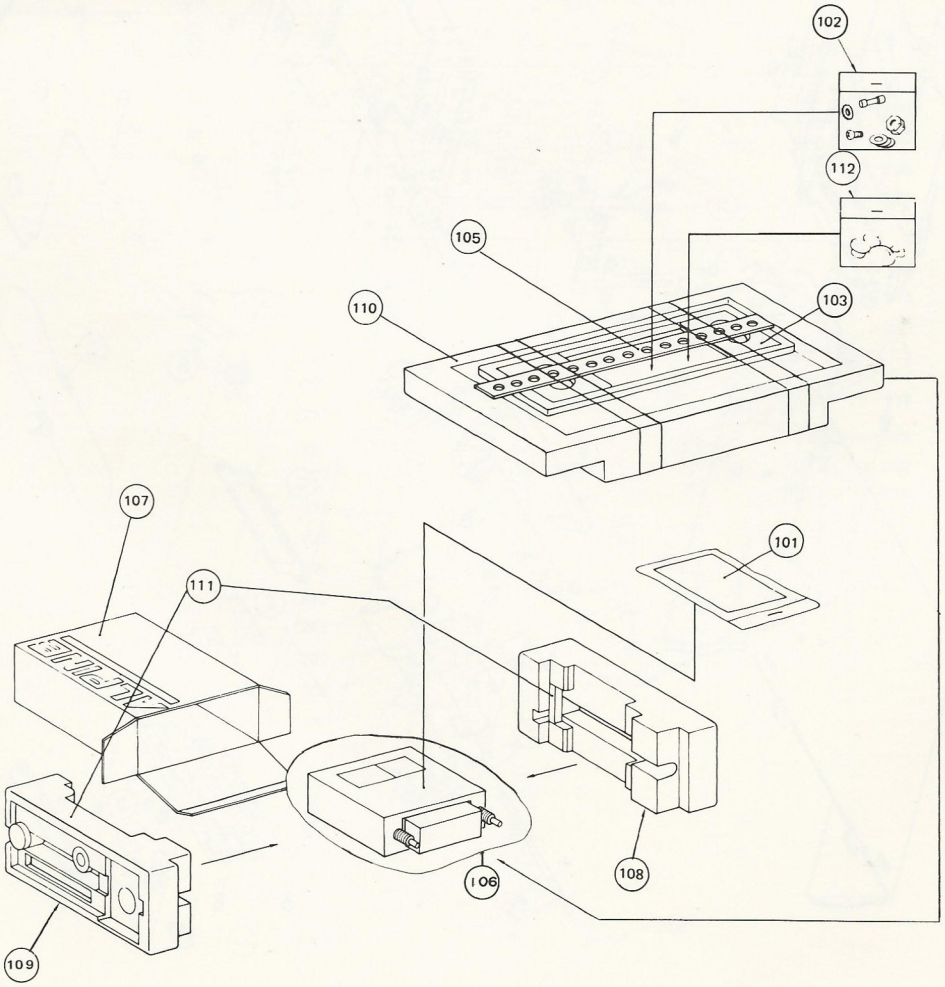

EXPLODED VIEW, MAIN ASSEMBLY

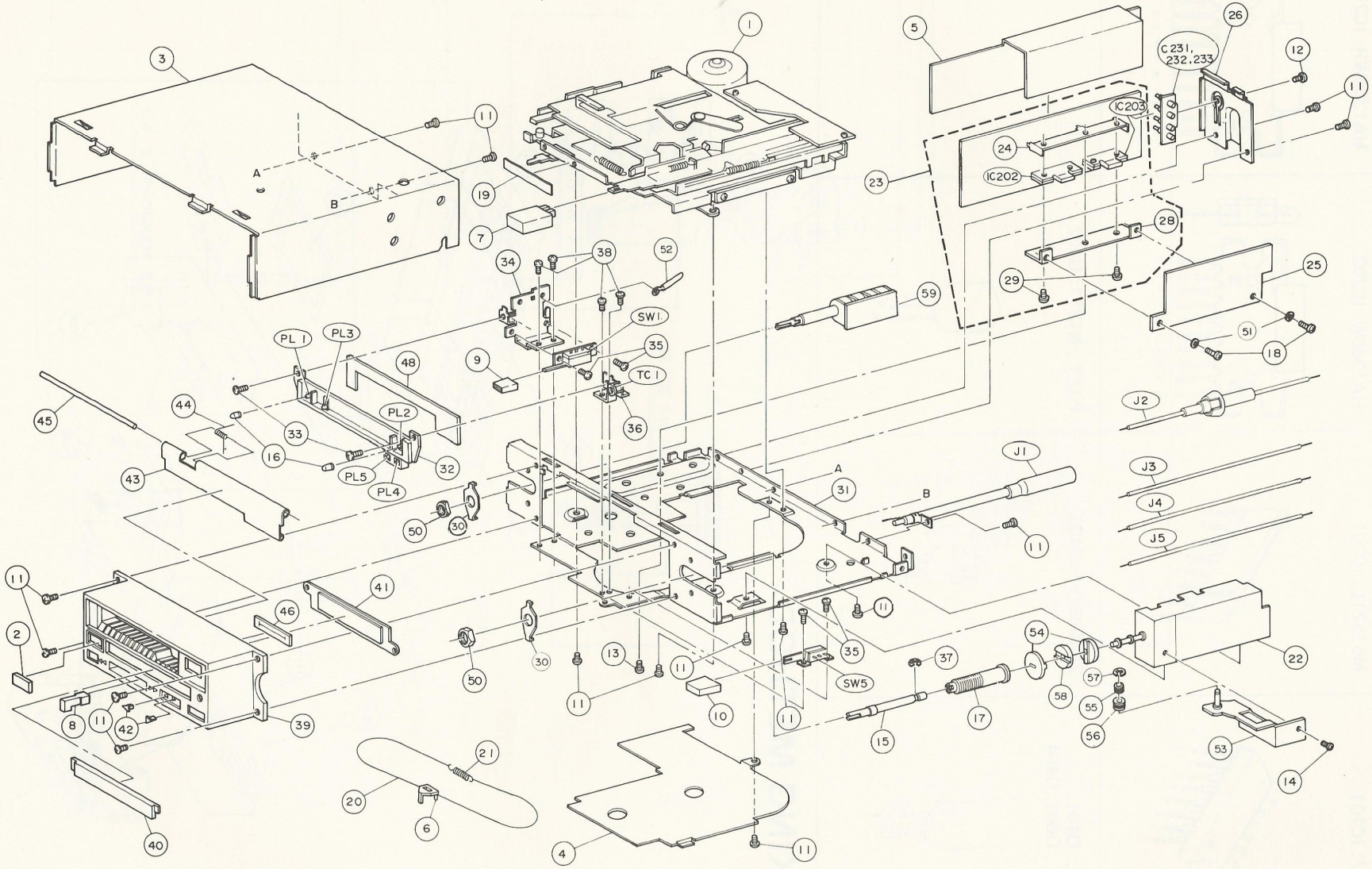

EXPLODED VIEW, CASSETTE MECHANISM

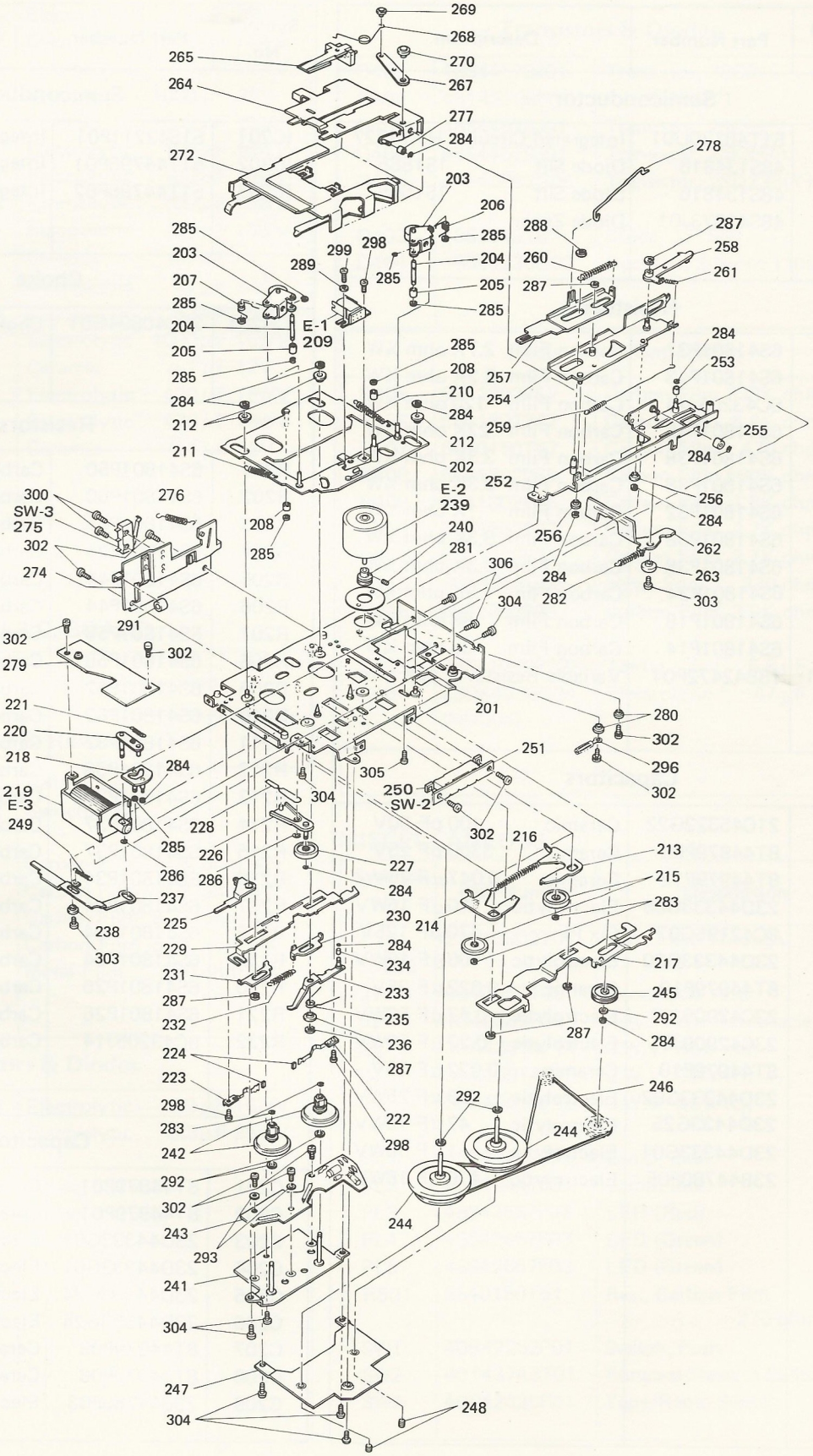

PARTS LIST

ASS'Y MPX P.C.BOARD

Symbol No.	Part Number	Description
Semiconductor		
IC102	51T40170U01	Integrated Circuit HA11227
D101	48S134816	Diode Slit 1S1555
D102	48S134816	Diode Slit 1S1555
Z101	48S41873J01	Diode Zener
Resistors		
R120	6S41801P37	Carbon Film 2.7K ohm ¼W
R121	6S41801P43	Carbon Film 8.2K ohm ¼W
R122	6C43205J14	Carbon Film 120 ohm ½W
R123	6S41801P48	Carbon Film 22K ohm ¼W
R124	6S41801P38	Carbon Film 3.3K ohm ¼W
R125	6S41801P38	Carbon Film 3.3K ohm ¼W
R126	6S41801P32	Carbon Film 1K ohm ¼W
R127	6S41801P38	Carbon Film 3.3K ohm ¼W
R128	6S41801P38	Carbon Film 3.3K ohm ¼W
R131	6S41801P34	Carbon Film 1.5K ohm ½W
R132	6S41801P18	Carbon Film 68 ohm ¼W
R133	6S41801P14	Carbon Film 33 ohm ¼W
VR101	18B42472P04	Variable Resistor 10K ohm
Capacitors		
C118	21C45322G22	Ceramic 100 pF 50V
C119	8T44979P05	Ceramic 3300 pF 25V
C120	8T44979P12	Ceramic 0.047 μF 25V
C121	23D44333G08	Electrolytic 10 μF 16WV
C122	8C42195G07	Fix Ps 470 μF 125V
C123	23D44333G30	Electrolytic 100 μF 10WV
C124	8T44979P10	Ceramic 0.022 μF 25V
C125	23C42909J02	Electrolytic 0.47 μF 50WV
C126	23C42909J01	Electrolytic 0.22 μF 50WV
C127	8T44979P10	Ceramic 0.022 μF 25V
C128	23D44333G02	Electrolytic 3.3 μF 25WV
C130	23D4433G25	Electrolytic 47 μF 16WV
C131	23D44333G01	Electrolytic 1 μF 50WV
C132	23B44780P05	Electrolytic 470 μF 16WV

ASSY., PRE-MAIN AMPLIFIER P.C.BOARD

Symbol No.	Part Number	Description
Semiconductors		
IC201	51S42211P01	Integrated Circuit M51521
IC202	51T44795P01	Integrated Circuit HA1366W
IC203	51T44795P02	Integrated Circuit HA1366WR
Choke		
CH201	25C40894G01	Choke Filter
Resistors		
R201	6S41801P50	Carbon Film 33K ohm ¼W
R202	6S41801P50	Carbon Film 33K ohm ¼W
R203	6S41801P25	Carbon Film 270 ohm ¼W
R204	6S41801P25	Carbon Film 270 ohm ¼W
R205	6S41801P44	Carbon Film 10K ohm ¼W
R206	6S41801P44	Carbon Film 10K ohm ¼W
R207	6S41801P58	Carbon Film 150K ohm ¼W
R208	6S41801P58	Carbon Film 150K ohm ¼W
R209	6S41801P62	Carbon Film 330K ohm ¼W
R210	6S41801P62	Carbon Film 330K ohm ¼W
R211	6S41801P32	Carbon Film 1K ohm ¼W
R212	6S41801P38	Carbon Film 3.3K ohm ¼W
R213	6S41801P38	Carbon Film 3.3K ohm ¼W
R214	6S41801P37	Carbon Film 2.7K ohm ¼W
R215	6S41801P37	Carbon Film 2.7K ohm ¼W
R216	6S41801P34	Carbon Film 1.5K ohm ¼W
R217	6S41801P34	Carbon Film 1.5K ohm ¼W
R218	6S41801P04	Carbon Film 4.7 ohm ¼W
R219	6S41801P04	Carbon Film 4.7 ohm ¼W
R220	6S41801P26	Carbon Film 330 ohm ¼W
R221	6S41801P26	Carbon Film 330 ohm ¼W
R222	6C43205J14	Carbon Film 120 ohm ½W
Capacitors		
C201	8T44979P01	Ceramic 1000 pF
C202	8T44979P01	Ceramic 1000 pF
C203	23D44333G01	Electrolytic 1 μF 50WV
C204	23D44333G01	Electrolytic 1 μF 50WV
C205	23D44333G24	Electrolytic 47 μF 10WV
C206	23D44333G24	Electrolytic 47 μF 10WV
C207	8T44979P08	Ceramic 0.01 μF
C208	8T44979P08	Ceramic 0.01 μF
C209	23B44780P03	Electrolytic 220 μF 16WV

Symbol No.	Part Number	Description
C210	23D44333G05	Electrolytic 4.7 μF 25WV
C211	23D44333G05	Electrolytic 4.7 μF 25WV
C212	23D44333G08	Electrolytic 10 μF 16WV
C213	23D44333G08	Electrolytic 10 μF 16WV
C216	8T44979P01	Ceramic 1000 pF 25V
C217	8T44979P01	Ceramic 1000 pF 25V
C218	23D44333G30	Electrolytic 100 μF 10WV
C219	23D44333G30	Electrolytic 100 μF 10WV
C220	23D44333G30	Electrolytic 100 μF 10WV
C221	23D44333G30	Electrolytic 100 μF 10WV
C222	8T44979P14	Ceramic 0.1 μF
C223	23D44333G24	Electrolytic 47 μF 10WV
C224	23D44333G24	Electrolytic 47 μF 10WV
C225	23B44780P06	Electrolytic 1000 μF 16WV
C226	21B41870J02	Ceramic o.1 μF 12V
C227	23B44780P05	Electrolytic 470 μF 16WV
C228	23B44780P05	Electrolytic 470 μF 16WV
C229	21B41780J02	Ceramic 0.1 μF 12V

ASSY., LEAD SWITCH P.C. BOARD

Symbol No.	Part Number	Description
	Switches & Resistors	
SW6	40T40641U02	Switch, Lead
SW7	40T40641U02	Switch, Lead
R401	6S41802P44	Carbon Film 10K ohm ¼W
R402	6S41802P44	Carbon Film 10K ohm ¼W
R403	6S41802P43	Carbon Film 8.2K ohm ¼W
R404	6S41802P43	Carbon Film 8.2K ohm ¼W
R414	6C43205J07	Metal Film 150 ohm ½W
	Capacitors & Diodes	
C401	23D44333G08	Electrolytic 10 μF 16WV
C402	23D44333G02	Electrolytic 3.3 μF 25WV
D401	48S134816	Diode, 1S1555
D402	48S134816	Diode, 1S1555

ASSY., AUTO REVERSE P.C. BOARD

Symbol No.	Part Number	Description
	Transistors & Diodes	
Q401	48S44578J01	Transistor, 2SC945
Q402	48T43738P01	P.U.T. N13T1
Q403	48S44578J01	Transistor, 2SC945L
Q404	48S44578J01	Transistor, 2SC945L
Q405	48S40662G05	Transistor, 2SD235(Y)
D403	48S134816	Diode, 1S1555
D404	48S40235G02	Rectifier, Silicone (10E2)
	Resistors & Capacitors	
R405	6S41802P62	Carbon Film 330K ohm ¼W
R406	6S41801P42	Carbon Film 6.8K ohm ¼W
R407	6S40150T57	Carbon Film 470 ohm ¼W
R408	6S41802P65	Carbon Film 560K ohm ¼W
R409	6S41802P35	Carbon Film 1.8K ohm ¼W
R410	6S41802P37	Carbon Film 2.7K ohm ¼W
R412	6S41802P37	Carbon Film 2.7K ohm ¼W
R413	6C44652G06	Metal Film 270 ohm 1W
R416	6S41802P39	Carbon Film 3.9K ohm ¼W
C403	23S41059P22	Tantal 6.8 μF 16WV
C407	23D44333G24 (NN004)	Electrolytic 47 μF 10WV

MISCELLANEOUS

Symbol No.	Part Number	Description
C231 ∿233	21B40802T01	Cap., Feed Through
J1	9C40957T09	Receptacle Ant.
J2	1D40889P34	Assy., Fuse Receptacle
J3	30A43014P14	C.W.V. BLU (L)
J4	30A43014P15	C.W.V. GRY (R)
J5	30A43014P16	C.W.V. BLK (G)
PL1	65B43447J01	Lamp, Indi.
PL2	65B43447J01	Lamp, Indi.
PL3	48S42667P02	LED (Red)
PL4	48S42667P03	LED (Green)
PL5	48S42667P03	LED (Green)
R501	6S40150T51	Res., Carbon Film 270 ohm ¼W
SW1	40B42262P01	Switch, Push
SW2	40T43743T01	Forward/Reverse Switch
SW3	40C42625P01	Tape/Radio Switch

Symbol No.	Part Number	Description
SW4	18T42279U01	Volume
SW5	40T43610P02	Switch, Push
TC1	20C43248J01	Cap., Variable (50 pF)
C214	21B41870J06	Cap., Cer. 0.05 μF
C215	21B41870J06	Cap., Cer. 0.05 μF
C501	21C45322G16	Cap., Cer. 33 pF
E1	88T43742P01	Head, Playback
E2	59C41596P02	Motor
E3	1A40341T01	Assy., Solenoid
VR101	18T42279U01	Volume
VR102	18T42279U01	Volume
VR103	18T42279U01	Volume
VR104	18T42279U01	Volume
VR105	18T42279U01	Volume

MAIN ASSEMBLY

Symbol No.	Part Number	Description
1	1U42000U75	Cassette Deck
2	33A42284U01	Name, Cover
3	15C44853P01	Cover, Top
4	27B43609P01	Chassis, Cover
5	14A44955P01	Insulator, Fiber
6	52A44956P01	Pointer Arm
7	36B44869P02	Knob, Eject
8	36B44870P02	Knob, FF & Rew
9	36B40038U02	Knob, SDK
10	36B44872P02	Knob, Program
11	3S44205G05	Scr., Tap. Tite (M3x0.5x5)
12	3S40011G58	Scr., Mch. (M2.6x0.45x3)
13	3C40014G24	Scr., Mch. (M3x0.5x10)
14	3C40014G05	Scr., Mch. (M3x0.5x5) Phl. Bind
15	47B42283U01	Shaft, Tuner
16	43A42996P01	Bushing, Lamp
17	47B42283U01	Shaft, Bush
18	3S40018G01	Scr., (M3x6)
19	14A42215J02	Insulator Fiber
20	30S43803G04 500	Dial Cord
21	41A43445J02	Spring Dial
22	77T42412U01	Tuner Unit
23	1V41500U53	Assy., Pre-Main Amp. Panel
24	7A44862P01	Brkt., IC Mtg.
25	1V41500U54	Assy., MPX Killer
26	7B44861P01	Brkt., Amp
27		— Not Used —
28	7A44863P01	Brkt., Heat Sink
29	3S40011G15	Scr., Mch. (M3x0.5x10) Phl. Rnd
30	4A43243P01	Washer, Dog
31	27D42720U01	Chassis Base
32	35B44856P01	Back, Scale Indicator
33	3S40011G69	Scr., (Mch. M2x0.4) Phl. Bnd
34	7B44854P01	Bracket, Switch
35	3S40011G97	Scr., Mch.(M2x0.4x2) Phl.Bnd
36	7B44855P01	Bracket, Stud
37	4C42091G04	Washer "C"
38	3S40011G73	Scr., Mch.(M2x0.4x3) Phl.Flat.
39	15D44868P04	Nose Piece
40	34B44858P02	Cover, Scale
41	34B44859P05	Scale, Dial
42	61A42633P02	Lens
43	15B40061U05	Cover, Dust (Door)
44	41A43598P01	Spring, Cover Dust
45	47A43599P01	Shaft, Cover Dust
46	15A43596P01	Cover, Sheet
47		— Not Used —
48	84B41334U01	Panel, Lamp
49		— Not Used —
50	2S40000G20	Nut, Hexagon
51	4S40071G01	Washer Spring Lock
52	29C41045P02	Lug Wrap Alound
53	7B42332U01	Bkt., Pulley
54	45A43033P01	Arm, Orudamu
55	49A43494J03	Pulley
56	49A43494J02	Pulley
57	4C42091G06	Washer "C"
58	45A43352P01	Arm, Orudamu
59	84A43115U01	Panel Volume

ASSY., PACKING

Symbol No.	Part Number	Description
101	1V41500U21	Assy., Pamphlet
101-1	68P44360P78	Owners, Manual
101-2	56B40230G12	Sack, Polyethylene
102	1V41500U55	Assy., Kit Installation
102-1	4S40072G11	Washer Tooth Lock (M5)
102-2	4S40070G08	Washer, Flat (Blk, Zinc)
102-3	3S40012G39	Scr., Tpg. (M5x0.8x20)
102-4	4S40070G10	Washer, Flat
102-5	2S40000G20	Nut, Hex. (M9x0.75)
102-6	3A43315G03	Scr., Mch. (M5x0.8x20)
102-7	2S40000G13	Nut, Hex. (M5x0.8)
102-8	65A40348G01	Fuse (5A)
102-9	45K538873	Arm, Adaptor
102-10	56B40230G27	Sack, Polyethylene
103	1B42338P10	Assy., Face Plate
103-1	33C42339P05	Face Plate

Symbol No.	Part Number	Description
103-2	56B40230G04	Sack Polyethylene
104	54B42124G02	Label
105	42B40994G05	Strap Receiver Mtg.
106	56B40230G22	Sack, Polyethylene
107	56C43246P22	Carton, Packing (Ind.)
108	56D44156P01	Tray, Packing
109	56D44156P02	Tray, Packing
110	56D44156P03	Tray, Packing
111	56A42069P02	Pad, Packing
112	1A44177U01	Assy., Knob Control

CASSETTE MECHANISM

Symbol No.	Part Number	Description
201	1C40560T01	Assy., Riv. Chassis
202	1A40565T01	Assy., Riv. Sub Chassis
203	1V40300T89,96	Assy., Pinch Roller (R) (L)
204	47A40365T01	Shaft, Bkt. Pinch Roller
205	43A40579T01	Bush
206	41A40376T01	Spring, Pinch Roller (R)
207	41A40368T01	Spring, Pinch Roller (L)
208	43A40420T02	Sleeve
209 (E1)	88T43472P01	Head, Playback
210	41B40348T03	Spring, Pull
211	41B40348T02	Spring, Pull
212	43A40422T01	Bush
213	1A40335T01	Assy., Idler Lever (A)
214	1A40336T01	Assy., Idler Lever (B)
215	49A40359T01	Idler, Play
216	41B40348T01	Spring Pull
217	45B40344T01	Lever, Select
218	1A40566T01	Assy., Cam Select
219 (E3)	1A40341T01	Assy., Plunger Solenoid
220	1A40567T01	Assy., Lever Cam Slide
221	41A40350T01	Spring, Cam Lever
222	41A40407T01	Spring, Brake (A)
223	41A40408T01	Spring, Brake (B)
224	43A40575T01	Rubber, Brake
225	1A40562T01	Assy., Lever Button R/F
226	45A40398T01	Arm, Idler R/F
227	49A40360T01	Idler, R/F
228	41A40355T01	Spring, R/F Idler Arm
229	1A40563T01	Assy., Lever R/F
230	45A40338T01	Lever, R/F (B)
231	45A40396T01	Lever, R/F (A)
232	41A40356T01	Spring, R/F Lever
233	1A40564T01	Assy., Lever R/F Lock
234	43A40420T01	Sleeve
235	41A40354T01	Spring, R/F Lock Lever
236	43A40422T02	Bush
237	45A40410T01	Lever, R/F
238	43A40582T01	Bush
239 (E2)	59C41596P02	Motor
240	49A40436T01	Pulley, Motor
241	1A40574T01	Assy., Riv. Bkt. Reel
242	1A40429T01	Assy., Reed Drive
243	1V44200P02	Assy., Lead Sw. Panel
244	49B40343T01	Flywheel
245	49A40351T01	Pulley, Wheel
246	42B40367T01	Belt, Drive
247	7A40418T01	Bracket, Flywheel
248	43A40406T01	Bearing, Flywheel
249	41B40347T03	Spring, Pull
250(SW2)	40T43743T01	Switch, Slide
251	84A43569P01	Panel, Sw.
252	1B40569T01	Assy., Riv. Bkt. Eject
253	43A40420T03	Sleeve
254	1B40570T01	Assy., Lever Eject (A)
255	43A40423T02	Bush
256	43A40426T01	Bush, Eject Lever
257	45A40424T01	Lever, Button Eject
258	1A40571T01	Assy., Lock Lever
259	41A40353T01	Spring, Eject Lever (A)
260	41B40347T04	Spring, Pull
261	41B40347T05	Spring, Pull
262	45A40397T01	Lever, Lock Release
263	43A40378T01	Bush, Release Lever
264	45B40345T01	Arm, Cassette Chassis
265	45B40346T01	Guide, Cassette
267	45A40392T01	Lever, Cassette Stop
268	41A40581T01	Spring, Cassette Chassis
269	46A40377T01	Stud, Spring Cassette Stop
270	46A40385T01	Stud, Lever Cassette Stop
272	27C40330T01	Chassis, Cassette
274	1A40573T01	Assy., Riv. Bkt. Chassis Guide
275(SW-3)	40C42625P01	Switch, Micro
276	41B40347T02	Spring, Pull
277	43A40423T01	Bush
278	45A40395T01	Link, Connection
279	1V40200T26	Assy., Reverse Panel
280	43A44380J01	Spacer, Motor
281	26A40362T01	Shield, Plate
282	41B40347T01	Spring, Pull
283	4C42091G12	Washer, "C"
284	4C42091G06	Washer, "C"
285	4C42091G05	Washer, "C"
286	4C42091G11	Washer, "C"
287	4C42091G04	Washer, "C"
288	4C42091G03	Washer, "C"
289	4S40070G33	Washer
290	4S40075G05	Washer, (S.T.W.)
291	75A40580T01	Rubber
292	4S40075G06	Washer (S.T.W.)

Symbol No.	Part Number	Description
296	29A737272	Lug
298	3S40011G33	Scr., Mch. (M2x4)
299	3S40011G57	Scr., Mch. (M2x5)
300	3S40011G87	Scr., Mch. (M2x8)
302	3C40014G12	Scr., Mch. (W/Cap, M2.6x5)
303	3S40011G84	Scr., Mch. (W/Cap, M2.6x6)
304	3S40011G68	Scr., Mch. (W/Cap, M2.6x5)
305	3S40014G09	Scr., Mch. (W/Cap, M3x5)
306	3S40011G88	Scr., Mch. (Flat, M3x5)

ALPINE ELECTRONICS INC.

- TOKYO OFFICE: NO. 1-7, YUKIGAYA OTSUKA-CHO OTA-KU TOKYO, 145 JAPAN
  TELEX: 246-6076 CABLE: ALPINEIWAKI PHONE: 03-729-0187
- IWAKI OFFICE: OYASAKU YOSHIMA-CHO IWAKI-SHI FUKUSHIMA-KEN, 970-11 JAPAN
  TELEX: 8927-61 AMIIWA J CABLE: ALPINEIWAKI
  PHONE: 0246-36-5830

68P40330F26-O

Printed in Japan