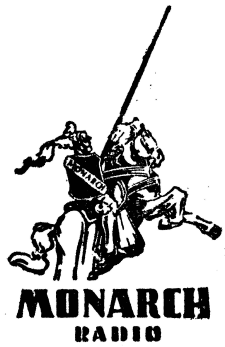

ECLIPSE RADIO PTY. LTD.

(A DIVISION OF ELECTRONIC INDUSTRIES LTD.)

11-21 STURT STREET, SOUTH MELBOURNE

TECHNICAL BULLETIN

BULLETIN CLP-1 **File : Receivers A/c.** **Date 20.7.48**

SUBJECT:- Type CLP Midget Mantel
3 Tube Tuned R.F. Receiver

For operation from:
200-260 volt A.C. Mains.

This Bulletin Contains:

1. Technical Specification.
2. General Description.
3. Alignment Procedure.
4. Circuit Diagram.
5. Voltage Table.
6. Component Parts List.
7. Coil and Transformer Connections.

ECLIPSE RADIO PTY. LTD.
(A DIVISION OF ELECTRONIC INDUSTRIES LTD.)
11-21 STURT STREET, SOUTH MELBOURNE

TECHNICAL BULLETIN

BULLETIN CLP-1 **File : Receivers A/c.** **Date 20.7.48**

SUBJECT:- Technical Specifications - Receiver CLP.

Tube Complement:

Type 6G8G R.F. Amplifier, Detector, Audio Amplifier.
Type 6V6GT Power Amplifier.
Type 5Y3GT H.T. Rectifier.

Tuning Range

540 Kc/s (Kilocycles per second) - 1640 Kc/s.
555 M. (Metres) - 182.9 M.

Power Consumption

40 watts (approximately).

General Description:

The receiver type CLP Midget Mantel is a 3 tube tuned radio frequency receiver, with a sensitivity of approximately 1200 microvolts for a power output of 50 milliwatts.

The circuit consists of tuned antenna and R.F. stages using a type 6G8G dicde-pentode tube as a reflexed R.F. amplifier and audio amplifier. Detection is provided by one of the diode plates of the type 6G8G tube. Volume control is achieved by application of variable negative bias to the control grid of the tube 6G8G tube, a type 6V6GT beam tube is used as a power amplifier and high tension is provided by a type 5Y3GT full wave rectifier.

Receivers produced for operation in Western Australia are equipped with a suitable transformer, and a type 6X5GT rectifier tube (see component parts list - electrical).

MONARCH RADIO

ECLIPSE RADIO PTY. LTD.

(A DIVISION OF ELECTRONIC INDUSTRIES LTD.)

11-21 STURT STREET, SOUTH MELBOURNE

TECHNICAL BULLETIN

BULLETIN CLP-1 **File : Receivers A/c.** **Date 20.7.48**

SUBJECT:- Alignment Procedure - Receiver Type CLP

Equipment:

Signal Generator
Dummy Antenna - 50 MMFD mica capacitor
Output Meter
Alignment Tool

Alignment Condition:

Load impedance - 5000 Ohms
Output level - 50 milliwatts
Volume Control - Full in (clockwise)

Procedure:

Set the dial pointer to the mark indicating end of travel on dial reading near 550 Kc/s. (Condenser plates fully meshed).

Operation	Generator Connection	Frequency	Dummy Antenna	Instructions
1	To antenna lead	1400 Kc/s	50 MMFD Mica Capacitor in series with generator	Turn dial pointer to 1400 Kc/s and peak aerial V.R.F. trimmer condensers.
2	To antenna lead	600 Kc/s	50 MMFD Mica Capacitor in series with generator	Check tracking.

Tuning Range - 540-1640 Kc/s.

SUBJECT:- Circuit Diagram Type CLP

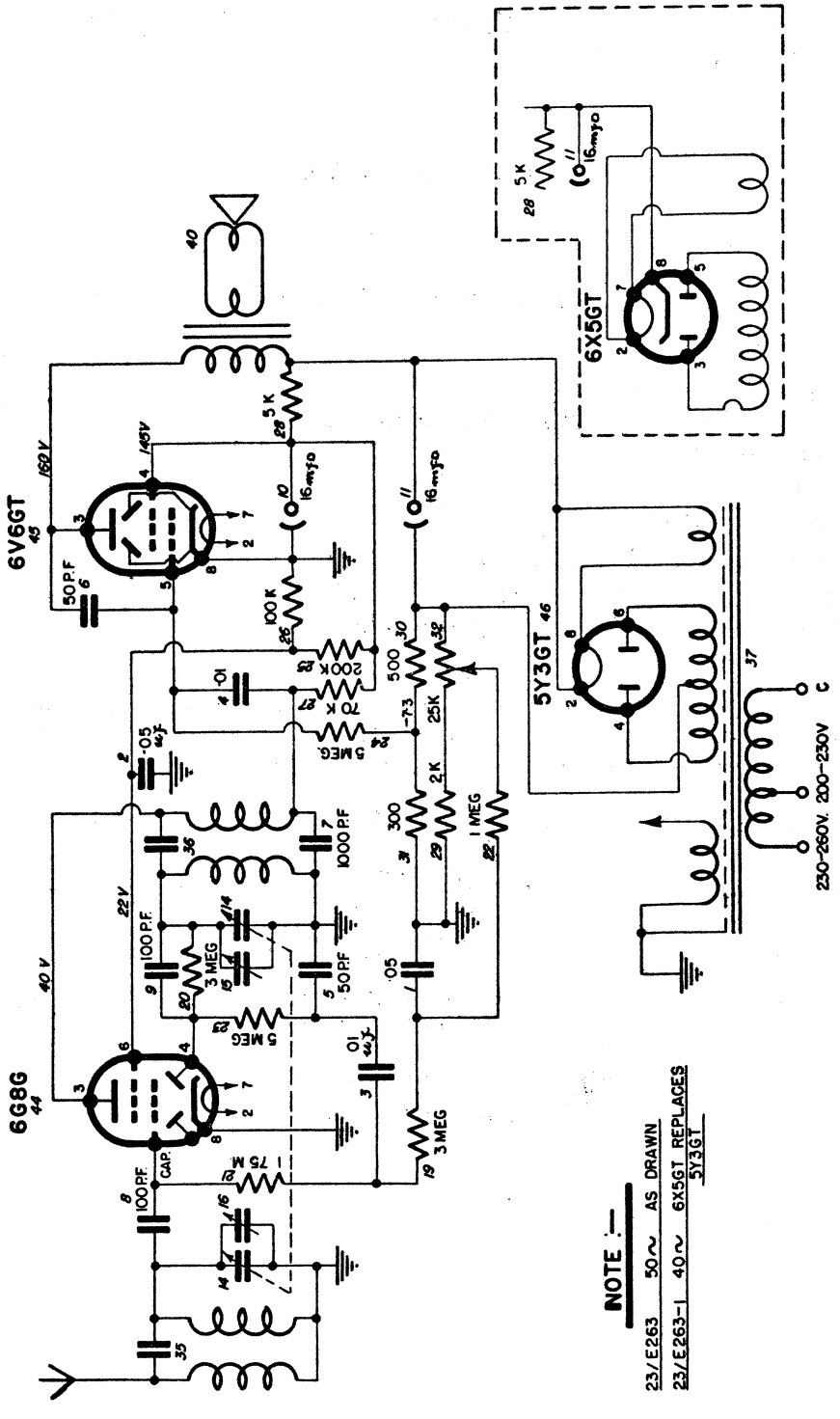

MONARCH RADIO

ECLIPSE RADIO PTY. LTD.

(A DIVISION OF ELECTRONIC INDUSTRIES LTD.)

11-21 STURT STREET, SOUTH MELBOURNE

TECHNICAL BULLETIN

BULLETIN CLP-1 **File : Receivers A/c.** **Date 20.7.48**

SUBJECT:- Voltage Table - Receiver Type CLP.

Equipment:

D.C. Volt Meter:-
1000 Ohm per volt meter with 0-250 and 0-10 volt scales.

A.C. Volt Meter:-
0-250 volt scale.

Conditions of Test:

All voltages measured from tube socket contacts to chassis with 230 volts 50 C.P.S. A.C. input. Volume control at maximum. Receiver tuned to 1000 Kc/s, no signal.

Tube	Fil.	Plate	Screen	Bias
6G8G	6.3 V.A.C.	40V	22V	—
6V6GT/G	6.3 V.A.C.	160V	145V	7.3V
5Y3GT/G	5 V.A.C.	175/175 R.M.S. Initial surge voltage across the input filter condenser circuit No. 11 is 265 volts dropping to normal operating value of 180 volts. Voltage drop across 5,000 ohm filter resistor circuit No. 28 is 15 volts.		

ECLIPSE RADIO PTY. LTD.

(A DIVISION OF ELECTRONIC INDUSTRIES LTD.)

11-21 STURT STREET, SOUTH MELBOURNE

TECHNICAL BULLETIN

BULLETIN CLP-1 **File Receivers A/c.** **Date 20.7.48**

SUBJECT:- Component Parts list:-Electrical - Receiver Type CLP

Circuit No.	Part Name	Rating	Tol ±	Part No. Eclipse
1.	.05 MFD Paper Condenser	200VW	20%	PC102
2.	.05 MFD Paper Condenser	200VW	20%	PC102
3.	.01 MFD Paper Condenser	600VW	20%	PC140
4.	.01 MFD Paper Condenser	600VW	20%	PC140
5.	.00005 MFD Mica Condenser	1000VT	10%	PC572
6.	.00005 MFD Mica Condenser	1000VT	10%	PC572
7.	.001 MFD Mica Condenser	1000VT	10%	PC570
8.	.0001 MFD Mica Condenser	1000VT	10%	PC571
9.	.0001 MFD Mica Condenser	1000VT	10%	PC571
10.	16 MFD Electrolytic Condenser	350VP	20%	PC283
11.	16 MFD Electrolytic Condenser	525VP	20%	PC298
12.				
13.				
14.	2 Gang Condenser			PC704
15.	3-55 MMFD Trimmer Condenser (R.F. Stage)			PC706
16.	3-55 MMFD Trimmer Condenser (Aerial Stage)			PC705
17.				
18.				
19.	3 Meg. Carbon Resistor	½ watt	10%	PR282
20.	3 Meg. Carbon Resistor	½ watt	10%	PR282
21.	1.75 Meg. Carbon Registor	½ watt	10%	PR248
22.	1 Meg. Carbon Resistor	½ watt	10%	PR246
23.	.5 Meg. Carbon Resistor	½ watt	10%	PR245
24.	.5 Meg. Carbon Resistor	½ watt	10%	PR245
25.	200,000 Ohm Carbon Resistor	1 watt	10%	PR414
26.	100,000 Ohm Carbon Resistor	½ watt	10%	PR103
27.	70,000 Ohm Carbon Resistor	1 watt	10%	PR617
28.	5,000 Ohm Carbon Resistor	1 watt	10%	PR304
29.	2,000 Ohm Carbon Resistor	½ watt	10%	PR253
30.	500 Ohm Carbon Resistor	½ watt	10%	PR274
31.	300 Ohm Wire Wound Resistor	½ watt	10%	PR258
32.	25,000 Ohm Carbon Resistor Potentiometer			PR651
33.				
34.				
35.	Antenna Transformer			PR787
36.	R.F. Transformer			PT788
37.	(Power Transformer (50 cycle operation)			PT853
	(Power Transformer (40 cycle operation)			PT857
38.				
39.				

ECLIPSE RADIO PTY. LTD.

(A DIVISION OF ELECTRONIC INDUSTRIES LTD.)

11-21 STURT STREET, SOUTH MELBOURNE

TECHNICAL BULLETIN

BULLETIN CLP-1 **File : Receivers A/c.** **Date 20.7.48**

SUBJECT:- Component Parts List – Electrical – Receiver Type CLP–(Continued)

Circuit No.	Part Name	Rating	Tol. ±	Part No. Eclipse
40.	5,000 Ohm Permag. Speaker			K141
41.	Shield Valve			PM217
42.	Dial Lamp			PM678
43.	Socket, 8 pin			PM532
44.	Tube Type 6G8G			6G8G
45.	Tube Type 6V6GT/G			6V6GT/G
46.	(Tube Type 5Y3GT/G (50 cycle operation) (Tube Type 6X5GT/G (40 cycle operation)			{5Y3GT/G {6X5GT/G

ECLIPSE RADIO PTY. LTD.

(A DIVISION OF ELECTRONIC INDUSTRIES LTD.)

11-21 STURT STREET, SOUTH MELBOURNE

TECHNICAL BULLETIN

MONARCH RADIO

BULLETIN CLP-1 **File Receivers A/c.** **Date 20.7.48**

SUBJECT:- Component Parts List – Mechanical – Receiver Type CLP

Part Name	Eclipse Part No.
Grid Clips	873/495
Power Contact Strip Assy.	A105/E243
Terminal Strip – single lug	A107/30C
Terminal Strip – three lug	A103/509
Single pin Socket – top	19/96
– bottom	18/96
– contact	15/58-2
Diffuser Assembly	A102/E230
Spring – Diffuser Mount	19/E230
Dial Pointer Assembly	A103/E230
"U" Type Speed Nuts	80/E200
Speed Nuts – Trim-plate – Dial Glass	227/250
Valve Shield Earth Contact	22/30C
Trim Plate	7/E230
Springs – Knob	56/71
Felt Washer – Knob	56/30C
Drive Spindle	6/E230
Collar – Drive Spindle	11/628
Bowden Cable – Condenser coupling	11/609-4
Spring – Jockey Arm	8/613
Pulley Stud	18/E233-2
Jockey Pulley Bracket	13/E230
Jockey Arm Stud	18/87-1
Guide Pulley (2)	23/71
Pulley Stud	18/E233-4
Dial Lamp Socket	338/30C
Shield – Dial Lamp	6/640
Dial Cord (27" long)	7/282
Cabinet	1/E230
Dial Reading	10/E263
Knobs	4/E252

MONARCH RADIO

ECLIPSE RADIO PTY. LTD.

(A DIVISION OF ELECTRONIC INDUSTRIES LTD.)

11-21 STURT STREET, SOUTH MELBOURNE

TECHNICAL BULLETIN

BULLETIN CLP-1 **File · Receivers A/c.** **Date 20.7.48**

SUBJECT:- Coil Connections - Receiver Type CLP

Earth

Inside Secondary (Grid)

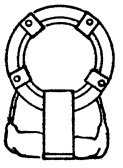

Earth

Antenna (Outside Primary)

Aerial Coil

Earth

Tuning Condenser (R.F. Section)

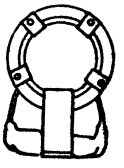

Br (Junction of Circuit No's. 7 , 4, 27)

6G8G Plate

R.F. Coil
