Private and Confidential

For Trade Use Only

"HIS MASTER'S VOICE"

SERVICE MANUAL

for

FIVE-VALVE PLUS METAL RECTIFIER

MAINS - OPERATED

STEREO - RADIOGRAM CHASSIS

TYPE N1

•

THE GRAMOPHONE COMPANY LIMITED
(Incorporated in England)
HOMEBUSH :: N.S.W.

•

Part No. 682-8301

TECHNICAL SPECIFICATION

POWER SUPPLY:

200 to 250 volts, 40 to 50 c.p.s.
(Receiver only).

CONSUMPTION:

50 watts.

FREQUENCY RANGE:

540 Kc/s to 1600 Kc/s.

I.F. FREQUENCY:

457.5 Kc/s.

VALVE COMPLEMENT:

6AN7	Frequency Changer
6N8	I.F. Amp. — Demod. — A.V.C.
12AX7	Voltage Amplifier
6M5	Power
6M5	Power
C3B	Rectifier.

DIAL LAMPS:

6.3 volts, 0.3 amp.

OUTPUT IMPEDANCE

3.5 ohms at 400 c.p.s.

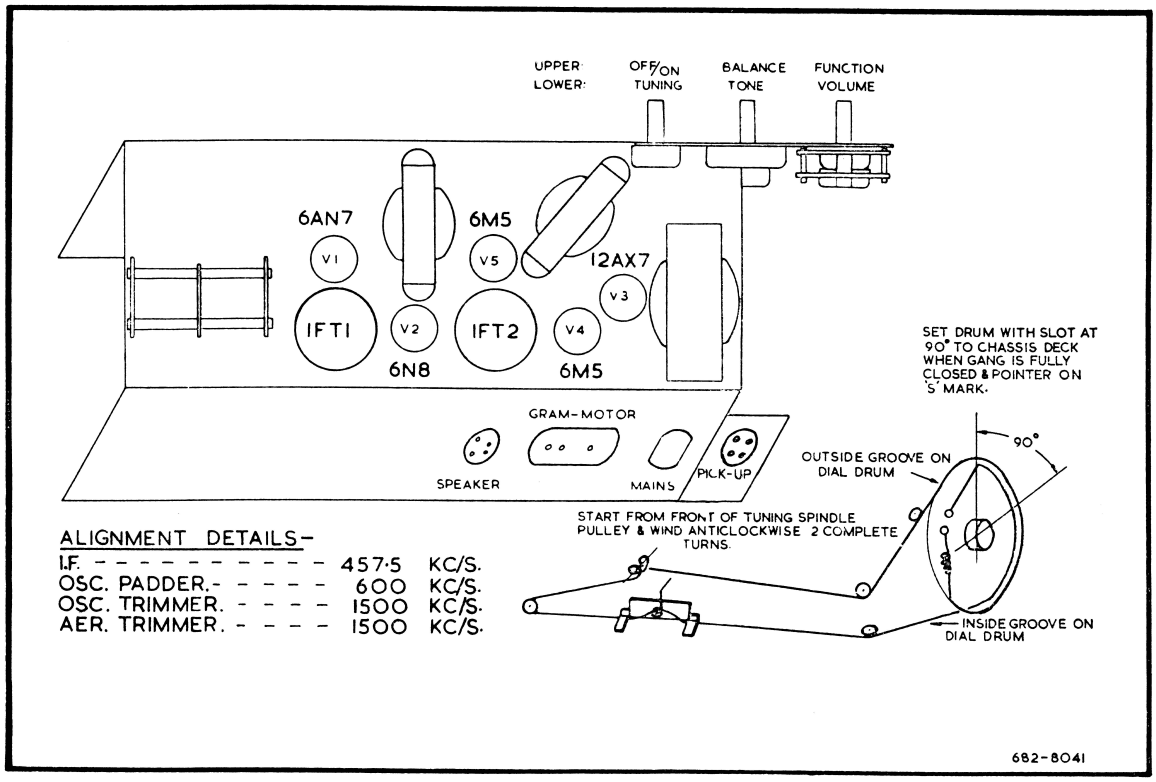

RECEIVER ALIGNMENT PROCEDURE

In any case where a component replacement has been made in either the tuned I.F. or R.F. circuits of a receiver, all circuits must be realigned. I.F. alignment should always precede R.F. alignment, and even if only one coil has been serviced, the whole of the realignment should be done in the order given. An output meter should be connected across the voice coil terminals of the speaker to indicate that the circuits are tuned to resonance. In carrying out the following operations, it is important that the input to the receiver from the signal generator should be kept low and progressively reduced as the circuits are brought into line, so that the output meter reading does not exceed about 1 volt.

Note: Calibration marks are provided on the lower section of the dial glass. Beginning at the left, these marks correspond to:

(1) Pointer setting.
(2) 600 Kc/s.
(3) 980 Kc/s.
(4) 1500 Kc/s.

Corresponding calibration marks are embossed on the dial back-plate.

I.F. ALIGNMENT

(1) Rotate the volume control fully clockwise and fully enmesh the tuning capacitor vanes, turn the tone control to minimum top cut position. Connect the output leads of the signal generator to the grid of the 6AN7 frequency changer valve through a 0.1 mf. capacitor.

(2) Tune signal generator to exactly 457.5 c/s.

(3) Adjust the I.F. transformer tuning cores for maximum reading on the output meter, commencing with the second I.F. transformer and following with the first.

(4) Continue this alignment on each transformer in turn until no greater output can be obtained. It is necessary to repeat this procedure twice to ensure correct alignment.

Note: If the tuning cores are screwed too far in, it may be possible to obtain a false peak, due to coupling effects between the iron cores. Start alignment of each individual transformer by first screwing its core well out, and then advancing the core into the coil until resonance is obtained.

R.F. ALIGNMENT (Medium-Wave)

(1) With controls set as for I.F. alignment, connect signal generator output leads in series with a 200 mmF. capacitor to the aerial lead and chassis of the receiver.

(2) Check that, when the gang capacitor is fully enmeshed, the pointer coincides with the setting line on the extreme left of the dial scale. If necessary, the pointer must be adjusted at the point where the drive cord is attached to the pointer carrier.

(3) Tune signal generator to 600 Kc/s.

(4) Rotate tuning knob until the pointer is exactly over the 600 Kc/s. calibration mark, and adjust the padder screw for maximum response.

(5) Tune signal generator to 1500 Kc/s.

(6) Rotate tuning knob until the pointer coincides with the 1500 Kc/s. calibration mark, and adjust the oscillator trimmer and aerial trimmer in turn for maximum response.

(7) Repeat operations (3) to (6) inclusive for proper alignment.

ADDITIONAL DATA

Any further service information may be obtained by addressing an inquiry to the "Service Division, E.M.I. (Aust.) Limited, 575-577 Parramatta Road, Leichhardt (telephone LM 1491).

During the course of production of this receiver the Company reserves the right, without notice, to make any modification or improvements in design which may be necessary to meet prevailing conditions.

Information concerning changes, which is likely to be of benefit to retailers, and servicemen, will be notified as far as possible by issuing a Technical Data Sheet.

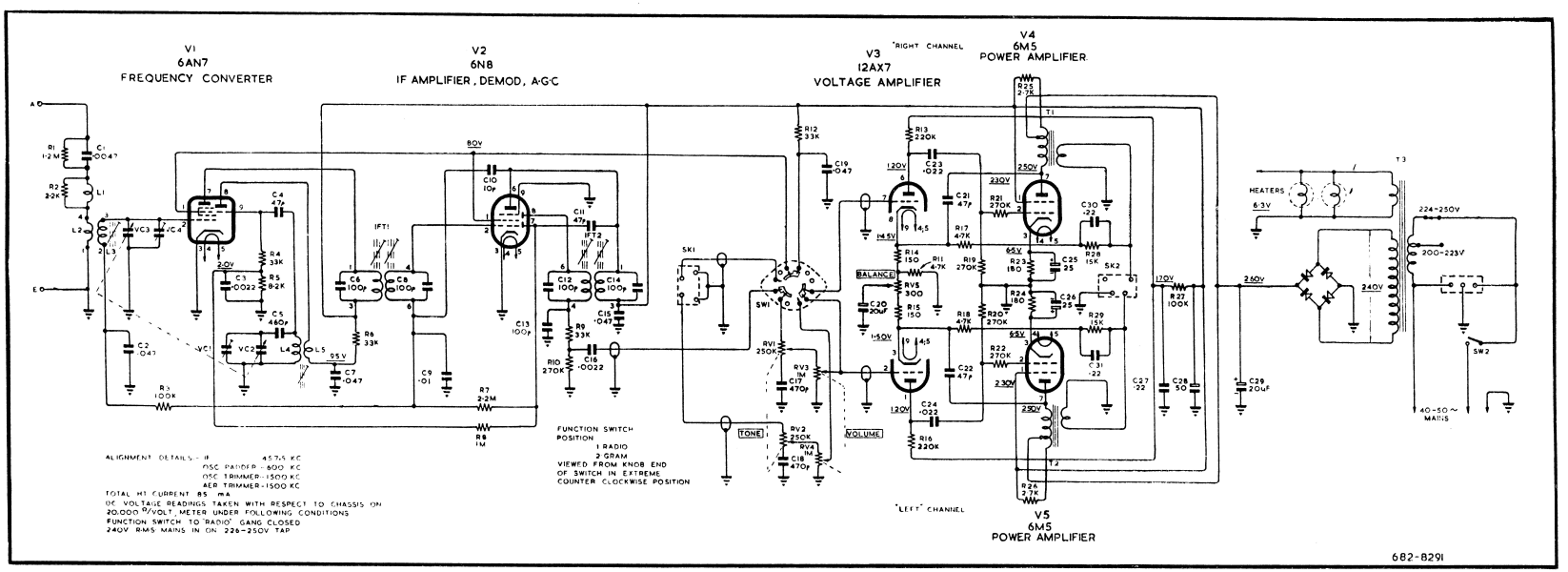

CIRCUIT DIAGRAM — CHASSIS TYPE N1

In chassis produced prior to S/N 01100, R17 was connected direct between pin 8 of V3 and secondary of T1. R18 was connected direct between pin 3 of V3 and secondary of T2.

R28, R29, R11, C30, C31 were not used. C20 was 10 mF, and a 1 M ohm resistor was connected across the active contacts of SK1.

PARTS LIST — TYPE N1

RESISTORS

Ref.	Part No.	Description	Ref.	Part No.	Description
R1	742-0982	1.2 Megohm ± 10% 1W.	R15	746-0261	150 ohm ± 10% ½W.
R2 } L1 }	259-0712	2,200 ohms ± 10% 1W.	R16	742-0452	220,000 ohm ± 20% 1W.
			R17	740-0072	4,700 ohm ± 10% ½W.
R3	740-0142	100,000 ohm ± 10% ½W.	R18	740-0072	4,700 ohm ± 10% ½W.
R4	740-0242	33,000 ohm ± 10% ½W.	R19	740-0172	270,000 ohm ± 10% ½W.
R5	740-0792	8,200 ohm ± 10% ½W.	R20	740-0172	270,000 ohm ± 10% ½W.
R6	742-0382	33,000 ohm ± 20% 1W.	R21	740-0172	270,000 ohm ± 10% ½W.
R7	740-0202	2.2 Megohm ± 10% ½W.	R22	740-0172	270,000 ohm ± 10% ½W.
R8	740-0532	1.0 Megohm ± 20% ½W.	R23	746-0272	180 ohm ± 10% ½W.
R9	740-0242	33,000 ohm ± 10% ½W.	R24	746-0272	180 ohm ± 10% ½W.
R10	740-0712	270,000 ohm ± 10% ½W.	R25	742-0262	2,700 ohm ± 10% 1W.
R11	740-0072	4,700 ohm ± 20% ½W.	R26	742-0262	2,700 ohm ± 10% 1W.
R12	742-0382	33,000 ohm ± 20% 1W.	R27	740-0142	100,000 ohm ± 10% ½W.
R13	742-0452	220,000 ohm ± 20% 1W.	R28	740-0092	15,000 ohm ± 10% ½W.
R14	746-0261	150 ohm ± 10% ½W.	R29	740-0092	15,000 ohm ± 10% ½W.

CAPACITORS

Ref.	Part No.	Description	Ref.	Part No.	Description
C1	271-0391	0.0047 mfd Ceramic	C17	280-1831	470 p ± 10% 600V.
C2	279-1081	0.047 mfd ± 20% 200V.	C18	280-1831	470 p ± 10% 600V.
C3	279-1541	0.0022 mfd ± 20% 400V.	C19	279-1701	0.047 mfd ± 20% 400V.
C4	273-0541	47 p ± 10%	C20	269-0461	20 mfd 10V.
C5	273-0301	460 p ± 5 p	C21	273-0541	47 p ± 10%
C6	273-0331	100 p ± 10%	C22	273-0541	47 p ± 10%
C7	279-1701	0.047 mfd ± 20% 400V.	C23	280-1411	0.022 mfd ± 20% 400V.
C8	273-0331	100 p ± 10%	C24	280-1411	0.022 mfd ± 20% 400V.
C9	279-4621	0.01 mfd ± 10% 400V.	C25	269-0571	25 mfd 25V. W.
C10	273-0011	10 p ± 10%	C26	269-0571	25 mfd 25V. W.
C11	279-0541	47 p ± 10%	C28	269-0571	50 mfd 350V. W.
C12	273-0331	100 p ± 10%	C29	269-0571	20 mfd 350V. W.
C13	273-0051	100 p ± 10%	C27	279-1781	0.22 mfd ± 10% 400V.
C14	273-0331	100 p ± 10%	C30	279-1161	0.22 mfd ± 20% 200V.
C15	279-1701	0.047 mfd ± 20% 400V.	C31	279-1161	0.22 mfd ± 20% 200V.
C16	280-1291	0.0022 mfd ± 20% 400V.			

MISCELLANEOUS

Ref.	Part No.	Description	Ref.	Part No.	Description
L1-R2	259-0712	Coil, Aerial Loading	RV5	677-0711	Balance Control, 300 ohm
L2-L3	253-0172	Coil, "Loopstick," Aerial	SW1	855-0371	Switch, Function
L4-L5	257-0086	Coil, M.W. Oscillator	SW2	855-0361	Switch, Off-On
VC2 } VC3 }	281-0063	Capacitor, 2-gang, variable	V1	932-0151	Valve, 6AN7
			V2	932-0201	Valve, 6N8
VC1	281-0031	Capacitor, Trimmer	V3	932-0401	Valve, 12AX7
VC4	281-0111	Capacitor, Trimmer	V4	932-0291	Valve, 6M5
IFT1 } IFT2 }	906-0062	Transformer, IF (1st & 2nd)	V5	932-0291	Valve, 6M5
				932-1061	Rectifier, C3B
T1	905-0321	Transformer, Output		932-0391	Lamp, 6.3V., 0.3 amp., M.E.S.
T2	905-0321	Transformer, Output			
T3	904-0291	Transformer, Power		794-1071	Scale, Dial
RV1 } RV2 }	677-0721	Tone Control, 2-gang (250,000 ohms)		297-0011	Cord, Dial Drive
				381-0033	Drum
RV3 } RV4 }	677-0731	Volume Control, 2-gang (1.0 Megohm)		677-0333	Pointer, Assembly
				840-0102	Spring Dial, Drive

THE GRAMOPHONE COMPANY LIMITED

(*Incorporated in England*)

HOMEBUSH - NEW SOUTH WALES