CAR AUDIO CE302A/TA113A/EQ102A + CR511A

Service
Service
Service

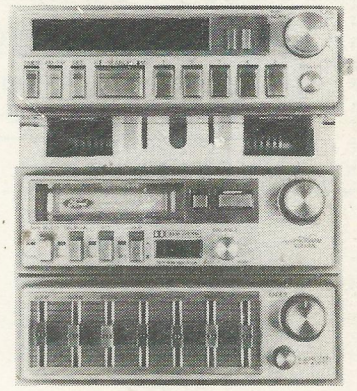

Service Manual

A car audio system supplied as standard in Ford LTD models from 1985, and available as an option in selected other vehicles. It comprises the CS882A assembly of individual component units for tuner, cassette deck and equaliser, together with a separate power amplifier.

Item	Description	Ford Part No.
CS882A	CE302A/TA113A/EQ102A Assy.	84DA - 18K876 - AA
CE302A	Tuner	84DA - 18B827 - AA
TA113A	Cassette deck	84DA - 18B975 - AA
EQ102A	Equaliser	84DA - 18T803 - AA
CR511A	Power amplifier and bracket assy.	84DA - 18T806 - AA
	Power amplifier only	84DA - 18T805 - AA
Interconnecting cable, CS822A to CR511A (Philips Part No. 4802 321 17067)		84DA - 18B864 - AA

Contents

	Page
Introduction	1
General description	2
Connections and specifications	3
CE302A - Linear circuit	4
- Linear PCB layout	5
- Digital circuit	6
- Digital PCB layout	7
- Wiring on PCB's	8
- Adjustments	9, 10
- Semiconductor info.	11
- Exploded view	12
TA113A - Photo	13
- Adjustments, etc.	14
TA113A - Circuit diagram	15
- Wiring on PCB	16
- Exploded view (mech)	17
- Exploded view (tapedeck)	18
- Parts list	19
EQ102A - Photo	19
- Circuit diagram	20
- Wiring on PCB	21
- Expl. view and parts list	22
CR511A - Photo	23
- Circuit description	24, 25
- Circuit diagram	26
- Wiring on PCB	27
- Expl. view and parts list	28

Subject to modification
4802 725 17126
Printed in Australia

PHILIPS

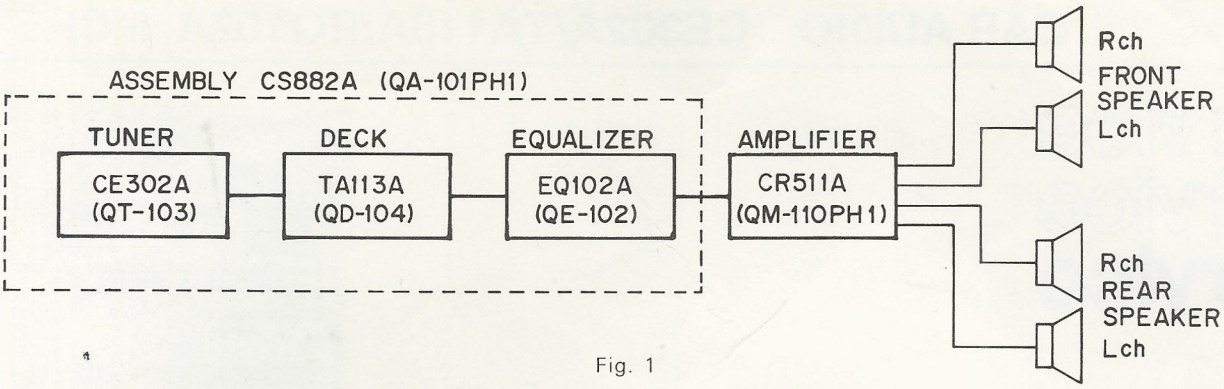

Fig. 1

GENERAL DESCRIPTION

CE302A - an AM/FM micom tuner with a "programme-preset" system, which allows the time (in hours and minutes), the band (AM or FM) and the channel number (channels 1 to 5) to be programmed. The local oscillator is tuned by a PLL synthesiser system which is controlled by a micro-computer. Three ways of tuning are available - preset button tuning (5AM/5FM), search tuning, and scan tuning. ATC (automatic tone control) is provided on FM reception.

TA113A - an auto-reverse cassette deck equipped with Dolby * NR. An LTM (Life-time Metal) playback head is used and controls are provided for loudness, attenuator, Dolby * NR, and tape selection.

Dolby * NR is a noise reduction system manufactured under licence from Dolby Laboratories Licensing Corporation. "Dolby" and the double-D symbol are trademarks of Dolby Laboratories Licensing Corporation.

EQ102A - a graphic equaliser in which the audio-frequency range is divided into 7 sections. The gain of each section is separately adjustable. Equaliser-disable and fader controls are built-in, and an LED indicator provides for easier operation at night.

CR511A - a 4-amplifier high power amplifier employing four BTL circuits, used to drive four speakers.

(Note: the amplifier is mounted separately from the tuner/cassette deck/equaliser component system).

INTER CONNECTIONS

CE302A

1	NC
2	GROUND
3	NC
4	LINE OUT (Rch)
5	LINE OUT (Lch)
6	CONTROL OUT
7	VCC IN
8	ACC (+13.2V)

A	BACK UP (+13.2V)
B	DIMMER (+13.2V)
C	GROUND

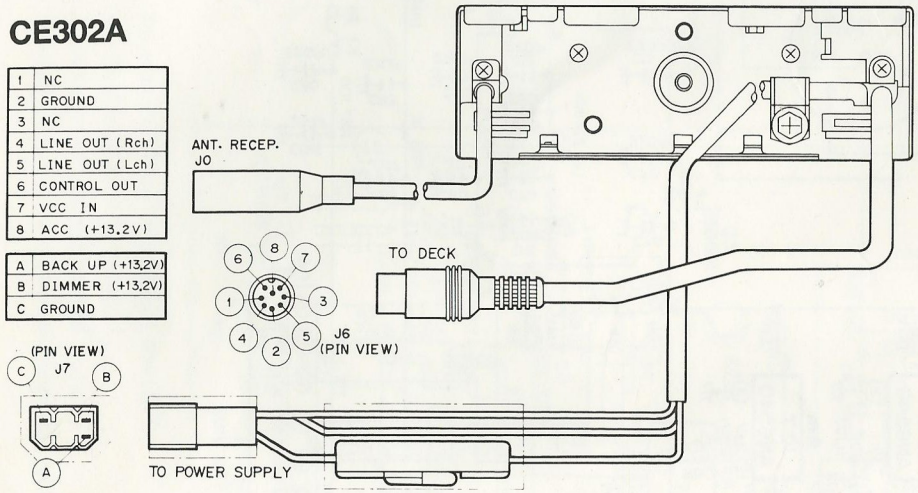

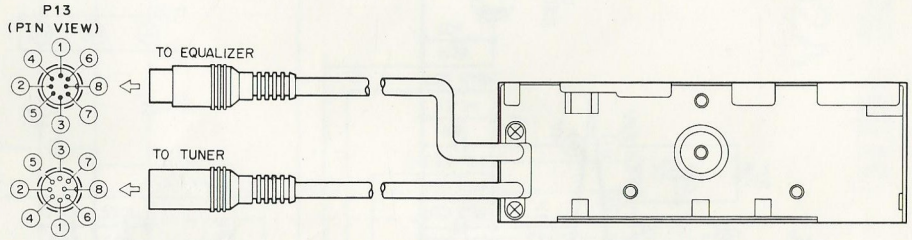

PIN	P13	J13
1	NC	NC
2	GROUND	GROUND
3	NC	NC
4	LINE OUT (Rch)	LINE IN (Rch)
5	LINE OUT (Lch)	LINE IN (Lch)
6	CONTROL OUT	CONTROL IN
7	VCC IN	VCC OUT
8	ACC (+13.2V)	ACC (+13.2V)

TA113A

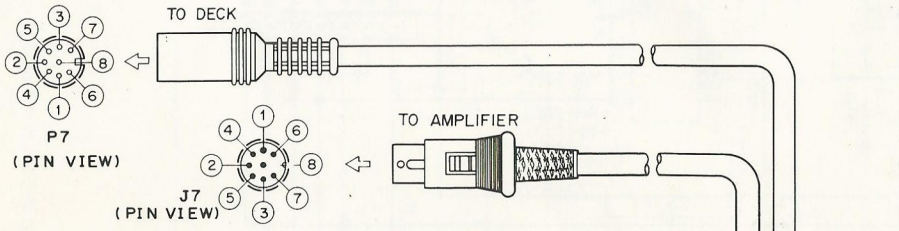

PIN	J7	P7
1	FRONT LINE OUT (Rch)	NC
2	GROUND	GROUND
3	FRONT LINE OUT (Lch)	NC
4	REAR LINE OUT (Rch)	LINE IN (Rch)
5	REAR LINE OUT (Lch)	LINE IN (Lch)
6	CONTROL OUT	CONTROL IN
7	VCC IN	VCC OUT
8	ACC (+13.2V)	ACC (+13.2V)

EQ102A

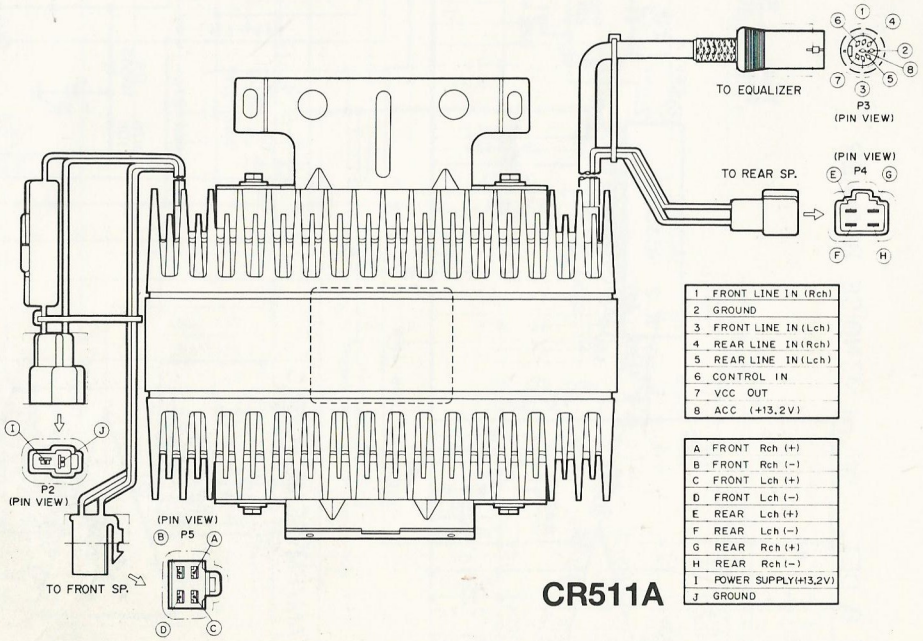

1	FRONT LINE IN (Rch)
2	GROUND
3	FRONT LINE IN (Lch)
4	REAR LINE IN (Rch)
5	REAR LINE IN (Lch)
6	CONTROL IN
7	VCC OUT
8	ACC (+13.2V)

A	FRONT Rch (+)
B	FRONT Rch (−)
C	FRONT Lch (+)
D	FRONT Lch (−)
E	REAR Lch (+)
F	REAR Lch (−)
G	REAR Rch (+)
H	REAR Rch (−)
I	POWER SUPPLY (+13.2V)
J	GROUND

CR511A

Fig 2

SPECIFICATIONS

CE302A	**AM**	**FM**
Tuning range	522-1,602 kHz (9 kHz steps)	88.1-107.9 MHz (0.1 MHz steps)
Intermediate Frequency	450 kHz	10.7 MHz
Power supply	12 volt car battery, negative to ground	
- voltage	13.2V DC	
- current	15mA approx. on stand-by 0.5 Amp. approx. maximum	
Dimensions	150 x 50 x 135mm (W x H x D)	
Weight	1kg approx	

TA113A	
No. of tracks	4 track 2 channel
Tape	Stereo/Monaural compact cassette
Tape speed	4.76 cm/sec (1⅞ i.p.s.)
Input - impedance	10kΩ approx.
Input - voltage	100mV
Output - load impedance	10kΩ to 20kΩ
Output - voltage	100mV
Take-up torque	40-55 g-cm
Power supply	12V car battery (13.2V DC), negative to ground
Dimensions	150 x 50 x 135mm (W x H x D)
Weight	1.4kg

EQ102A	
Input - impedance	10kΩ to 20kΩ
Input - voltage	100mV
Output - impedance	10kΩ to 20kΩ
Output - voltage	100mV
Power supply	12V car battery, negative to ground
- voltage	13.2V DC
- current	0.75amp. approx.
Dimensions	140 x 50 x 75mm (W x H x D)
Weight	0.65kg.

CR511A	
Input - impedance	9kΩ x 4 channel
Input - voltage	100mV
Frequency response	20 Hz to 40 kHz ± 3db (@ 1 kHz 1W output)
Power output	12 ± 3 Watt x 4
Speaker impedance	4Ω x 4 channel
Power supply	12V car battery, negative to ground
- voltage	13.2V DC
- current	2 amp. @ 1 Watt output 8 amp. @ max. output
Dimensions	199 x 40 x 130mm (W x H x D)
Weight	1.3kg

SCHEMATIC (LINEAR)

CE302A

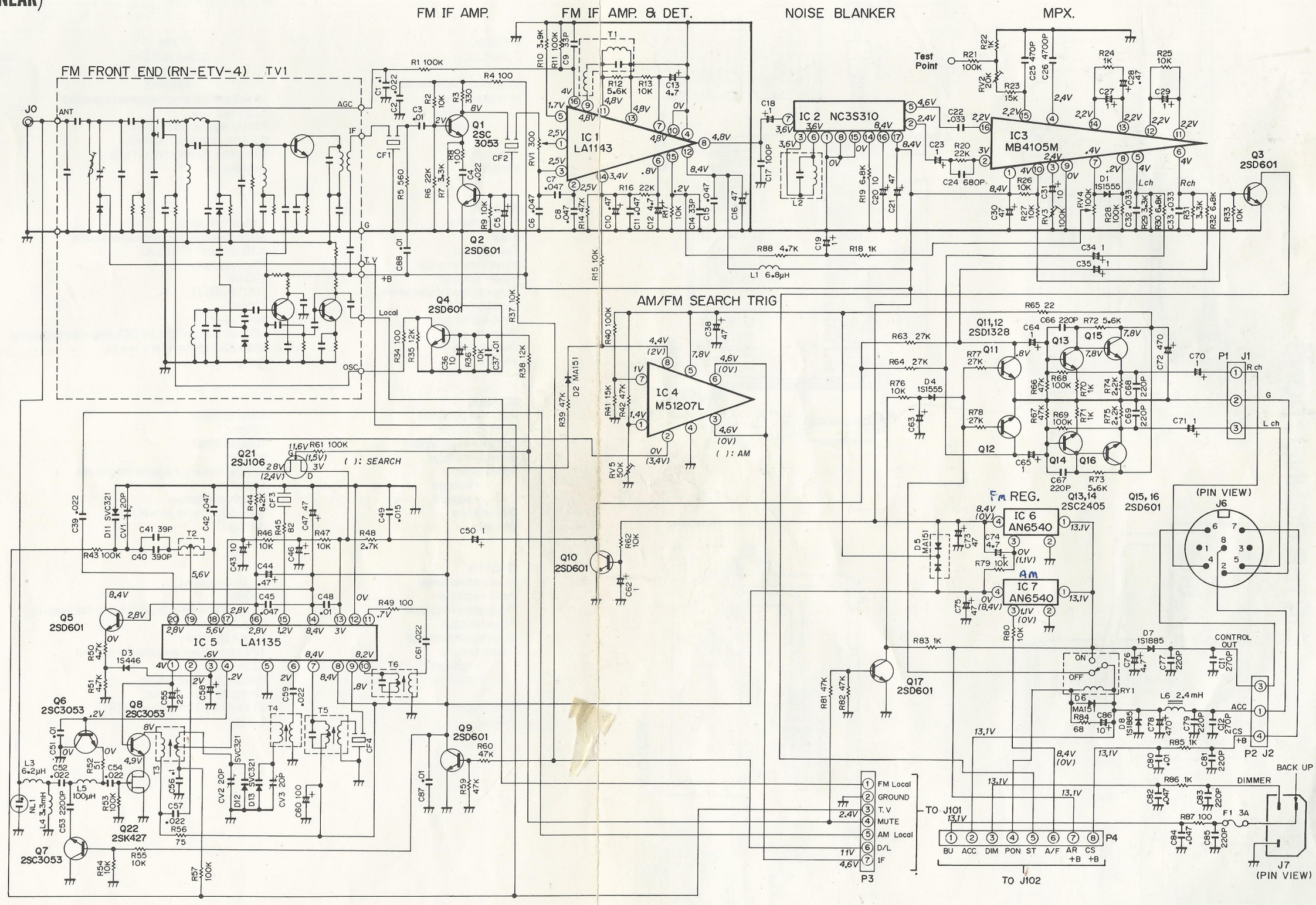

Fig. 3

NOTES:
1. All capacitance in Micro farad, $P=10^{-12}$
2. All resistance in ohm, $K=10^{3}$
3. All inductance in henry, $m=10^{-3}$, $\mu=10^{-6}$
4. DC voltage against the chassis measured with 100k ohm/volt meter, power supply set at +13.2 VDC, no signal input.

LINEAR PC BOARD
CE302A

ONLY SPOT FOR 12V+ take off for elect aerial That is controlled by cars & RADIO alike

ITS A WIRE LINK

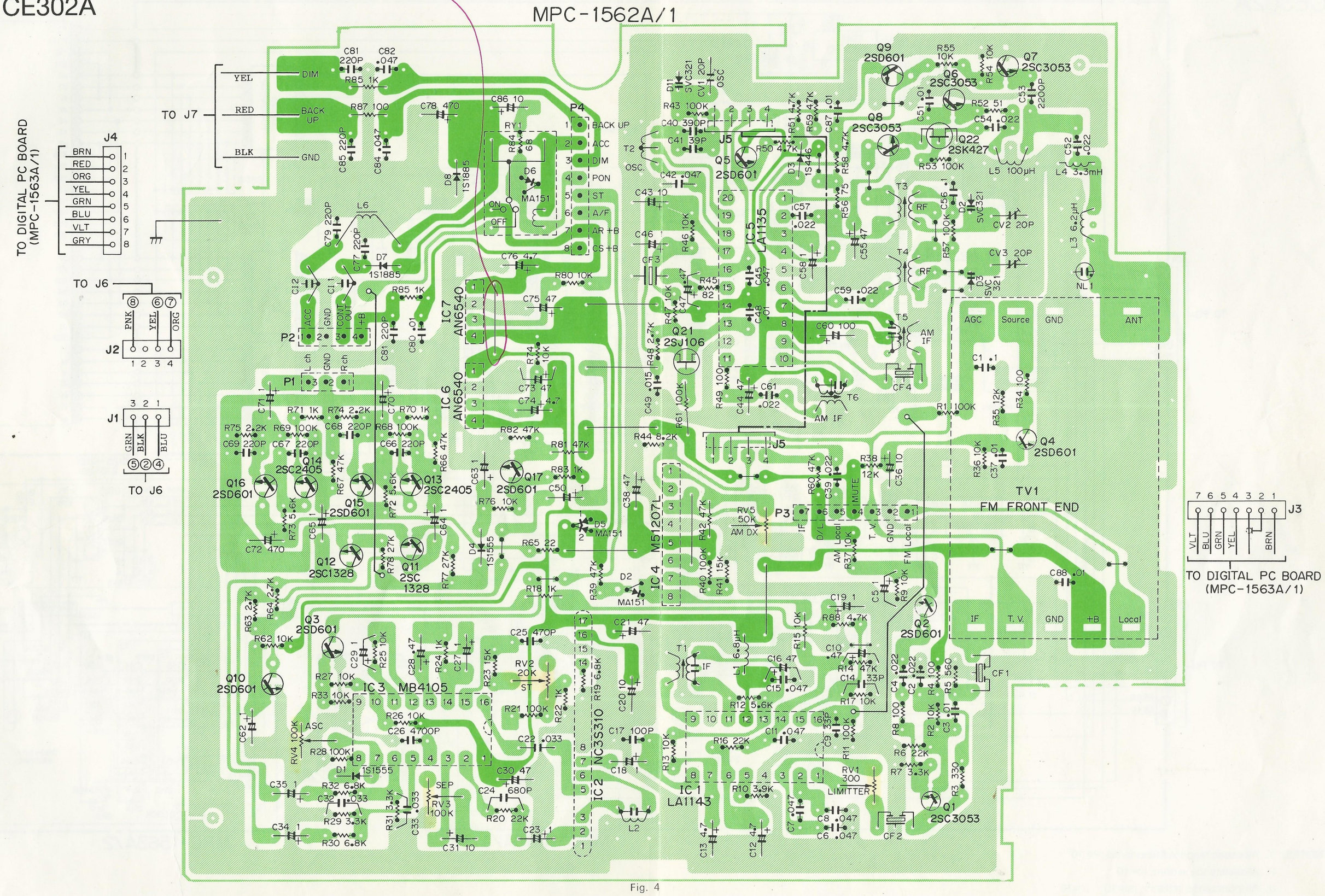

Fig. 4

SCHEMATIC (DIGITAL)
CE302A

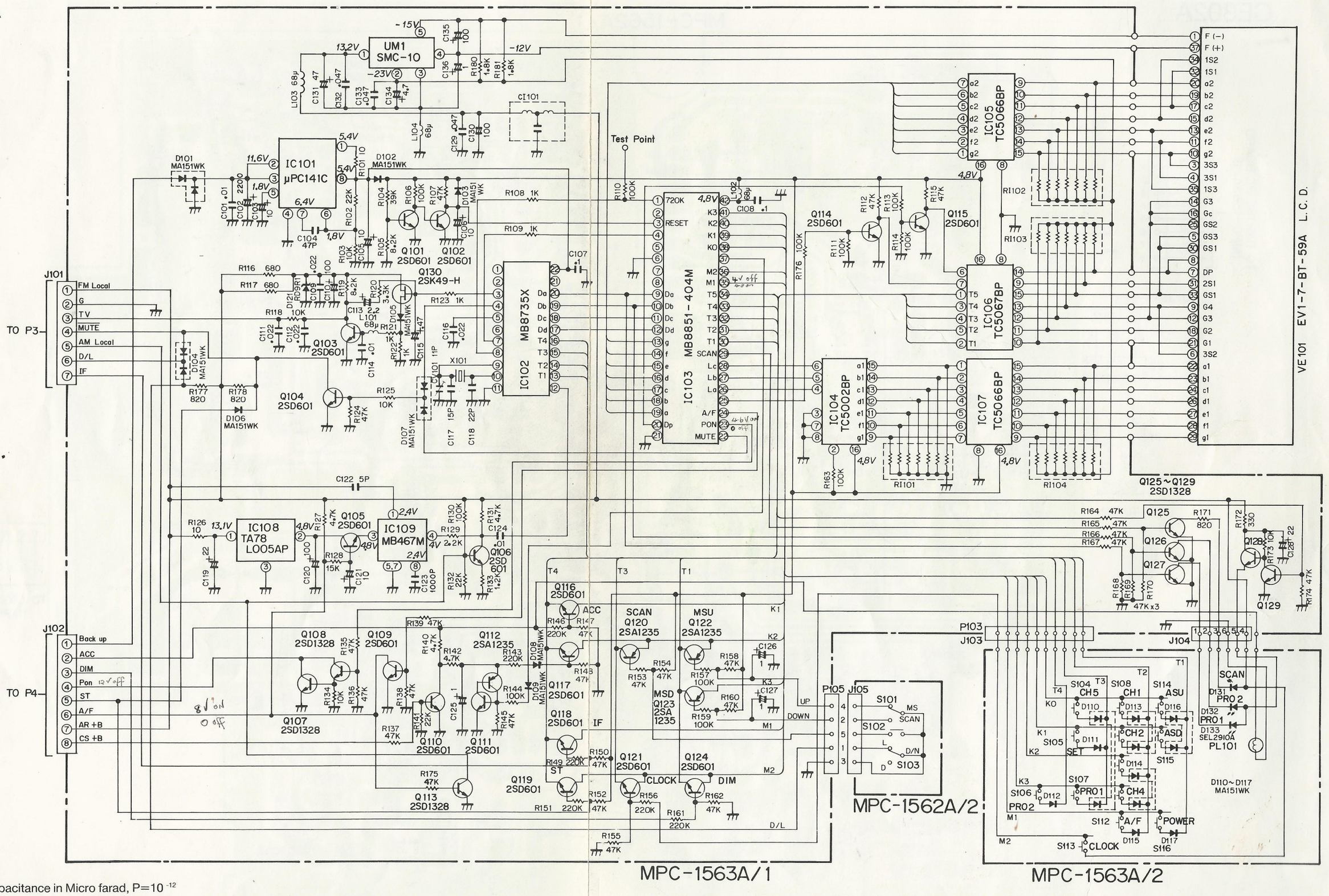

NOTES:
1. All capacitance in Micro farad, $P=10^{-12}$
2. All resistance in ohm, $K=10^{3}$
3. All inductance in henry, $m=10^{-3}$, $\mu=10^{-6}$
4. DC voltage against the chassis measured with 100k ohm/volt meter, power supply set at +13.2 VDC, no signal input.

Fig. 5

DIGITAL PC BOARD

CE302A

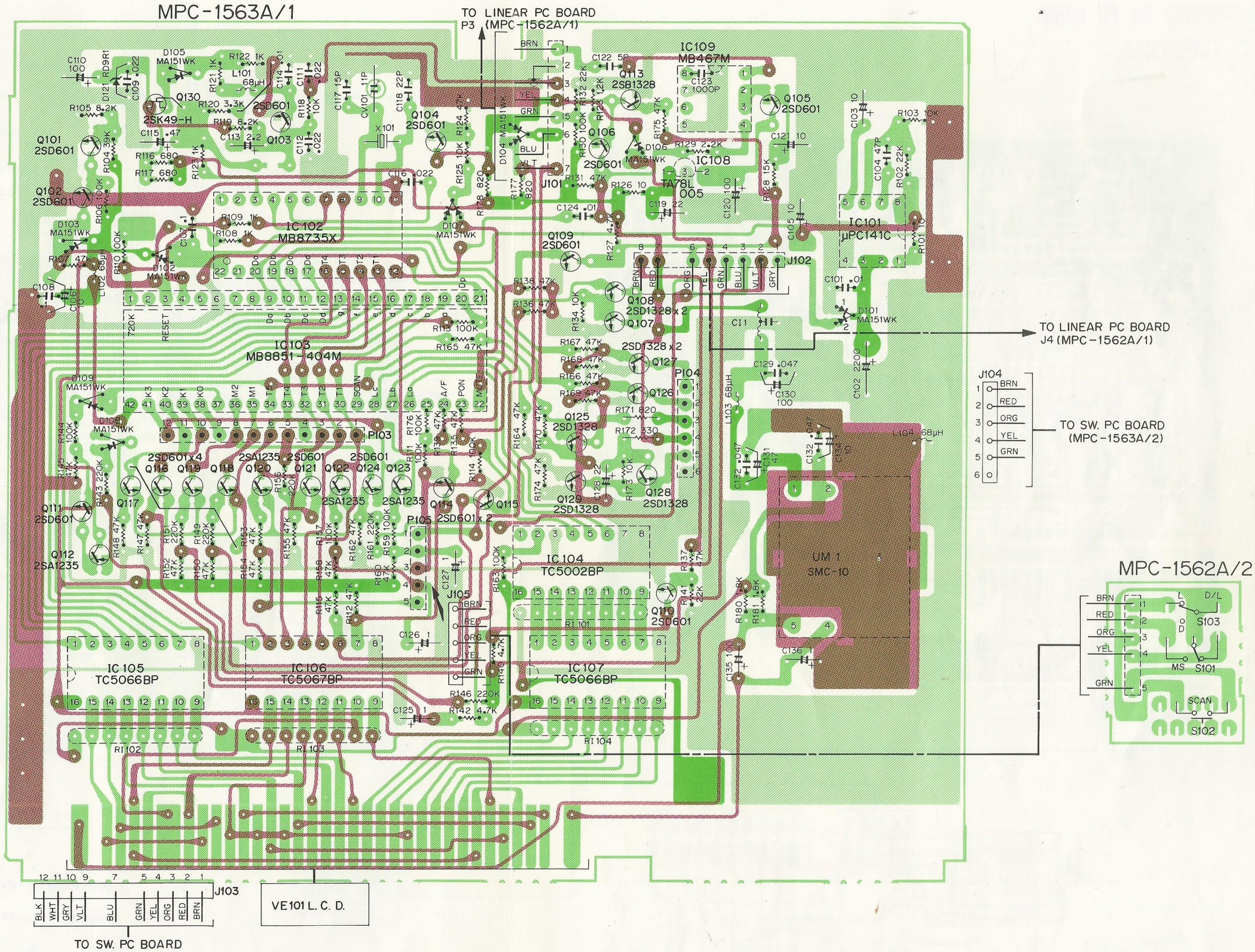

Fig. 6

WIRING ON PC BOARD

CE302A

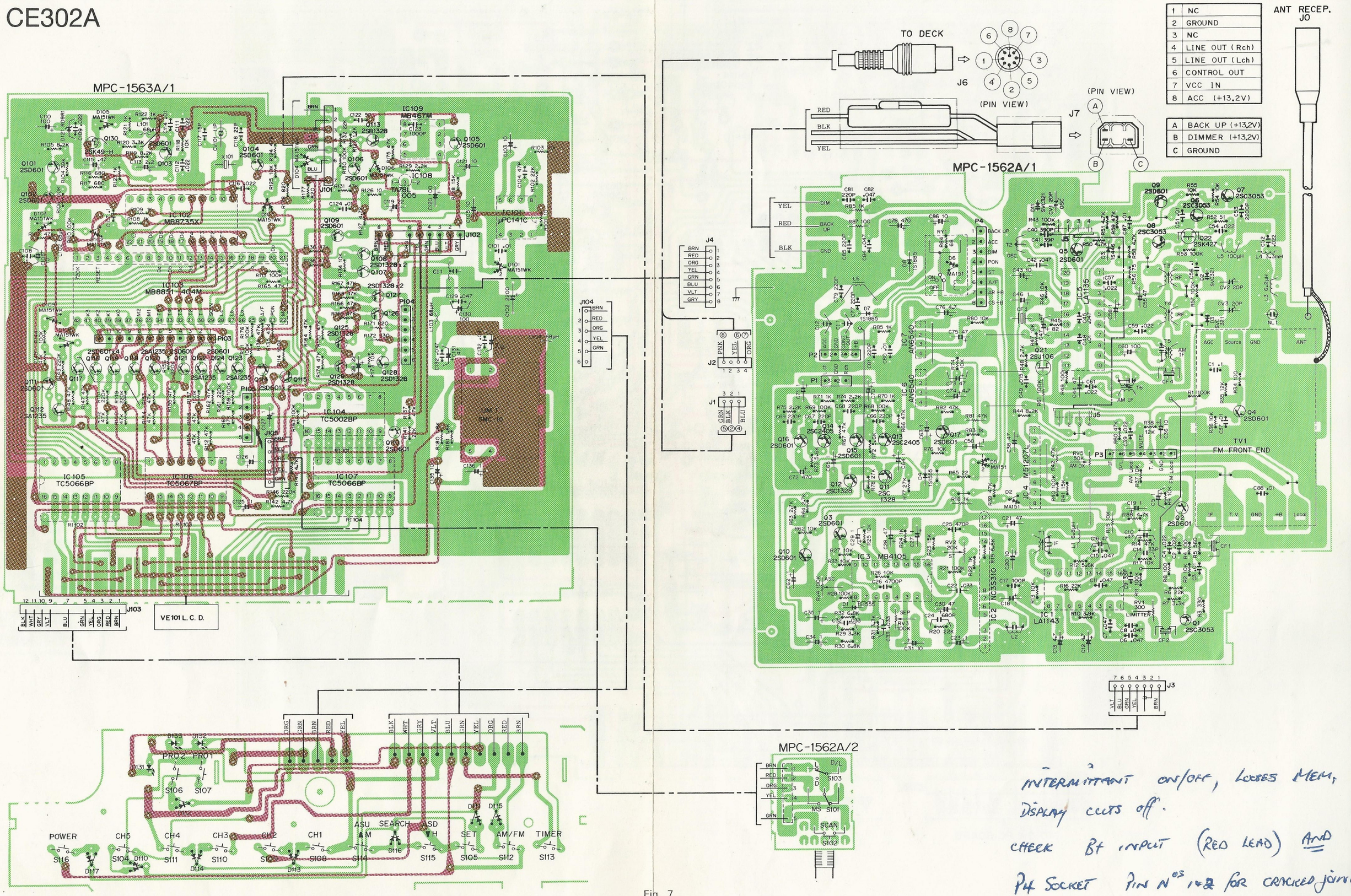

Fig. 7

INTERMITTANT ON/OFF, LOSES MEM, DISPLAY CUTS OFF.
CHECK Bt INPUT (RED LEAD) AND
P4 SOCKET PIN Nos 1&2 FOR CRACKED JOINTS

CE302A

AM ALIGNMENT

Pre-setting of the frequency at each adjustment point will make the tuning for adjustment easier.
AM Frequnecy to be pre-set : 530 kHz, 600 kHz, 1400 kHz, 1000 kHz, 1620 kHz
FM Frequency to be pre-set : 88.1 MHz, 98.1 MHz, 107.9 MHz
Standard adjustment condition

a. Power supply·····13.2V
b. AM/FM Changing switch·····AM
c. Loudness switch·····off
d. Sensitivity switch·····Distant
e. Balance·····Center
f. Tone·····High
g. Volume·····Adjust to get 1.4V output level.
h. Connections

〔1〕 IF Alignment

(1) Connections

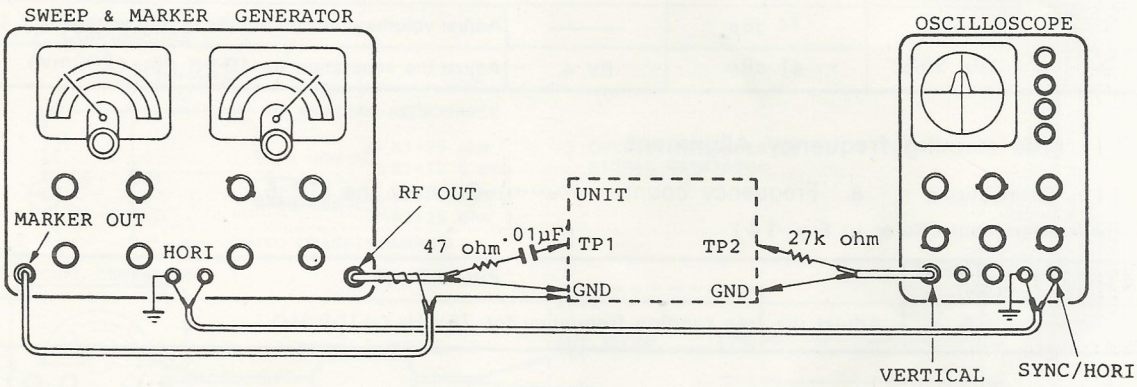

Fig. 8

SWEEP GENERATOR OUTPUT	OSCILLOSCOPE VERTICAL INPUT	OSCILLOSCOPE HORIZONTAL INPUT
Antenna receptacle (JO) TP 1	Connect TP 2 in Fig. 14 through 27k-ohm resistor	Connect with HORIZONTAL terminal of sweep generator

(2) Alignment (Refer to Fig. 14)

STEP	SWEEP GENERATOR MARKER	SWEEP GENERATOR OUTPUT LEVEL	ADJUSTMENT POINTS	PROCEDURE
1	450 kHz	Minimum	T 5	Get maximum IF curve and best symmetry on both sides.
2			T 6	
3	Repeat STEP 1 to 2 until no further gain in output can be obtained.			

〔2〕 Tuning bias and tracking alignment

(1) Connections

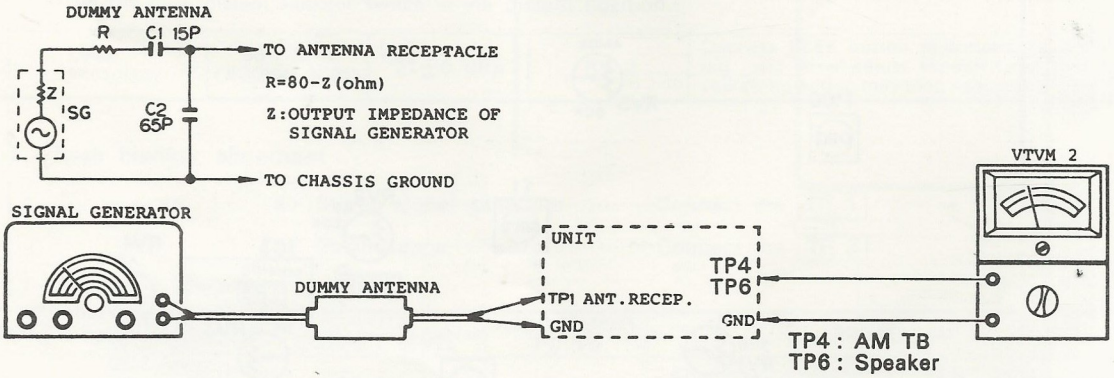

Fig. 9

(2) Alignment (Refer to Fig. 14)

STEP	PURPOSE	SIGNAL GENERATOR FREQUENCY	FREQ. DISPLAY OF UNIT	ADJUSTMENT POINTS	PROCEDURE
1	Tuning bias range	————	1602 kHz	CV 1 (OSC)	Adjust AM tuning bias for 8±0.2V
2		————	522 kHz	T 2 (OSC)	Adjust AM tuning bias for 1.3±0.2V
3	Repeat Steps 1 and 2 for alignment to stably obtain 1.3±0.2V at 522 kHz and 8±0.2V at 1602 kHz as bias.				
4	Tracking	603 kHz (400 Hz, 30%, AM)	603 kHz	T 3, T 4 (ANT, RF)	Adjust output voltage (TP6) for maximum.
5		1404 kHz (400 Hz, 30%, AM)	1404 kHz	CV2, CV3 (ANT, RF)	
6	Repeat steps 4 and 6.				

〔3〕 SEARCH Alignment

(1) Connections Refer to Fig. 9 Signal generator·····connect the TP 1

(2) Alignment (Refer to Fig. 14) VTVM2 ·····No used

STEP	PURPOSE	SIGNAL GENERATOR FREQUENCY	SIGNAL GENERATOR OUTPUT LEVEL	ADJUSTMENT POINTS	PROCEDURE
1	Set the local/distant selector switch in the distant position.				
2	Distant sensitivity	1000 kHz (400Hz, 30% AM)	30 dBμ (±6 dBμ)	RV 5	Depress SEEK button to start searching, and then adjust sensitivity so that the search tuning may stop right near 1000 kHz.

FM ALIGNMENT

* Standard Adjustment Condition

FM adjustment should be the same as in AM standard adjusting condition. (AM/FM selector switch is, however, in FM position.)

NOTE: Since the electronic tuner unit is employed at FM front end section, no tracking and receiving frequency range adjustment are required.

〔1〕 IF Alignment

(1) Connections

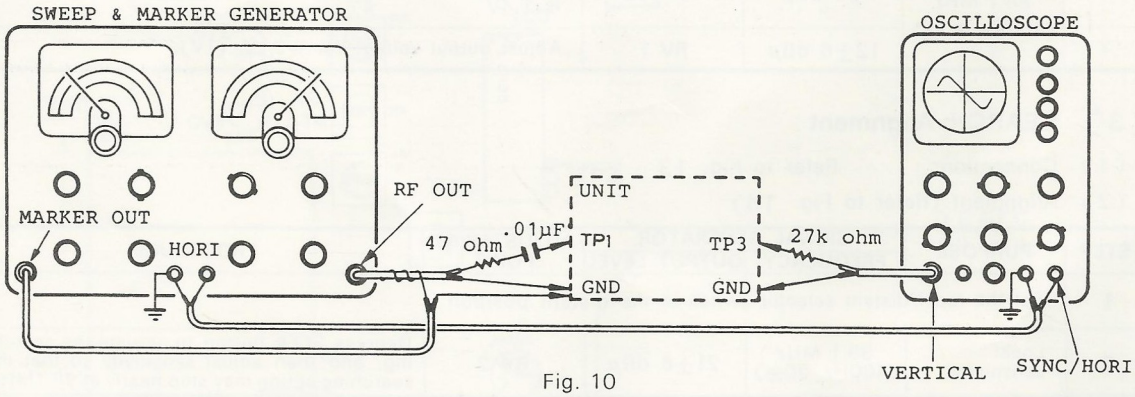

Fig. 10

SWEEP GENERATOR OUTPUT	OSCILLOSCOPE VERTICAL INPUT	OSCILLOSCOPE HORIZONTAL INPUT
Antenna receptacle (J0) TP 1	Connect TP 3 in Fig. 14 through 27K-ohm resistor	Connect with HORIZONTAL terminal of sweep generator

(2) Alignment (Refer to Fig. 14)

STEP	PURPOSE	SWEEP GENERATOR FREQUENCY	ADJUSTMENT POINTS	PROCEDURE
1	S curve	10.7 MHz	T 100	Adjust for full gain and length of s-curve at linears. (See Fig. 12)
2	S curve (Center)	SG 10.7 MHz (400 Hz, 30%)	T 1	Fine-adjust the potential difference between IC 1 ⑦ and ⑬ pins for 0V.

CE302A

COLOR	CENTER FREQUENCY
Red	10.70 MHz ± 30 kHz

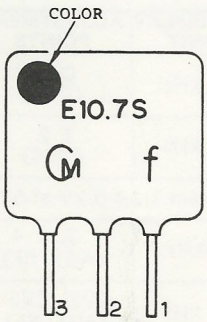

Fig. 11

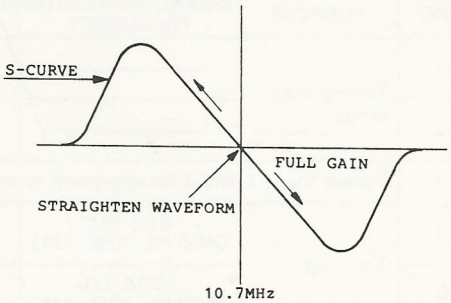

Fig. 12

NOTE: S curve center can be adjusted in the same manner by receiving local FM broadcast near 98.1 MHz.

〔2〕 Limiting sensitivity alignment

(1) Connections

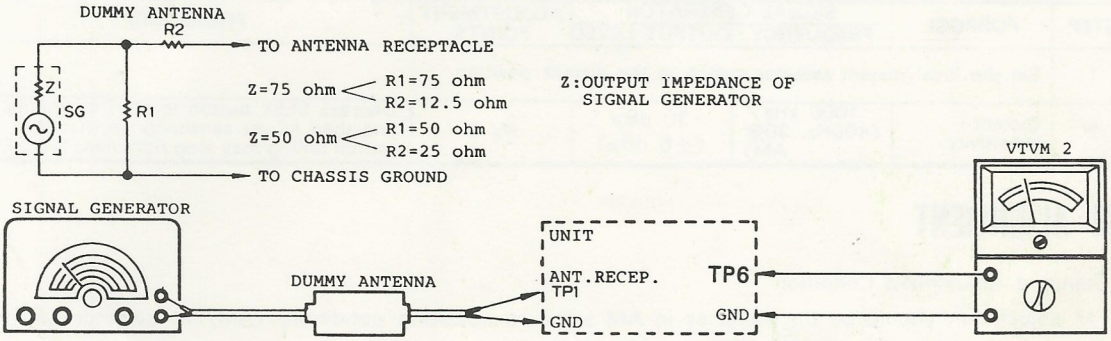

Fig. 13

TP6 : Speaker terminal

(2) Alignment (Refer to Fig. 14)

STEP	SIGNAL GENERATOR FREQUENCY	SIGNAL GENERATOR OUTPUT LEVEL	ADJUSTMENT POINT	PROCEDURE
1	98.1 MHz (400Hz, 30%)	60 dBμ	———	Adjust volume control (VOL) until TP 6 output voltage is 1.4V.
2		12±6 dBμ	RV 1	Adjust output voltage for −3 dB (1V).

〔3〕 SEARCH Alignment

(1) Connections Refer to Fig. 13

(2) Alignment (Refer to Fig. 14)

STEP	PURPOSE	SIGNAL GENERATOR FREQUENCY	SIGNAL GENERATOR OUTPUT LEVEL	ADJUSTMENT POINT	PROCEDURE
1	Set the local/distant selector switch in the distant position.				
2	Local sensitivity	98.1 MHz (400Hz, 30%)	21±6 dBμ	RV 2	Depress SEEK button to actuate the searching, and then adjust sensitivity so that the searching action may stop nearly at 98.1MHz.

〔4〕 Noise blanker alignment

(1) Connections a. Stereo signal generator·····Connect the TP 1

b. Oscilloscope ·····Connect the TP 3

(2) Alignment (Refer to Fig. 14)

STEP	STEREO SIGNAL GENERATOR FREQUENCY	STEREO SIGNAL GENERATOR OUTPUT LEVEL	ADJUSTMENT POINT	PROCEDURE
1	98.1 MHz (No modulation, Stereo mode)	60 dBμ	L 2	After making sure of "STEREO" display, adjust the pilot signal wave (19 kHz) for minimum.

[5] Separation alignment

(1) Connections a. Stereo signal generator·····Connect the TP 1

b. Oscilloscope ·····Connect the TP 6 (L-ch)

(2) Alignment (Refer to Fig. 14)

STEP	STEREO SIGNAL GENERATOR FREQUENCY	STEREO SIGNAL GENERATOR OUTPUT LEVEL	ADJUSTMENT POINT	PROCEDURE
1	98.1 MHz (R-ch : 1 kHz, 30% L-ch : no modulation)	60 dBμ	RV 3	Adjust L-ch. output level for minimum.

[6] ASC Working sensitivity adjustment

(1) Connections Same as separation alignment

(2) Alignment (Refer to Fig. 14)

STEP	SIGNAL GENERATOR FREQUENCY	SIGNAL GENERATOR OUTPUT LEVEL	ADJUSTMENT POINT	PROCEDURE
1	98.1 MHz	74 dBμ	———	Adjust volume control until the output voltage is 1.4V.
2	(1 kHz, 30%)	41 dBμ	RV 4	Adjust the separation for 10±8 dBμ (200mV).

[7] Free running frequency Alignment

(1) Connections a. Frequency counter·····Connect the TP 5

(2) Aligement (Refer to Fig. 14)

STEP	ADJUSTMENT POINT	PROCEDURE
1	RV 2	Adjust the free running frequency for 76 kHz (±100 Hz)

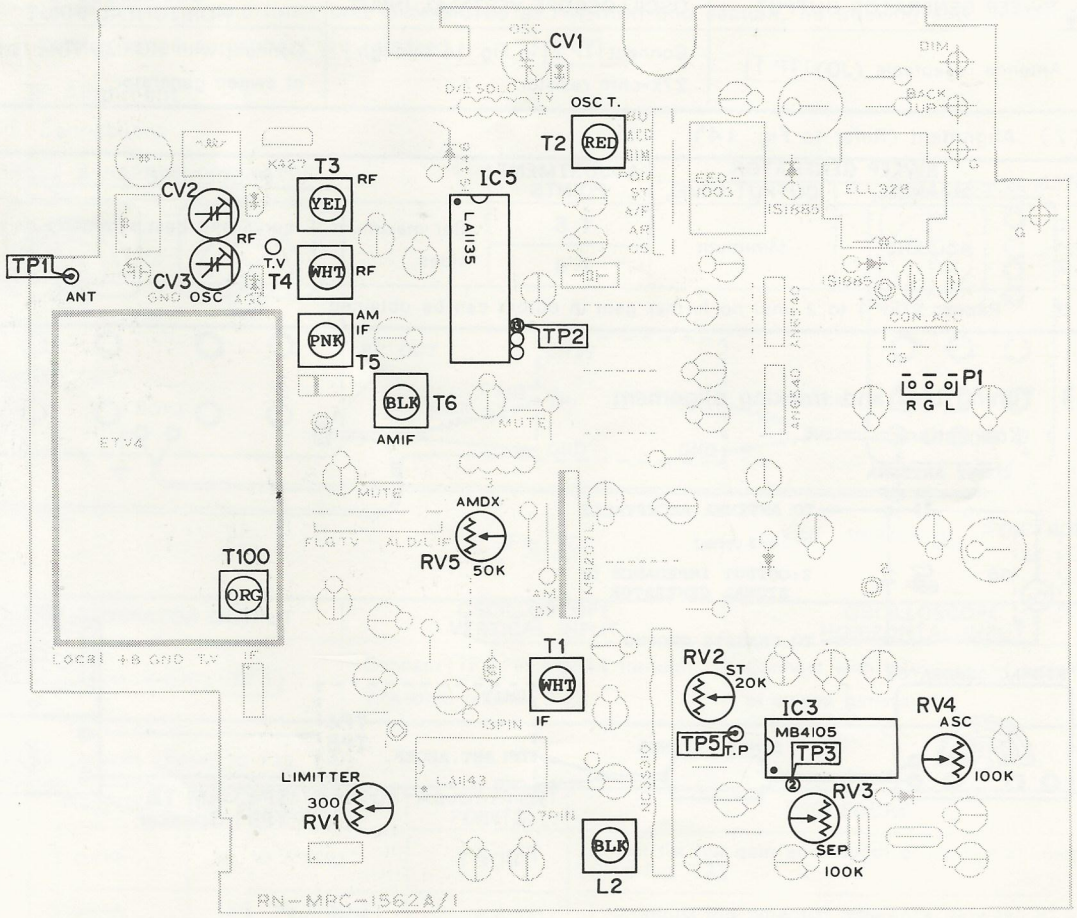

Fig. 14

CE302A
SEMI-CONDUCTOR CONNECTIONS & FUNCTIONAL DIAGRAMS

◦ Diodes, FET (SVC321, 2SK427, 2SK49-H, 2SK195-H)

SVC321

RANK	1.2V	8.0V
SVC321-C	420.0~459.1PF	20.30~23.54PF
SVC321-D	420.0~459.1PF	23.31~27.05PF

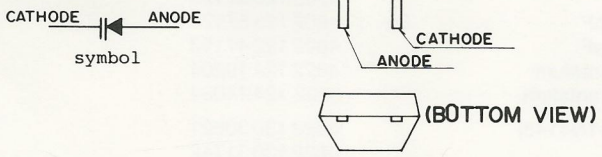

Fig 15-1

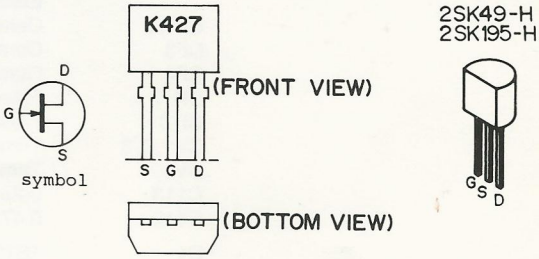

Fig 15-2

◦ FM IF amp.~Q.DET. (LA1143)

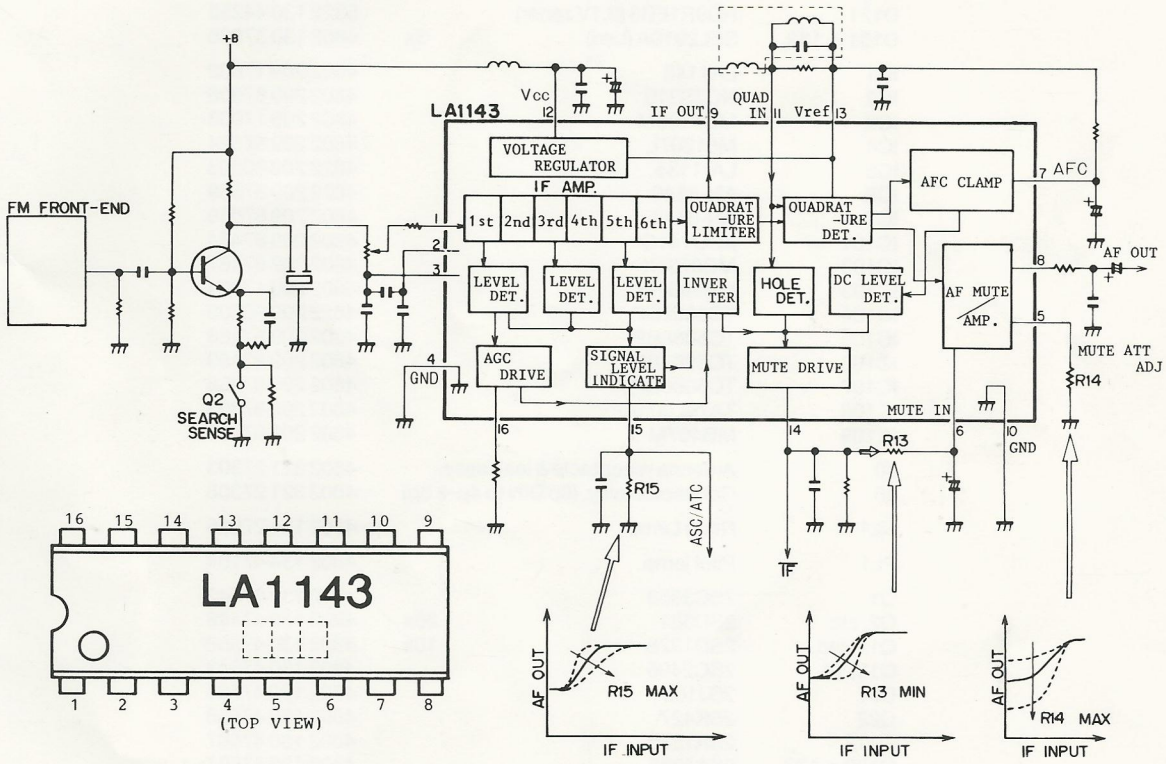

Fig 16

◦ MPX. Decoder (MB4105M)

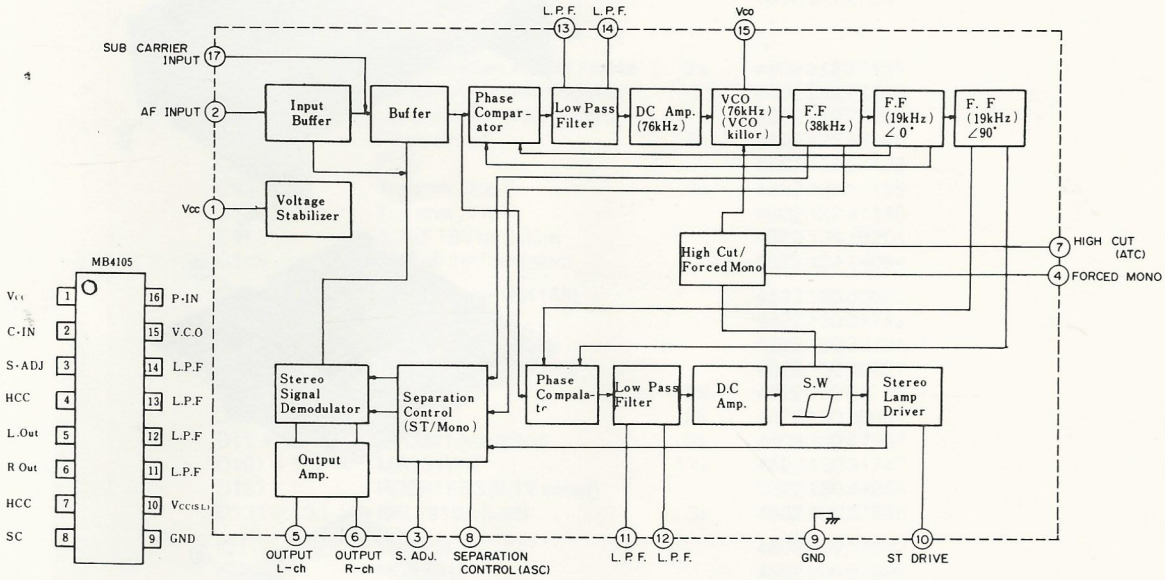

Fig 17

◦ AM Tuner (LA1135)

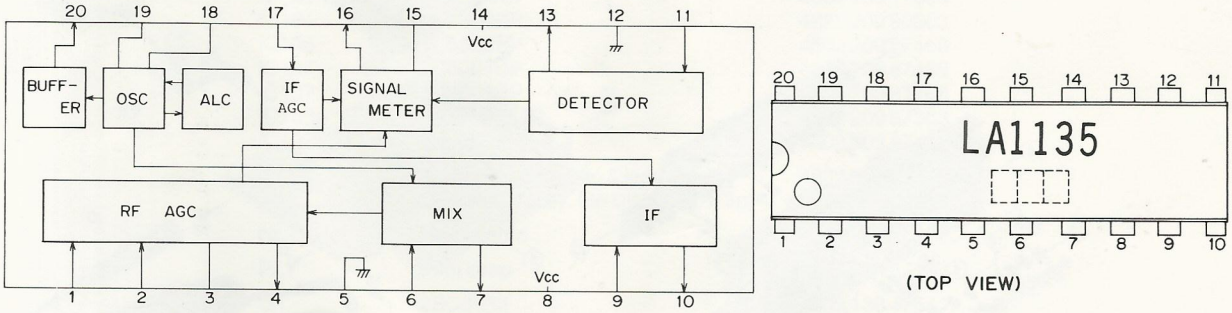

Fig 18

EXPLODED VIEW
CE302A

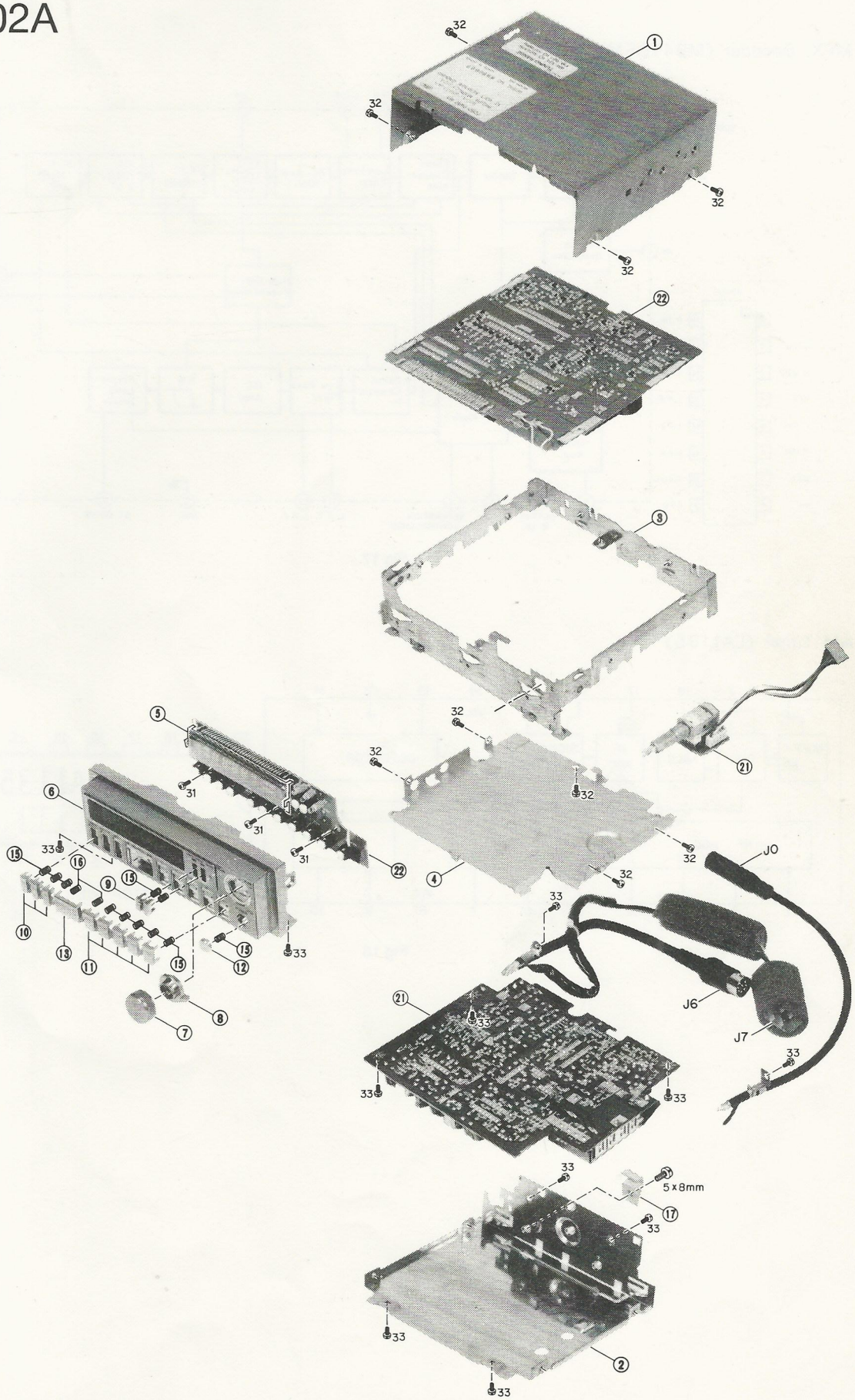

Fig 19

TUNER CE302A PARTS LIST

	Mechanical (see exploded view)		
6	Escutcheon (incl. Holder and filter)		4802 423 57101
7	Knob, Tune		4802 413 37302
8	Knob, DX/Local		4802 411 27251
9	Button, Programme (2x)		4802 411 27246
10	Button, Timer, AM/FM, Set (3x)		4802 411 27248
11	Button, Preset (5x)		4802 411 27245
12	Button, Power		4802 411 27244
13	Button, Search		4802 411 27247
	Electrical		
CF1, 2	Ceramic filter, FM 10.7 MHz	2x	4802 242 77155
CF3	Ceramic filter, AM 450kHz		4802 242 77156
CF4	Ceramic filter, AM 450kHz		4802 242 77093
CI1, 2	Filter, 270pF	2x	4802 125 57126
CI101	Filter		4802 125 57128
CV1, 2, 3	Trimmer, 20pF	3x	4802 125 57125
CV101	Trimmer, 11pF		4802 122 47153
C113	2.2μF 16V tantalum		4822 124 10204
C115	0.47μF 16V tantalum		5322 124 14064
D1	1S1555 (use 1N4148)		4822 130 30621
D2	MA151A		4822 130 31742
D3	1S446 (germanium)		4822 130 30191
D4	1S1555 (use 1N4148)		4822 130 30621
D5, 6	MA151WK	2x	4822 130 31742
D7, 8	1S1885	2x	4822 130 30684
D11 ÷ 13	SVC321 (varactor)	3x	4802 130 47564
D101 ÷ 117	MA151WK	17x	4822 130 31742
D121	RD9R1EB3 (9.1V zener)		5322 130 44255
D131 ÷ 133	SEL2910A (Led)	3x	4802 130 37586
IC1	LA1143		4802 209 17002
IC2	NC3S310		4802 209 87906
IC3	MB4105M		4802 209 17003
IC4	M51207L		4802 209 87524
IC5	LA-1135		4822 209 80503
IC6	AN-6540		4822 209 87559
IC7	AN-6540		4802 209 87559
IC101	μPC141C		4802 209 87464
IC102	MB8735X		4802 209 87467
IC103	MB8851M		4802 209 17004
IC104	TC5002BP		4822 209 80503
IC105	TC5066BP		4802 209 87468
IC106	TC5067BP		4802 209 87469
IC107	TC5066BP		4802 209 87468
IC108	TA78L005AP		4802 209 87303
IC109	MB467M		4802 209 87483
J0	Antenna receptacle & lead assy.		4802 321 27303
J6	Connector assy. (8p DIN to 4p + 3p)		4802 321 27308
NL1	Neon Lamp		4802 134 27026
PL1	Pilot lamp		4802 134 47184
Q1	2SC3053		4802 130 47542
Q2, etc.	2SD601	26x	4802 130 47448
Q11, etc.	2SD1328	10x	4802 130 47568
Q13, 14	2SC2405		4802 130 47543
Q21	2SJ106		4802 130 47565
Q22	2SK427		4802 130 47566
Q112	2SA1235		4802 130 47567
Q120 ÷ 123	2SA1235		4802 130 47567
Q130	2SK49-H		4802 130 47443
RI101	100kΩ x 7, assembly		4802 111 97014
RV1	300Ω preset		4802 100 17203
RV2	20kΩ preset		4802 100 17097
RV3	100kΩ preset		4802 100 17095
RV4	100kΩ preset		4802 100 17095
RV5	50kΩ preset		4802 100 17096
RY1	D.C. relay		4802 280 87012
S101	Switch, MS		4802 276 17237
S102	Switch, SCAN		4802 276 17237
S103	Switch, D/L		4802 276 17237
S104 ÷ 116	Push switch	13x	4802 276 17239
TV1	FM Front End assembly		4802 210 17135
T2	I.F. transformer		4802 156 57004
T3	B.C. transformer		4802 156 37149
T4	B.C. transformer		4802 156 37151
T5	I.F. transformer A.M.		4802 156 57002
T6	I.F. transformer A.M.		4802 156 57003
UM1	Converter unit		4802 210 17134
VE101	7-BT-59A (liquid crystal display)		4802 130 97028
X101	Crystal 5.76MHz		4802 242 77157

CE302A

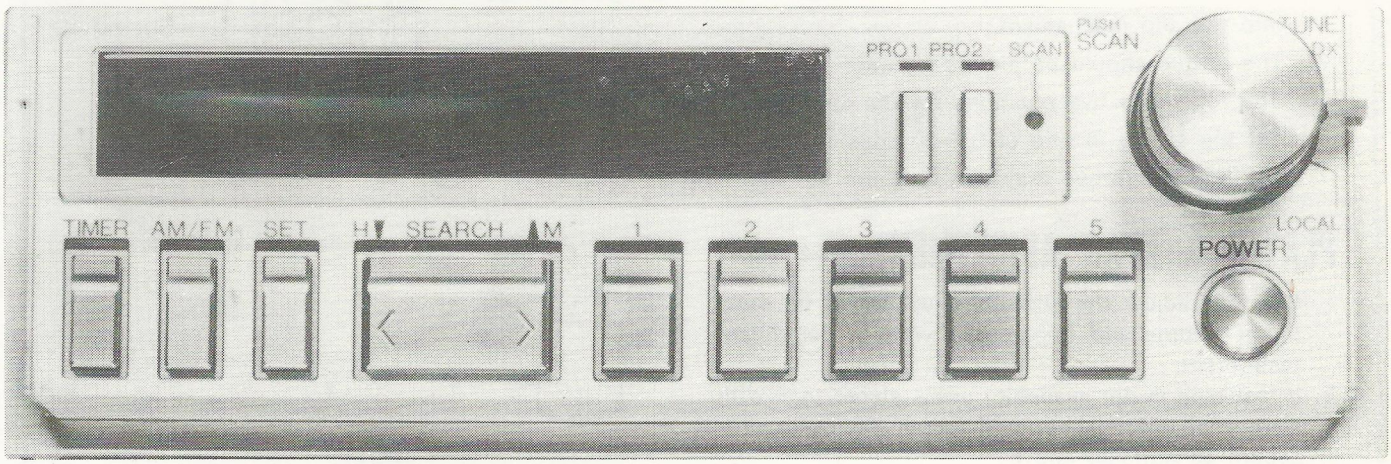

TA113A

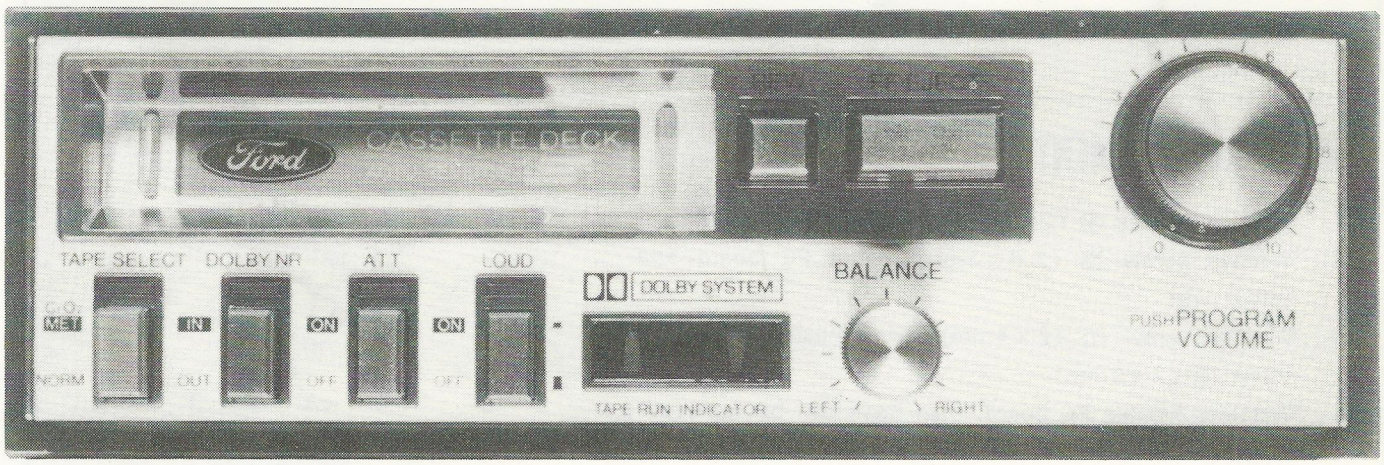

TA113A

ADJUSTMENT FOR TAKE-UP TORQUE

1. Measure the take-up torque by inserting the torque gauge cartridge into the slip mechanism.
2. The torque should be always between **40** and **55** g-cm.
   The roller has five positions for the spring to be set.
3. Set the spring in one of ①—⑤ positions for the sufficient value.
   The take-up torque may vary 5 g-cm per one step of the roller.

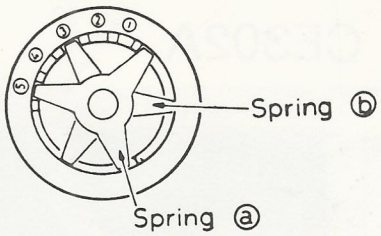

Fig 20

PLAYBACK HEAD ADJUSTMENT (Azimuth)

1. Carefully adjust the azimuth adjust screw for maximum volume and treble tone without using test instrument.
2. If test tape is not available, use a stereo tape with some high treble tones and follow the same procedure as outlined above.

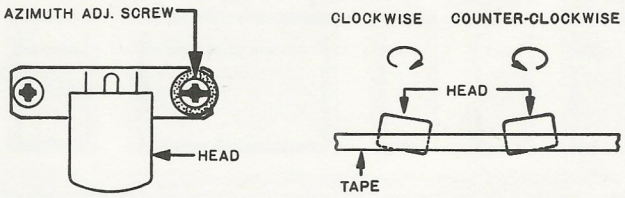

Fig 21

BELT REPLACEMENT

1. Remove two screws (2×4mm) fixing PC board in lower part of deck.
2. Remove two flat screws [1] (2.6×3mm) and cover, then belt [A] can be replaced.
3. Remove E ring [2] and spring [3] than belt [B] can be replaced.

MOTOR REPLACEMENT

Remove two screws [4] (2.6×3mm) and belt, then motor can be replaced.

SLIP MECHANISM REPLACEMENT

Remove E ring, washer [5] and belt, then slip mechanism can be replaced.

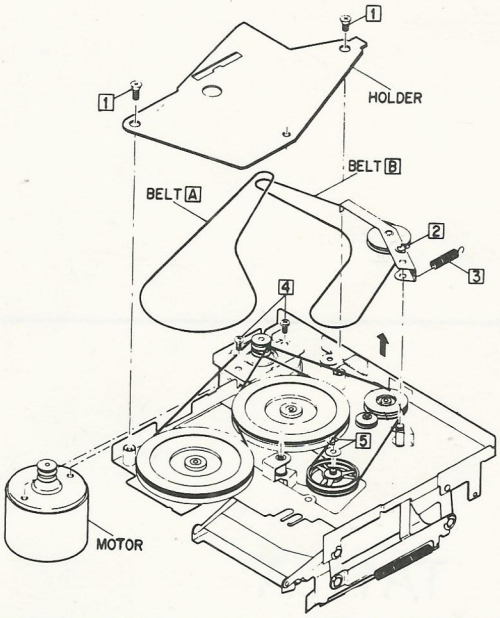

Fig 22

HEAD REPLACEMENT

1. Remove screws [5] (2.6×2mm) and [6] (2.6×3mm).
2. Remove screw [9] (2.6×3mm) fixing PC board and holder unit.
3. Remove screw [7] (2×4mm) fixing head and special screw [8] (2×6mm).
   Unsolder flexible PC board, then head can be replaced.

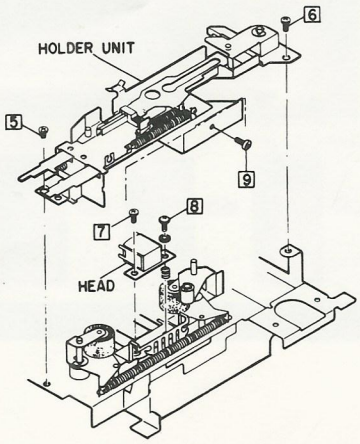

Fig 23

SCHEMATIC
TA113A

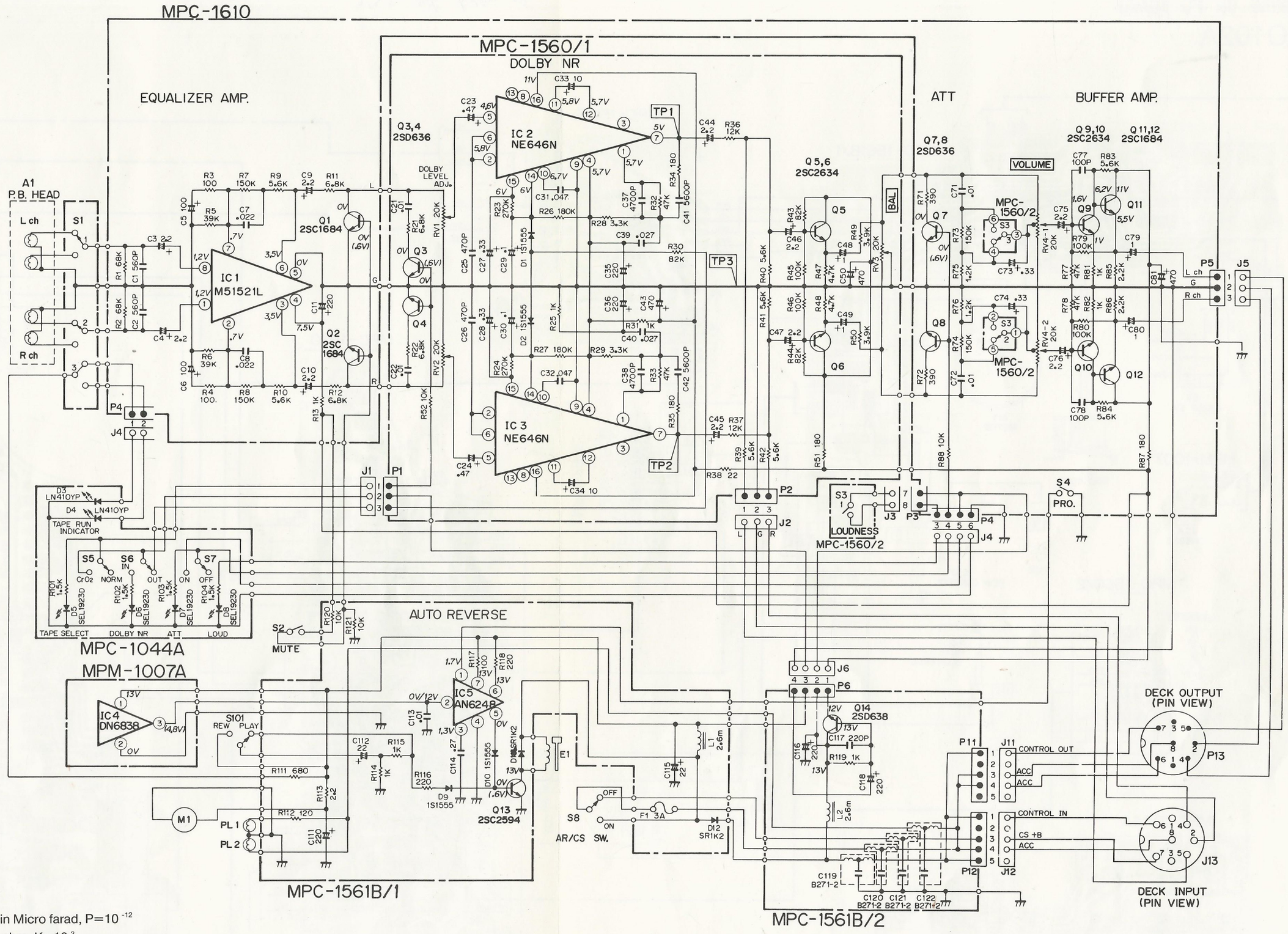

NOTES:
1. All capacitance in Micro farad, $P=10^{-12}$
2. All resistance in ohm, $K=10^{3}$
3. All inductance in henry, $m=10^{-3}$, $\mu=10^{-6}$
4. DC voltage against the chassis measured with 100k ohm/volt meter, power supply set at +13.2 VDC, no signal input.

Fig 24

* NO AUDIO - RADIO / TAPE.
CHECK Q14 for d/c.
B+ Supply for Q5, 6

WIRING ON PC BOARD
EQ102A

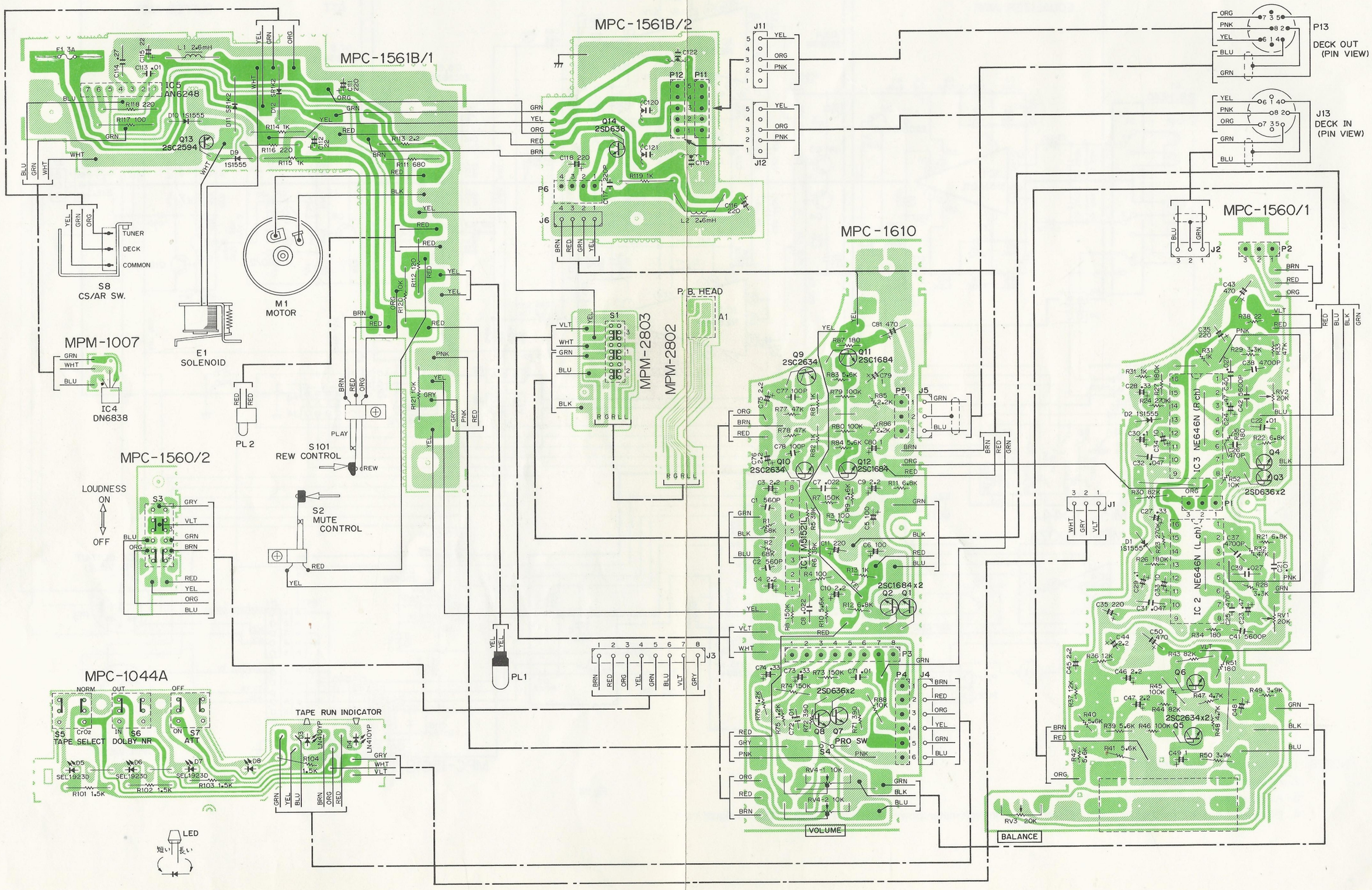

Fig 25

EXPLODED VIEW
TA113A

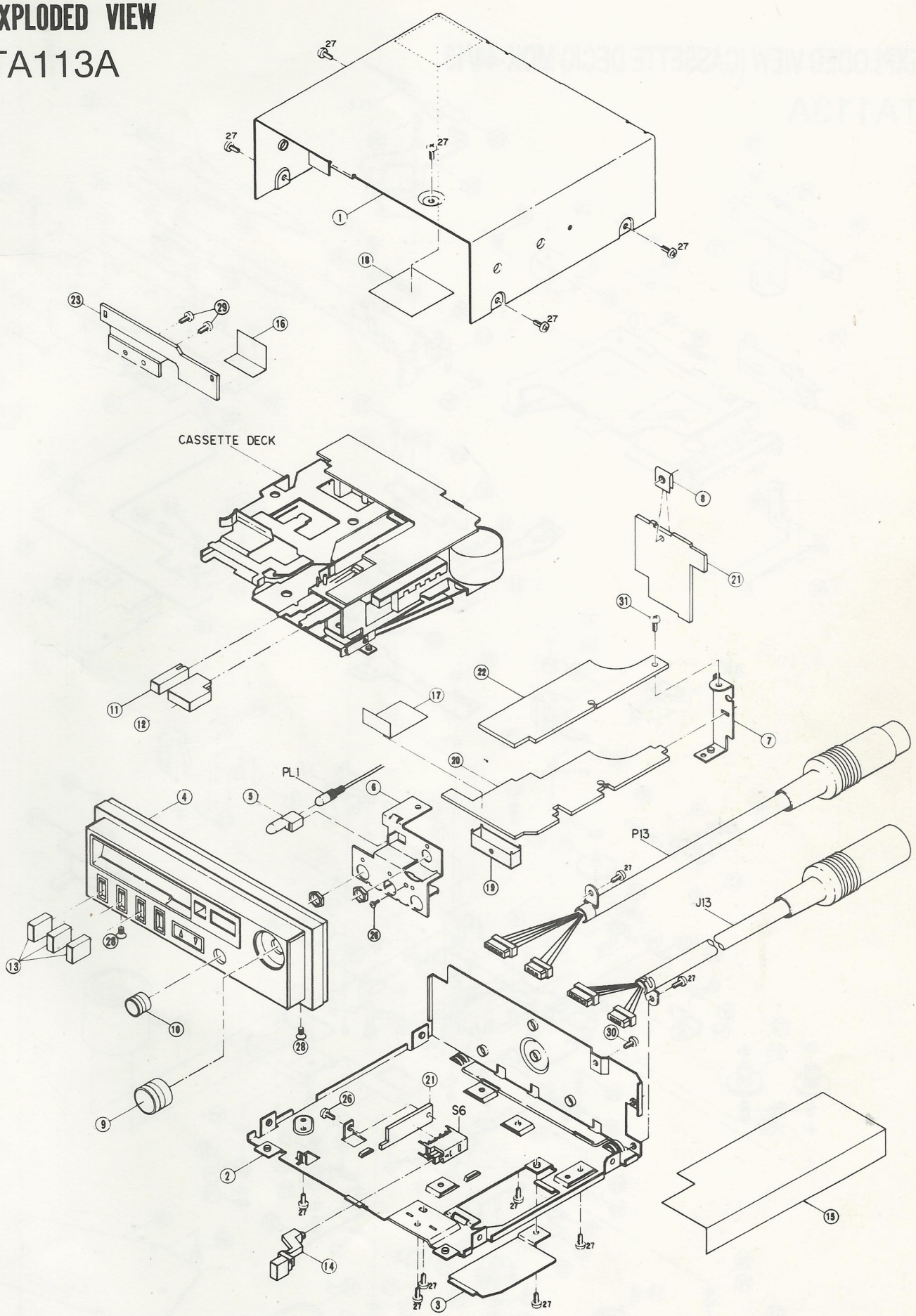

Fig 26

EXPLODED VIEW (CASSETTE DECK) MDK-44/13

TA113A

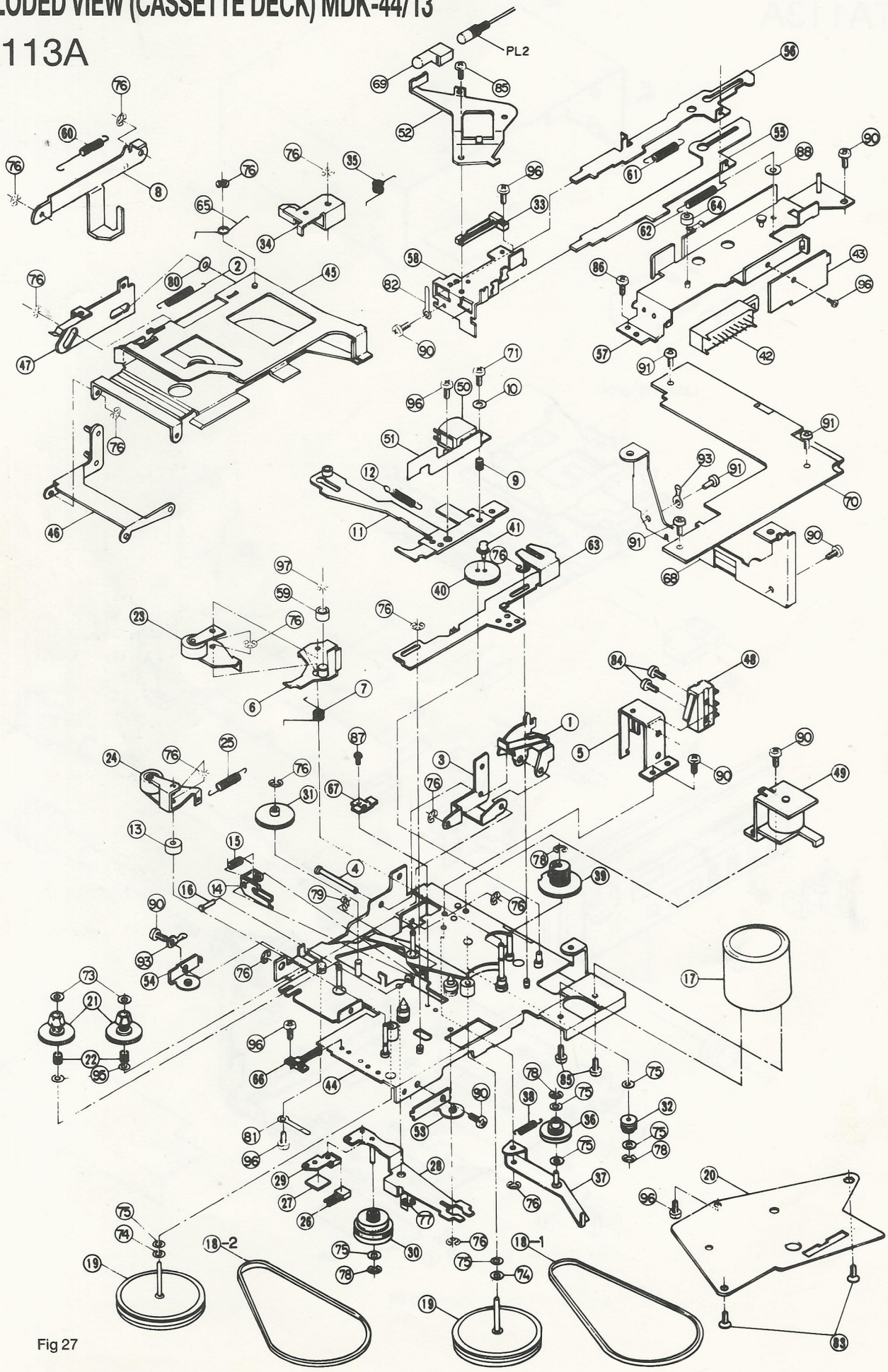

Fig 27

EQ102A

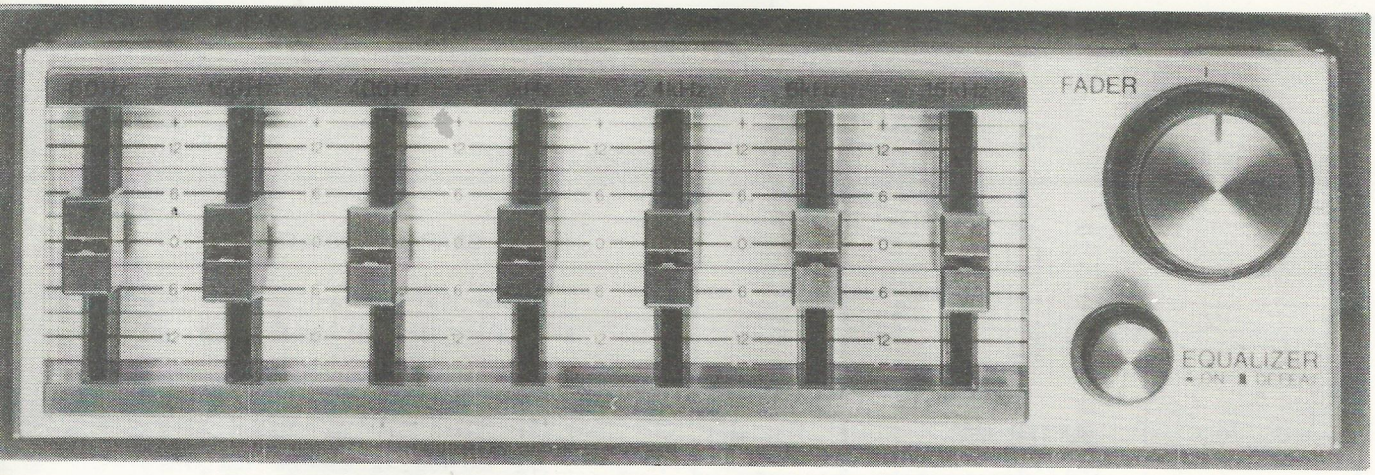

* NO OUTPUT - AMP OK EQ OK.

check Q14 in deck - B+ supply to DOLBY IC'S

CASSETTE DECK TA113A
PARTS LIST

	Mechanical (see exploded view)		
4	Escutcheon (includes door)		4802 423 57102
9	Knob (Volume)		4802 413 37303
10	Knob (Balance)		4802 411 27252
11	Button (Rewind)		4802 411 27242
12	Button (eject, fast-forward)		4802 411 27239
13	Button (tape sel., Dolby, att.)		4802 411 27243
14	Button (loudness)		4802 411 27241
	Electrical		
C23, 24	0.47μF 16V tantalum		4822 124 10319
C27, 28	0.33μF 16V tantalum		5322 124 14026
C29, 30	0.1μF 16V tantalum		4822 124 10203
C73, 74	0.33μF 16V tantalum		5322 124 14026
D1, 2	1S1555 (use 1N4148)		4822 130 30621
D3, 4	LN410YP		4802 130 37448
D4 ÷ 8	SEL1923D (Led)		4802 130 37584
D9, 10	1S1555 (use 1N4148)		4822 130 30621
D11, 12	SR1K2		4822 130 31127
E1	Solenoid (item 49, Cass. Deck)		4802 282 37009
IC1	M51521L		4822 209 80573
IC2, 3	NE646N		4822 209 81045
IC4	DN6838 (item 26, Cass. Deck)		4822 209 80748
IC5	AN6248		4802 209 87466
J13	Connector assy. (8p DIN to 3p + 5p)		4802 321 27304
P13	Connector assy. (8p DIN to 3p + 5p)		4802 321 27305
M1	Motor (item 17, Cass. Deck)		4802 361 27154
PL1, 2	Lamp	2x	4802 134 47185
Q1, 2	2SC1684		4822 130 41532
Q3, 4	2SD636		4802 130 47437
Q5, 6	2SD2634		4802 130 47434
Q7, 8	2SD636		4802 130 47437
Q9, 10	2SC2634		4802 130 47434
Q11, 12	2SC1684		4822 130 41532
Q13	2SC2594		4802 130 47433
Q14	2SD638		4822 130 41324
RV1, RV2	20kΩ (Dolby level adjust)		4822 100 10086
RV3	20kΩ (balance)		4802 102 27121
RV4	20kΩ x2 (volume) + S4		4802 102 27119
S1	Slide switch, (* item 42)		4802 277 17139
S2	Leaf switch, Mute (* item 66)		4802 277 17029
S3	Push switch, Loudness		4802 276 17241
S4	On RV4		—
S5	Switch, Tape select		4802 277 37057
S6	Switch, Dolby		4802 277 37057
S7	Switch, Att.		4802 277 37057
S8	Micro-switch, Tuner/Deck (* item 48)		4802 271 37041
S101	Leaf switch, Rew./Play (* item 33)		4802 278 97078
	(* - on Cassette mechanism)		
	Cassette Mechanism (see exploded view)		
	Complete Assembly MDK-44/13		4802 691 37116
17	Motor (M1)		4802 361 27154
18-1	Belt		4802 358 37003
18-2	Belt		4802 358 37039
19	Flywheel		4802 528 67103
21	Take-up reel	2x	4802 528 87337
23	Pinch-roller assembly		4802 403 47134
24	Pinch-roller assembly		4802 403 47135
26	I.C. DN6838 (IC4)		4822 209 80748
30	Slip mechanism		4802 402 37006
33	Leaf switch (S101)		4802 278 97078
42	Slide switch (S1)		4802 277 17139
48	Microswitch (S8)		4802 271 37041
49	Solenoid (E1)		4802 282 37009
50	Playback head		4802 249 47071
66	Leaf switch (S2)		4802 277 17029
73	Washer, reel fixing	2x	4802 532 57147

SCHEMATIC
EQ102A

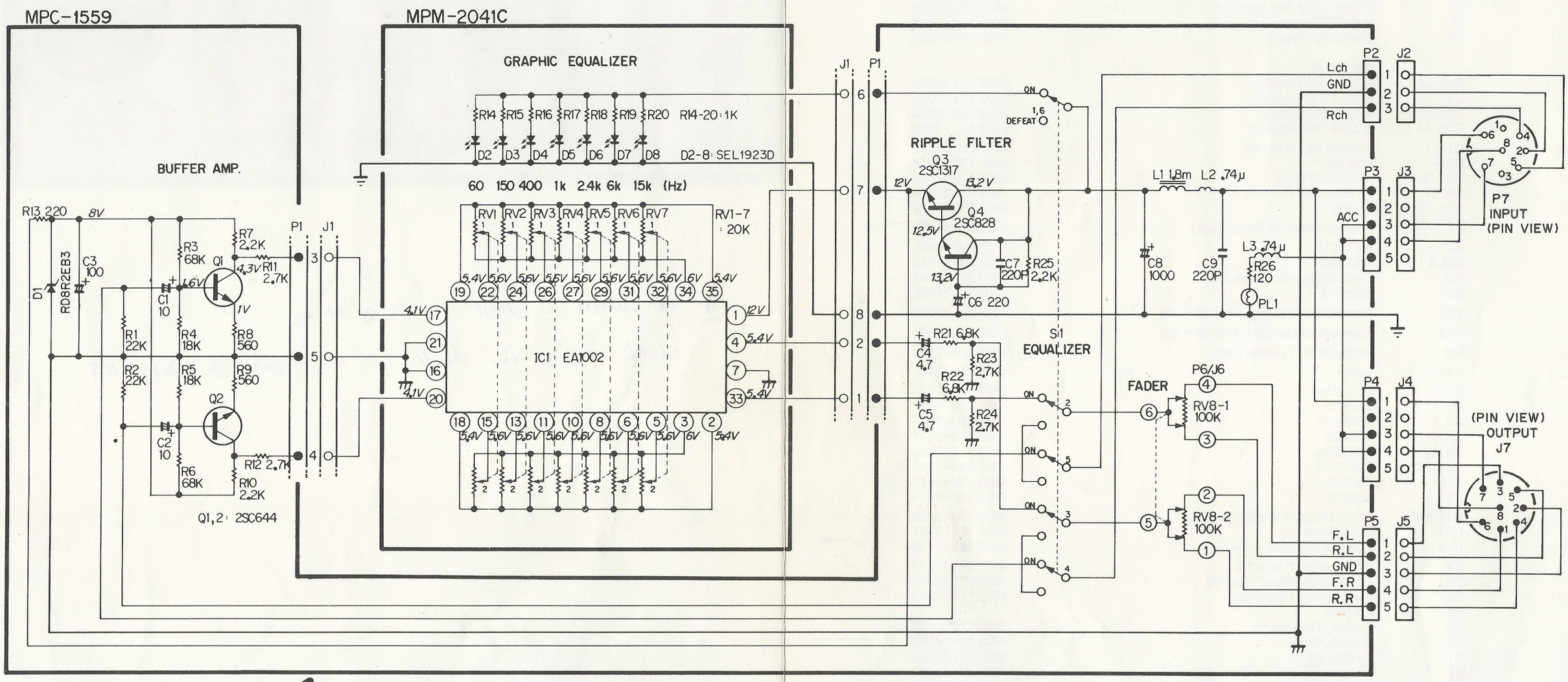

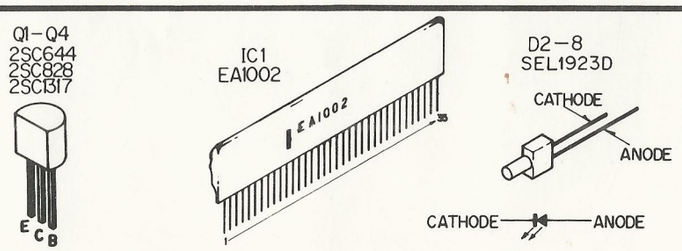

PIN	J7	P7
1	FRONT LINE OUT (Rch)	NC
2	GROUND	GROUND
3	FRONT LINE OUT (Lch)	NC
4	REAR LINE OUT (Rch)	LINE IN (Rch)
5	REAR LINE OUT (Lch)	LINE IN (Lch)
6	CONTROL OUT	CONTROL IN
7	VCC IN	VCC OUT
8	ACC (+13.2V)	ACC (+13.2V)

USING CLARION LEAD + SOCKET. X2.

1 - GREEN F
2 - BLACK F
3 - Yellow
4 - GREEN R
5 - Yellow R
6 - white
8 — Pink Bt input

* IMPORTANT
ON CLARION SOCKET YOU MUST LINK ONE OF THE EARTH PINS TO CASE OR SHIELD (BLACK OR BLUE)

1 - white
2 - Black
3 - GREEN
7 - BROWN
8 - RED
CASE - Yellow

NOTES:
1. All capacitance in Micro farad, $P=10^{-12}$
2. All resistance in ohm, $K=10^{3}$
3. All inductance in henry, $m=10^{-3}$, $\mu=10^{-6}$
4. DC voltage against the chassis measured with 100k ohm/volt meter, power supply set at +13.2 VDC, no signal input.

WIRING ON PC BOARD

EQ102A

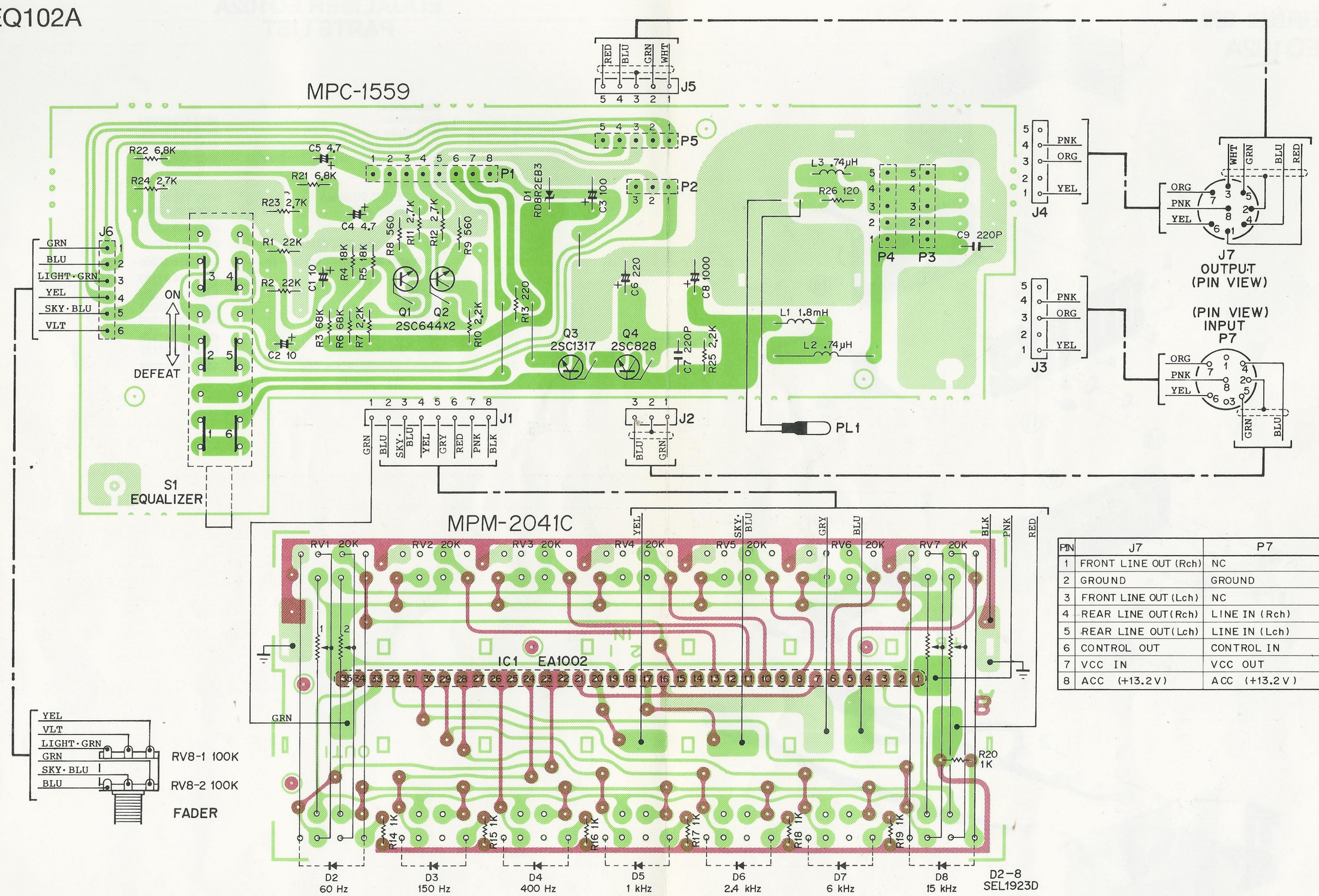

PIN	J7	P7
1	FRONT LINE OUT (Rch)	NC
2	GROUND	GROUND
3	FRONT LINE OUT (Lch)	NC
4	REAR LINE OUT(Rch)	LINE IN (Rch)
5	REAR LINE OUT(Lch)	LINE IN (Lch)
6	CONTROL OUT	CONTROL IN
7	VCC IN	VCC OUT
8	ACC (+13.2V)	ACC (+13.2V)

Fig. 29

EXPLODED VIEW
EQ102A

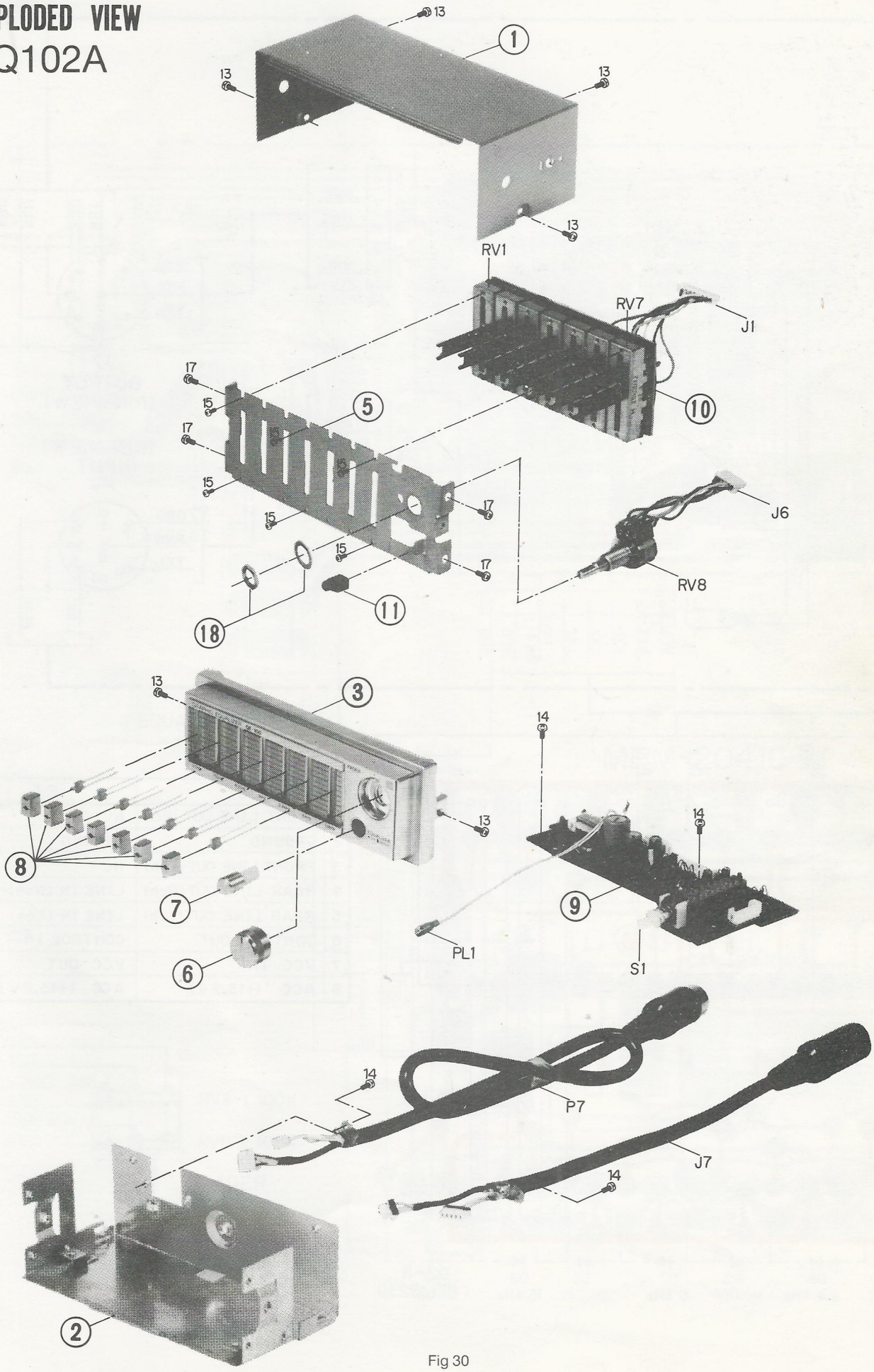

Fig 30

EQUALISER EQ102A
PARTS LIST

	Mechanical		
3	Escutcheon		4802 423 57099
6	Knob (fader control)		4802 413 37303
7	Button (for push switch)		4802 411 27237
8	Button (for slider controls)	7x	4802 411 27238
	Electrical		
D1	RD8R2EB3 (8.2V zener)		5322 130 34119
D2 ÷ D8	SEL 1923D (Led)	7x	4802 130 37584
IC1	EA1002		4802 209 17001
J7	Connector assy. (8p DIN to 5p + 5p)		4802 321 27307
P7	Connector assy. (8p DIN to 30 + 5p)		4802 321 27306
PL1	Lamp		4802 134 47183
Q1, Q2	2SC644		4802 130 47323
Q3	2SC1317		4822 130 40932
Q4	2SC828		4822 130 41019
RV1-7	Assy. 20kΩ x7		4802 102 37178
RV8	Assy. 100kΩ x2 (Fader)		4802 102 37177
S1	Push-switch (5p. 2 pos. c/o)		4802 276 17238

CR511A

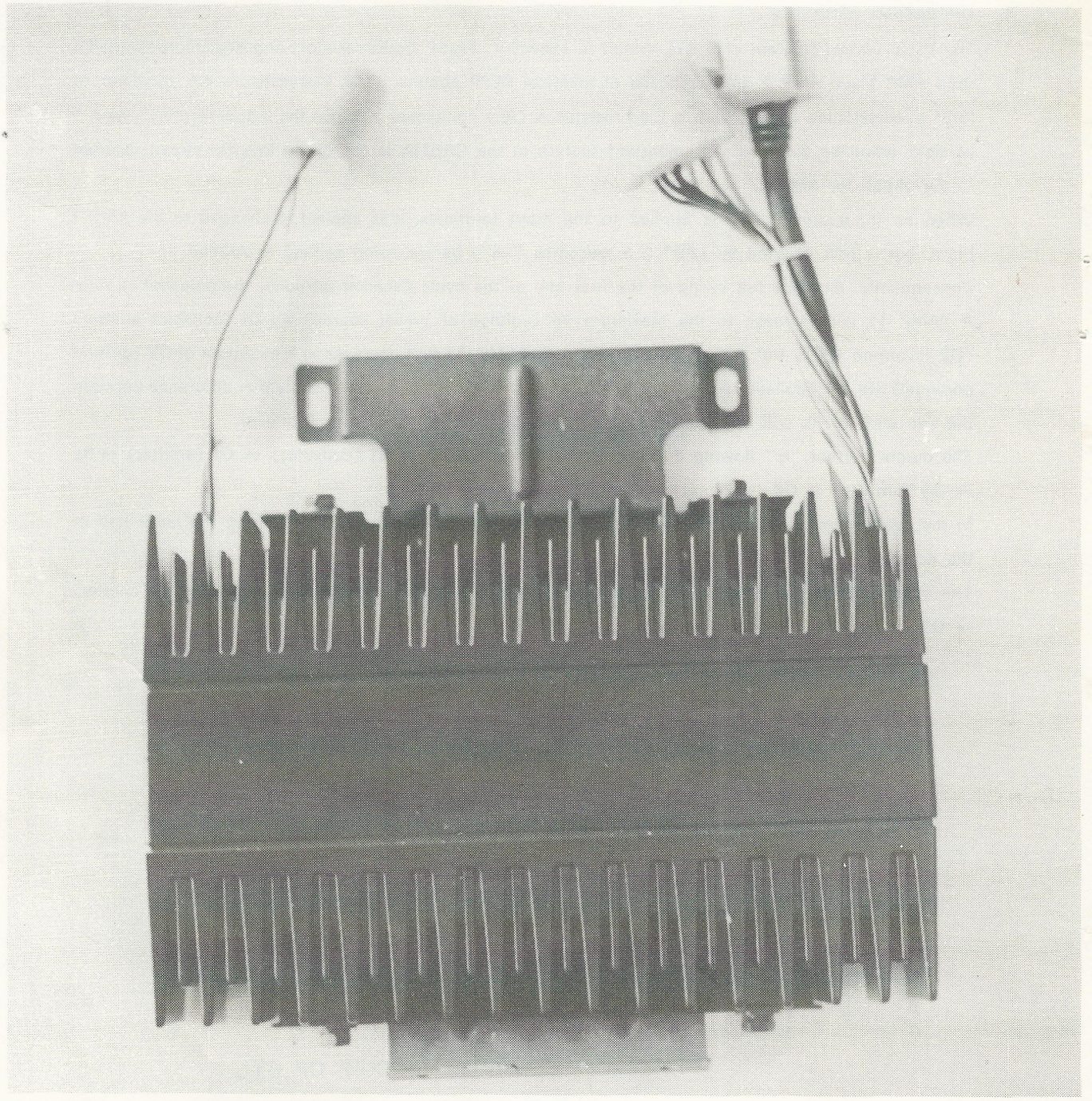

THE BTL CIRCUIT SYSTEM

1. OPERATING PRINCIPLE

The basic circuit diagram of a **BTL** circuit is shown in Fig 31 (with resistors and capacitors omitted). Both **AMP 1** and **AMP 2** are composed of identical **SEPP** circuits. The 4 transistors are arranged to form a Wheatstone bridge, with a load resistance (RL) connected between the output terminals (A-A') of both amplifier circuits. An important feature in the **CR511A** is the phase inverter circuit inserted in the circuit for **AMP 2**.

When an input signal "ei" is applied to the input terminals, it is applied unchanged to the **AMP 1** input, but is first inverted by 180° (i.e. becomes "-ei") before being applied to **AMP 2**.

Consequently, during a full swing of the first half of the cycle (shaded portion), the potential at point A (AMP 1) will increase to the maximum Vc (voltage of power source) via Q1 (collector–emitter) (Q2 is turned OFF), but the potential at point A' (AMP 2) will decrease to a minimum of OV (ground potential) via Q4 (collector – emitter) (Q3 is turned OFF). Therefore, the potential difference between the two ends of RL will be the sum of the 2 voltage changes applied to A and A'.

The output current "ic" flowing during this period from +VC → Q1 (collector) → Q1 (emitter) → RL → Q4 (emitter) → Q4 (collector) → 0 (ground).

In the same manner, Q2 and Q3 are turned ON, and Q1 and Q4 turned OFF during the latter half of the ei cycle.

The output current "ic" then flows from +VC → Q3 (collector) → Q3 (emitter) → RL → Q2 (emitter) → Q2 (collector) → 0 (ground).

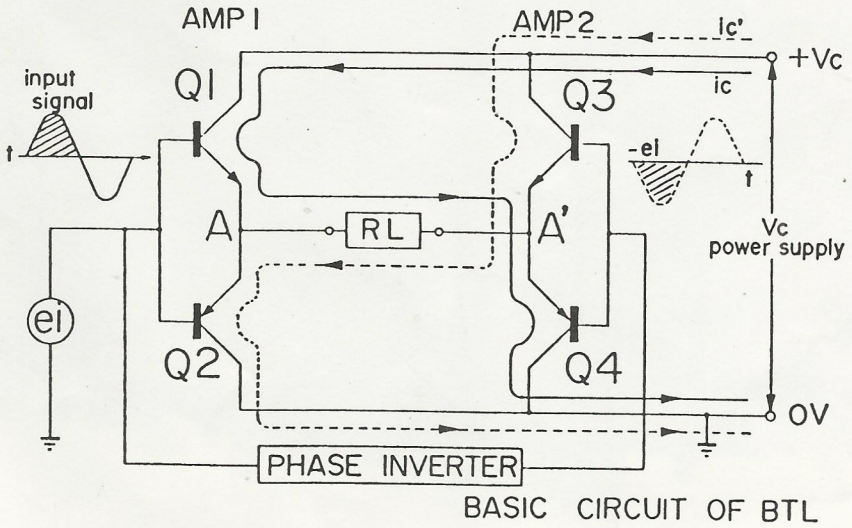

Fig 31

2. COMPARISON BETWEEN SEPP AND BTL CIRCUITS

2-1. SEPP CIRCUIT OUTPUT POWER

Fig 32 shows how a single SEPP circuit (for example, AMP 1 in Fig 31 above) operates.

During the first half cycle ($t_0 \sim t_2$) of the input signal "ei", the potential at point A reaches a maximum of Vc, whille the potential at point A' reaches a minimum of O (ground potential). Hence, the potential difference across RL (i.e. the voltage applied to RL) varies from O to Vc. The current during this half cycle is "ic", flows from A to A'.

During the latter half cycle ($t_2 \sim t_4$), the voltage applied across RL again varies from O to Vc, but the current "ic" flows in the opposite direction. If "ic" is assumed to be positive, "ic" will be minus, and the voltage variation be between O and -Vc. Consequently, whereas the voltage change across the RL terminals during a full "ei" cycle is only O$\sim \pm$Vc/2 in the SEPP circuit, the similar changes in the BTL circuit are twice as large (O $\sim \pm$Vc).

The maximum output power pob is expressed by the following formula :-

$$\text{Max. output power } P_{OB} = \frac{\text{Effective voltage } E_B^2}{\text{Load resistance RL}}$$

$$= \frac{(Vc/\sqrt{2})^2}{RL}$$

$$= \frac{Vc^2}{2RL} \quad \cdots\cdots\cdots\cdots\cdots\cdots\cdots\cdots\cdots\cdots\cdots\cdots \quad (2)$$

$$\text{where } E_B = \frac{Vc}{\sqrt{2}}$$

3. RATIO OF BTL OUTPUT POWER TO SEPP OUTPUT POWER

The ratio of the BTL output power, P_{OB}(equation 2) to the SEPP output power, P_{OS} (equation 1) is :-

$$P_{OB} : P_{OS} = \frac{Vc^2}{2RL} = \frac{Vc^2}{8RL}$$

$$\text{i. e. } \frac{P_{OB}\ Vc^2}{8RL} = \frac{P_{OS}\ Vc^2}{2RL}$$

$$* \ \frac{P_{OB}}{4} = P_{OS}$$

$$* \ P_{OB} = P_{OS} \times 4$$

That is, the BTL circuit is capable of producing 4 times the amount of output power than the SEPP circuit under identical conditions such as power source voltage (Vc) and load resistance (RL).

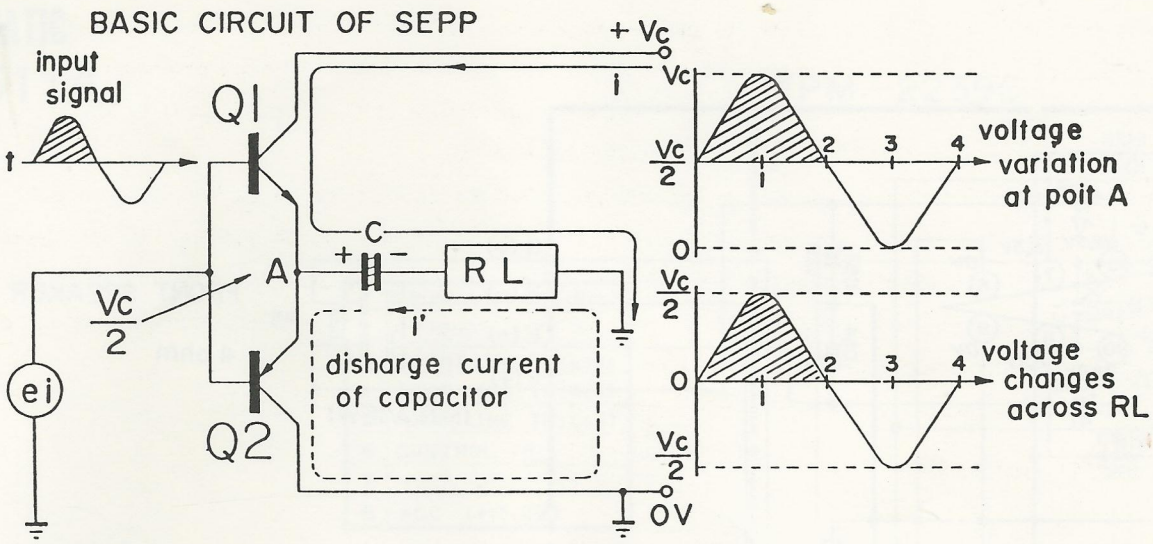

Fig 32

When the input signal "ei" is applied, the potential at point A varies between a maximum of Vc and a minimum of 0 (ground potential) with a central value of Vc/2. But since direct current is blocked by capacitor C, the potential difference across both ends of RL will vary between a maximum of Vc/2 and a minimum of -Vc/2, centering around O. (This is assuming full swing transistors, and negligible circuit loss).

Since output power is determined by the load resistance RL, and the effective voltage Es applied to RL, the maximum output power Pos available under these conditions may be expressed as follows: (Assuming negligible circuit loss)

$$\text{Max. output power } Pos = \frac{\text{Effective voltage } Es^2}{\text{Load resistance } RL}$$

$$\text{Since } Es = \frac{Vc/2}{\sqrt{2}} = \frac{Vc}{2\sqrt{2}}$$

$$Pos = \frac{(Vc/2\sqrt{2})^2}{RL} = \frac{Vc^2}{8RL} \quad \cdots\cdots (1)$$

In other words, $Vs^2/8RL$ is the theoretical SEPP output power.

2-2 BTL CIRCUIT OUTPUT POWER

Fig 33 indicates the voltage changes ocurring across the load resistance (RL) (between A and A') in the BTL circuit shown in Fig 31

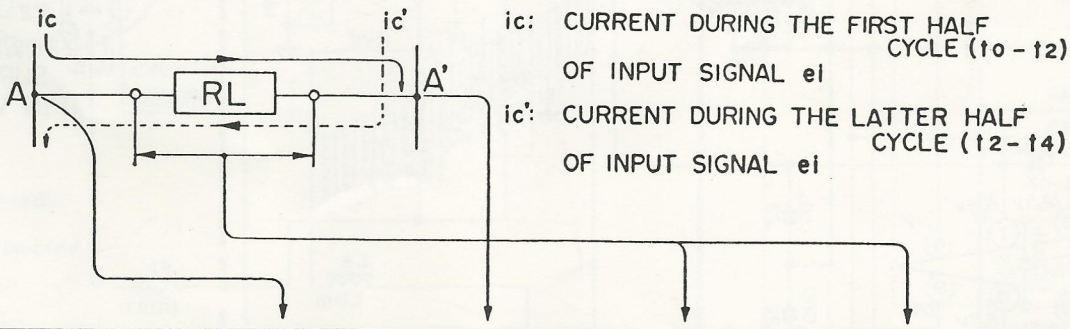

INPUT SIGNAL	TIME	POTENTIAL AT POINT A	POTENTIAL AT POINT A'	POTENTIAL DIFFERENCE BETWEEN A & A'	VOLTAGE ACROSS RL	CURRENT
-ei 0 ei	t o	Vc/2	Vc/2	0	-Vc 0 Vc	
	t 1	Vc	0	Vc		
	t 2	Vc/2	Vc/2	0		
	t 3	0	Vc	Vc (-Vc)		
t	t 4	Vc/2	Vc/2	0		

Fig 33

SCHEMATIC
CR511A

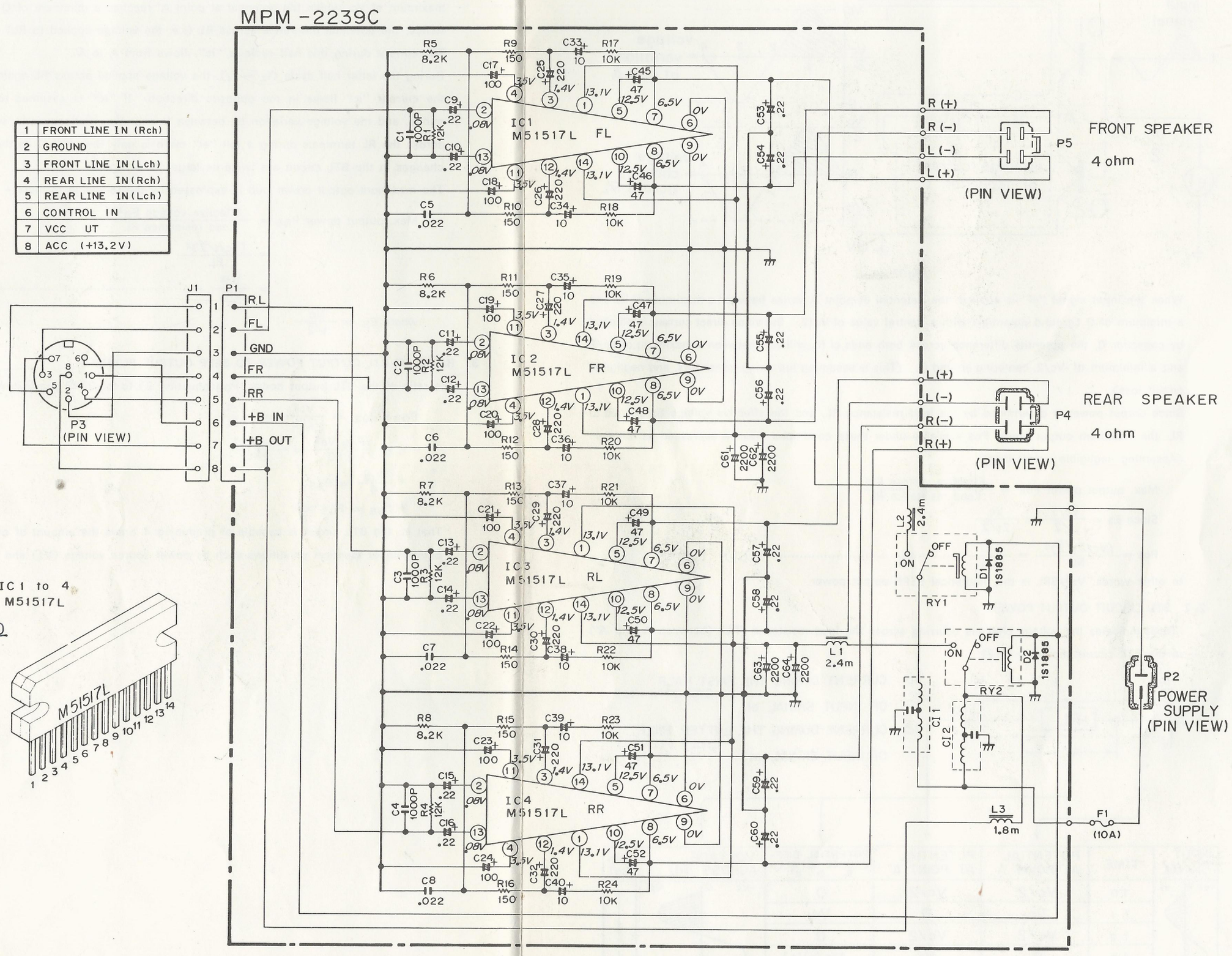

1	FRONT LINE IN (Rch)
2	GROUND
3	FRONT LINE IN (Lch)
4	REAR LINE IN (Rch)
5	REAR LINE IN (Lch)
6	CONTROL IN
7	VCC UT
8	ACC (+13.2V)

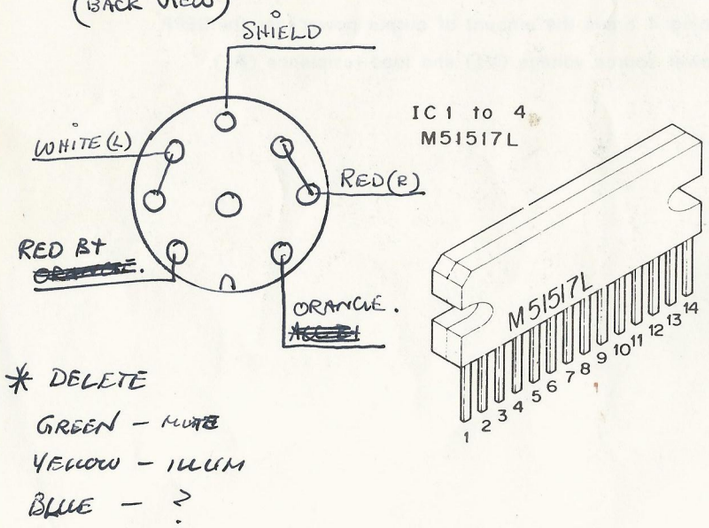

NOTES:
1. All capacitance in Micro farad, $P=10^{-12}$
2. All resistance in ohm, $K=10^{3}$
3. All inductance in henry, $m=10^{-3}$, $\mu=10^{-6}$
4. DC voltage against the chassis measured with 100k ohm/volt meter, power supply set at +13.2 VDC, no signal input.

Fig 34

WIRING ON PC BOARD

CR511A

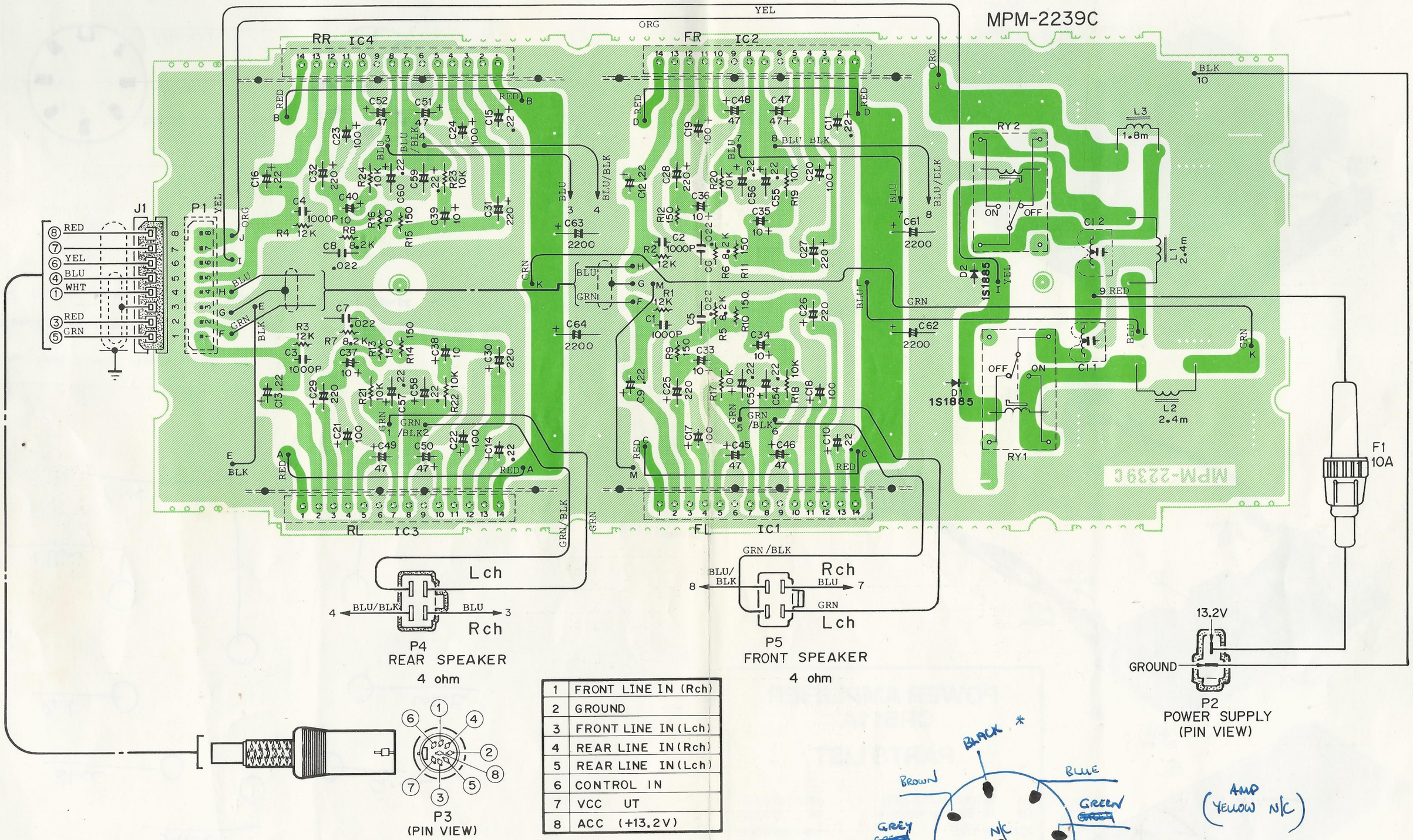

1	FRONT LINE IN (Rch)
2	GROUND
3	FRONT LINE IN (Lch)
4	REAR LINE IN (Rch)
5	REAR LINE IN (Lch)
6	CONTROL IN
7	VCC UT
8	ACC (+13.2V)

Fig. 35

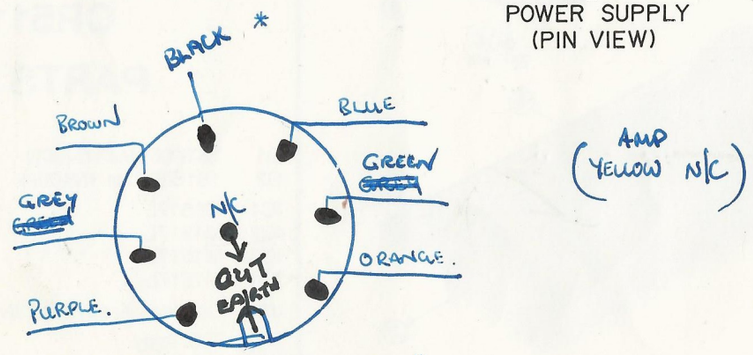

(AMP YELLOW N/C)

3510 ALPINE AMP SOCKET

* MUST LINK EARTHS ON BOTTOM OF PCB.

** REMOVE 1KΩ RESISTORS 1 PER CH. (FOR MAX VOL) R104, 204, 304, 404

EXPLODED VIEW
CR115A

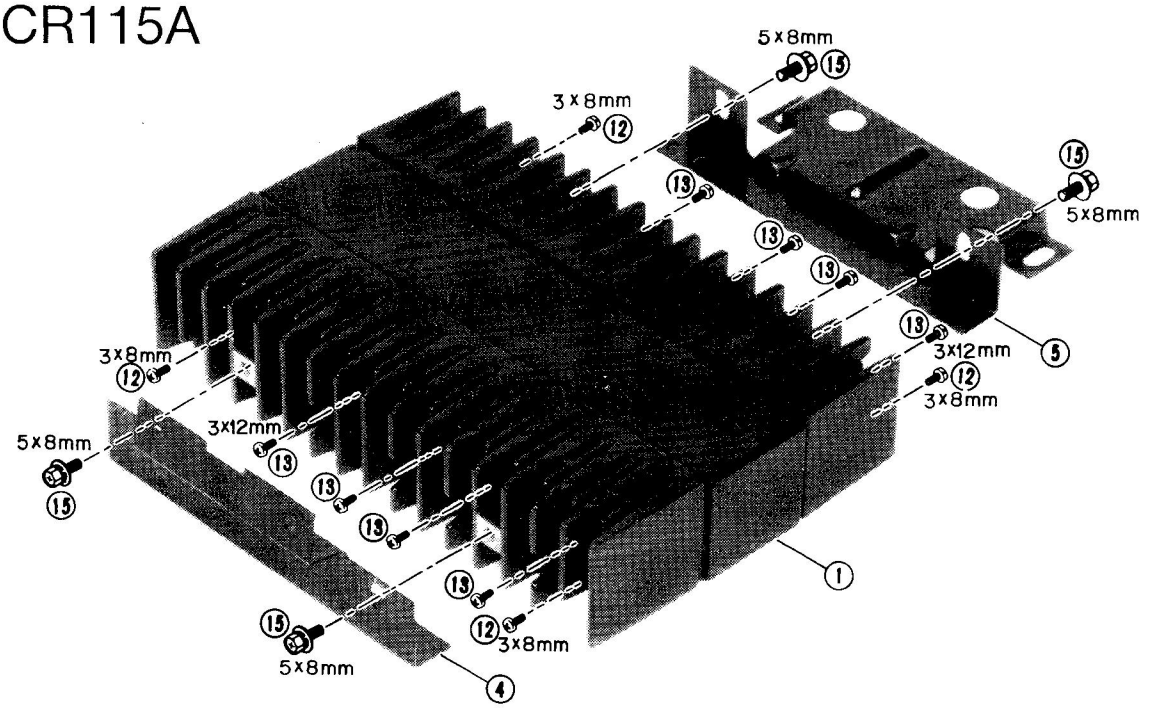

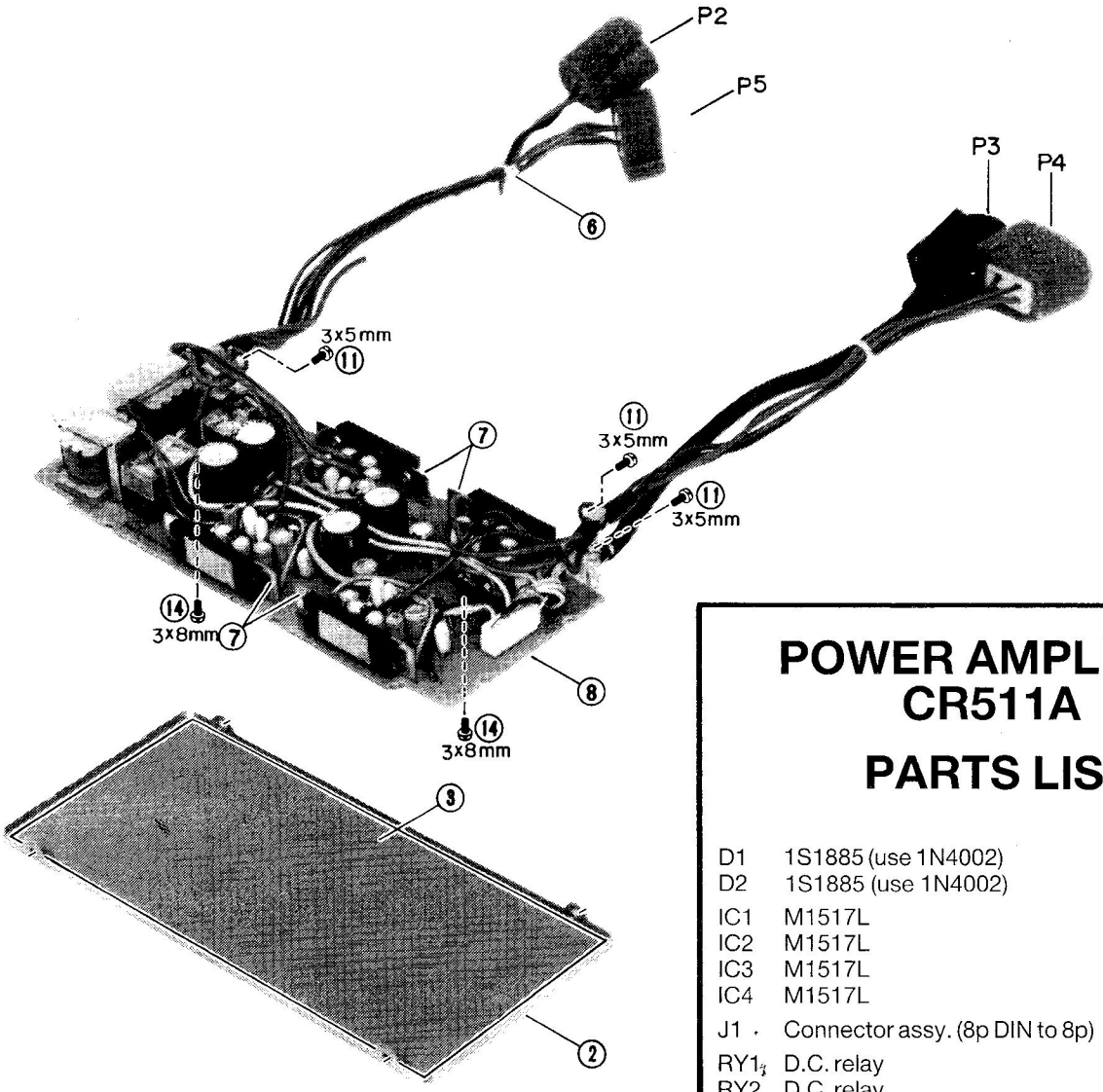

Fig 36

POWER AMPLIFIER CR511A

PARTS LIST

D1	1S1885 (use 1N4002)	4822 130 30684
D2	1S1885 (use 1N4002)	4822 130 30684
IC1	M1517L	4802 209 87493
IC2	M1517L	4802 209 87493
IC3	M1517L	4802 209 87493
IC4	M1517L	4802 209 87493
J1	Connector assy. (8p DIN to 8p)	4802 321 27302
RY1	D.C. relay	4802 281 37005
RY2	D.C. relay	4802 281 37005

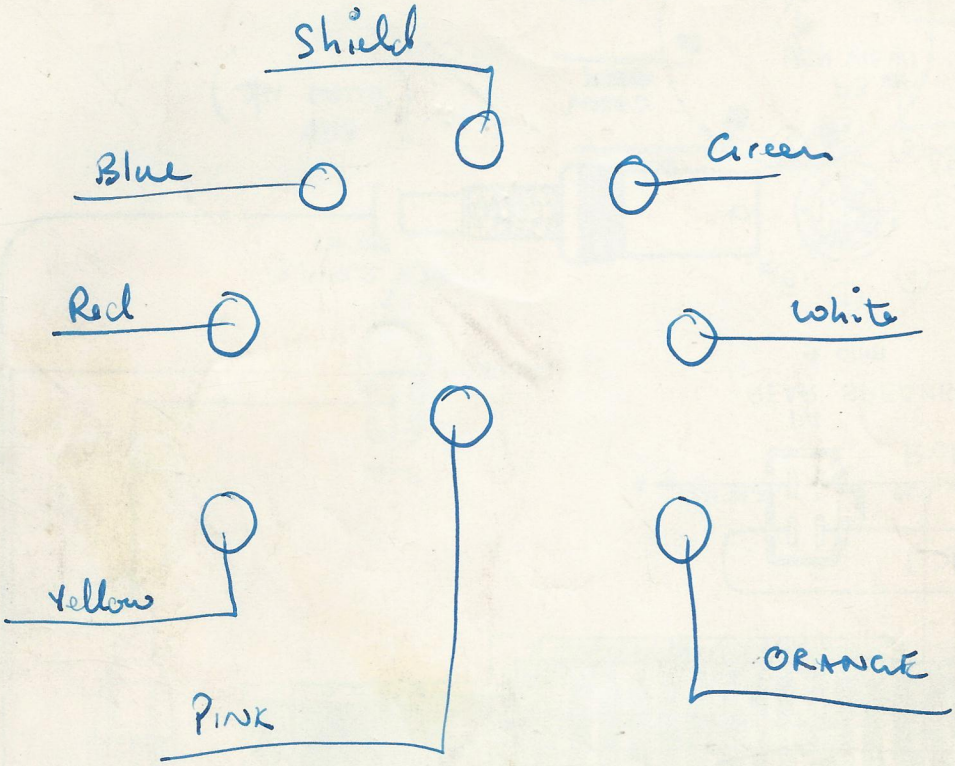

NO AM / FM — SCANS BUT NO STOP
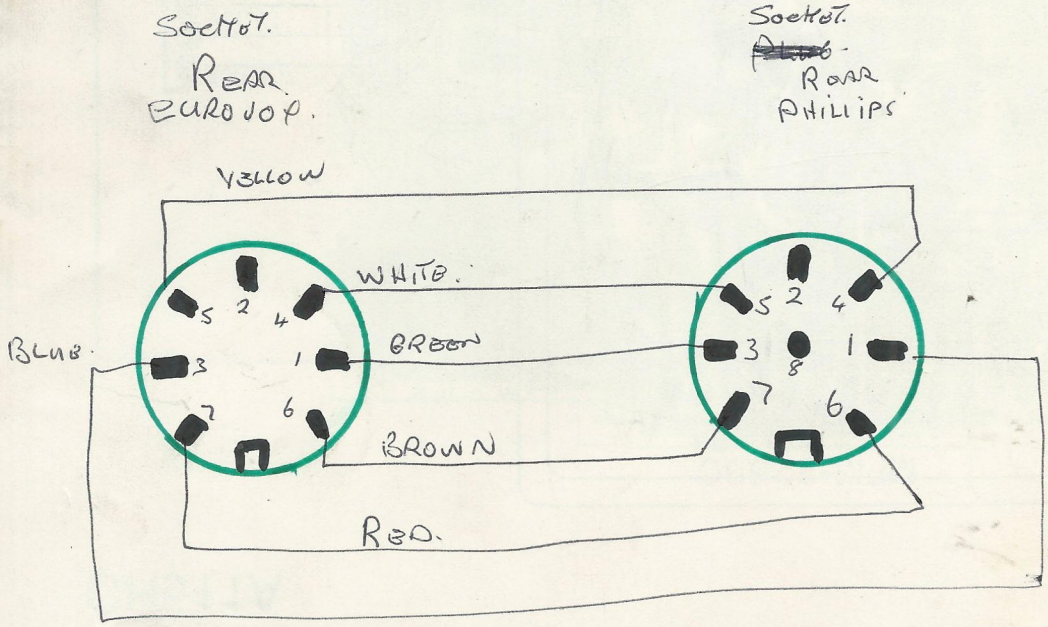
Fix - CHECK FOR VOLTS ON COLLECTOR Q103 101·9 SHOULD BE APROX 4·8 VOLTS. — CHECK ON OTHER SIDE OF 10K SHOULD HAVE SAME — ALSO AT TV ON TUNER — IF NOT CHECK TUNER FRONT END.