TOYOTA

AUDIO COMPONENT SERVICE MANUAL

AM/FM STEREO FOR ELECTRONIC TUNER WITH COMPACT DISC and CASSETTE TAPE PLAYER (Dolby B/C* NR)

VEHICLE	DESTINATION	PRODUCED AFTER	TOYOTA PART No.	ID CODE	FUJITSU TEN MODEL No.
SUPRA, CELICA CAMRY	AMERICA	October, 1991	86120-33110	16804	CD-1634TL1
PREVIA			86120-28140	16805	CD-1636TL1

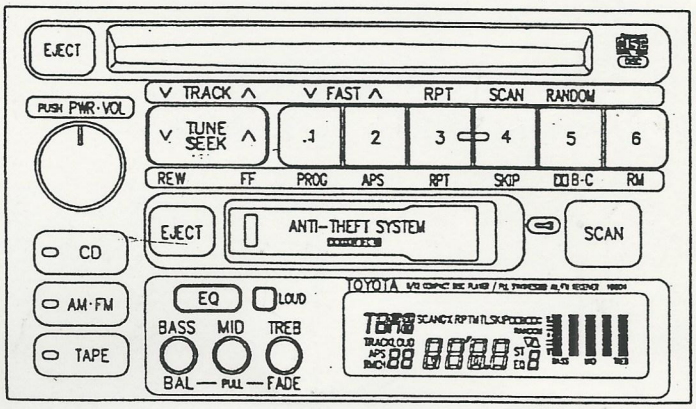

<CD-1634>

TABLE OF CONTENTS

MASTER COPY

	PAGE
SPECIFICATIONS, CONNECTIONS, HOOK-UP	2, 3
EXPLODED VIEW, SCHEMATIC, WIRING ON PC BOARDS	4, 5, 6-15
SCHEMATIC, WIRING ON PC BOARDS (CD DECK UNIT)	16-21
EXPLODED VIEW (CS DECK UNIT)	22
SCHEMATIC, WIRING ON PC BOARDS (CS DECK NIT)	23-26
EXPLANATION ON IC TERMINALS	27, 28
DOLBY NR LEVEL ALIGNMENT	29
EXPLODED VIEW (CD DECK UNIT)	30
REPLACEMENT PARTS LIST	31-40

*Dolby noise reduction manufactured under license from Dolby Laboratories Licensing Corporation.
"DOLBY" and the double-D symbol are trademarks of Dolby Laboratories Licensing Corporation.

Manufactured for TOYOTA

by FUJITSU TEN LIMITED

黒 4.1.08 峙

PUB. NO. SM-764

SPECIFICATIONS

MAIN UNIT

(RADIO SECTION)	AM	FM
TUNING RANGE	530 to 1710 kHz	87.9 to 107.9 MHz
SENSITIVITY	34 dB or better	8±6 dB or better
A G C	$55\pm^{5}_{7}$ dB or better	
LIMITING SENSITIVITY		5 ± 5 dB (98.1MHz)
SEPARATION		25 dB or better
SENSITIVITY AT ELECTRONIC TUNING	Distant: 30 ± 5 dB Local: Distant plus 20 ± 5 dB	Distant: 22 ± 6 dB Local: Distant plus 25 ± 6 dB
SIGNAL TO NOISE RATIO	21 dB or better (35 dBμ input)	46 dB or better (54 dBμ input) Stereo: 30 dB or better (54 dBμ input)

(CASSETTE DECK SECTION)

NUMBER OF TRACKS	4–track 2–channel
TAPE SPEED	4.76cm/sec. (1–7/8", i.p.s.)
WOW & FLUTTER	0.3 % or better (RMS)
CROSSTALK	40 dB or better (1kHz, B.P.F.)
SEPARATION	30 dB or better

FREQUENCY RESPONSE

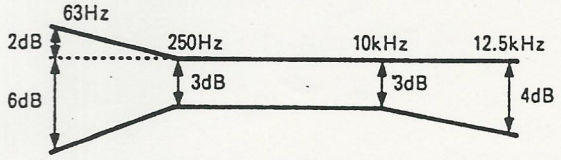

DOLBY PROCESSOR FREQUENCY RESPONSE

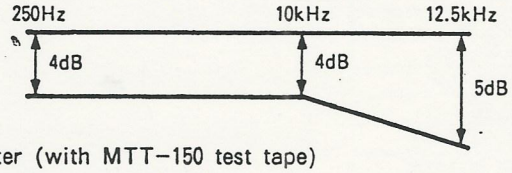

SIGNAL TO NOISE RATIO	50 dB or better (with MTT–150 test tape)
TAKE–UP TORQUE	40 to 50 g–cm

(CD SECTION)

SYSTEM	Compact Disc Digital Audio
APPLIED DISC	Compact Disc (8cm/12cm)
LASER WAVELENGTH	Approx 780nm
FOCUS ERROR DETECTION SYSTEM	Astigmatic method system
FREQUENCY RESPONSE	100Hz : ±1.5dB (1kHz)
SIGNAL TO NOISE RATIO	70dB or better

(COMMON SECTION)

POWER OUTPUT	150mV ± 3dB (CASSETTE PLAY), 472mV ± 2dB (CD PLAY)
SPEAKER IMPEDANCE	10 k ohms
POWER INPUT	12–volt car battery, negative terminal to ground
Voltage	13.2 VDC
Current	Approx. 0.7 amperes (0.5w ×5), MAX. 1.0 amperes
DIMENSIONS	180(W)×50(H)×160(D)mm (7–3/32", 1–31/32", 6–5/16")
WEIGHT	Unit–2.6 kg (5.73 lbs.)

NOTES: Unless otherwise noted specification is measured with balance and fader control at center.

CONNECTIONS

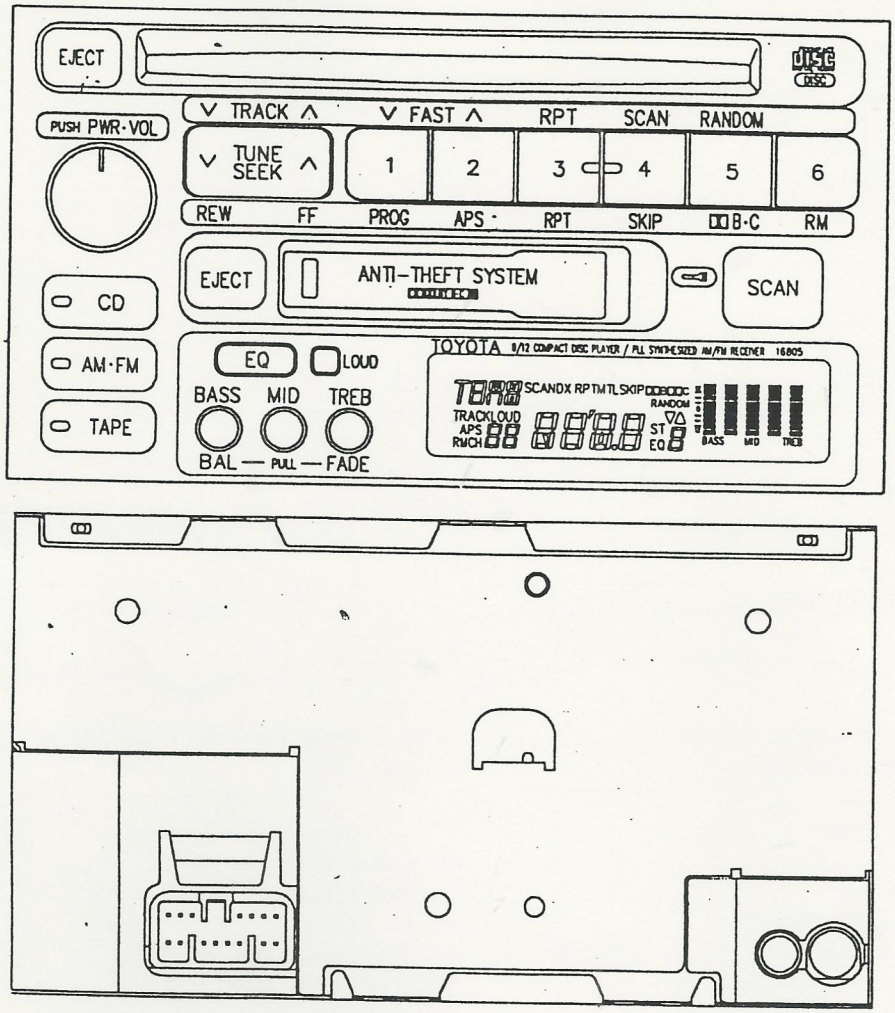

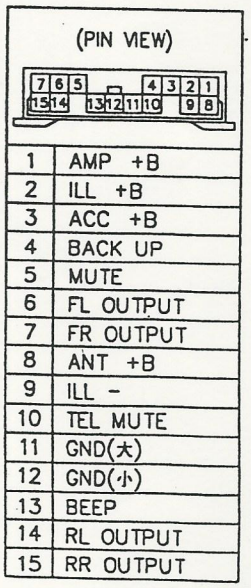

1	AMP +B
2	ILL +B
3	ACC +B
4	BACK UP
5	MUTE
6	FL OUTPUT
7	FR OUTPUT
8	ANT +B
9	ILL -
10	TEL MUTE
11	GND(大)
12	GND(小)
13	BEEP
14	RL OUTPUT
15	RR OUTPUT

Fig. 1

CAUTION : ID Numbers are different from model to model.

HOOK-UP

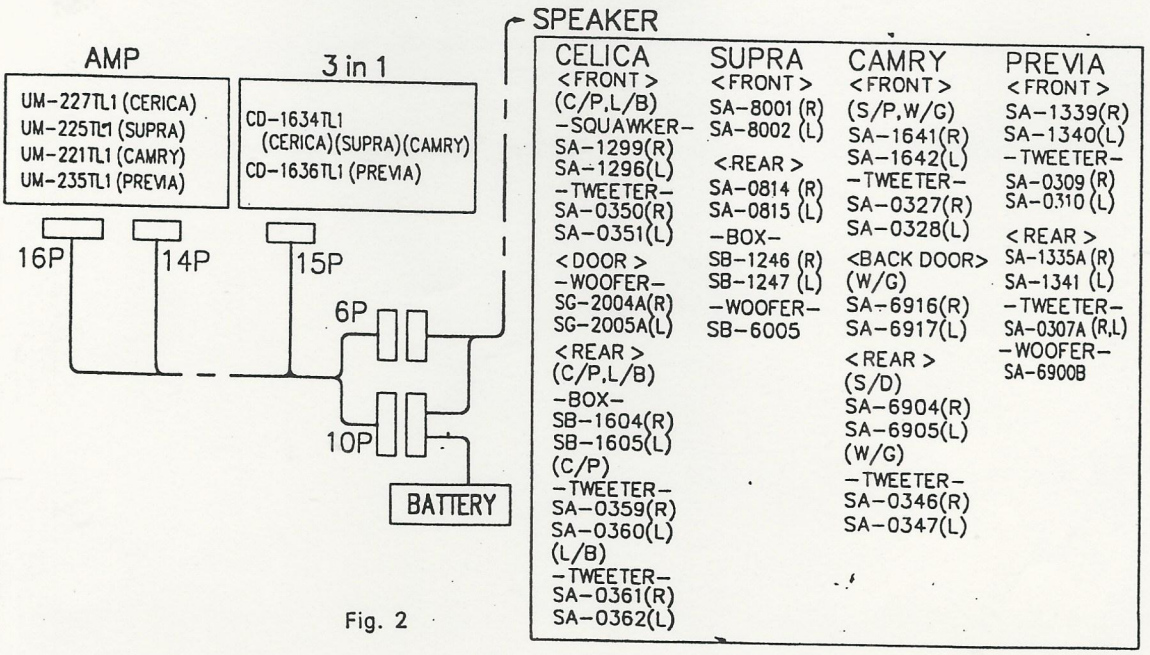

Fig. 2

EXPLODED VIEW

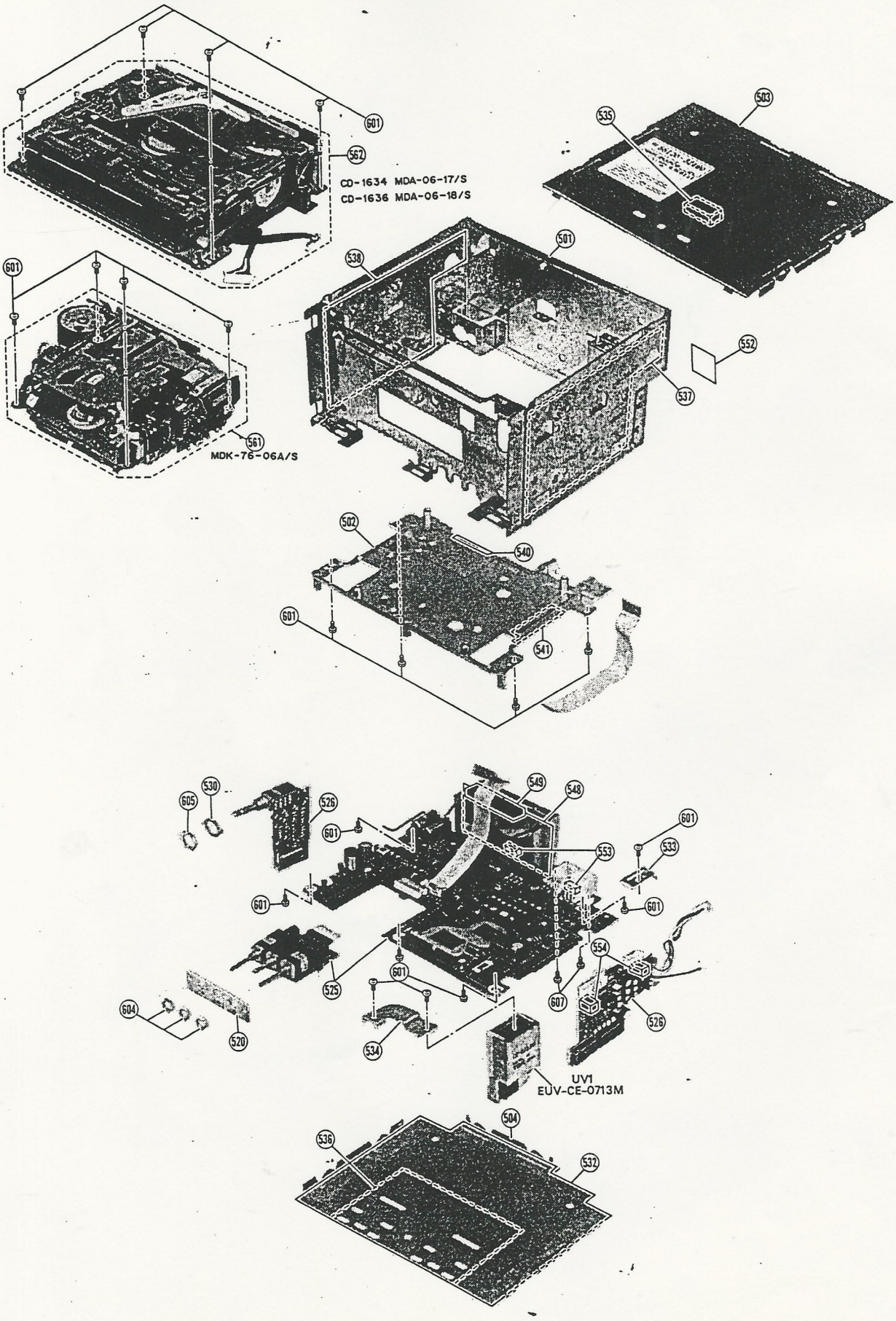

Fig. 3

NOTE: Printed circuit board does not include component parts to be mounted.

EXPLODED VIEW 〈PANEL〉

SM-764
〔CD-1634TL1〕
〔CD-1636TL1〕

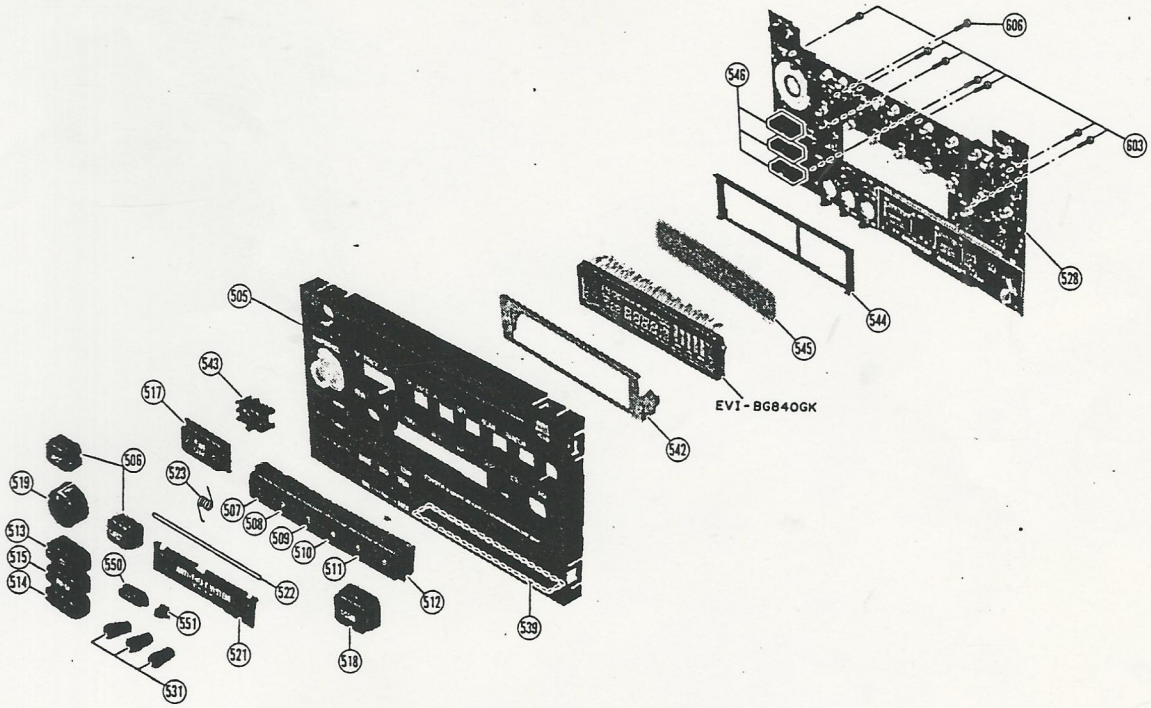

Fig. 4

EXPLODED VIEW 〈CD DECK UNIT SUB〉 (MDA-16-17/S) (MDA-16-18/S)

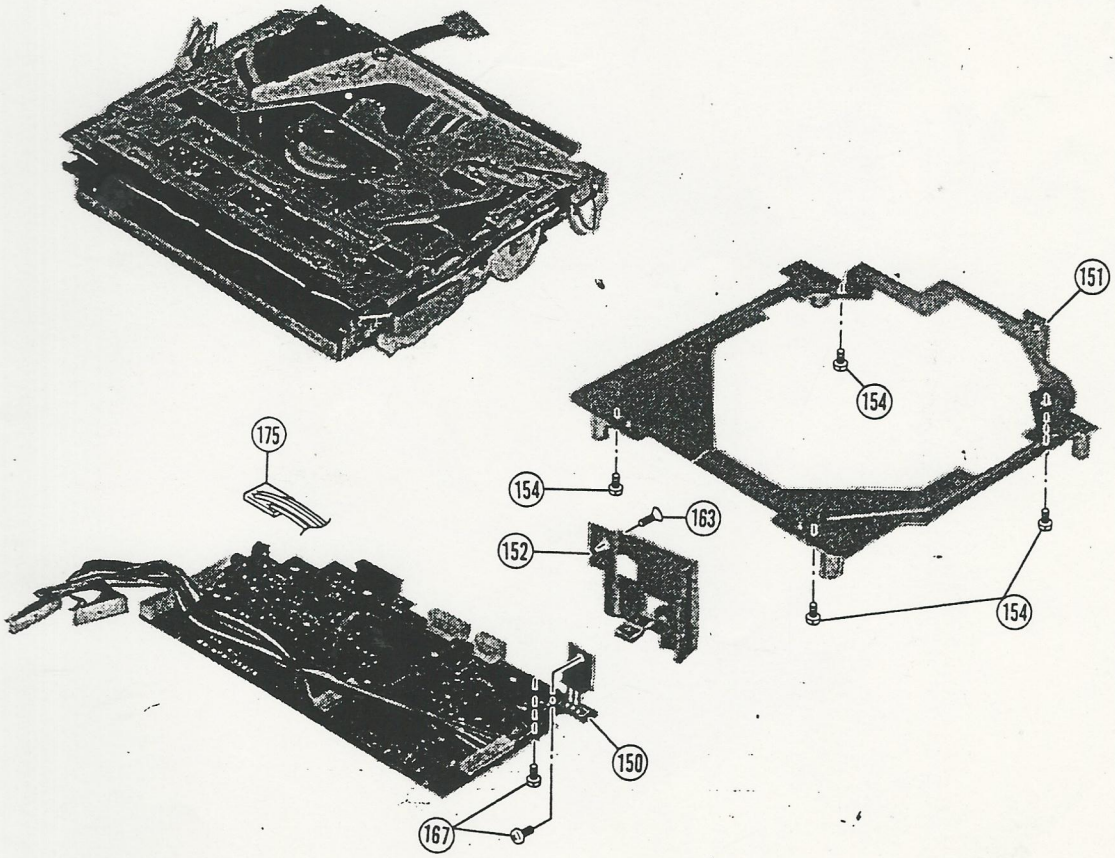

Fig. 5

NOTE: Printed circuit board does not include component parts to be mounted.

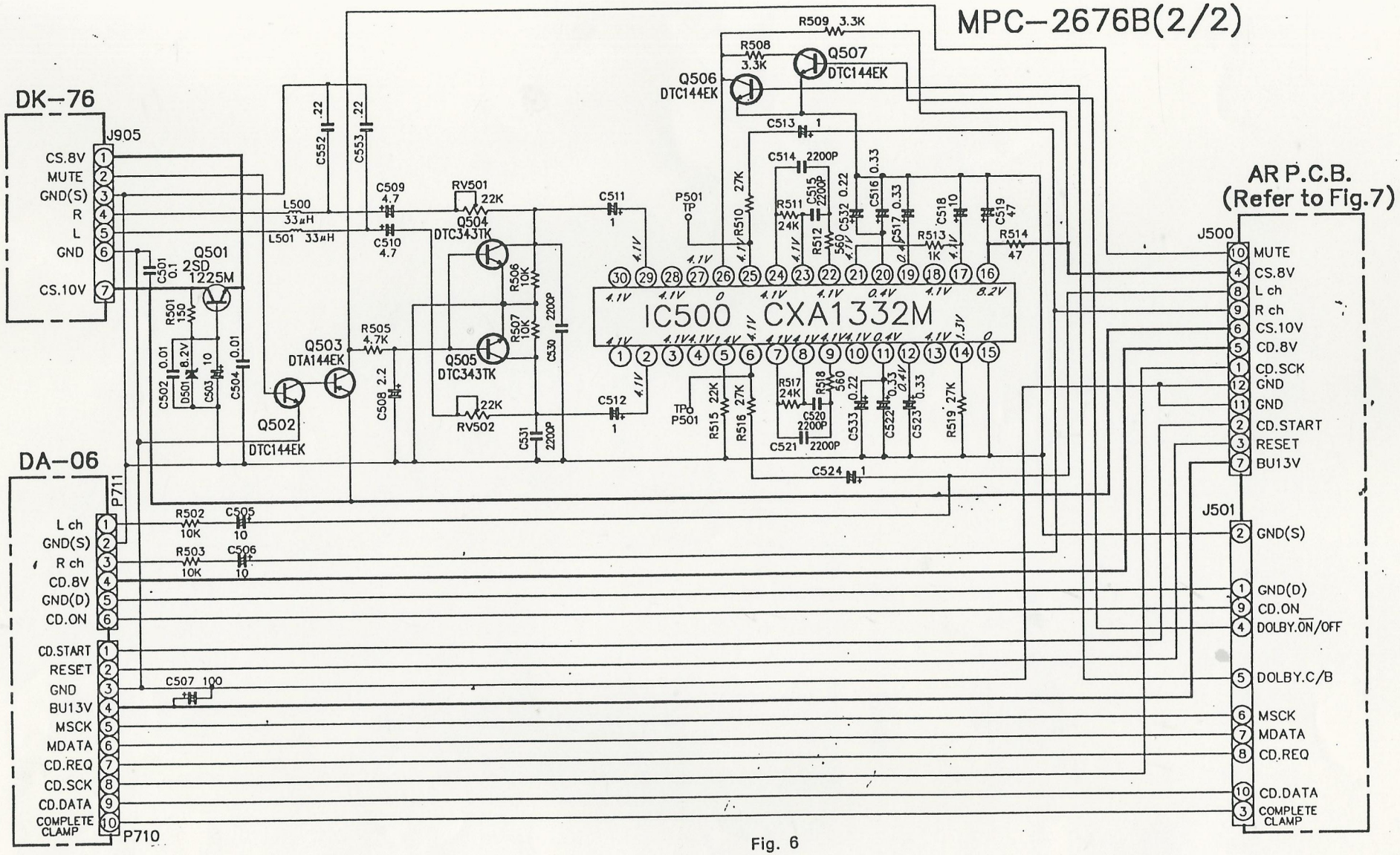
MPC-2676B(2/2)
DK-76
J905
CS.8V
MUTE
GND(S)
R
L
GND
CS.10V
DA-06
P711
L ch
GND(S)
R ch
CD.8V
GND(D)
CD.ON
CD.START
RESET
GND
BU13V
MSCK
MDATA
CD.REQ
CD.SCK
CD.DATA
COMPLETE CLAMP
P710
IC500 CXA1332M
AR P.C.B.
(Refer to Fig.7)
J500
MUTE
CS.8V
L ch
R ch
CS.10V
CD.8V
CD.SCK
GND
GND
CD.START
RESET
BU13V
J501
GND(S)
GND(D)
CD.ON
DOLBY.ON/OFF
DOLBY.C/B
MSCK
MDATA
CD.REQ
CD.DATA
COMPLETE CLAMP
Q501 2SD 1225M
Q502 DTC144EK
Q503 DTA144EK
Q504 DTC343TK
Q505 DTC343TK
Q506 DTC144EK
Q507 DTC144EK
RV501 22K
RV502 22K
L500 33μH
L501 33μH
P501 TP
TP P501

Fig. 6

SCHEMATIC <AR MAIN>

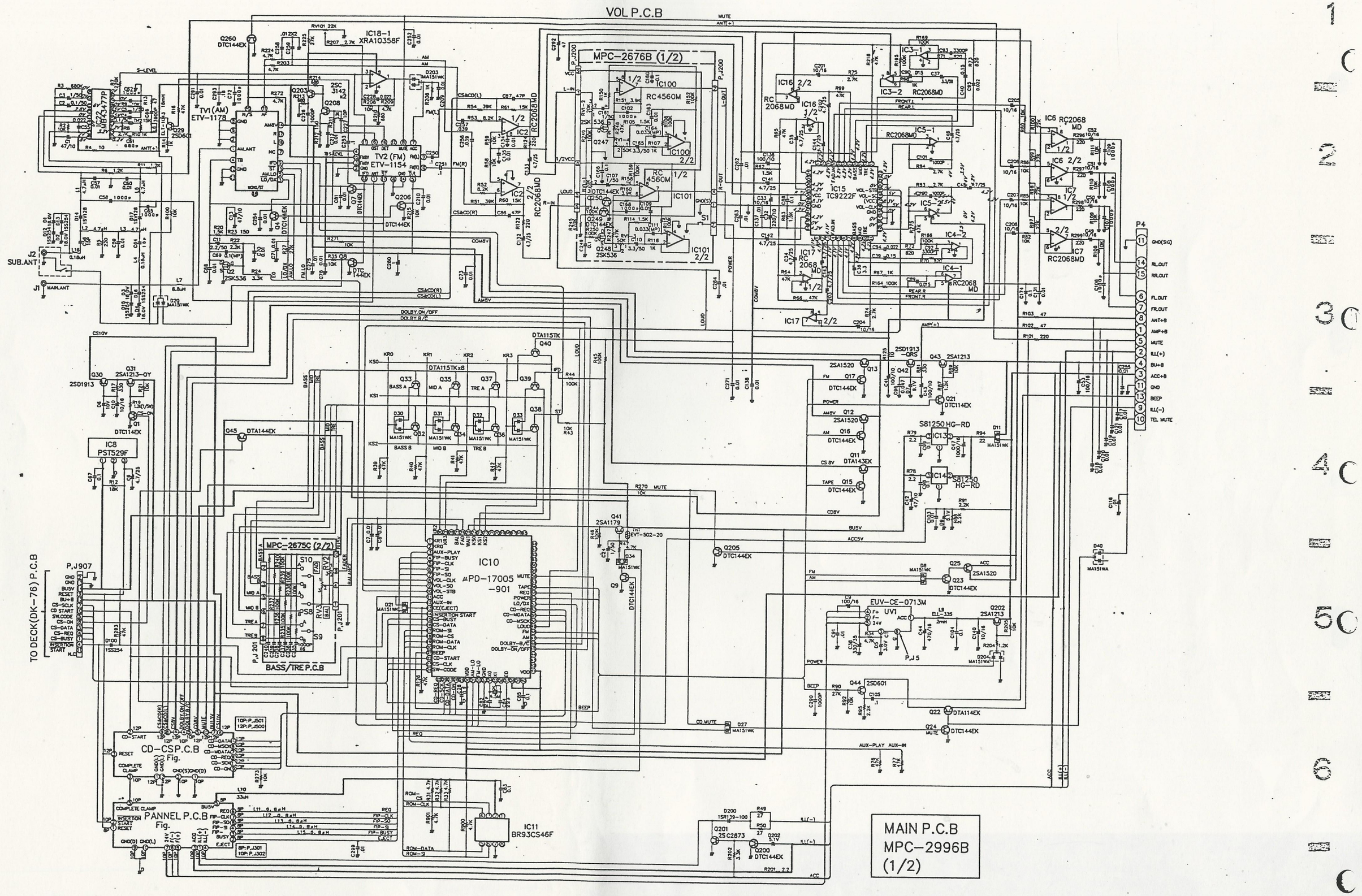

Fig. 7

NOTES: 1. All capacitance in Micro farad, $P=10^{-12}$

2. All resistance in ohm, $K=10^{3}$

3. All inductance in henry, $m=10^{-3}$, $\mu=10^{-6}$

4. DC voltages against the chassis measured with 10M ohms digital volt meter, power supply set at +13.2 VDC, no signal input.

WIRING ON PC BOARD <AR MAIN>

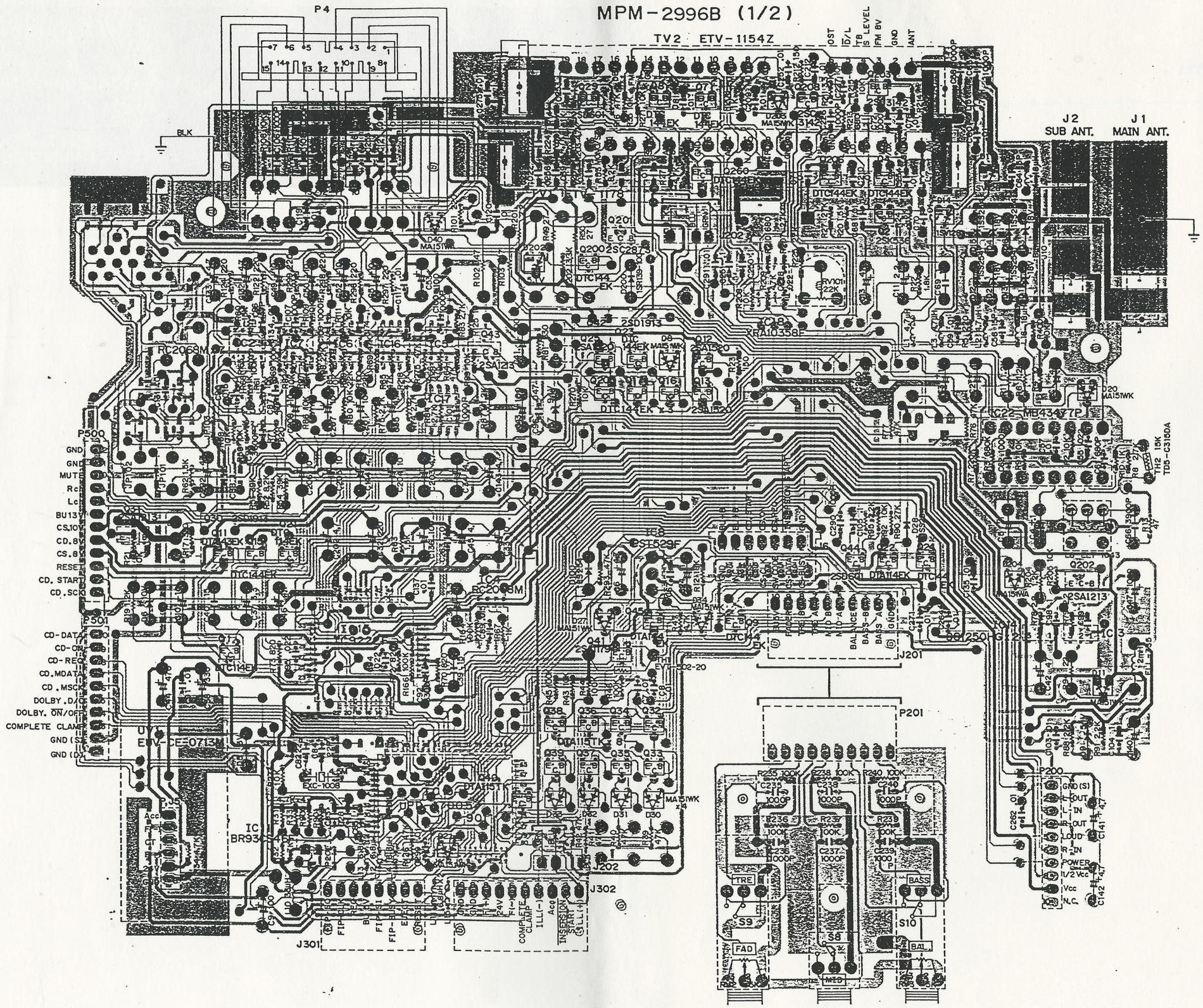

Fig. 8

IC No.	Co-ordinates
IC 2, 3, 7	C-3
IC 4	E-5
IC 5, 6, 16 17	D-3
IC 8	F-4
IC10	D-6
IC11	C-6
IC13, 14	H-5
IC15	D-5
IC18	F-3
IC22	H-3

Q No.	Co-ordinates
Q 1	C-5
Q 2, 4	G-2
Q 7, 8	F-2
Q 9,32	F-5
Q11, 15, 21 30	C-4
Q12, 13, 16	F-3
Q17, 23, 25	E-3
Q22, 24, 44	G-4
Q29	E-2
Q31	B-4
Q33	F-6
Q34, 36, 38 41, 45	E-5
Q35, 37, 39 40	E-6
Q42, 43, 200	E-3
Q201	E-2
Q202	H-4
Q203	G-1
Q205	E-3
Q206	G-2
Q208, 260	F-2

SM-764
[CD-1634TL1]
[CD-1636TL1]

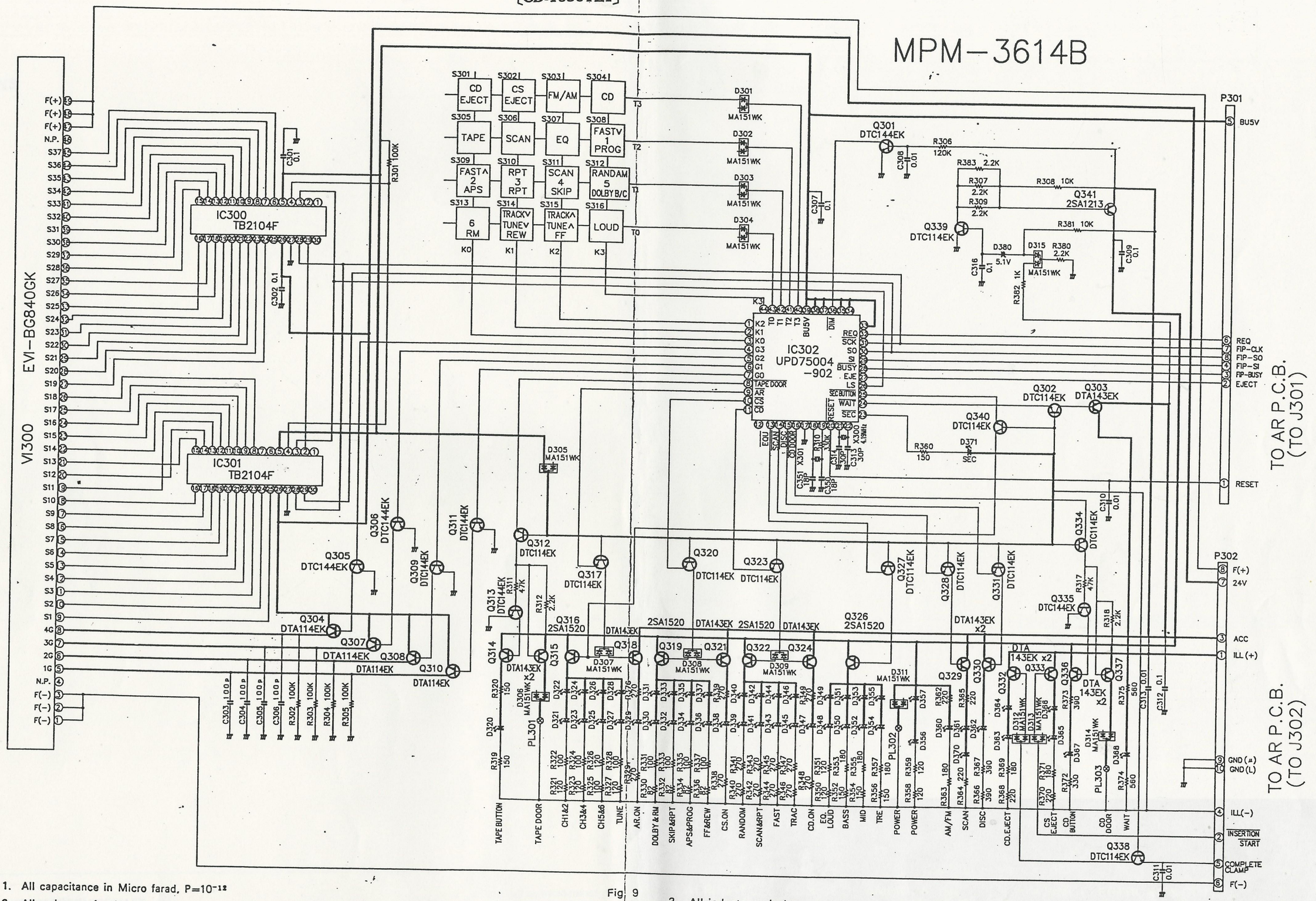

NOTES: 1. All capacitance in Micro farad, $P=10^{-12}$
2. All resistance in ohm, $K=10^{3}$
3. All inductance in henry, $m=10^{-3}$, $\mu=10^{-6}$
4. DC voltages against the chassis measured with 10M ohms digital volt meter, power supply set at +13.2 VDC, no signal input.

Fig. 9

WIRING ON PC BOARDS 〈PANEL〉

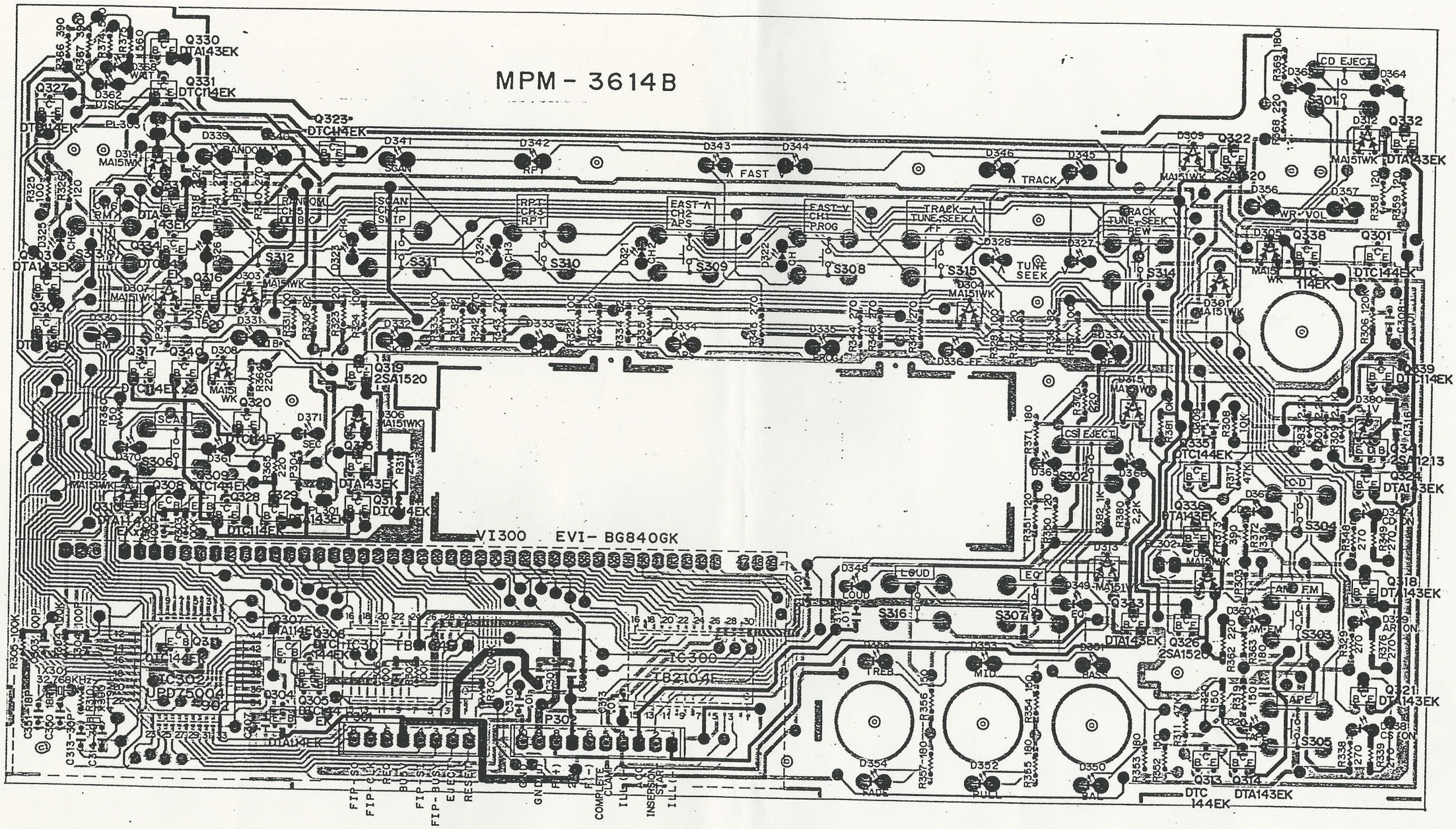

I C No.	Co-ordinates
I C100	L-6
I C101	M-6
I C300	E-5
I C301	C-5
I C302	B-5
I C500	M-4

Q No.	Co-ordinates
Q249, 250	M-6
Q301, 332	I-2
Q302, 303	A-3
Q304,307,311	B-5
Q305, 306	C-5
Q308, 309	B-4
Q310	A-4
Q312, 315	C-4
Q313, 314	H-6
Q316,317,320	B-3
Q318,324,341	I-4
Q319	C-3
Q321	I-5
Q322, 338	H-2
Q323	C-2
Q326	H-5
Q327	A-2
Q328, 329	B-4
Q330	B-1
Q331, 337	B-2
Q333	G-5
Q334, 340	B-3
Q339	I-3
Q335, 336	H-4
Q501	L-2
Q502	K-4
Q503	K-3
Q504	M-2
Q505	L-4
Q506	M-4
Q507	K-5

ANODE CONNECTION

	S1	S2	S3	S4	S5	S6	S7	S8	S9	S10	S11	S12	S13	S14	S15	S16	S17	S18
1G	B9 (ち)	B8 (ち)	B7 (ち)	B6 (ち)	B5 (ち)	B4 (ち)	B3 (ち)	B2 (ち)	B1 (ち)	B9 (ゆ)	B8 (ゆ)	B7 (ゆ)	B6 (ゆ)	B5 (ゆ)	B4 (ゆ)	B3 (ゆ)	B2 (ゆ)	B1 (ゆ)
2G	EQ	ST	d	e	c	g	f	b	a	B9 (ち)	B8 (ち)	B7 (ち)	B6 (ち)	B5 (ち)	B4 (ち)	B3 (ち)	B2 (ち)	B1 (ち)
3G	–	–	1d	1e	1c	1g	1f	1b	1a	Dp	2h	2d	2e	2c	2g	2f	2b	2a
4G	APS	CH	1d	1e	1c	1g	1f	1b	1a	RM	TRACK	2d	2e	2c	2g	2f	2b	2a

S19	S20	S21	S22	S23	S24	S25	S26	S27	S28	S29	S30	S31	S32	S33	S34	S35	S36	S37
B9 (ち)	B8 (ち)	B7 (ち)	B6 (ち)	B5 (ち)	B4 (ち)	B3 (ち)	B2 (ち)	B1 (ち)	–	MID	TREB	–	–	–	–	–	–	–
B9 (ち)	B8 (ち)	B7 (ち)	B6 (ち)	B5 (ち)	B4 (ち)	B3 (ち)	B2 (ち)	B1 (ち)	[illegible]	BASS	▲	▼	RANDOM	□□C	□□B	SKIP	MTL	RPT
–	4h	4d	Ae	4c	4g	4f	4b	4a	–	–	com	3d	3e	3c	3g	3f	3b	3a
LOUD	T	[illegible]	[illegible]	[illegible]	[illegible]	[illegible]	[illegible]	[illegible]	–	DX	SCAN	[illegible]	[illegible]	[illegible]	[illegible]	[illegible]	[illegible]	[illegible]

Fig. 10

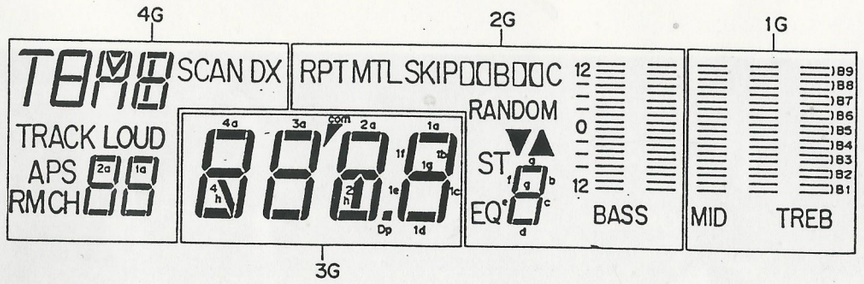

WIRING ON PC BOARDS 〈CS-CD〉

SM-764
〔CD-1634TL1〕
〔CD-1636TL1〕

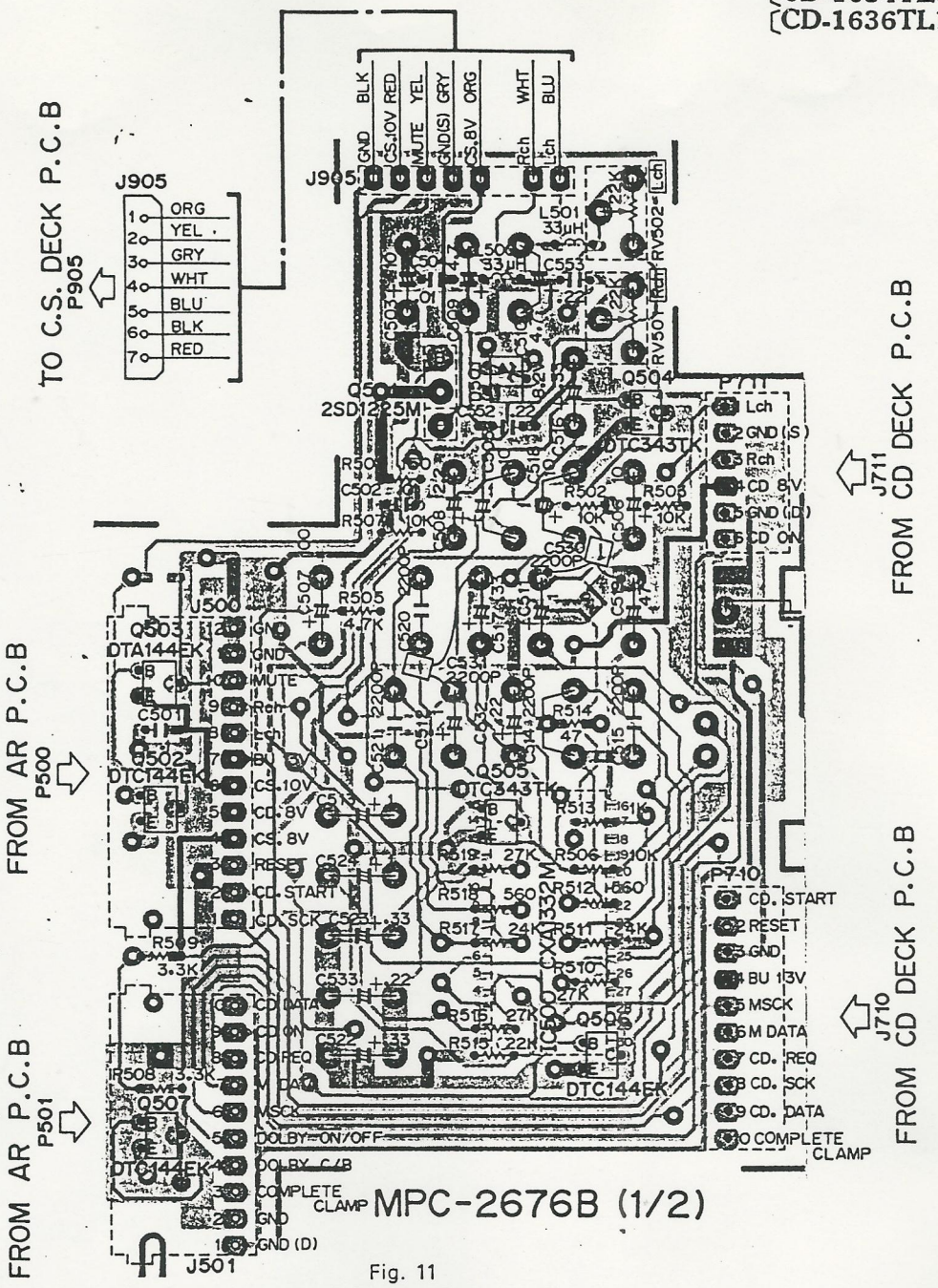

Fig. 11

〈VOL.〉

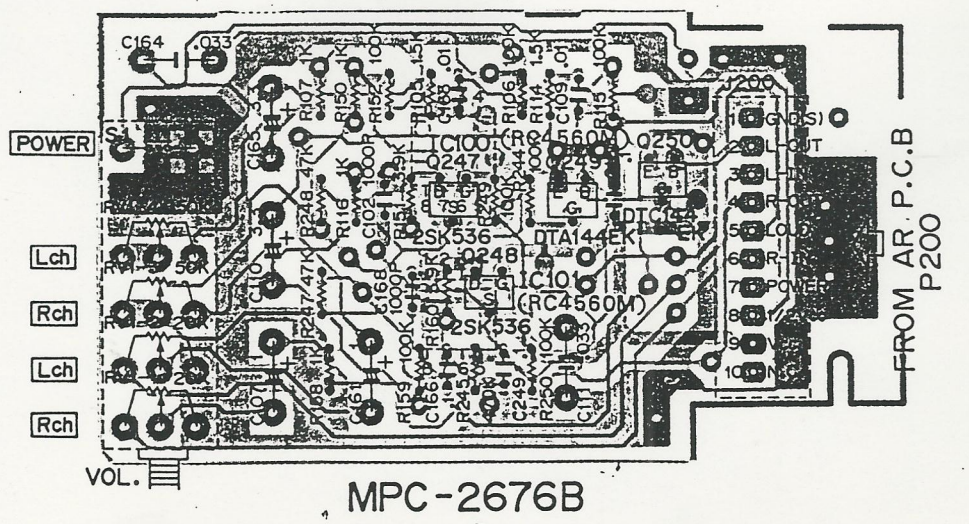

Fig. 12

SCHEMATIC <CD DECK UNIT>

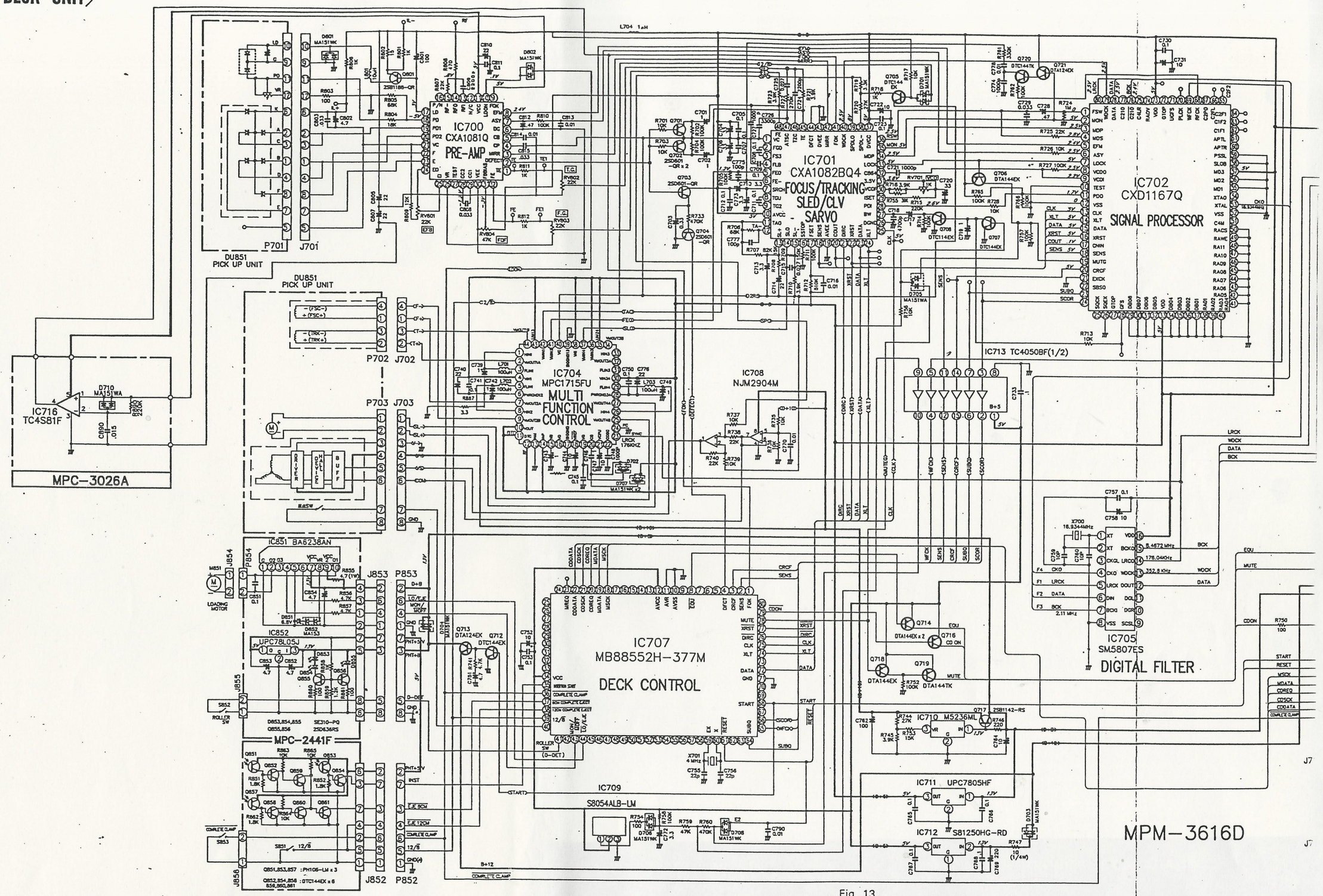

Fig. 13

NOTES: 1. All capacitance in Micro farad, $P=10^{-12}$

2. All resistance in ohm, $K=10^{3}$

3. All inductance in henry, $m=10^{-3}$, $\mu=10^{-6}$

4. DC voltages against the chassis measured with 10M ohms digital volt meter, power supply set at +13.2 VDC, no signal input.

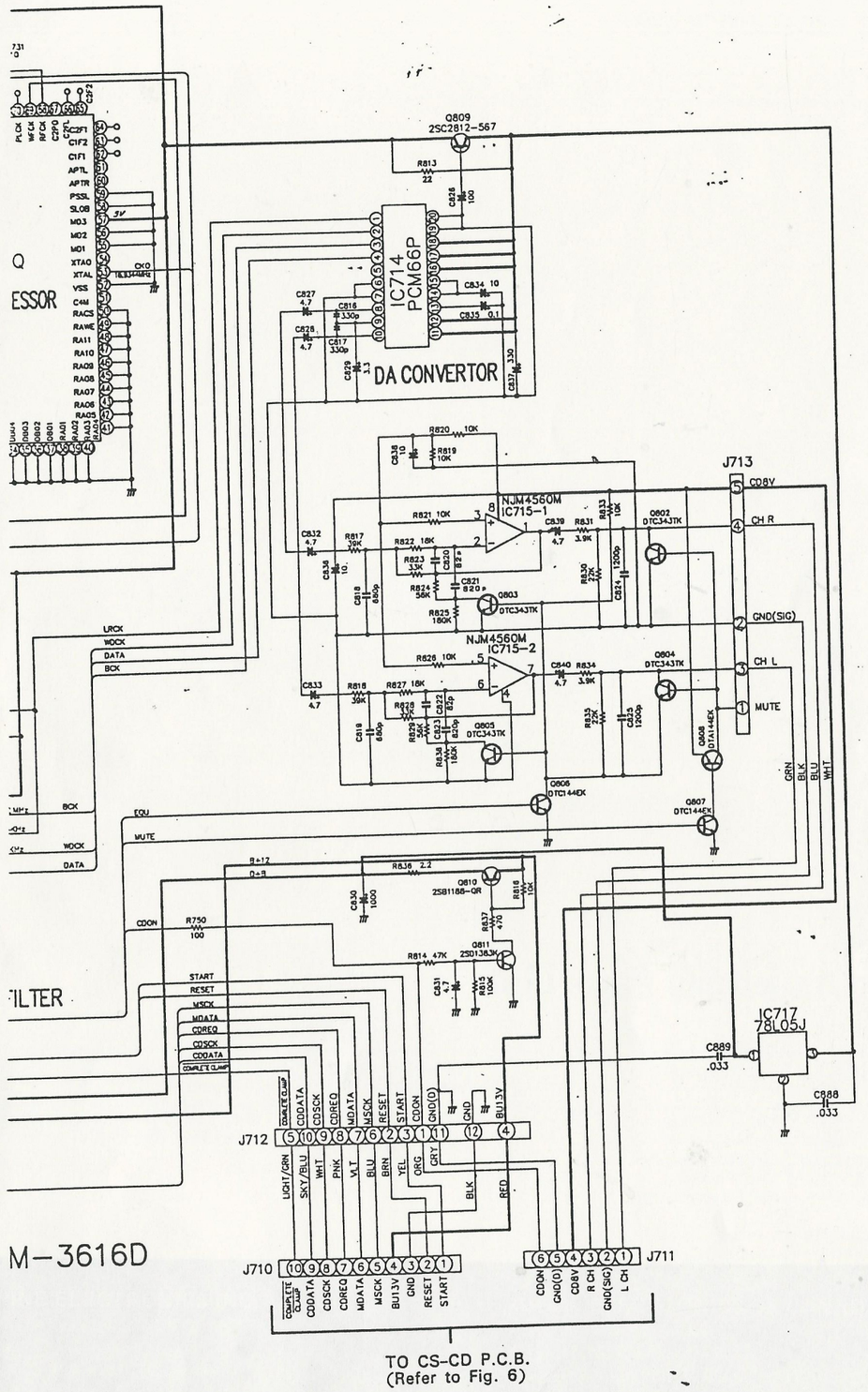

M-3616D

)C, no signal input.

WIRING ON PC BOARDS <CD DECK UNIT>

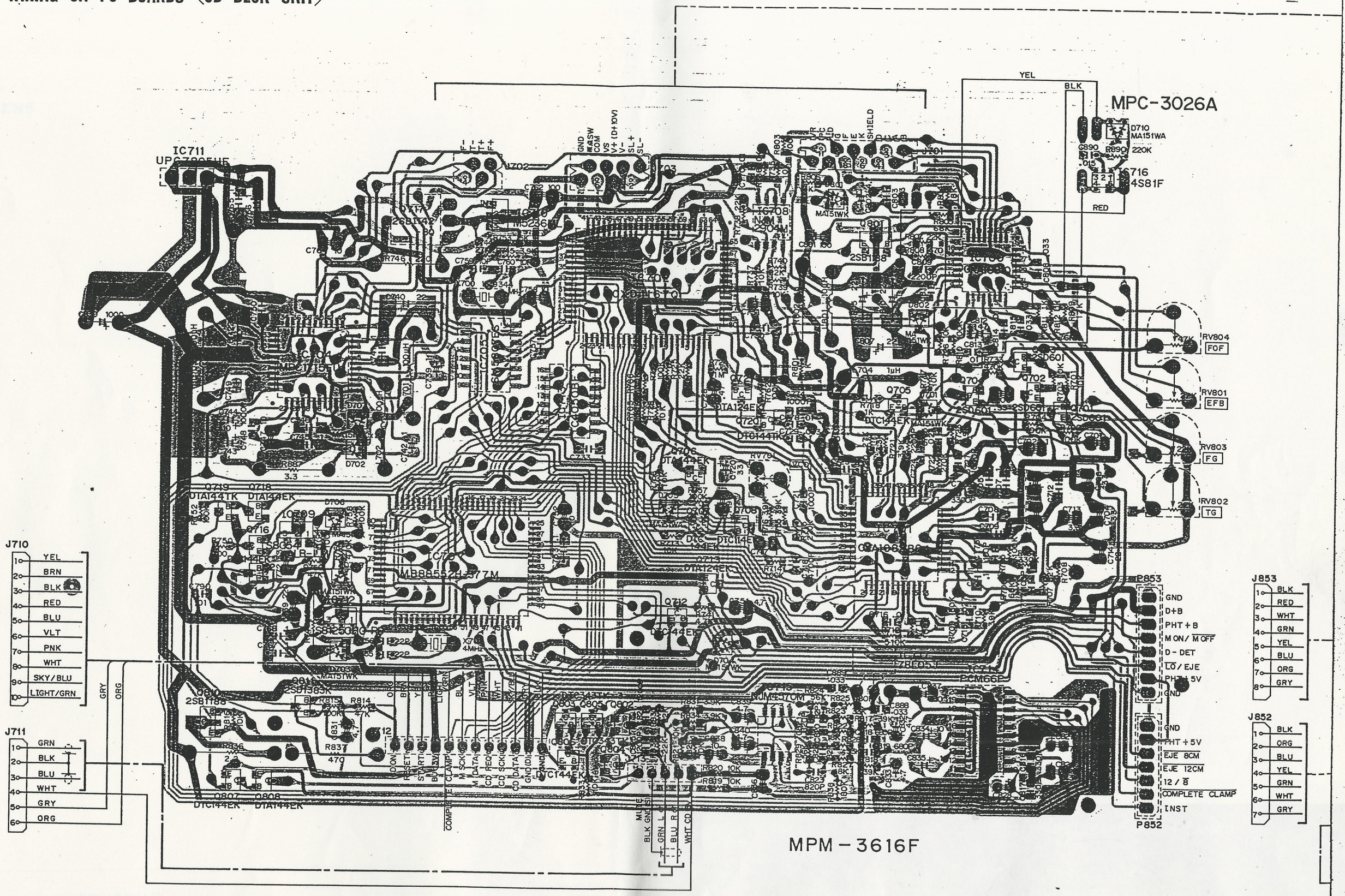

Fig. 14

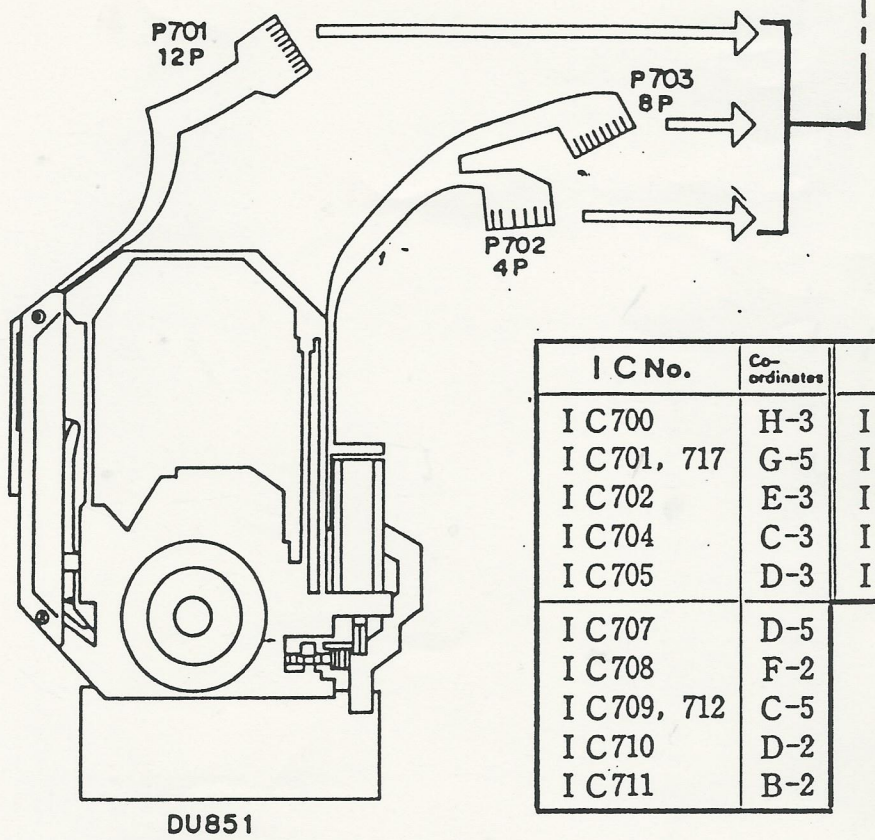

DU851
(PICK UP UNIT)

I C No.	Co-ordinates	I C No.	Co-ordinates
I C700	H-3	I C713	E-4
I C701, 717	G-5	I C714	H-6
I C702	E-3	I C715	F-6
I C704	C-3	I C716	I-2
I C705	D-3	I C851, 852	M-4
I C707	D-5		
I C708	F-2		
I C709, 712	C-5		
I C710	D-2		
I C711	B-2		

Q No.	Co-ordinates	Q No.	Co-ordinates
Q701,702,704	H-4	Q802,803,804 805,806	E-6
Q703	H-3	Q807, 810	B-6
Q705	Q-4	Q808, 811	C-6
Q706,720,721	F-4	Q851	N-6
Q707, 708 712, 713	F-5	Q852	L-5
Q714, 716	C-5	Q853, 854	M-6
Q717	D-2	Q855	L-4
Q718	C-4	Q856	K-4
Q719	B-4	Q857, 858	L-5
Q801	G-2	Q859,860,861	L-6

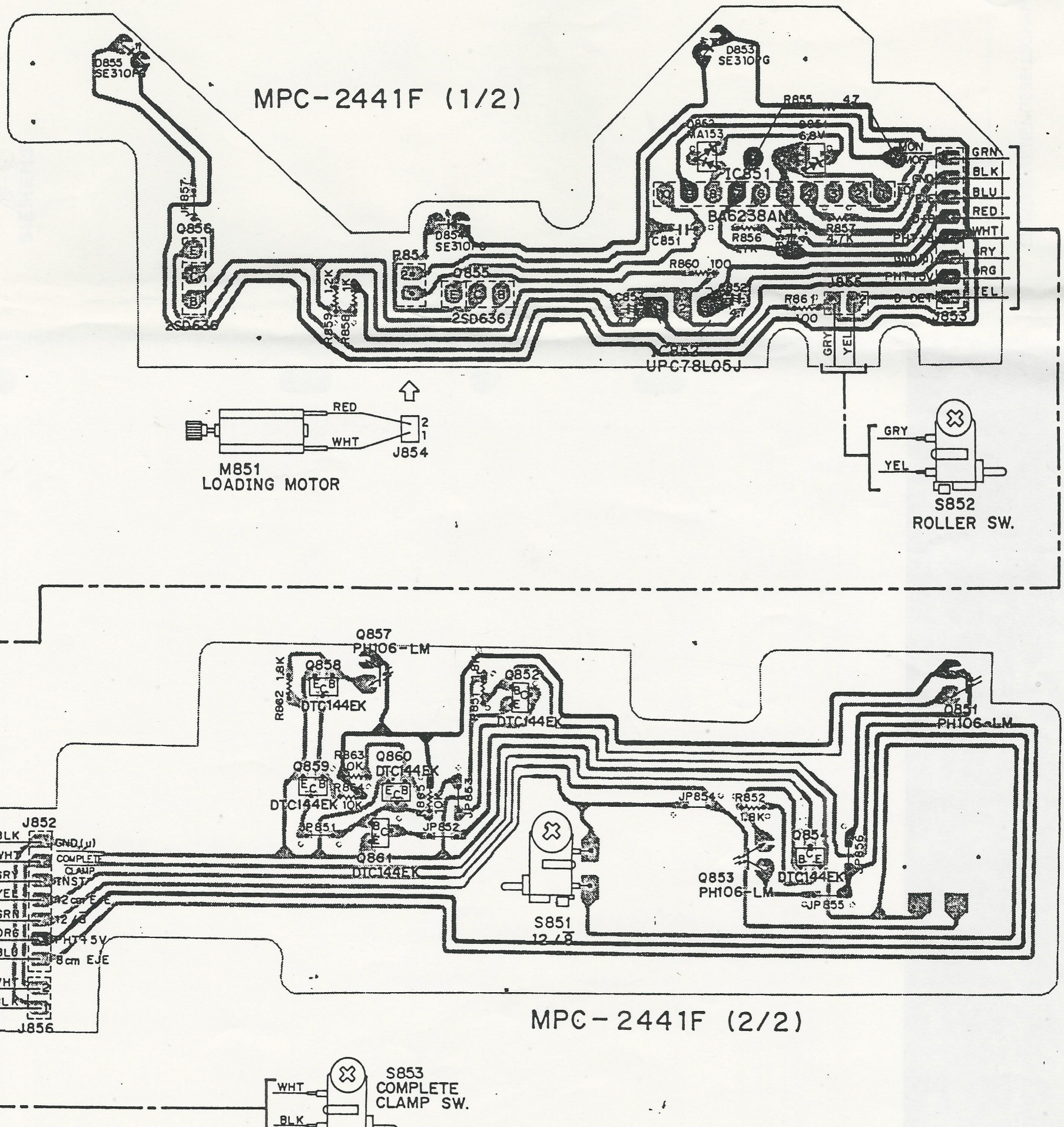

EXPLODED VIEW <CS DECK UNIT> MDK-76-06A/S

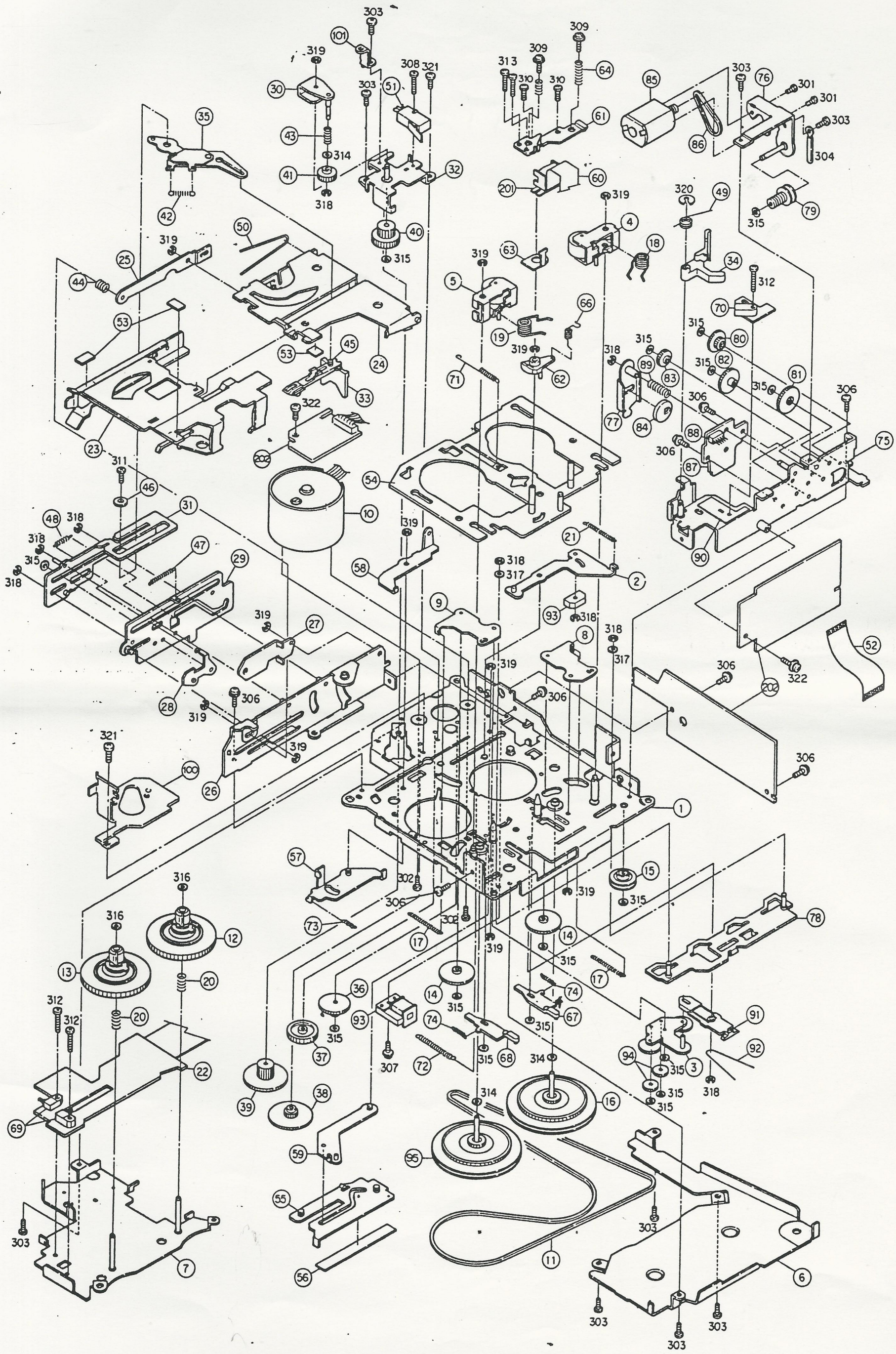

Fig. 15

NOTE: Printed circuit board does not include component parts to be mounted.

SCHEMATIC <CS DECK UNIT>

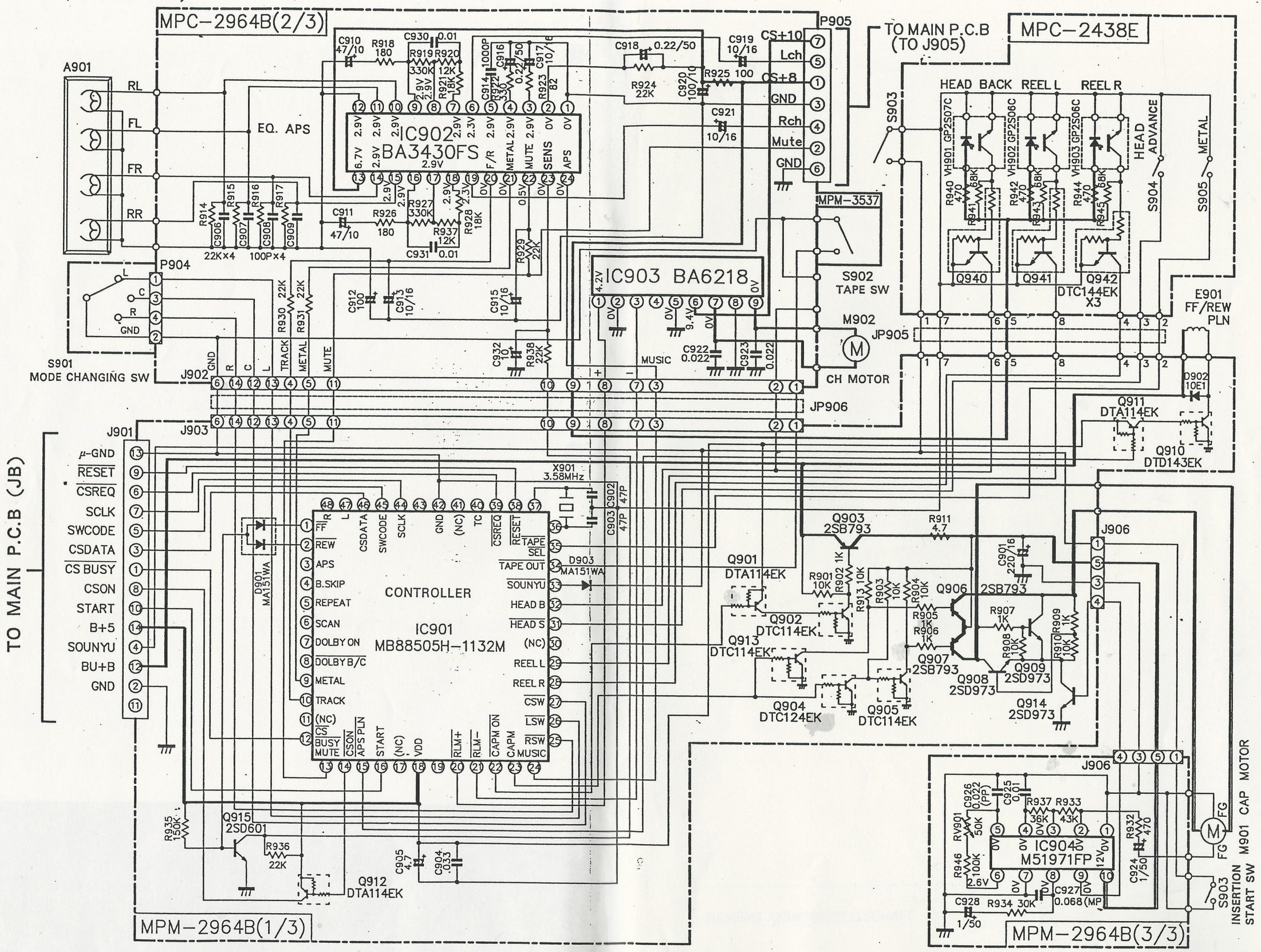

Fig. 16

WIRING ON PC BOARD <CASSETTE DECK UNIT>

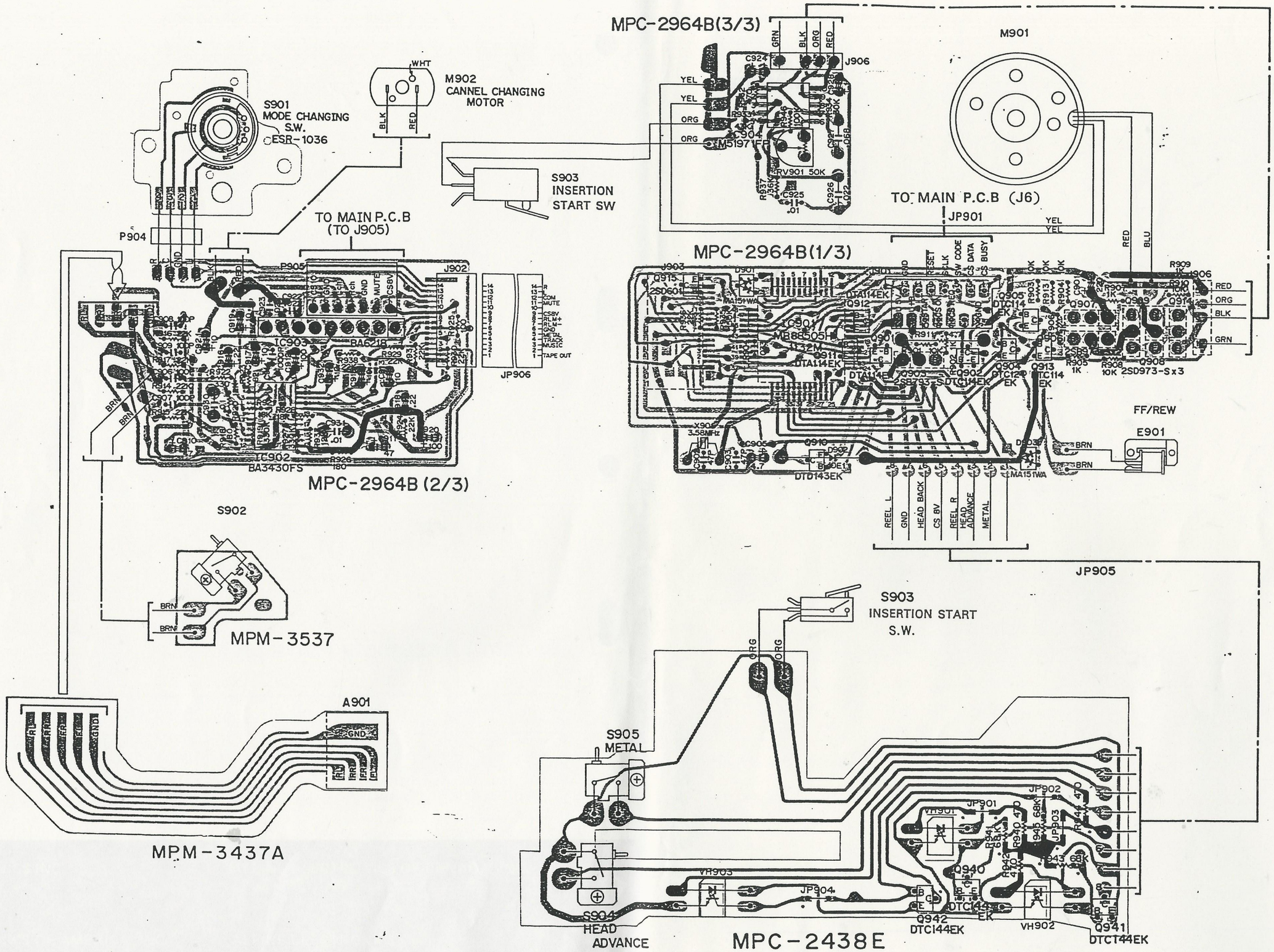

I C No.	Co-ordinates
I C901	F-3
I C902	C-4
I C903	C-3
I C904	F-2

Q No.	Co-ordinates
Q901,902,903	G-3
Q904,905,906 907,909,913	H-3
Q908, 914	I-3
Q910	F-4
Q911, 912	G-3
Q915	F-3
Q940	G-6
Q941	H-7
Q942	G-7

Fig. 17

EXPLANATION ON IC TERMINALS

IC 2, 3, 4, 5, 6, 7, 16, 17, 18, 100, 101
(RC4560M)

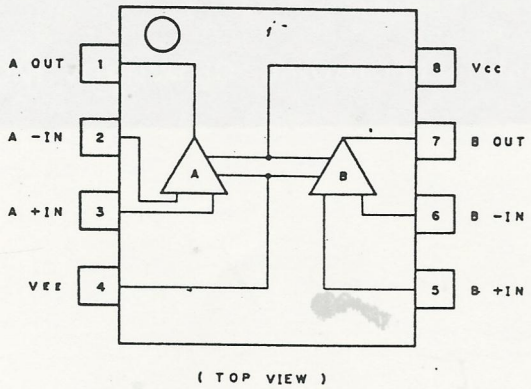

Fig. 18

IC11 (BR93CS46F)

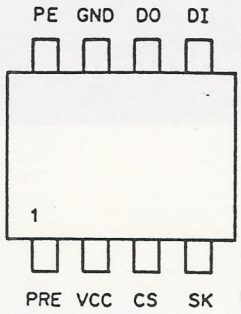

Fig. 20

Terminal Name	Input /Output	Contents
VCC	——	VCC (5V ±10%)
GND	——	GND
CS	INPUT	Chip Select
SK	INPUT	Serial Data Clock
DI	INPUT	OP code, Address and Serial Data
DO	OUTPUT	Serial Data, READY/$\overline{\text{BUSY}}$ state
PE	INPUT	Program Enable (Open: pill up)
PRE	INPUT	Protect Register Enable (Open: pull down)

IC15 (TC9222F)

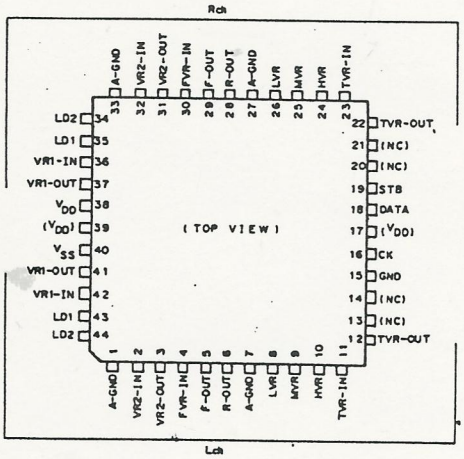

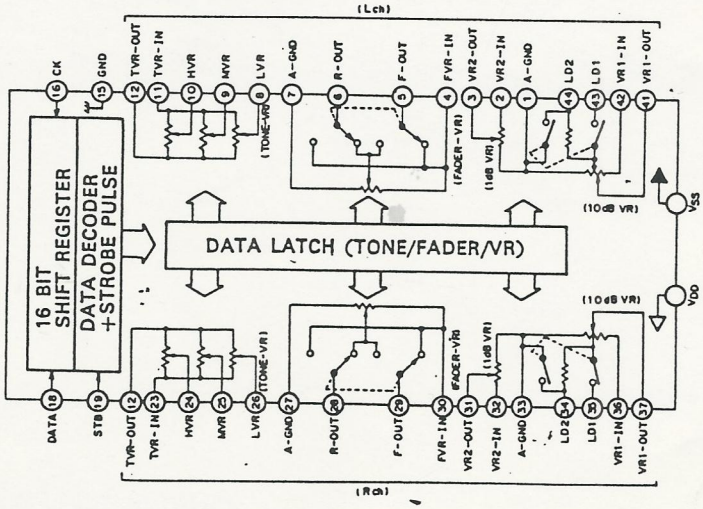

Fig. 20

IC300, 301 (TB2104F)

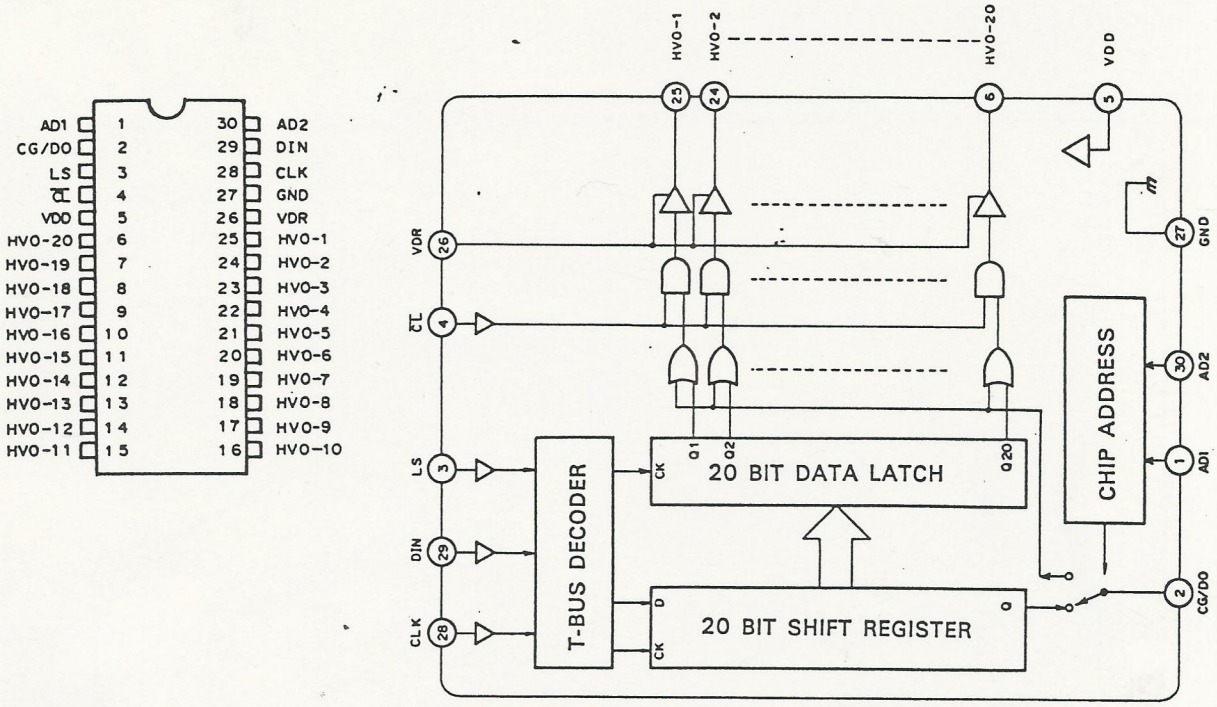

Fig. 21

IC500 (CXA1332M)

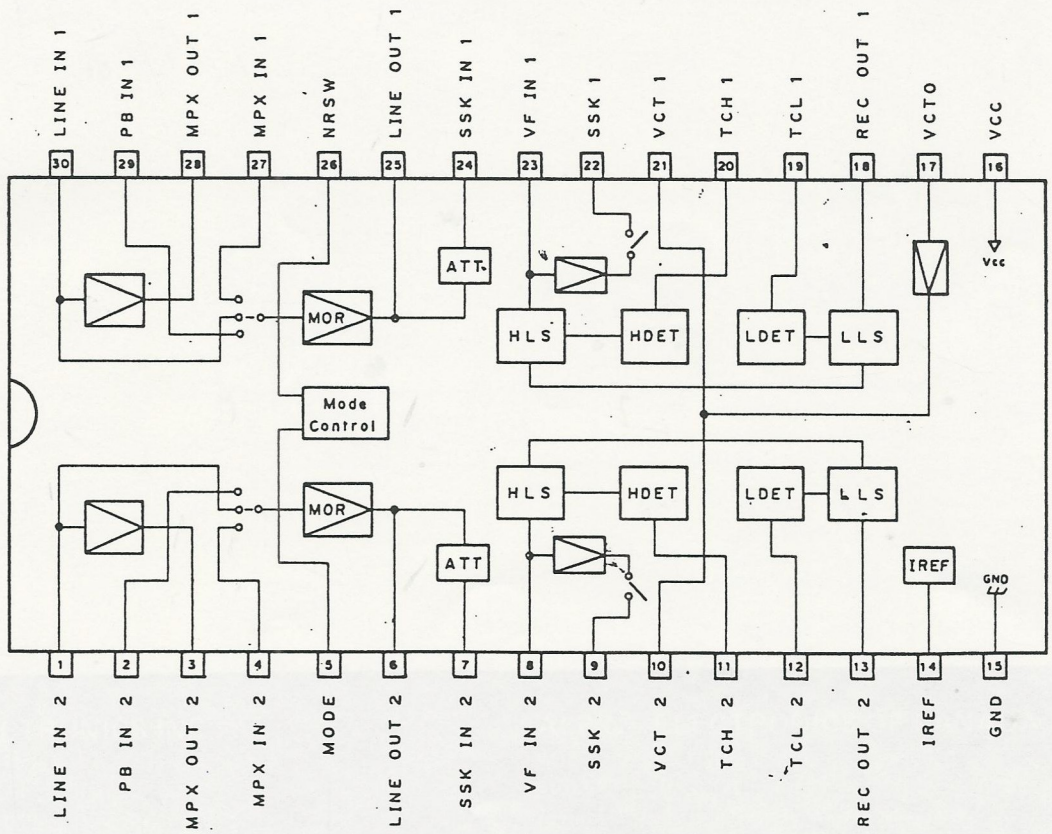

Fig. 22

DOLBY NR LEVEL ALIGNMENT

NOTES: 1. Always use the test tape (MTT–150) for alignment.
2. In alignment of Dolby N.R. circuit, only gain adjustment is required.
3. Make sure that Dolby level falls with in the Dolby standards, when parts in the head or Dolby N.R. circuit being exchanged.
4. Always use the parts listed in the parts list for Dolby circuit.

(1) Connections

a. VTVM·····Hot side: TP1 or TP2 Cold side: chassis (Refer to Fig. 24)

b. Test tape·····MTT–150 (400 Hz. 0 dB full track recording)

c. Power supply·····13.2 VDC

d. Dolby N.R. (DD) switch····OFF

(2) Alignments (Refer to Fig. 24 for ADJUSTMENT POINTS)

STEP	ADJUSTMENT POINT	PROCEDURE
1	①	Adjust to get 388mV (±1dB) output of left channel with a volt meter
2	②	Adjust to get 388mV (±1dB) output of right channel with a volt meter
3	———	Make sure that the output of left channel is equal to that of right channel, by using a volt meter

NOTE: Adjust to get equal output of right and left channels in either track.

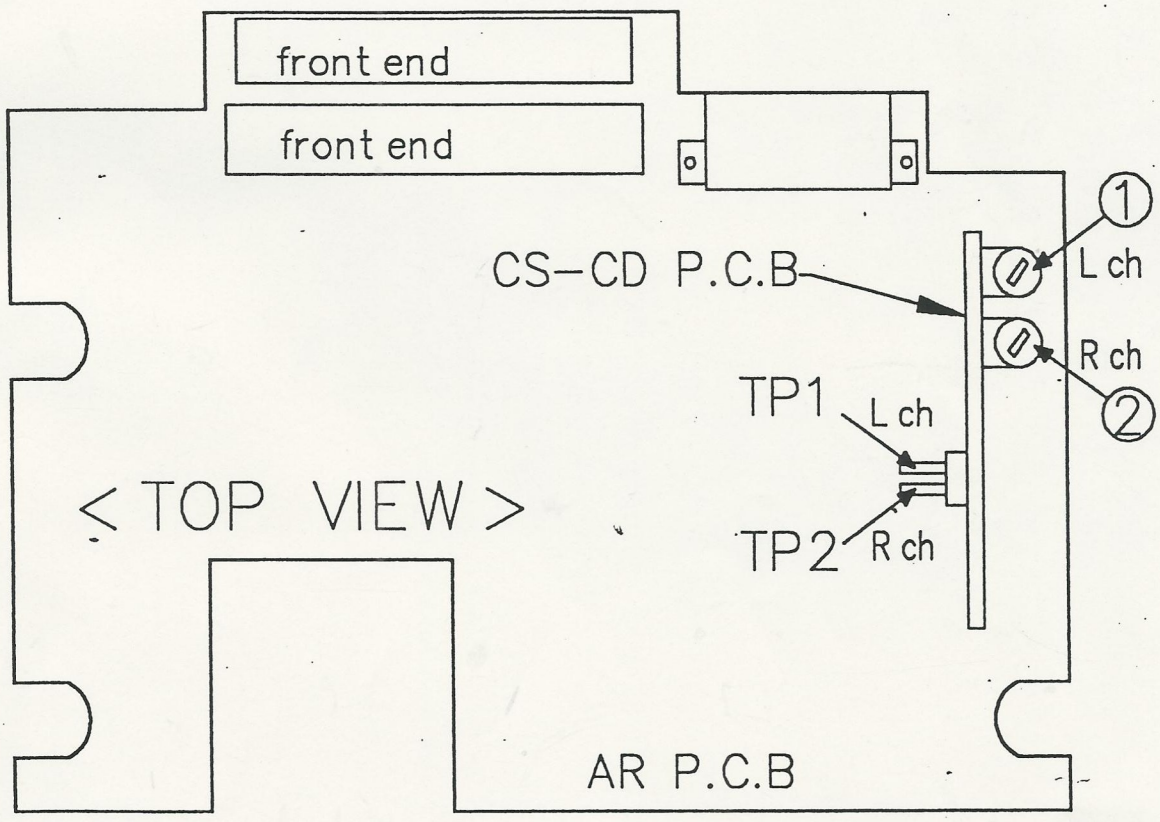

Fig. 23

EXPLODED VIEW <CD DECK UNIT> (MDA-16-17/S) (MDA-16-18/S)

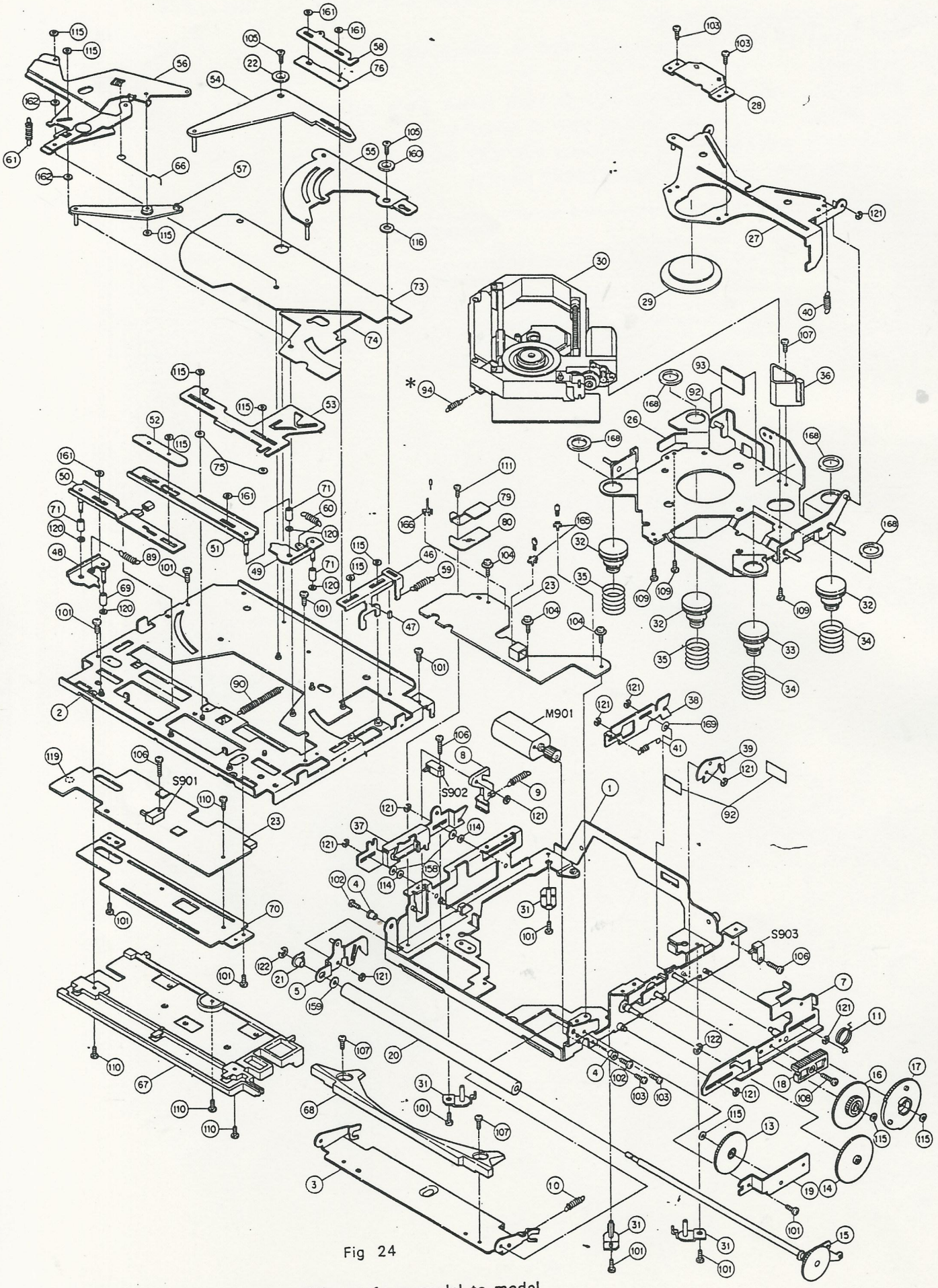

Fig 24

NOTE : ＊-marked parts are different from model to model.

REPLACEMENT PARTS LIST

Note: Main replacement parts are marked O in the remarks column.

Symbol. No.	Stock No.	Parts name	Description Chip: (C)	Remark
CAPACITORS			Unit: μF, P = pF, F = F	
C1	RN-ECE-M470V10-10	Electrolytic	47 10 V	
C2,4	RN-ECE-MR10V50-2	Electrolytic	.1 50 V	
C3,5,24	RN-ECE-M1R0V50-2	Electrolytic	1 50 V	
C6	RN-ECE-M4R7V25-32	Electrolytic	4.7 25 V	
C7,8,68,70,71 73,78,81,91 103,131,134 135,137,209 210,212	RN-ECK-C2B103KYHPB/Y	Ceramic	.01 50 V (C)	
C9,53	RN-ECE-M101V16-903	Electrolytic	100 16 V	
C10,33,49,50 51,52,140 201,204,205 206,207,208	RN-ECE-M100V16-903	Electrolytic	10 16 V	
C11,508	RN-ECE-M2R2V50-7	Electrolytic	2.2 50 V	
C13,42	RN-ECE-M470V10-10	Electrolytic	47 10 V	
C28,67,83,85 88,98,99,104 105,160,166 174,249,250 251,253,501	RN-ECK-C2F104ZYEPB/Y	Ceramic	.1 25 V (C)	
C32	RN-ECE-M221V10-903	Electrolytic	220 10 V	
C34,35,45,46 132,133,141 142,143,144 202,203	RN-ECE-M4R7V25-903	Electrolytic	4.7 25 V	
C36,37	RN-ECE-M3R3V50-903/TT	Electrolytic	3.3 50 V	
C38	RN-ECE-M331V35-610	Electrolytic	330 35 V	
C39,40	RN-ECH-R154J50-12	M.P.	.15 50 V	
C41,43,136	RN-ECE-M101V10-901	Electrolytic	100 10 V	
C44	RN-ECE-M471V16-610	Electrolytic	470 16 V	
C47	RN-ECE-M102V16-301	Electrolytic	1000 16 V	
C55,94,95,228 258,259	RN-ECK-C2B223KYHPB/Y	Ceramic	.022 50 V (C)	
C56	RN-ECC-C2CH150JYHPB/Y	Ceramic	15 p 50 V (C)	
C57,60	RN-ECK-C2B103KYHPB/Y	Ceramic	.01 50 V (C)	
C58,62,65	RN-ECK-C2B102KYHPB/Y	Ceramic	1000p 50 V (C)	
C59	RN-ECK-C2B103KYHPB/Y	Ceramic	.01 50 V (C)	
C61	RN-ECK-C2B681KYHPB/Y	Ceramic	680 p 50 V (C)	
C64	RN-ECC-C2CH150JYHPB/Y	Ceramic	15 p 50 V (C)	
C66	RN-ECF-R392V50-JZ	Mylar	3900p 50 V	
C69	RN-ECF-R104J50-11	Mylar	.1 50 V	
C72,100,101 106,107,108 109,226,235 236,237,238 239,240,290	RN-ECK-C2B102KYHPB/Y	Ceramic	1000p 50 V (C)	
C82,84	RN-ECC-C2CH220JYHPB/Y	Ceramic	22 p 50 V (C)	
C86,87	RN-ECC-C2SL470JYHPB/Y	Ceramic	47 p 50 V (C)	
C89,90	RN-ECK-C2B153KYHPB/Y	Ceramic	.015 50 V (C)	
C92,93	RN-ECK-C2B332KYHPB/Y	Ceramic	3300p 50 V (C)	
C96	RN-ECK-C2F473ZYEPB/Y	Ceramic	.047 25 V (C)	
C102,168	RN-ECK-C2B102KYHPB/Y	Ceramic	1000p 50 V (C)	
C107,161,511 512,513,524	RN-ECE-M1R0V50-901	Electrolytic	1 50 V	
C109,116,117 118,119,120 121,163,252 254,255,262 263,264,271 275,291,299	RN-ECK-C2B103KYHPB/Y	Ceramic	.01 50 V (C)	
C110,165	RN-ECE-M3R3V50-4	Electrolytic	3.3 50 V	
C111,164	RN-ECH-R333J50-11/TT	M.P.	.033 50 V	
C227	RN-ECC-C2CH100JYHPB/Y	Ceramic	10 p 50 V (C)	
C256,257	RN-ECK-C2B393KYHPC/Y	Ceramic	.039 50 V (C)	
C280	RN-ECE-M1R0V50-609/TT	Electrolytic	1 50 V	
C292	RN-ECE-M470V10-903	Electrolytic	47 10 V	
C301,302,307 309,316	RN-ECK-C2F104ZYHPA/Y	Ceramic	.1 50 V (C)	
C303,304,305 306	RN-ECC-C2CH101JYHPB/Y	Ceramic	100 p 50 V (C)	
C308,310,311 312,313,502 504	RN-ECK-C2B103KYHPB/Y	Ceramic	.01 50 V (C)	
C313,314	RN-ECC-C2CH300JYHPB/Y	Ceramic	30 p 50 V (C)	
C350,351	RN-ECC-C2CH180JYHPB/Y	Ceramic	18 p 50 V (C)	
C503,505,506 518	RN-ECE-M100V16-901/TT	Electrolytic	10 16 V	
C507	RN-ECE-M101V16-616	Electrolytic	100 16 V	
C509	RN-ECE-M4R7V25-606	Electrolytic	4.7 25 V	
C510	RN-ECE-M4R7V25-901	Electrolytic	4.7 25 V	
C514,515,520 521,530,531	RN-ECF-R222V50-JC	Mylar	2200p 50 V	
C516,517,522 523	RN-ECE-MR33V50-5	Electrolytic	.33 50 V	
C519	RN-ECE-M470V16-11	Electrolytic	47 16 V	
C532,533	RN-ECE-MR22V50-4	Electrolytic	.22 50 V	
C552,553	RN-ECK-CB1C224K-4/TY	Ceramic	0 p (C)	
RESISTORS			Unit: ohm, K = kohm	
R2,9	RN-ERG-12B103JR-1/Y	Metallic	10 K 5% 1/10W (C)	
R3	RN-ERG-12B684JR-1/Y	Metallic	680K 5% 1/10W (C)	
R4,125	RN-ERG-12B100JR-1/Y	Metallic	10 5% 1/10W (C)	
R5	RN-ERG-12B221JR-1/Y	Metallic	220 5% 1/10W (C)	
R6,11	RN-ERD-AC122J-11	Carbon	1.2K 5% 1/8W	
R7	RN-ERG-12B224JR-1/Y	Metallic	220K 5% 1/10W (C)	
R8	RN-ERG-12B272JR-1/Y	Metallic	2.7K 5% 1/10W (C)	
R10	RN-ERG-12B102JR-1/Y	Metallic	1 K 5% 1/10W (C)	

Symbol. No.	Stock No.	Parts name	Description Chip:(C)	Remark
R12	RN-ERG-I2B183JR-1/Y	Metallic	18 K 5% 1/10W (C)	
R13	RN-ERG-I2B470JR-1/Y	Metallic	47 5% 1/10W (C)	
R14,67,68,107 116,150,158 206,382,513	RN-ERG-I2B102JR-1/Y	Metallic	1 K 5% 1/10W (C)	
R16,39,40,41 42,64,65,66 69,76,77,126 218,247,248 275,293,311 317	RN-ERG-I2B473JR-1/Y	Metallic	47 K 5% 1/10W (C)	
R17,81	RN-ERG-I2B331JR-1/Y	Metallic	330 5% 1/10W (C)	
R19,87,204	RN-ERD-AC122J-11	Carbon	1.2K 5% 1/8W	
R20,62,63,105 114	RN-ERG-I2B152JR-1/Y	Metallic	1.5K 5% 1/10W (C)	
R21,35,43,58 59,80,82,85 86,89,92,108 109,110,111 205,208,215	RN-ERG-I2B103JR-1/Y	Metallic	10 K 5% 1/10W (C)	
R22	RN-ERG-I2B182JR-1/Y	Metallic	1.8K 5% 1/10W (C)	
R23,212,501	RN-ERG-I2B151JR-1/Y	Metallic	150 5% 1/10W (C)	
R24,202,211 508,509	RN-ERG-I2B332JR-1/Y	Metallic	3.3K 5% 1/10W (C)	
R27,90,225 510,516,519	RN-ERG-I2B273JR-1/Y	Metallic	27 K 5% 1/10W (C)	
R31,32,33,34 47,203,209 224,272,505 900,901	RN-ERG-I2B472JR-1/Y	Metallic	4.7K 5% 1/10W (C)	
R44,45,46,106 115,152,159 164,165,166 169,235,236 237,238,239	RN-ERG-I2B104JR-1/Y	Metallic	100K 5% 1/10W (C)	
R49,50	RN-ERG-AG270J-1/TM	Metallic	27 5% 1W	
R51,54	RN-ERG-I2B393JR-1/Y	Metallic	39 K 5% 1/10W (C)	
R52,53	RN-ERG-I2B822JR-1/Y	Metallic	8.2K 5% 1/10W (C)	
R60,61	RN-ERG-I2B153JR-1/Y	Metallic	15 K 5% 1/10W (C)	
R70,71,72,73	RN-ERG-I2B821JR-1/Y	Metallic	820 5% 1/10W (C)	
R74,75,83,84 207	RN-ERG-I2B272JR-1/Y	Metallic	2.7K 5% 1/10W (C)	
R78,79	RN-ERG-I2B2R2JR-1/Y	Metallic	2.2 5% 1/10W (C)	
R88,91,95,307 309,312,318 380,383	RN-ERG-I2B222JR-1/Y	Metallic	2.2K 5% 1/10W (C)	
R94	RN-ERD-AC220J-11	Carbon	22 5% 1/8W	
R97,98,99,100 515	RN-ERG-I2B223JR-1/Y	Metallic	22 K 5% 1/10W (C)	
R101,122,124	RN-ERG-I2B221JR-1/Y	Metallic	220 5% 1/10W (C)	
R102,103	RN-ERG-AF470J-1	Metallic	47 5% 1/2W	
R151,160	RN-ERG-I2B392JR-1/Y	Metallic	3.9K 5% 1/10W (C)	

Symbol. No.	Stock No.	Parts name	Description Chip:(C)	Remark
R201	RN-ERG-AG2R2J-1	Metallic	2.2 5% 1W	
R210,213,214	RN-ERG-I2B681JR-1/Y	Metallic	680 5% 1/10W (C)	
R240,244,249 250	RN-ERG-I2B104JR-1/Y	Metallic	100K 5% 1/10W (C)	
R245	RN-ERG-I2B474JR-1/Y	Metallic	470K 5% 1/10W (C)	
R270,271,273 308,381,400 502,503,506 507	RN-ERG-I2B103JR-1/Y	Metallic	10 K 5% 1/10W (C)	
R296,297,298 299,362,364 365,368,370	RN-ERG-IC221J-1/TY	Metallic	220 5% 1/8W (C)	
R301,302,303 304,305	RN-ERG-I2B104JR-1/Y	Metallic	100K 5% 1/10W (C)	
R306	RN-ERG-I2B124JR-1/Y	Metallic	120K 5% 1/10W (C)	
R310	RN-ERG-I2B334JR-1/Y	Metallic	330K 5% 1/10W (C)	
R319,320,352 354,356	RN-ERG-IC151J-1/TY	Metallic	150 5% 1/8W (C)	
R321,323,326 327,350,351 358,359	RN-ERG-IC121J-1/TY	Metallic	120 5% 1/8W (C)	
R322,324,325 328,331,333 335,337	RN-ERG-IC101J-1/TY	Metallic	100 5% 1/8W (C)	
R329,338,339 340,341,342 343,344,345 346,347,348 349,376	RN-ERG-IC271J-1/TY	Metallic	270 5% 1/8W (C)	
R330,332,334 336	RN-ERG-IC820J-1/TY	Metallic	82 5% 1/8W (C)	
R353,355,357 363,369,371	RN-ERG-IC181J-1/TY	Metallic	180 5% 1/8W (C)	
R360	RN-ERG-I2B151JR-1/Y	Metallic	150 5% 1/10W (C)	
R366,367,373	RN-ERG-IC391J-1/TY	Metallic	390 5% 1/8W (C)	
R372	RN-ERG-IC331J-1/TY	Metallic	330 5% 1/8W (C)	
R374,375	RN-ERG-IC561J-1/TY	Metallic	560 5% 1/8W (C)	
R511,517	RN-ERG-I2B243JR-1/Y	Metallic	24 K 5% 1/10W (C)	
R512,518	RN-ERG-I2B561JR-1/Y	Metallic	560 5% 1/10W (C)	
R514	RN-ERG-I2B470JR-1/Y	Metallic	47 5% 1/10W (C)	
RV1,S1	RN-ERV-1P4-1014	Variable	20Kx2,50Kx2	○
RV101	RN-ERV-ON1-229	Variable	22K	
RV501,502	RN-ERV-ON1-270	Variable	22K,ASC,DOLBY,N	
SEMICONDUCTORS				
D1,2,3,4	RN-EDT-RD180BSB	Zener diode	18V	○
D5	RN-EDT-RD3R0BSB/TM	Zener diode	3V	○
D6	RN-EDT-RD100BSC/TM	Zener diode	10V	○
D7	RN-EDT-RD9R1BSC	Zener diode	9.1V	○
D8,11,20,21 27,30,31,32 33,34,203	RN-EDS-MA151WK/TY	Silicon diode	Mark:MT (C)	○

Symbol. No.	Stock No.	Parts name	Description Chip:(C)	Remark
301-309 311-315	RN-EDS-MA151WK/TY	Silicon diode	Mark:MT (C)	O
D9,202	RN-EDT-RD5R1BSB	Zener diode	5.1V	O
D12,13,15,16 28,100	RN-EDS-1SS254-52/TM	Silicon diode		O
D14,17	RN-EDI-1SV128/TY	Pin diode	Mark:BB (C)	O
D40,204	RN-EDS-MA151WA/TY	Silicon diode	Mark:MN (C)	O
D200	RN-EDS-1SR139-100	Silicon diode		O
D320	RN-EDP-MBG4868K-R-335	LED	GRN 25mA,4V	O
D321-328,348 349,360-366 370	RN-EDP-SEL4427EA	LED	GRN 25mA,4V	O
D329,338,347	RN-EDP-MPY4868K-R-335	LED	YEL 30mA,4V	O
D330-337	RN-EDP-MBG4868K/TT	LED	GRN 25mA,4V	O
D339-346	RN-EDP-MAY4868K/TT	LED	YEL 30mA,4V	O
D350-357,362	RN-EDP-SEL6427EP/TT	LED	GRN 25mA,4V	O
D367	RN-EDP-MAY4868K-MR-335	LED	YEL 30mA,4V	O
D368,371	RN-EDP-BR4868K	LED	RED 50mA,4V	O
D380	RN-EDT-RD5R1MB2/TY	Zener diode	Mark:512,5.1V (C)	O
D501	RN-EDT-RD8R2MB2/TY	Zener diode	8.2V	O
IC2,3,4,5,6,7 16,17	RN-EIC-RC2068MD/TY	Linear-monolithic IC	OP AMP	O
IC8	RN-EIC-PST529F	Linear-monolithic IC	SYSTEM RESET	O
IC10	RN-EIM-UPD17005-901	Digital-monolithic IC		O
IC11	RN-EID-BR93CS46F/TY	Digital-monolithic IC	DATA	O
IC13,14	RN-EIC-S81250HG-RD/TY	Linear-monolithic IC	V.REG.	O
IC15	RN-EID-TC9222F	Digital-monolithic IC	E.VOL.	O
IC18	RN-EIC-XRA10358F/TY	Linear-monolithic IC		O
IC22	RN-EIC-MB43477P	Linear-monolithic IC	DIVERSITY M-IC	O
IC100,101	RN-EIC-RC4560M/TY	Linear-monolithic IC		O
IC300,301	RN-EID-TB2104F	Digital-monolithic IC	VFD DRIVER	O
IC302	RN-EIM-UPD75004-902	Digital-monolithic IC		O
IC500	RN-EIC-CXA1332M/TY	Linear-monolithic IC	DOLBY	O
Q1,21,302,312 317,320,323 327,328,331 334,338,339 340	RN-EVS-DTC114EK/TY	Silicon transistor	Mark:24 (C)	O
Q2,247,248	RN-EVF-2SK536/TY	FET	Mark:BJ (C)	O
Q4,7,8,9,15 16,17,23,24 200,206,250 502,506,507	RN-EVS-DTC144EK/TY	Silicon transistor	Mark:26 (C)	O
Q11,303,314 315,318,321 324,329,330 332,333,336 337	RN-EVS-DTA143EK/TY	Silicon transistor	Mark:13 (C)	O
Q12,13,25,316 319,322,326	RN-EVS-2SA1520/TY	Silicon transistor	Mark:NL (C)	O
Q22,304,307	RN-EVS-DTA114EK/TY	Silicon transistor	Mark:14 (C)	O

Symbol. No.	Stock No.	Parts name	Description Chip:(C)	Remark
308,310	RN-EVS-DTA114EK/TY	Silicon transistor	Mark:14 (C)	O
Q29,44	RN-EVS-2SD601-QRS/TY	Silicon transistor	Mark:YQ,YR,YS (C)	O
Q30,42	RN-EVS-2SD1913-QRS	Silicon transistor		O
Q31,43,202 341	RN-EVS-2SA1213-OY/TY	Silicon transistor		O
Q32,33,34,35 36,37,38,39 40	RN-EVS-DTA115TK/TY	Silicon transistor		O
Q41	RN-EVS-2SA1179-567/TY	Silicon transistor	Mark:M5,M6,M7 (C)	O
Q45,249,503	RN-EVS-DTA144EK/TY	Silicon transistor	Mark:16 (C)	O
Q201	RN-EVS-2SC2873-Y/TY	Silicon transistor	Mark:MO (C)	O
Q203,208	RN-EVS-2SC3142-345/TY	Silicon transistor	Mark:J-3,J-4,J-5 (C)	O
Q205,260,301 305,306,309 311,313,335	RN-EVS-DTC144EK/TY	Silicon transistor	Mark:26 (C)	O
Q501	RN-EVS-2SD1225M-QR	Silicon transistor		O
Q504,505	RN-EVS-DTC343TK/TY	Silicon transistor	Mark:H03 (C)	O
MISCELLANEOUS ELECTRICAL				
J1	RN-EJA-1003	Antenna receptacle	MAIN	
J2	RN-EJA-1019	Antenna receptacle	SUB	
J6	RN-EJU-4030-FBN14	Connector	14P,FOR DECK	
J10	RN-EWI-2292	Lead assembly	BLK	
J200,501	RN-EJU-4033-FBC10	Connector	10P	
J201	RN-EJU-9041-FBW10	Connector	10P,BASS/TRE	
J301	RN-EJU-4033-FBC08	Connector	8P	
J302	RN-EJU-4033-FBC10	Connector	10P	
J500	RN-EJU-4033-FBC12	Connector	12P	
J905	RN-EWI-1762	Lead assembly	8P-7P	
JP907	RN-EWJ-1786	Lead assembly	14P:FOR DECK CONNECTION	
L1,2,3,5	RN-ELH-D4R7-1001/TY	Choke	4.7uH	
L4,16	RN-ELH-DR18-1001/TY	Choke	.18uH	
L6	RN-ELT-1043	Trap coil	18mH	
L7,11,14	RN-ELH-DE6R8-1/TY	Choke	6.8uH	
L9	RN-ELL-335	Choke	2mH	
L10	RN-ELH-C330-LAL02/TM	Choke	33uH	
L12,13,15	RN-ELH-D6R8-1004/TY	Choke	6.8uH	
L500,501	RN-ELH-D330-1001/TY	Choke	33uH	
P4	RN-EJU-2010-MBW15	Connector	15P	
P5	RN-EJU-4034-MAC06	Connector	6P	
P200,501	RN-EJU-4034-MAC10	Connector	10P	
P201	RN-EJU-9064-MBW10	Connector	10P,BASS/TRE	
P301	RN-EJU-4038-MAC08	Connector	8P	
P302	RN-EJU-4038-MAC10	Connector	10P	
P500	RN-EJU-4034-MAC12	Connector	12P	
P710	RN-EJU-4009-MBW10	Connector	10P	
P711	RN-EJU-4009-MBW06	Connector	6P	
PL301,302,303	RN-EPM-1570	Lamp assembly	8V,70mA,GRN	O
S8	RN-ESR-1040	Rotary switch	MID	O

Symbol. No.	Stock No.	Parts name	Description Chip:(C)	Remark
S9,10,RV2,3	RN-ESR-1039	Rotary switch	FAD,TRE/BAL,BASS	○
S301-316	RN-ESB-1N1-1015	Push switch		○
TH1	RN-EVT-502-20	Thermistor	5K	
TH2	RN-EVT-TD5-C315DH	Thermistor	15K	
TV1	RN-ETV-1178A	Front end	AM	○
TV2	RN-ETV-1154AZ	Front end	FM	○
UV1	RN-EUV-CE-0713M	Convertor unit	DC/DC	
VI300	RN-EVI-BG840GK	Display	VF	○
X1	RN-EXD-1008	Crystal	4.5M	
X300	RN-EXB-CSA4R19MGCM/TY	Ceramic oscillator	4.19MHz	
X301	RN-EXC-1062	Crystal	32.763KHz	

Illus. No.	Stock No.	Parts name	Description	Q'ty	Remark
MECHANICAL					
501	RN-MTD-1500	Chassis	MAIN	1	
502	RN-MTD-1499	Chassis	CS	1	
503	RN-MTD-1522	Chassis	TOP	1	
504	RN-MTD-1523	Chassis	BOTTOM	1	
*1 505	RN-MKD-1032A	Escutcheon	(only CD-1634)	1	○
*2 505	RN-MKD-1057A	Escutcheon	(oply CD-1636)	1	○
506	RN-MYB-3203	Button	EJECT	2	○
507	RN-MYB-3204	Button	PRESET 1	1	○
508	RN-MYB-3205	Button	PRESET 2	1	○
509	RN-MYB-3206	Button	PRESET 3	1	○
510	RN-MYB-3207	Button	PRESET 4	1	○
511	RN-MYB-3208	Button	PRESET 5	1	○
512	RN-MYB-3209	Button	PRESET 6	1	○
513	RN-MYB-3216	Button	CD	1	○
514	RN-MYB-3217	Button	TAPE	1	○
515	RN-MYB-3218	Button	AM・FM	1	○
517	RN-MYB-3214	Button	TUNE	1	○
518	RN-MYB-3221	Button	SCAN	1	○
519	RN-MYN-1237	Knob	For VOL.	1	○
520	RN-MWS-1068	Washer	For BASS,TRE,MID	1	
521	RN-MCV-1938	Door	DOOR	1	
522	RN-MSI-1120	Pin	For DOOR	1	
523	RN-MSC-237B	Spring	For DOOR	1	
☆525	——	PC board and parts	AR,BASS/TRE P.C.B.	1	——
☆526	——	PC board and parts	VOL,CS P.C.B.	1	——
☆528	——	PC board and parts	PANEL P.C.B.	1	——
530	RN-MHE-2291	Holder	For VOL.	1	
531	RN-MYC-1124	Knob	For BASS,TRE,MID	3	○
532	RN-MIP-1800	Insulater	For BOTTOM	1	
533	RN-MHE-2435	Holder	For CS P.C.B.	1	

Illus. No.	Stock No.	Parts name	Description	Q'ty	Remark
534	RN-MHE-2480	Holder	For DC/DC CONVERTER	1	
535	RN-MSE-2715	Spacer	For TOP	1	
537	RN-MIP-1843	Insulater	For right side	1	
538	RN-MIP-1844	Insulater	For left side	1	
539	RN-MLP-2227	Label	For PANEL	1	
540	RN-MIP-1856	Insulater	For CS	1	
541	RN-MIP-1865A	Insulater	For CS	1	
542	RN-MHE-2431	Holder	For VFD	1	
543	RN-MHE-2432	Holder	For TUNE SW.	1	
544	RN-MSE-2518	Spacer	For VFD	1	
545	RN-MSE-2519	Spacer	For VFD	1	
546	RN-MHE-2433	Holder	Fof AM・FM,CD,TAPE SW.	3	
548	RN-MIP-1822	Insulater	For EFC	1	
549	RN-MSE-1371	Spacer	For FFC	1	
550	RN-MYB-3219	Button	EQ	1	○

Illus. No.	Stock No.	Parts name	Description	Q'ty	Remark
551	RN-MYB-3220	Button	LOUD	1	○
553	RN-MSE-1673	Spacer	For AR P.C.B.	2	
554	RN-MSE-2773	Spacer	For CS P.C.B.	2	
561	RN-MDK-76-06A/S	Cassette deck	DECK UNIT	1	
*1 562	RN-MDA-06-17/S	Disk deck	DISC UNIT(ONLY CD-1634)	1	
*2 562	RN-MDA-06-18/S	Disk deck	DISK UNIT(ONLY CD-1636)	1	
601	F6-SBD-3X6S	Screw	3x6mm	20	
602	F6-SBD-3X4S	Screw	3x4mm	1	
603	RN-MET-1457	Special screw	For PANEL P.C.B.	7	
604	RN-MEN-1059	Special nut	For BASS,TRE,MID	3	
605	RN-MSN-1004	Nut	For VOL.	1	
606	RN-MET-1457	Special screw	For TUNE SW.	1	
607	RN-MET-253	Special screw	FOR 16P CONNECTOR	2	

NOTE:
1. Specifications subject to change without prior notice.
2. It takes long time to supply some parts marked ☆ since we do not always have them in store. In the worst case, we can't supply them for you.
3. ※ marked PC board does not include component parts to be mounted.
4. * 1-marked parts are for model (CD-1634) only.
5. * 2-marked parts are for model (CD-1636) only.

CD DECK UNIT (MDA-06-17/S)
(MDA-06-18/S)

Symbol. No.	Stock No.	Parts name	Description Chip: (C)	Remark
CAPACITORS			Unit: μF, P=pF, F=F	
C701,702,717 719,743	RN-ECE-M1R0V50-13	Electrolytic	1 50 V	
C703	RN-ECE-MR33V50-3	Electrolytic	.33 50 V	
C704,706,720	RN-ECE-M330V10-11	Electrolytic	33 10 V	
C705,708,709 711,712,723 730,733,741 745	RN-ECK-CD1E104M-1/TY	Ceramic	.1 25 V (C)	
C707,750,753 757,765,766 767,768,851	RN-ECK-CD1E104M-1/TY	Ceramic	.1 25 V (C)	
C710,713,772 773,829	RN-ECE-M3R3V50-7	Electrolytic	3.3 50 V	
C714	RN-ECE-M220V10-8	Electrolytic	22 10 V	
C715,725	RN-ECK-C2B273KYHPB/Y	Ceramic	.027 50 V (C)	
C716,770,778 790,813,814	RN-ECK-C2B103KYHPB/Y	Ceramic	.01 50 V (C)	
C718	RN-ECK-C2B472KYHPB/Y	Ceramic	4700p 50 V (C)	
C721,727,748 774	RN-ECK-C2B102KYHPB/Y	Ceramic	1000p 50 V (C)	
C722,731,744 747,752,758 764,836,838	RN-ECE-M100V16-11	Electrolytic	10 16 V	
C724,809	RN-ECK-C2B222KYHPB/Y	Ceramic	2200p 50 V (C)	
C726	RN-ECK-C2B332KYHPB/Y	Ceramic	3300p 50 V (C)	
C728	RN-ECE-MR47V50-13	Electrolytic	.47 50 V	
C729,803,808 815,888,889	RN-ECK-C2B333KYHPB/Y	Ceramic	.033 50 V (C)	
C739,742,749	RN-ECY-M1R0V16-M1	Tantalum	1 16 V	
C740,776,805 807,810	RN-ECY-S220V06-301/TY	Tantalum	22 06 V	
C746	RN-ECK-C1F105ZYBPA/Y	Ceramic	1 50 V	
C751,831	RN-ECE-M4R7V25-11	Electrolytic	4.7 25 V	
C755,756	RN-ECC-C2CH220JYHPB/Y	Ceramic	22 p 50 V (C)	
C759,760	RN-ECC-C2CH100CYHPB/Y	Ceramic	10 p 50 V (C)	
C762,826	RN-ECE-M101V16-19	Electrolytic	100 16 V	
C769	RN-ECE-M221V16-613	Electrolytic	220 16 V	
C775,777	RN-ECK-C2B101KYHPC/Y	Ceramic	100 p 50 V (C)	
C801	RN-ECE-M101V10-902	Electrolytic	100 10 V	
C802	RN-ECY-M4R7V16-M1	Tantalum	4.7 16 V	
C811	RN-ECK-C2F104ZYEPB/Y	Ceramic	.1 25 V (C)	
C812	RN-ECY-MR47V16-M1	Tantalum	.47 16 V	
C816,817	RN-ECC-C2SL331JYHPB/Y	Ceramic	330 p 50 V (C)	
C818,819	RN-ECK-C2B681KYHPB/Y	Ceramic	680 p 50 V (C)	
C820,822	RN-ECC-C2SL820JYHPB/Y	Ceramic	82 p 50 V (C)	
C821,823	RN-ECK-C2B821KYHPB/Y	Ceramic	820 p 50 V (C)	
C824,825	RN-ECK-C2B122KYHPC/Y	Ceramic	1200p 50 V (C)	

Symbol. No.	Stock No.	Parts name	Description Chip: (C)	Remark
C827,828,832 833,839,840	RN-ECE-M4R7V25-901	Electrolytic	4.7 25 V	
C830	RN-ECE-M102V16-51	Electrolytic	1000 16 V	
C834	RN-ECY-M100V16-M1	Tantalum	10 16 V	
C835	RN-ECY-MR10V16-M1	Tantalum	.1 16 V	
C837	RN-ECE-M331V6R-902	Electrolytic	330 6.0V	
C852,853,854	RN-ECE-M4R7V25-42	Electrolytic	4.7 25 V	
C890	RN-ECK-C2B153KYHPB/Y	Ceramic	.015 50 V (C)	
RESISTORS			Unit: ohm, K=kohm	
R701,703,713 717,726,728 756,816,819 820,821,826 833,863,864	RN-ERG-I2B103JR-1/Y	Metallic	10 K 5% 1/10W (C)	
R702,704,705 711,714,727 752,757,758 762,810,815	RN-ERG-I2B104JR-1/Y	Metallic	100K 5% 1/10W (C)	
R706,805	RN-ERG-I2B683JR-1/Y	Metallic	68 K 5% 1/10W (C)	
R707	RN-ERG-I2B823JR-1/Y	Metallic	82 K 5% 1/10W (C)	
R708,753	RN-ERG-I2B153JR-1/Y	Metallic	15 K 5% 1/10W (C)	
R709	RN-ERG-I2B154JR-1/Y	Metallic	150K 5% 1/10W (C)	
R710,716,721 723,831,834	RN-ERG-I2B392JR-1/Y	Metallic	3.9K 5% 1/10W (C)	
R712	RN-ERG-I2B514JR-1/Y	Metallic	510K 5% 1/10W (C)	
R715,890	RN-ERG-I2B224JR-1/Y	Metallic	220K 5% 1/10W (C)	
R718,801,806 811,812,858	RN-ERG-I2B102JR-1/Y	Metallic	1 K 5% 1/10W (C)	
R719	RN-ERG-I2B332JR-1/Y	Metallic	3.3K 5% 1/10W (C)	
R720	RN-ERG-I2B273JR-1/Y	Metallic	27 K 5% 1/10W (C)	
R722	RN-ERG-I2B274JR-1/Y	Metallic	270K 5% 1/10W (C)	
R724	RN-ERG-I2B105JR-1/Y	Metallic	1 M 5% 1/10W (C)	
R725,807,830 835	RN-ERG-I2B223JR-1/Y	Metallic	22 K 5% 1/10W (C)	
R733,760	RN-ERG-I2B474JR-1/Y	Metallic	470K 5% 1/10W (C)	
R735,736,737 739	RN-ERG-I2B103FR-1/Y	Metallic	10 K 1% 1/10W (C)	
R738,740	RN-ERG-I2B223FR-1/Y	Metallic	22 K 1% 1/10W (C)	
R741,856,857	RN-ERG-I2B472JR-1/Y	Metallic	4.7K 5% 1/10W (C)	
R744	RN-ERG-I2B273FR-1/Y	Metallic	27 K 1% 1/10W (C)	
R745	RN-ERG-I2B392FR-1/Y	Metallic	3.9K 1% 1/10W (C)	
R746	RN-ERD-AE221JB	Carbon	220 5% 1/4W	
R747	RN-ERD-AE100JB	Carbon	10 5% 1/4W	
R750,754,803 860,861	RN-ERG-I2B101JR-1/Y	Metallic	100 5% 1/10W (C)	
R755,817,818	RN-ERG-I2B393JR-1/Y	Metallic	39 K 5% 1/10W (C)	
R759,814	RN-ERG-I2B473JR-1/Y	Metallic	47 K 5% 1/10W (C)	
R761	RN-ERG-I2B334JR-1/Y	Metallic	330K 5% 1/10W (C)	
R765,766	RN-ERG-I2B104FR-1/Y	Metallic	100K 1% 1/10W (C)	

Symbol. No.	Stock No.	Parts name	Description Chip:(C)	Remark
R802	RN-ERG-AG150J-1	Metallic	15 5% 1W	
R804,822,827	RN-ERG-I2B183JR-1/Y	Metallic	18 K 5% 1/10W (C)	
R808	RN-ERG-I2B471JR-1/Y	Metallic	470 5% 1/10W (C)	
R809	RN-ERG-I2B123JR-1/Y	Metallic	12 K 5% 1/10W (C)	
R813	RN-ERG-I2B220JR-1/Y	Metallic	22 5% 1/10W (C)	
R823,828	RN-ERG-I2B333JR-1/Y	Metallic	33 K 5% 1/10W (C)	
R824,829	RN-ERG-I2B563JR-1/Y	Metallic	56 K 5% 1/10W (C)	
R825,838	RN-ERG-I2B184JR-1/Y	Metallic	180K 5% 1/10W (C)	
R836	RN-ERG-AG2R2J-1	Metallic	2.2 5% 1W	
R837	RN-ERG-AG471J-1	Metallic	470 5% 1W	
R851,852,862	RN-ERG-I2B182JR-1/Y	Metallic	1.8K 5% 1/10W (C)	
R855	RN-ERG-AG4R7J-1	Metallic	4.7 5% 1W	
R859	RN-ERG-I2B122JR-1/Y	Metallic	1.2K 5% 1/10W (C)	
R865	RN-ERG-IC103J-1/TY	Metallic	10 K 5% 1/8W (C)	
R887	RN-ERD-AE3R3JB	Carbon	3.3 5% 1/4W	
RV701	RN-ERK-ON1-1007	Metallic	1K VCO	
RV801,802,803	RN-ERV-ON1-229	Variable	22K EFB,FG,TG	
RV804	RN-ERV-ON1-230	Variable	47K FOF	
SEMICONDUCTORS				
D701,702,703 704,706,707 708,801,802	RN-EDS-MA151WK/TY	Silicon diode	Mark:MT (C)	O
D705,710	RN-EDS-MA151WA/TY	Silicon diode	Mark:MN (C)	O
D851	RN-EDT-RD6R8MB2/TY	Zener diode	Mark:682 (C)	O
D852	RN-EDS-MA153/TY	Silicon diode	Mark:MC (C)	O
D853,854,855	RN-EDP-SE310-PQ	LED		O
IC700	RN-EIC-CXA1081Q	Linear-monolithic IC	RF AMP.	O
IC701	RN-EIC-CXA1082BQ4	Linear-monolithic IC	SERVO SIGNAL PROCESSOR	O
IC702	RN-EID-CXD1167Q	Digital-monolithic IC	DIGITAL SIGNAL PROCESSOR	O
IC704	RN-EIC-MPC1715FU	Linear-monolithic IC	MULTIFUNCTION CONTROL	O
IC705	RN-EID-SM5807ES/TY	Digital-monolithic IC	SAMPLING DIGITAL FILTER	O
IC707	RN-EIM-MB88552H-377M	Digital-monolithic IC		O
IC708	RN-EIC-NJM2904M/TY	Linear-monolithic IC	OP.AMP.	O
IC709	RN-EIC-S8054ALB-LM/TY	Linear-monolithic IC	V.DETECTOR	O
IC710	RN-EIC-M5236ML/TY	Linear-monolithic IC	V.REG	O
IC711	RN-EIC-UPC7805HF	Linear-monolithic IC	V.REG	O
IC712	RN-EIC-S81250HG-RD/TY	Linear-monolithic IC	V.REG	O
IC713	RN-EID-TC4050BF/TY	Digital-monolithic IC	BUFFER	O
IC714	RN-EIC-PCM66P	Linear-monolithic IC	D/A CONVERTER	O
IC715	RN-EIC-NJM4560M/TY	Linear-monolithic IC	OP.AMP.	O
IC716	RN-EID-TC4S81F/TY	Digital-monolithic IC		O
IC717	RN-EIC-UPC78L05J	Linear-monolithic IC		O
IC851	RN-EIC-BA6238AN	Linear-monolithic IC	MOTOR DRIVER	O
IC852	RN-EIC-UPC78L05J	Linear-monolithic IC	V.REG	O
Q701,702,703 704	RN-EVS-2SD601-QR/TY	Silicon transistor	Mark:YQ,YR (C)	O
Q705,707,712 806,807,852	RN-EVS-DTC144EK/TY	Silicon transistor	Mark:26 (C)	O

Symbol. No.	Stock No.	Parts name	Description Chip:(C)	Re
854,858,859 860,861	RN-EVS-DTC144EK/TY	Silicon transistor	Mark:26 (C)	O
Q706,714,716 718,808	RN-EVS-DTA144EK/TY	Silicon transistor	Mark:16 (C)	O
Q708	RN-EVS-DTC114EK/TY	Silicon transistor	Mark:24 (C)	O
Q713,721	RN-EVS-DTA124EK/TY	Silicon transistor	Mark:15 (C)	O
Q717	RN-EVS-2SB1142-RS	Silicon transistor		O
Q719	RN-EVS-DTA144TK/TY	Silicon transistor	Mark:96 (C)	O
Q720	RN-EVS-DTC144TK/TY	Silicon transistor	Mark:06 (C)	O
Q801,810	RN-EVS-2SB1188-QR/TY	Silicon transistor		O
Q802,803,804 805	RN-EVS-DTC343TK/TY	Silicon transistor	Mark:H03 (C)	O
Q809	RN-EVS-2SC2812-567/TY	Silicon transistor	Mark:L5,L6,L7 (C)	O
Q811	RN-EVS-2SD1383K/TY	Silicon transistor		O
Q851,853,857	RN-EVH-PH106-LM	Optical coupler		O
Q855,856	RN-EVS-2SD636-QRS	Silicon transistor		O
MISCELLANEOUS ELECTRICAL				
J701	RN-EJU-9018-FAB12	Connector	12P	
J702	RN-EJU-4041-FAW04	Connector	4P	
J703	RN-EJU-4041-FAW08	Connector	8P	
J710,711,712 713	RN-EWI-1746C	Lead assembly	10P,6P-12P,5P	
J852	RN-EWI-1537B	Lead assembly	7P-7P	
J853	RN-EWI-1527E	Lead assembly	8P-8P	
J854	RN-EWI-1446	Lead assembly	2P FOR MOTOR	
J855	RN-EWI-1488A	Lead assembly	2P	
J856	RN-EWI-1447	Lead assembly	2P FOR CLAMP SW.	
L701,702,703	RN-ELH-C101-1031	Choke	100uH	
L704	RN-ELH-C1R0-LAL03KH	Choke	1uH	
L801	RN-ELH-C100-LAL03KH	Choke	10uH	
M851	RN-EDM-1119	DC motor	LOADING MOTOR	O
P852	RN-EJU-4006-MAW07	Connector	7P	
P853	RN-EJU-4006-MAW08	Connector	8P	
P854	RN-EJU-4009-MBW02	Connector	2P	
S851,852,853	RN-ESB-1N1-1016	Push switch		O
X700	RN-EXD-1027	Crystal	16.934MHz	
X701	RN-EXB-CSA4R00MG	Ceramic oscillator	4.00MHz	

NOTE : 1.Specifications subject to change without prior notice.

Illus. No.	Stock No.	Parts name	Description	Q'ty	Remark
MECHANICAL					
1	RN-MAS-1198C	Chassis	Main	1	
2	RN-MHE-2278H	Holder	Main holder	1	
3	RN-MHG-1013C	Guid rail		1	
4	RN-MST-1158	Spacer		2	
5	RN-MUL-1574C	Lever	Roller prese-fitting (L)	1	
7	RN-MUL-1576B	Lever		1	
8	RN-MUL-1577C	Lever	Disc detection	1	
9	RN-MSC-1605A	Spring	Roller prese-fitting (L)	1	
10	RN-MSC-1606C	Spring	Roller prese-fitting (R)	1	
11	RN-MSC-1607A	Spring	(top/bottom)	1	
13	RN-MUG-1270A MKS-1036F 35	Gear	Intermediate gear	1	
14	RN-MUG-1271	Gear	Drive gear	1	
15	RN-MUG-1313	Gear	Roller gear	1	
16	RN-MUG-1273	Gear	Clamp pressure reduction	1	
17	RN-MUG-1274A	Gear	Pinion	1	
18	RN-MUG-1275A	Gear	Rack	1	
19	RN-MHE-2279E	Holder	Gear holder	1	
20	RN-MRP-1184A	Roller	Rubber roller	1	
21	RN-MST-1184B	Spacer	Roller bearing (R)	1	
22	RN-MST-1192A	Spacer	Roller bearing (L)	1	
※23	RN-MPC-2441F	PC board	Deck	1	
26	RN-MHE-2687A	Holder	Unit holder	1	
27	RN-MUL-1558D	Lever	Clamp arm	1	
28	RN-MHE-2054C	Holder	Clamp cover	1	
29	RN-MSE-2167D	Spacer	Clamper	1	
30(PU901)	RN-MDU-1025/S	Deck unit	Pick up unit	1	O
31	RN-MHE-2295B	Holder	Damper retainer	4	
32	RN-MSE-2317	Spacer	Damper	3	
33	RN-MSE-2318	Spacer	Damper	1	
34	RN-MSC-1502	Spring	Damper spring	2	
35	RN-MSC-1509A	Spring	Damper spring	2	
36	RN-MSE-2294A	Spacer	Disc support	1	
37	RN-MUL-1715A	Lever	Unit lock (L)	1	
38	RN-MUL-1560C	Lever	Unit lock (R)	1	
39	RN-MUL-1561A	Lever	Unit lock claw	1	
40	RN-MSC-1609	Spring	Clamp arm	1	
41	RN-MSC-1611	Spring	Unit lock	1	
46	RN-MUL-1562D	Lever	Trigger lever	1	
47	RN-MSE-2366	Spacer	Trigger spacer	1	
48	RN-MUL-1563D	Lever	8/12 rotation (L)	1	
49	RN-MUL-1564D	Lever	8/12 rotation (R)	1	
50	RN-MUL-1565D	Lever	8/12 horizontal (L)	1	
51	RN-MUL-1566C	Lever	8/12 horizontal (R)	1	
52	RN-MUL-1567B	Lever	For 8/12 lock	1	
53	RN-MUL-1568C	Lever	For Cam	1	

Illus. No.	Stock No.	Parts name	Description	Q'ty	Remark
54	RN-MUL-1595C	Lever	For 8 guide (L)	1	
55	RN-MUL-1570B	Lever	For 8 guide (R)	1	
56	RN-MUL-1571F	Lever		1	
57	RN-MUL-1596A	Lever	For insert completion	1	
58	RN-MUL-1578D	Lever	For 8 guide lock (L)	1	
59	RN-MSC-1608	Spring	For completion	1	
60	RN-MSC-1610C	Spring	For 8/12 lever	2	
61	RN-MSC-1648	Spring	For 8 backward	1	
66	RN-MSC-1614C	Spring		1	
67	RN-MSE-2513A	Spacer	Opening guide (top)	1	
68	RN-MSE-2296D	Spacer	Opening guide (bottom)	1	
69	RN-MST-1194	Spacer	For rotating horizontal	2	
70	RN-MHE-2281C	Holder	PC board (top)	1	
71	RN-MST-1189A	Spacer	For rotating horizontal	3	
73	RN-MSE-2367D	Spacer	Slide sheet	1	
74	RN-MSE-2368D	Spacer	Slide sheet	1	
75	RN-MWP-1162	Washer	Slide sheet	2	
76	RN-MSE-2370B	Spacer	Slide sheet	1	
79	RN-MHE-2340	Holder		1	
80	RN-MIP-1771	Insulater		1	
90	RN-MSC-1649	Spring	For cam plate bias	1	
92	RN-MSE-2305	Spacer	Protective sheet	2	
93	RN-MSE-2306	Spacer	Protective sponge	1	
※1 94	RN-MSC-1630	Spring	For including loading	1	
※2 94	RN-MSC-1706	Spring	For including loading	1	
101	F6-SBD-2X3S	Screw	2x3mm	12	
102	F6-SBD-2X4S	Screw	2x4mm	2	
103	F6-SNA-2X2.5S	Screw	2x2.5mm	4	
104	F6-SW2NA-2X4S	Screw	2x4mm	3	
105	F6-SSA-2X5S	Screw	2x5mm	2	
106	RN-MET-1427	Special screw	2x6mm	3	
107	RN-MET-1319	Special screw	2x4mm	4	
108	RN-MET-1423	Special screw	2x3mm	1	
109	RN-MET-1464	Special screw		3	
110	RN-MET-1276	Special screw	2x3mm	2	
111	RN-MET-1193	Special screw		1	
114	RN-MWP-1053	Washer	For lock lever (L)	2	
115	RN-MWP-1039	Washer		17	
116	RN-MWP-1146	Washer	For 8 guide	1	
119	RN-MWP-1120	Washer		1	
120	RN-MWP-1145	Washer		4	
121	F6-ER-1.5	E-type ring	1.5mm	10	
122	F6-ER-2.5	E-type ring	2.5mm	2	
☆150	———	PC board and parts		1	——
151	RN-MTD-1441	Chassis		1	
152	RN-MRE-1277B	Heat-sink		1	

Illus. No.	Stock No.	Parts name	Description	Q'ty	Remark
154	F6-SBD-3X4S	Screw	3X4mm	8	
158	RN-MWS-1079	Washer	For lock lever(L)	2	
159	RN-MWP-1158	Washer		1	
160	RN-MST-1185A	Spacer	For guide lever(R)	1	
162	RN-MWP-85	Washer		2	
163	F6-SSA-3X4S	Screw	3x4mm	1	
165	RN-MSE-2862A	Spacer	For LED (WHT)	2	
166	RN-MSE-2493A	Spacer	For LED (BLK)	1	
167	RN-MET-243	Special screw		2	
168	RN-MWP-1166	Washer		4	
169	RN-MWS-1071	Washer		1	
170	RN-MET-1424	Special screw		1	
171	RN-MSE-2839	Spacer		1	
172	RN-MSE-2861A	Spacer		2	
※175	RN-MPC-3026A	PC board		1	

NOTE:
1. Specifications subject to change without prior notice.
2. It takes long time to supply some parts marked ☆ since we do not always have them in store. In the worst case, we can't supply them for you.
3. ※ marked PC board does not include component parts to be mounted.
4. ＊ 1-marked parts are for model (CD-1634) only.
5. ＊ 2-marked parts are for model (CD-1636) only.

CS DECK UNIT (MDK-76-06A/S)

Symbol. No.	Stock No.	Parts name	Description Chip:(C)	Remark
CAPACITORS			Unit: μF, P=pF, F=F	
C901	RN-ECE-M221V16-613	Electrolytic	220 16 V	
C902,903	RN-ECC-C2CH470JYHPB/Y	Ceramic	47 p 50 V (C)	
C904	RN-ECK-C2D333MYEPB/Y	Ceramic	.033 25 V (C)	
C905	RN-ECE-M4R7V10-904	Electrolytic	4.7 10 V	
C906,907,908 909	RN-ECC-C2SL101JYHPC/Y	Ceramic	100 p 50 V (C)	
C910,911	RN-ECE-M470V10-12	Electrolytic	47 10 V	
C912,920	RN-ECE-M101V10-52	Electrolytic	100 10 V	
C913,915,917 919,921,932	RN-ECE-M100V16-9	Electrolytic	10 16 V	
C914	RN-ECK-C2B102KYHPC/Y	Ceramic	1000p 50 V (C)	
C916,918	RN-ECE-MR22V50-5	Electrolytic	.22 50 V	
C922,923	RN-ECK-C2B223KYHPC/Y	Ceramic	.022 50 V (C)	
C924,928	RN-ECE-M1R0V50-13	Electrolytic	1 50 V	
C925	RN-ECK-C2B103KYHPB/Y	Ceramic	.01 50 V (C)	
C926	RN-ECF-R223J100-36	Mylar	.022 100V	
C927	RN-ECH-R683V50-2	M.P.	.068 50 V	
C930,931	RN-ECF-R103V50-JZ	Mylar	.01 50 V	
RESISTORS			Unit: ohm, K=kohm	
R901,903,904 908,910,913	RN-ERG-I2B103JR-1/Y	Metallic	10 K 5% 1/10W (C)	
R902,905,906 907,909	RN-ERG-I2B102JR-1/Y	Metallic	1 K 5% 1/10W (C)	
R911	RN-ERC-AF4R7K	Solid	4.7 10% 1/2W	
R914,915,916 917,924,929 930,931,936 938	RN-ERG-I2B223JR-1/Y	Metallic	22 K 5% 1/10W (C)	
R918,926	RN-ERG-I2B181JR-1/Y	Metallic	180. 5% 1/10W (C)	
R919,927	RN-ERG-I2B334JR-1/Y	Metallic	330K 5% 1/10W (C)	
R920,937	RN-ERG-I2B123JR-1/Y	Metallic	12 K 5% 1/10W (C)	
R921,928	RN-ERG-I2B183JR-1/Y	Metallic	18 K 5% 1/10W (C)	
R922	RN-ERG-I2B331JR-1/Y	Metallic	330 5% 1/10W (C)	
R923	RN-ERG-I2B820JR-1/Y	Metallic	82 5% 1/10W (C)	
R925	RN-ERG-I2B101JR-1/Y	Metallic	100 5% 1/10W (C)	
R932	RN-ERG-I2B471JR-1/Y	Metallic	470 5% 1/10W (C)	
R933	RN-ERG-I2B433JR-1/Y	Metallic	43 K 5% 1/10W (C)	
R934	RN-ERG-I2B303JR-1/Y	Metallic	30 K 5% 1/10W (C)	
R935	RN-ERG-I2B154JR-1/Y	Metallic	150K 5% 1/10W (C)	
R937	RN-ERG-I2B363JR-1/Y	Metallic	36 K 5% 1/10W (C)	
R940,942,944	RN-ERG-IC471J-1/TY	Metallic	470 5% 1/8W (C)	
R941,943,945	RN-ERG-IC683J-1/TY	Metallic	68 K 5% 1/8W (C)	
R946	RN-ERG-I2B104JR-1/Y	Metallic	100K 5% 1/10W (C)	
RV901	RN-ERK-ON1-1017	Metallic	100K	
SEMICONDUCTORS				
D901,903	RN-EDS-MA151WA/TY	Silicon diode	Mark:MN (C)	O

Symbol. No.	Stock No.	Parts name	Description Chip:(C)	Remark
D902	RN-EDS-10E1/FO	Silicon diode		O
IC901	RN-EIM-MB88505H-1132M	Digital-monolithic IC		O
IC902	RN-EIC-BA3430FS/TY	Linear-monolithic IC	DUAL PRE-AMP.	O
IC903	RN-EIC-BA6218	Linear-monolithic IC	FOR MOTOR	O
IC904	RN-EIC-M51971FP/TY	Linear-monolithic IC		O
Q901,911,912	RN-EVS-DTA114EK/TY	Silicon transistor	Mark:14 (C)	O
Q902,905,913	RN-EVS-DTC114EK/TY	Silicon transistor	Mark:24 (C)	O
Q903,906,907	RN-EVS-2SB793-S	Silicon transistor		O
Q904	RN-EVS-DTC124EK/TY	Silicon transistor	Mark:25 (C)	O
Q908,909,914	RN-EVS-2SD973-S	Silicon transistor		O
Q910	RN-EVS-DTD143EK/TY	Silicon transistor	Mark:F23 (C)	O
Q915	RN-EVS-2SD601-QRS/TY	Silicon transistor	Mark:YQ,YR,YS (C)	O
Q940,941,942	RN-EVS-DTC144EK/TY	Silicon transistor	Mark:26 (C)	O
VH901	RN-EVH-GP2S07C	Optical coupler	FOR HEAD	O
VH902,903	RN-EVH-GP2S06C	Optical coupler	REEL R,L	O
MISCELLANEOUS ELECTRICAL				
A901(201)	RN-EIM-C44-1074	Playback head		O
E901(93)	RN-EEM-1057A	Solenold	FOR FF/REW	
J901	RN-EJU-4023-MBN14	Connector	14P	
J902,903	RN-EJU-9063-FBC14/TY	Connector	14P	
J906	RN-EWI-2215A	Lead assembly	5P-5P	
JP905	RN-EWI-1431A	Lead assembly	8P	
JP906(52)	RN-EWI-2217	Lead assembly		
M901(10)	RN-EDM-1159	DC motor	FOR CAP.MOTOR	O
M902(85)	RN-EDM-1118	DC motor	FOR PROGRAM CHAINGING	O
P904(88)	RN-EJU-4032-MAN04	Connector	4P	
P905	RN-EJU-4009-MBW07	Connector	7P	
S901(87)	RN-ESR-1036B	Rotary switch	FOR M902	O
S902(70)	RN-ESB-1N1-1033	Push switch	FOR TAPE	O
S903(51)	RN-ESM-1025A	Micro switch	INSERTION START SW	O
S904,905(69)	RN-ESB-1N1-1016	Push switch		O
X901	RN-EXB-CSA3R58MG	Ceramic oscillator	3.58MHz	

Illus. No.	Stock No.	Parts name	Description	Q'ty	Remark
MECHANICAL					
1	RN-MAS-1300	Chassis		1	
2	RN-MUL-1490A	Lever		1	
3	RN-MUL-1491D	Lever		1	
4	RN-MKR-1225C	Pinchroller mechanism	A'ssy(L)	1	
5	RN-MKR-1226C	Pinchroller mechanism	A'ssy(R)	1	
6	RN-MHE-2218D	Holder	FOR F.W.	1	
7	RN-MHE-2219H	Holder	FOR REEL	1	
8	RN-MUL-1492D	Lever		1	
9	RN-MUL-1493D	Lever		1	
10(M901)	RN-EDM-1159	DC motor	FOR CAP.MOTOR	1	O
11	RN-MUB-1058B	Belt	FOR F.W.	1	O
12	RN-MKS-1035E	Slip mechanism	REEL A'SSY(L)	1	O
13	RN-MKS-1036E	Slip mechanism	REEL A'SSY(R)	1	O
14	RN-MUG-1244A	Gear		2	
15	RN-MRP-1160B	Roller		1	
16	RN-MUF-1032B	Flywheel	(L)	1	
17	RN-MSC-1550B	Spring		2	
18	RN-MSC-1551B	Spring	FOR PINCHROLLER(L)	1	
19	RN-MSC-1552B	Spring	FOR PINCHROLLER(R)	1	
20	RN-MSC-1553	Spring	BACKTENTION	2	
21	RN-MSC-1554	Spring		1	
※22	RN-MPC-2438E	PC board	FOR REEL P.C.B	1	
23	RN-MHE-2220D	Holder	ELEVATOR	1	
24	RN-MHE-2221G	Holder	FOR ELEVATOR(No.23)	1	
25	RN-MUL-1494B	Lever		1	
26	RN-MYT-1359E	Sub-chassis		1	
27	RN-MUL-1495A	Lever		1	
28	RN-MUL-1496C	Lever		1	
29	RN-MUL-1497E	Lever		1	
30	RN-MUL-1498D	Lever		1	
31	RN-MUL-1499E	Lever		1	
32	RN-MHE-2805	Holder		1	
33	RN-MUL-1501C	Lever		1	
34	RN-MUL-1502B	Lever		1	
35	RN-MUL-1580C	Lever		1	
36	RN-MUG-1246C	Gear		1	
37	RN-MUG-1247B	Gear		1	
38	RN-MUG-1248B	Gear		1	
39	RN-MUG-1249A	Gear		1	
40	RN-MUG-1250A	Gear		1	
41	RN-MUG-1251A	Gear		1	
42	RN-MSC-1604A	Spring		1	
43	RN-MSC-1617	Spring		1	
44	RN-MSC-1627	Spring		1	
45	RN-MSI-1143C	Pin		1	

Illus. No.	Stock No.	Parts name	Description	Q'ty	Remark
46	RN-MST-1171A	Spacer		1	
47	RN-MSC-1557	Spring		1	
48	RN-MSC-1558	Spring		1	
49	RN-MSC-1559A	Spring		1	
50	RN-MSW-1017	Spring		1	
51(S903)	RN-ESM-1025A	Micro switch	INSERTION START SW	1	O
52(JP906)	RN-EWI-2217	Lead assembly		1	
53	RN-MSE-2336A	Spacer		3	
54	RN-MYT-1360E	Sub-chassis	HEAD PLATE	1	
55	RN-MUL-1505C	Lever		1	
56	RN-MLT-1080A	Label		1	
57	RN-MUL-1506C	Lever		1	
58	RN-MUL-1507C	Lever		1	
59	RN-MUL-1508E	Lever		1	
※60	RN-MPM-3437B	PC board		1	
61	RN-MHZ-1053	Holder	HEAD HOLDER	1	
62	RN-MUC-1041B	Cam	FOR AZIMUTH	1	
63	RN-MSP-1104A	Spring		1	
64	RN-MSC-1561	Spring		1	
65	RN-MSC-1562	Spring		1	
66	RN-MSC-1563C	Spring		1	
67	RN-MUL-1512A	Lever	BRAKE(L)	1	
68	RN-MUL-1513A	Lever	BRAKE(R)	1	
69(S904)	RN-ESB-1N1-1016	Push switch	FOR HEAD PLATE	1	O
69(S905)	RN-ESB-1N1-1016	Push switch	FOR METAL TAPE	1	O
70(S902)	RN-ESB-1N1-1033	Push switch		1	O
71	RN-MSC-1564B	Spring		1	
72	RN-MSC-1565	Spring		1	
73	RN-MSC-1566A	Spring		1	
74	RN-MSC-1567	Spring	FOR BRAKE	2	
75	RN-MYT-1361E	Sub-chassis		1	
76	RN-MHE-2224D	Holder	FOR MOTOR	1	
77	RN-MUL-1509A	Lever		1	
78	RN-MUL-1510D	Lever		1	
79	RN-MUG-1253A	Gear		1	
80	RN-MUG-1254A	Gear		1	
81	RN-MUG-1255A	Gear		1	
82	RN-MUG-1256A	Gear		1	
83	RN-MUG-1259A	Gear		1	
84	RN-MUC-1042A	Cam		1	
85(M902)	RN-EDM-1118	DC motor		1	O
86	RN-MUB-1060B	Belt		1	O
87(S901)	RN-ESR-1036B	Rotary switch		1	O
88(P904)	RN-EJU-4032-MAN04	Connector	4P	1	
89	RN-MSC-1618	Spring		1	
※90	RN-MPM-3537	PC board		1	

Illus. No.	Stock No.	Parts name	Description	Q'ty	Remark
91	RN-MUL-1511C	Lever		1	
92	RN-MSW-1018B	Spring		1	
93(E901)	RN-EEM-1057A	Solenoid	FOR FF/REW	1	
94	RN-MUG-1258A	Gear		2	
95	RN-MUF-1036A	Flywheel	(R)	1	
100	RN-MHL-1131	Holder	FOR MOTOR	1	
101	RN-MHZ-1055	Holder		1	
201(A901)	RN-EHM-C44-1074	Playback head		1	O
☆202	———	PC board and parts		1	—
301	F6-SNA-2X2.5S	Screw	FOR CH MOTOR	2	
302	F6-SNA-2X3.5S-M-ZN2A	Screw	FOR CAP.MOTOR,2X3.5mm	2	
303	F6-SBD-2X4S	Screw		10	
306	F6-SW4NA-2X4S	Screw	2X4mm	4	
307	F6-SW4NA-2X6S	Screw	2X6mm	1	
308	RN-MET-1339	Special screw		1	
309	RN-MET-1266	Special screw	FOR HEAD HOLDER	2	
310	RN-MET-1429	Special screw	FOR HEAD	2	
311	RN-MET-1424	Special screw		1	
312	RN-MET-1503A	Special screw		3	
313	RN-MET-1504B	Special screw	FOR AZIMUTH	2	
314	RN-MWP-85	Washer		3	
315	RN-MWP-1039	Washer		17	
316	RN-MWP-80A	Washer	FOR REEL	2	
317	RN-MWS-1054	Washer		2	
318	F6-ER-1.5	E-type ring		8	
319	F6-ER-2	E-type ring		12	
320	RN-MHJ-2	Ring		1	
321	F6-SNA-2X2S	Screw	2X2mm	3	
322	F6-SW3NA-2X4S	Screw	2X4mm	4	

NOTE : 1.Specifications subject to change without prior notice.
2.It takes long time to supply some parts marked ☆ since we do not always have them in store.
3.※ marked PC board does not include component parts to be mounted.