POWER
MENU
SOURCE
SEL
NUMBER
VOL
MUTE
#
1
2
3
BAND
SCAN
REP
4
5
6
7
8
9
BAND
0
DISP
SET
Panasonic
Car Audio

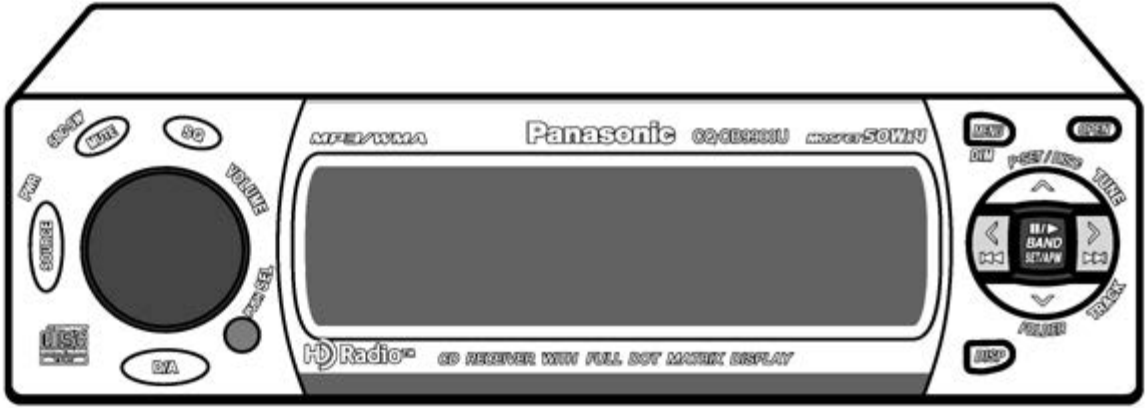
SCAN
MUTE
SO
VOLUME
SOURCE
DVA
MP3/WMA
Panasonic
CQ-C8940U
MOSFET 50W x 4
MENU
DISP
P-SET/ASS
TUNE
BAND
SET/AM
FOLDER
TRACK
DISP
HD Radio
CD RECEIVER WITH FULL DOT MATRIX DISPLAY

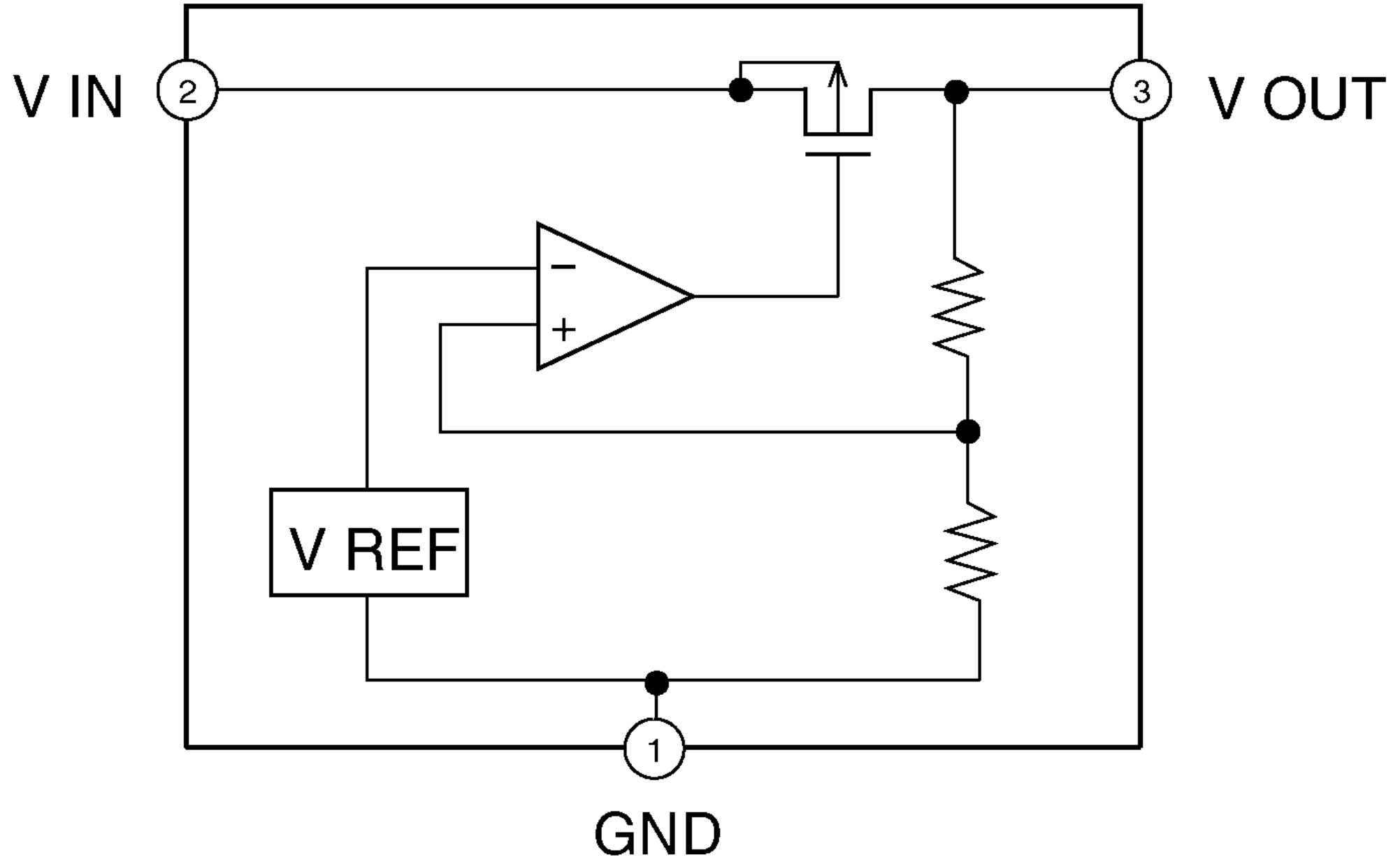
V IN
2
3
V OUT
−
+
V REF
1
GND

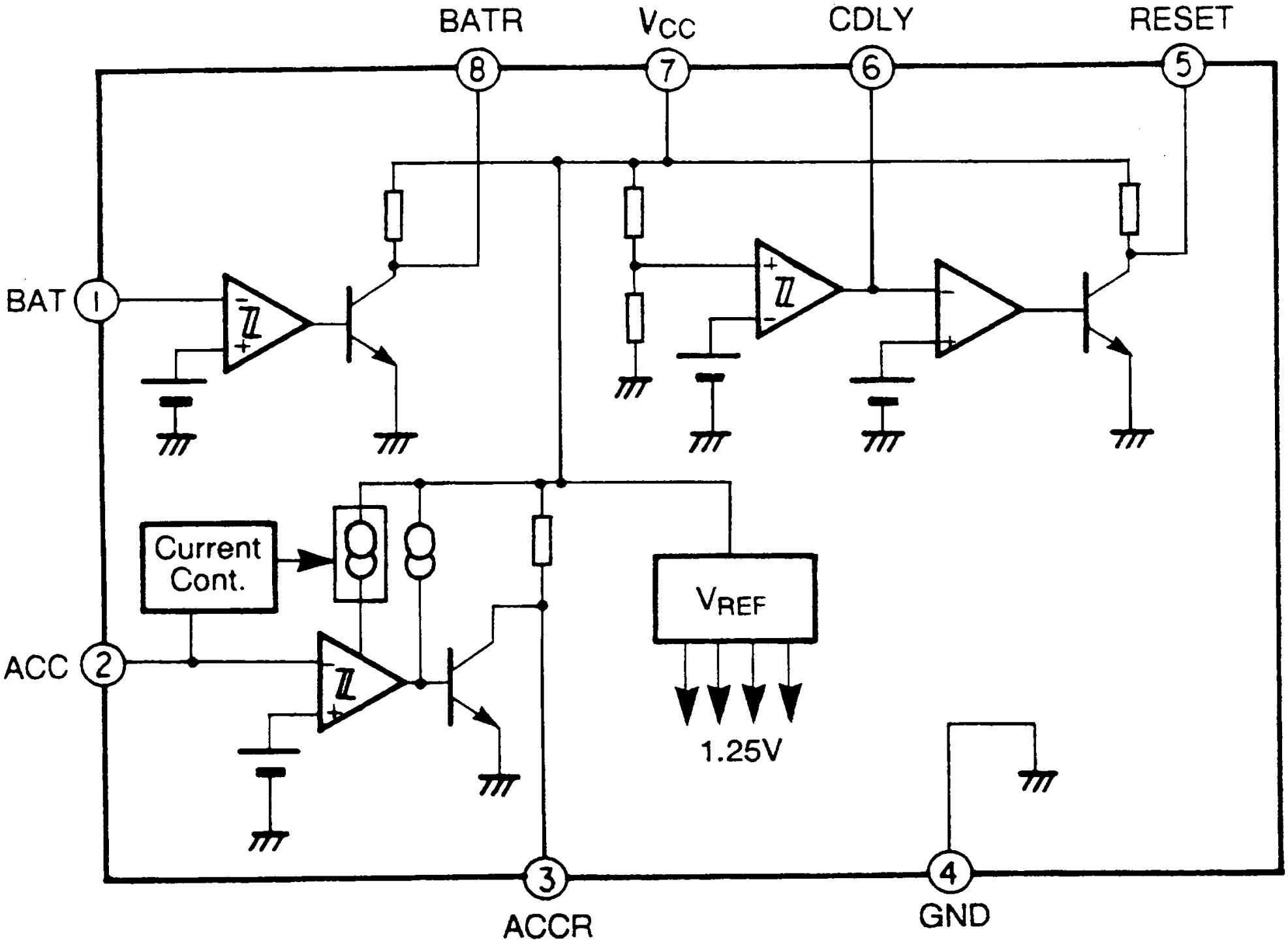
BATR
VCC
CDLY
RESET
8
7
6
5
BAT
1
Current Cont.
VREF
ACC
2
1.25V
3
ACCR
4
GND

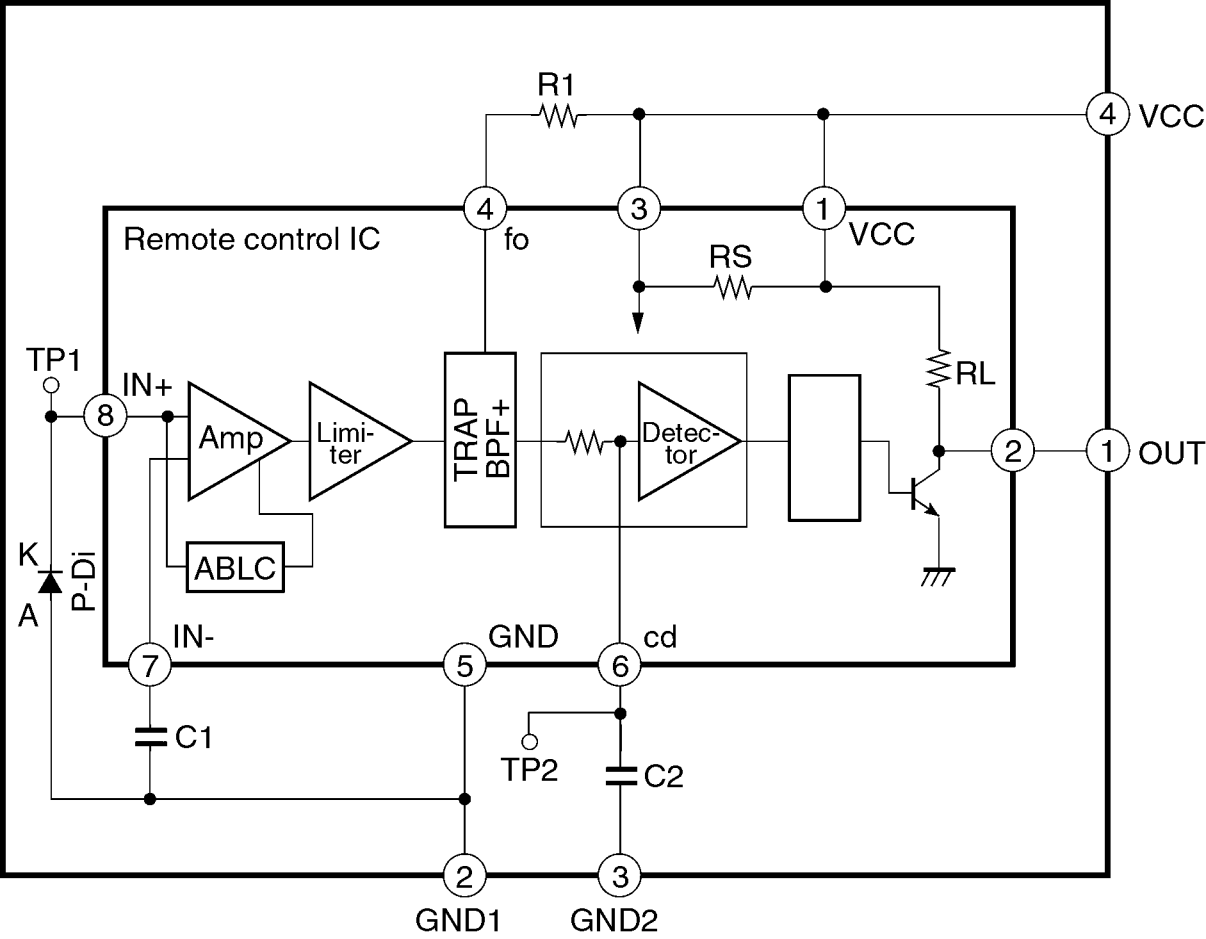
R1
4
VCC
Remote control IC
4
fo
3
1
VCC
RS
TP1
IN+
8
Amp
Limi-
ter
TRAP
BPF+
Detec-
tor
RL
2
1
OUT
K
P-Di
A
ABLC
IN-
7
GND
5
cd
6
C1
TP2
C2
2
GND1
3
GND2

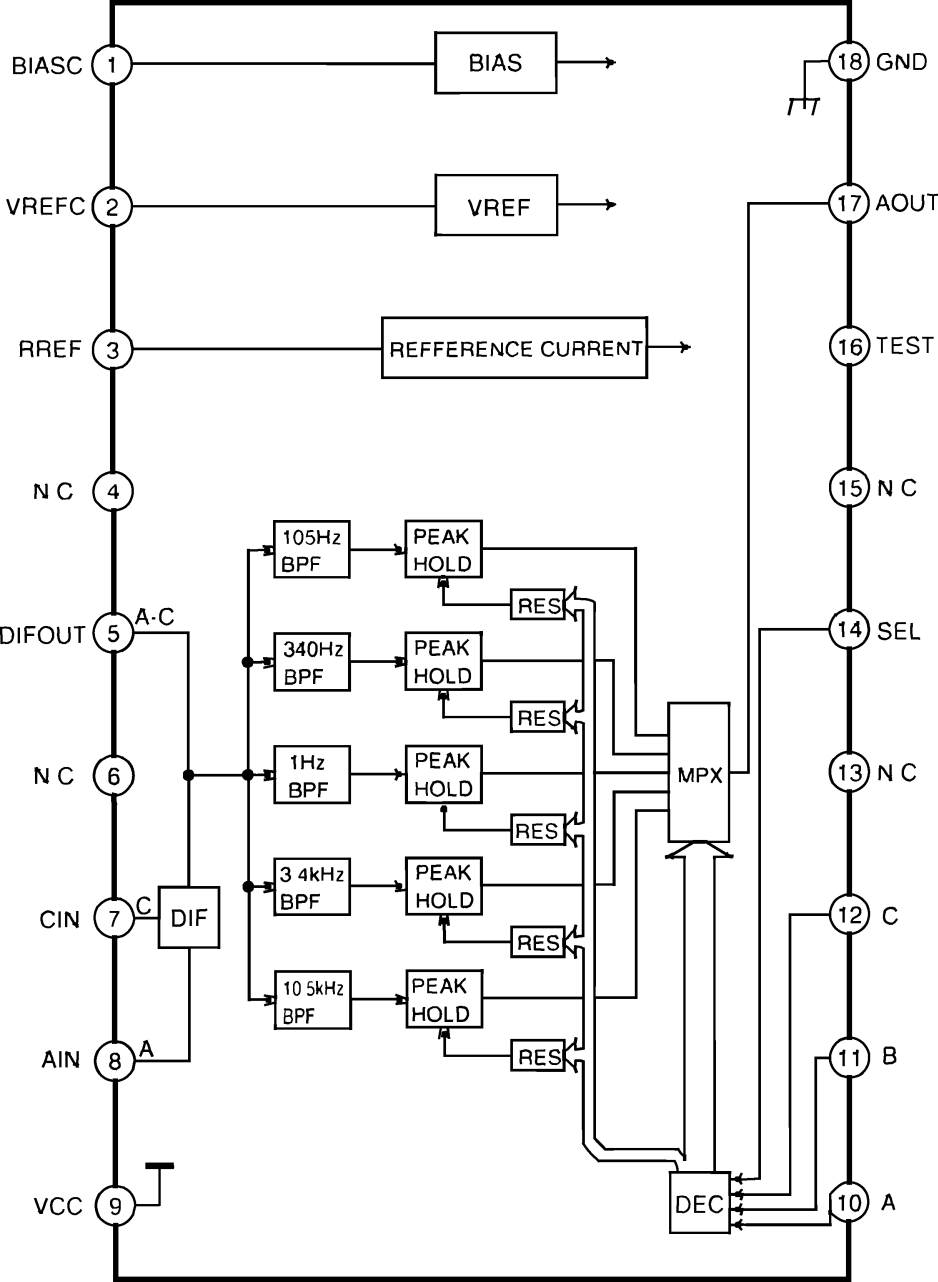
BIASC
1
BIAS
18
GND
VREFC
2
VREF
17
AOUT
RREF
3
REFFERENCE CURRENT
16
TEST
N C
4
15
N C
DIFOUT
5
A-C
14
SEL
N C
6
13
N C
CIN
7
C
DIF
12
C
AIN
8
A
11
B
VCC
9
10
A
105Hz BPF
340Hz BPF
1Hz BPF
3 4kHz BPF
10 5kHz BPF
PEAK HOLD
RES
MPX
DEC

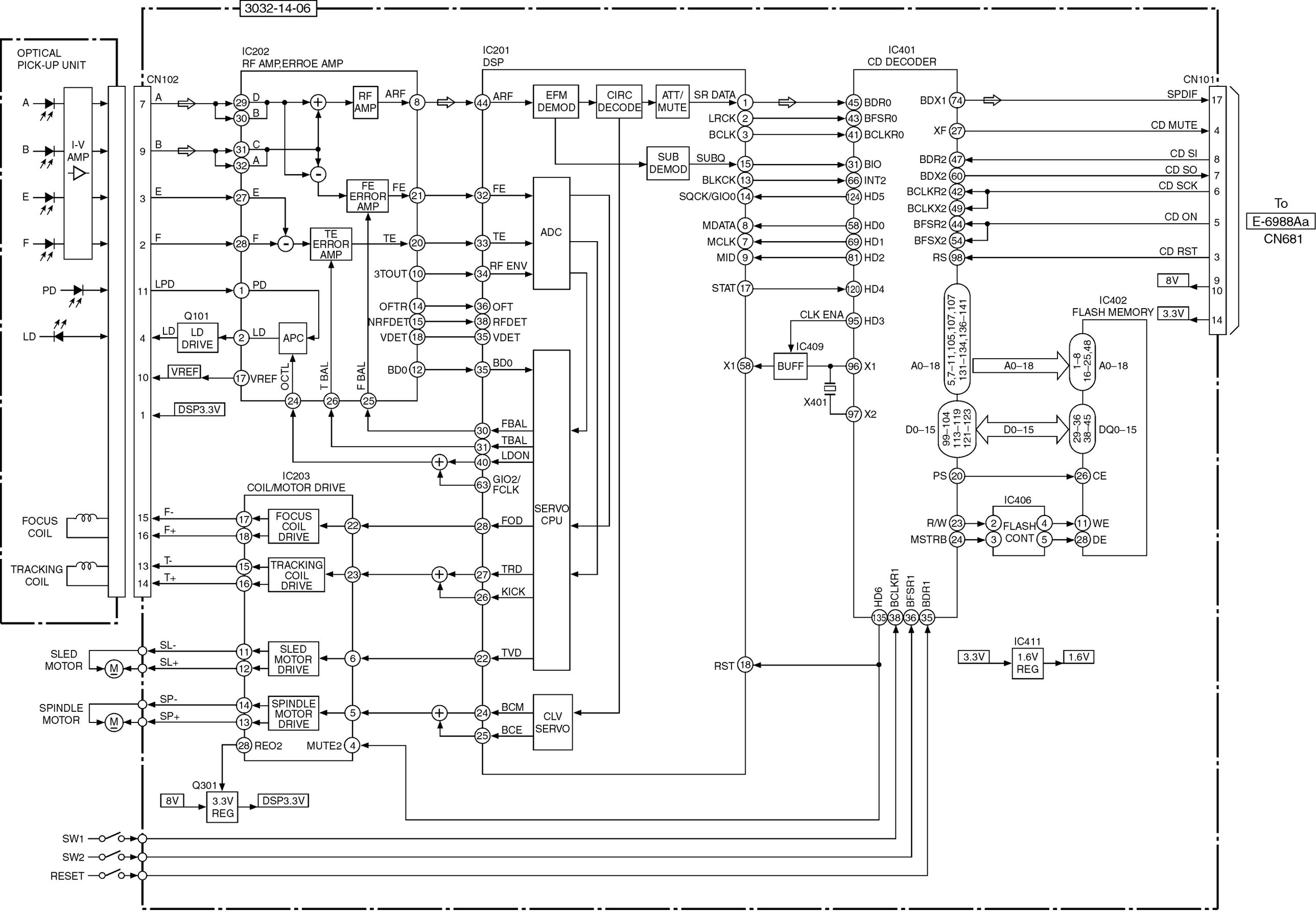

YGFD15283 CD SERVO BLOCK

Printed in Japan (K) 2004. 2 (Recycled Paper)

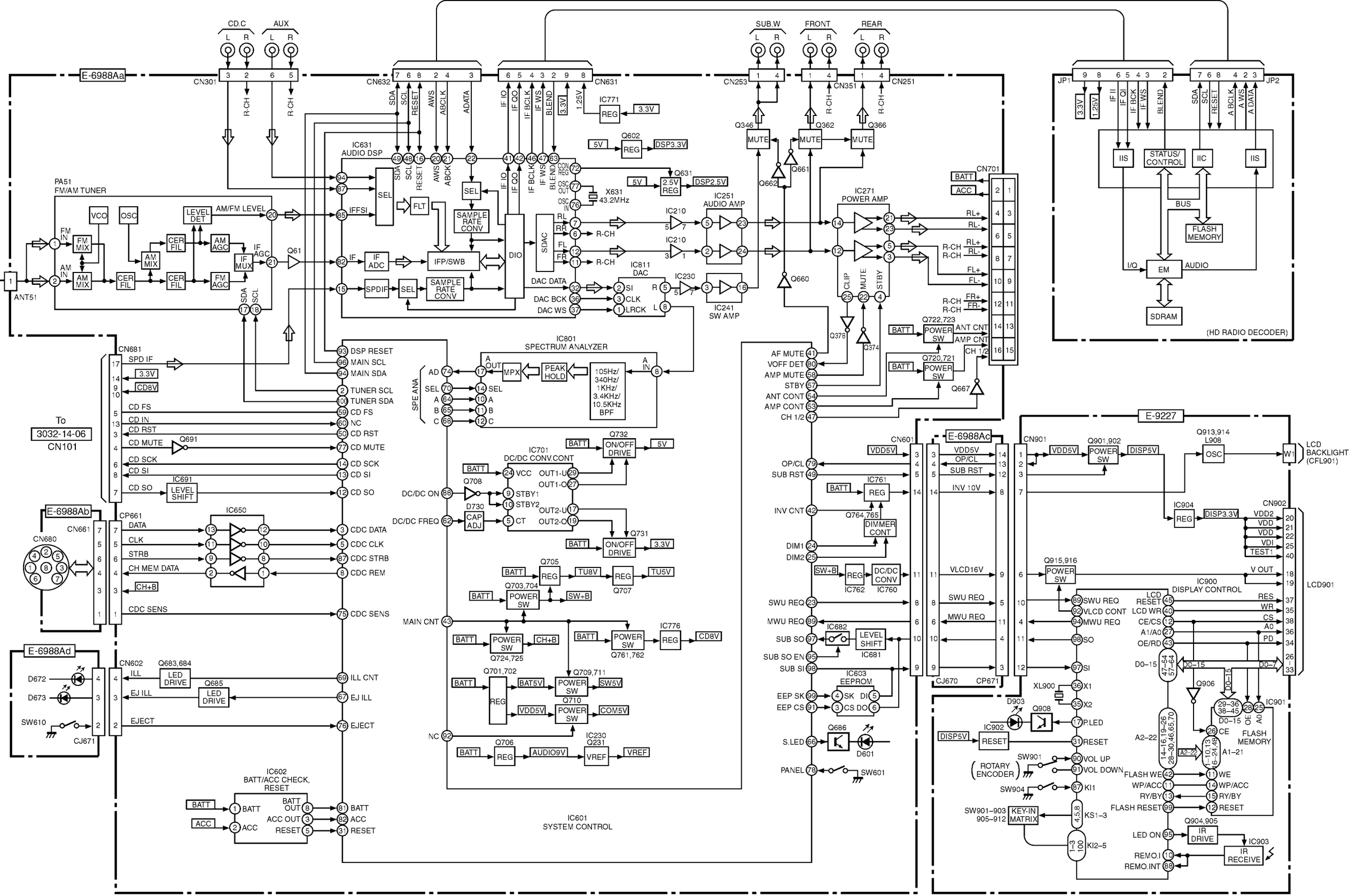

CQ-CB9900U MAIN/DISPLAY

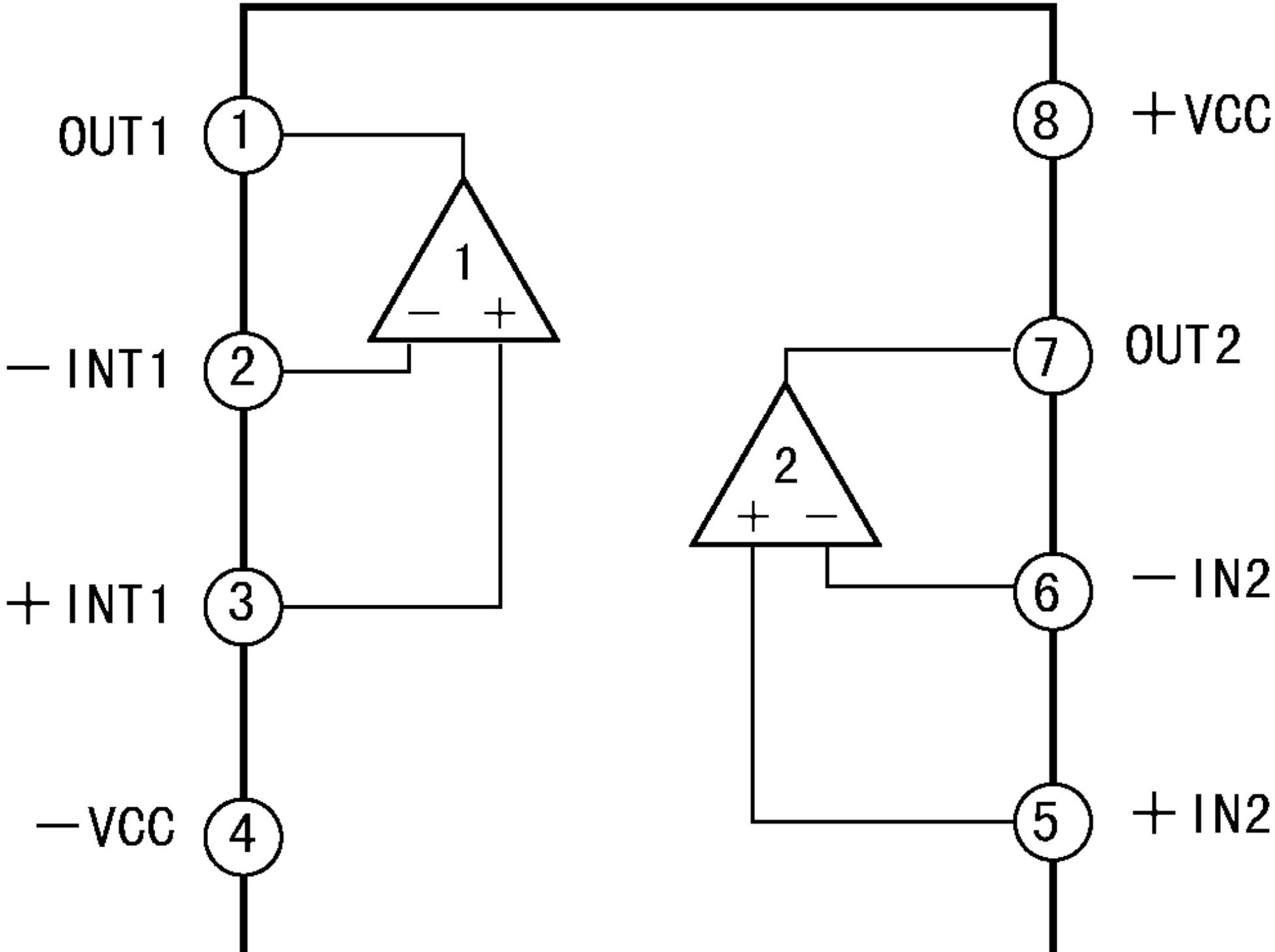
OUT1
1
−INT1
2
+INT1
3
−VCC
4
8
+VCC
7
OUT2
6
−IN2
5
+IN2
1
−
+
2
+
−

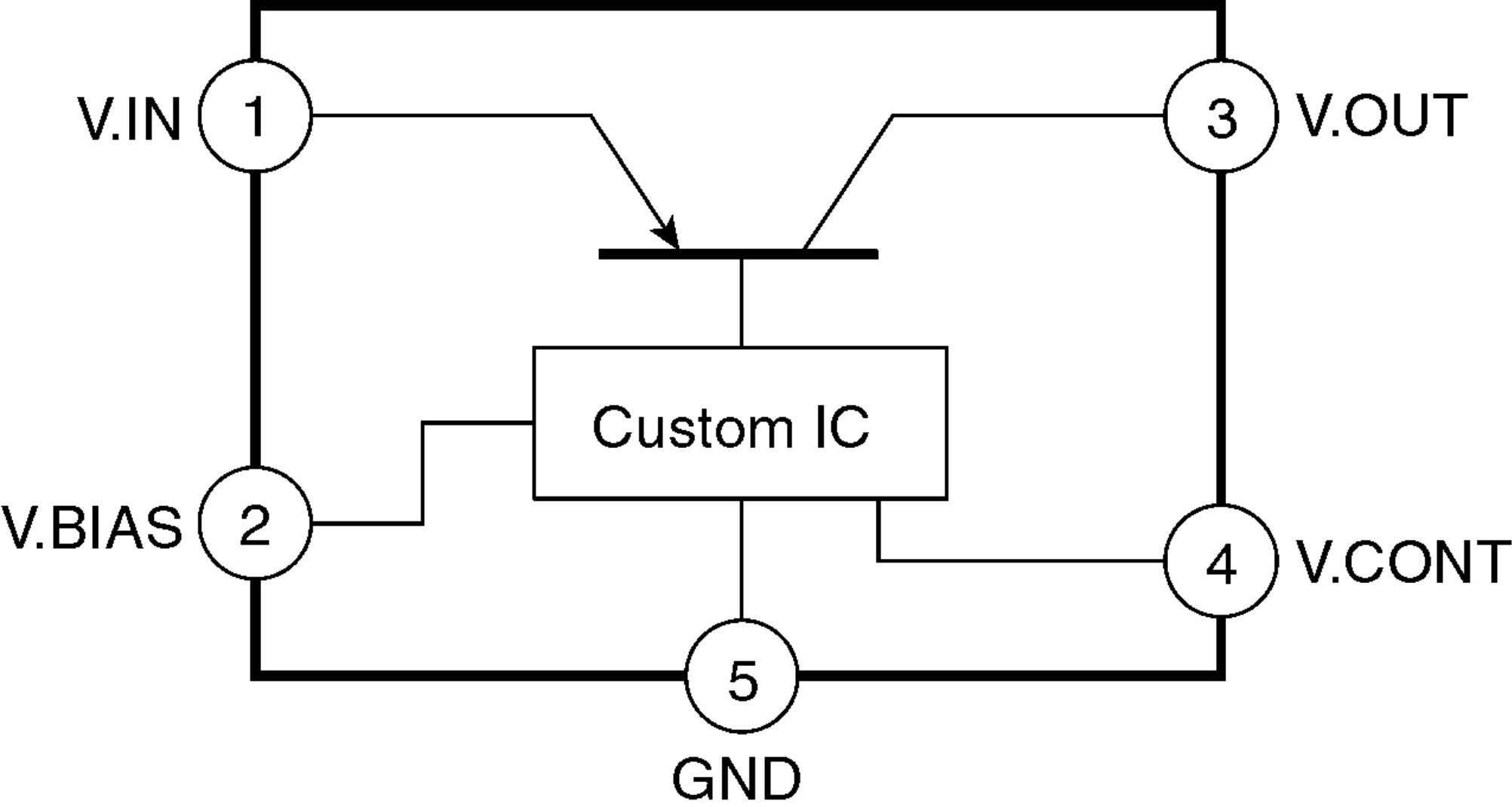
V.IN
1
3
V.OUT
Custom IC
V.BIAS
2
4
V.CONT
5
GND

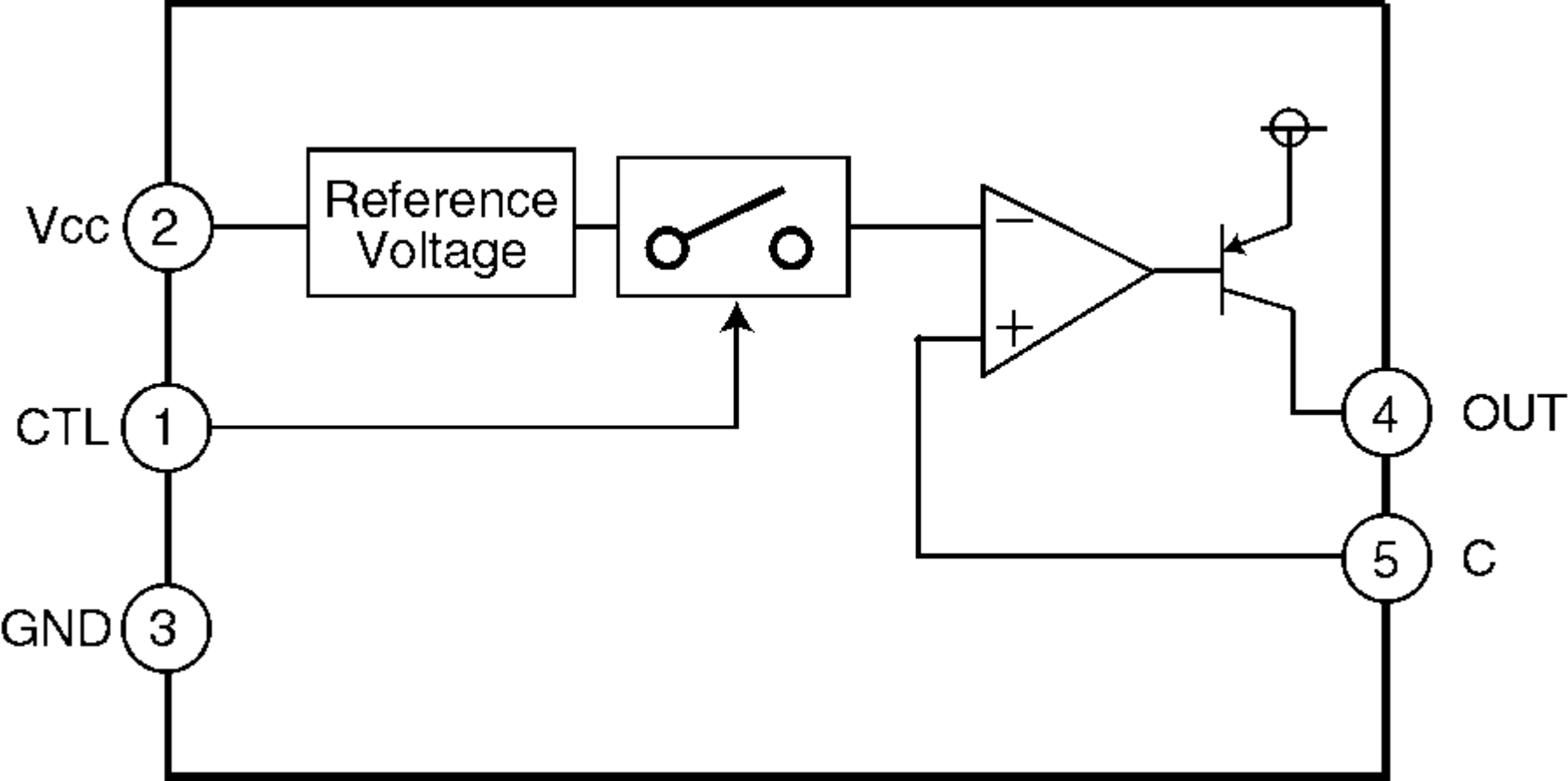
Vcc
2
Reference
Voltage
CTL
1
GND
3
4
OUT
5
C

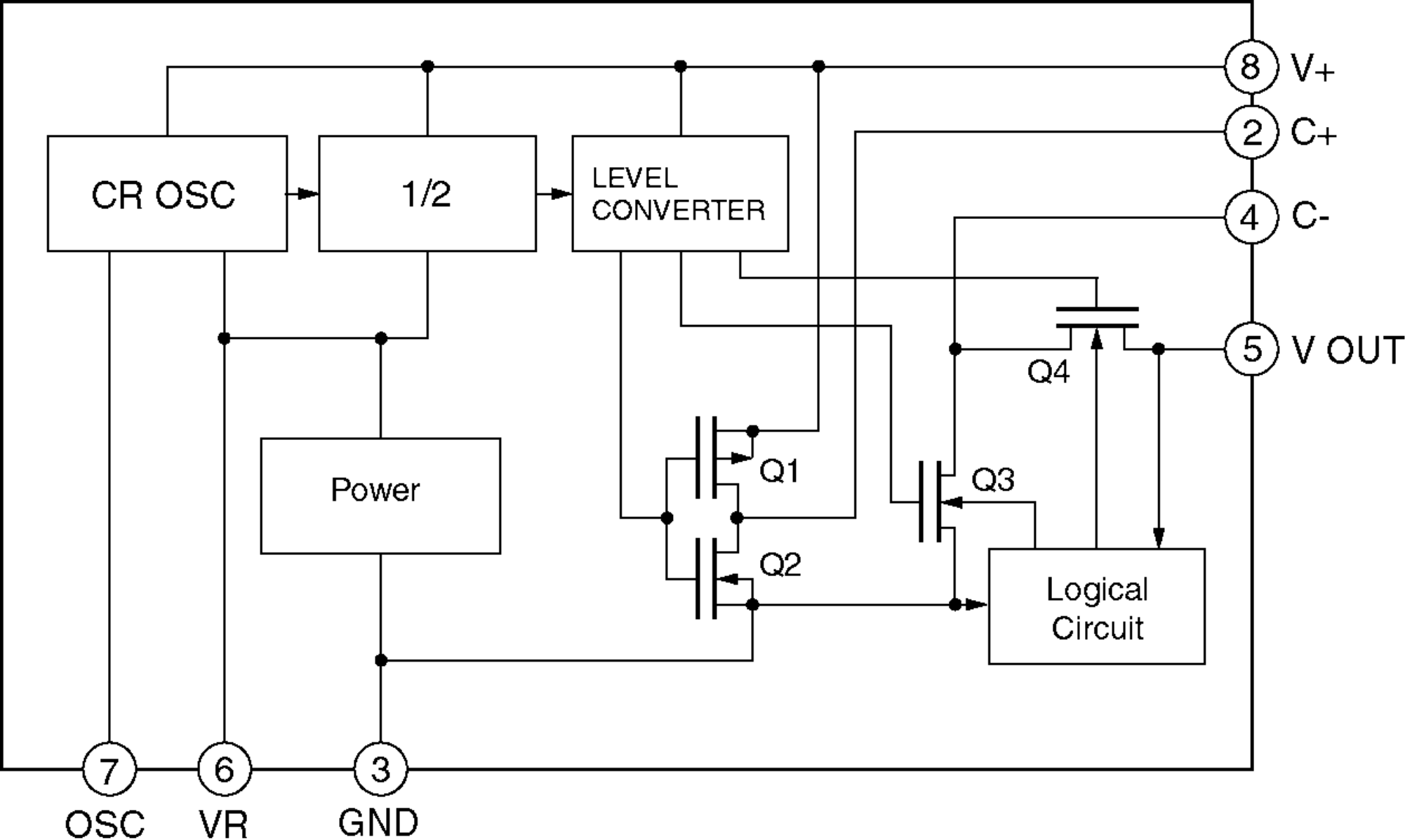
CR OSC
1/2
LEVEL CONVERTER
Power
Q1
Q2
Q3
Q4
Logical Circuit
8
V+
2
C+
4
C-
5
V OUT
7
OSC
6
VR
3
GND

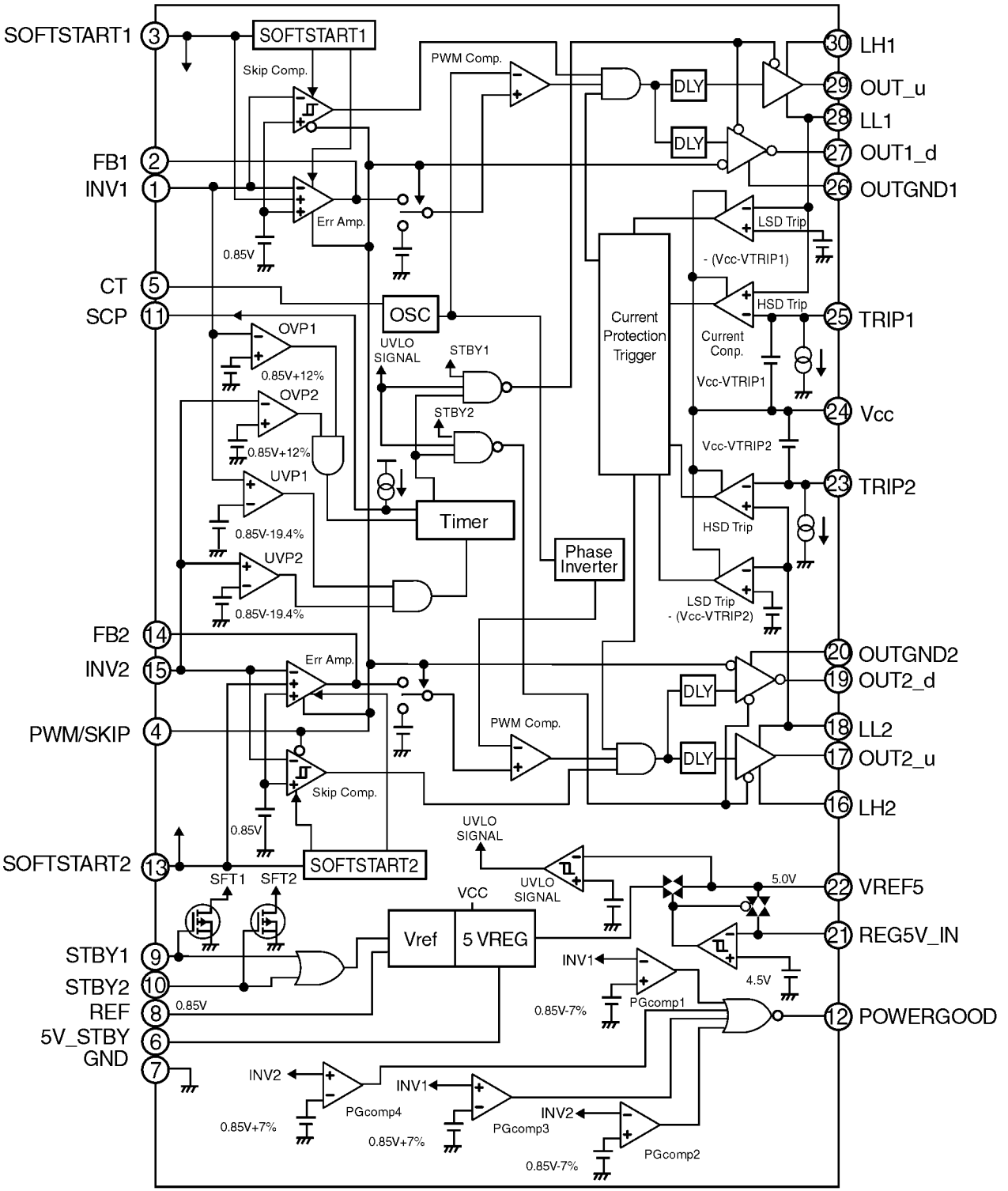
SOFTSTART1
3
SOFTSTART1
Skip Comp.
PWM Comp.
DLY
DLY
30
LH1
29
OUT_u
28
LL1
27
OUT1_d
26
OUTGND1
FB1
2
INV1
1
Err Amp.
0.85V
LSD Trip
- (Vcc-VTRIP1)
CT
5
SCP
11
OSC
HSD Trip
25
TRIP1
Current Protection Trigger
Current Conp.
OVP1
UVLO SIGNAL
STBY1
0.85V+12%
Vcc-VTRIP1
OVP2
STBY2
24
Vcc
0.85V+12%
Vcc-VTRIP2
UVP1
23
TRIP2
Timer
HSD Trip
0.85V-19.4%
UVP2
Phase Inverter
LSD Trip
- (Vcc-VTRIP2)
0.85V-19.4%
FB2
14
INV2
15
Err Amp.
20
OUTGND2
19
OUT2_d
DLY
PWM/SKIP
4
PWM Comp.
18
LL2
DLY
17
OUT2_u
Skip Comp.
16
LH2
0.85V
UVLO SIGNAL
SOFTSTART2
13
SOFTSTART2
SFT1
SFT2
UVLO SIGNAL
5.0V
22
VREF5
VCC
Vref
5 VREG
21
REG5V_IN
STBY1
9
STBY2
10
INV1
4.5V
REF
8
0.85V
0.85V-7%
PGcomp1
12
POWERGOOD
5V_STBY
6
GND
7
INV2
INV1
PGcomp4
INV2
PGcomp3
0.85V+7%
0.85V+7%
PGcomp2
0.85V-7%

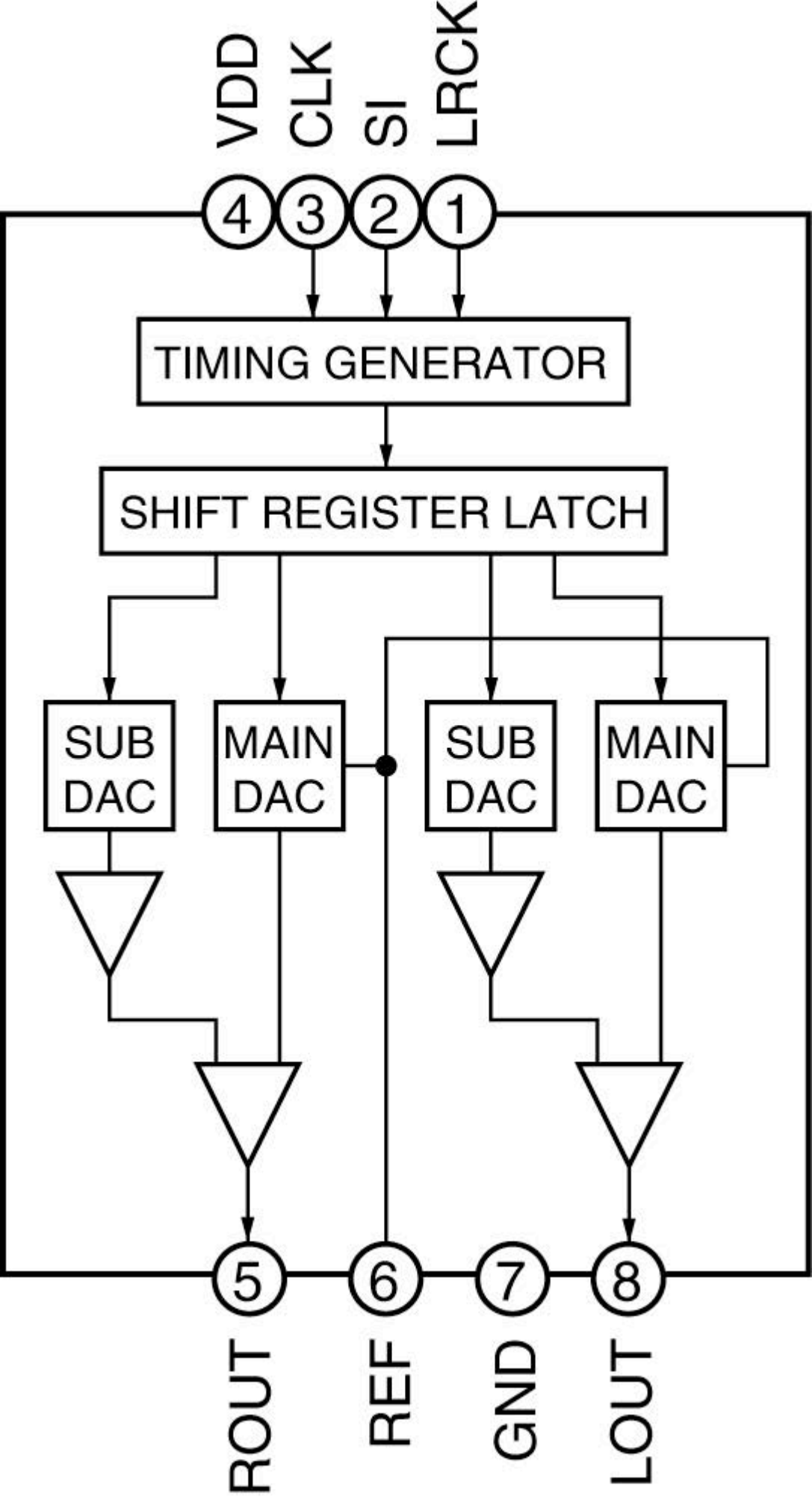
VDD
CLK
SI
LRCK
4
3
2
1
TIMING GENERATOR
SHIFT REGISTER LATCH
SUB DAC
MAIN DAC
SUB DAC
MAIN DAC
5
6
7
8
ROUT
REF
GND
LOUT

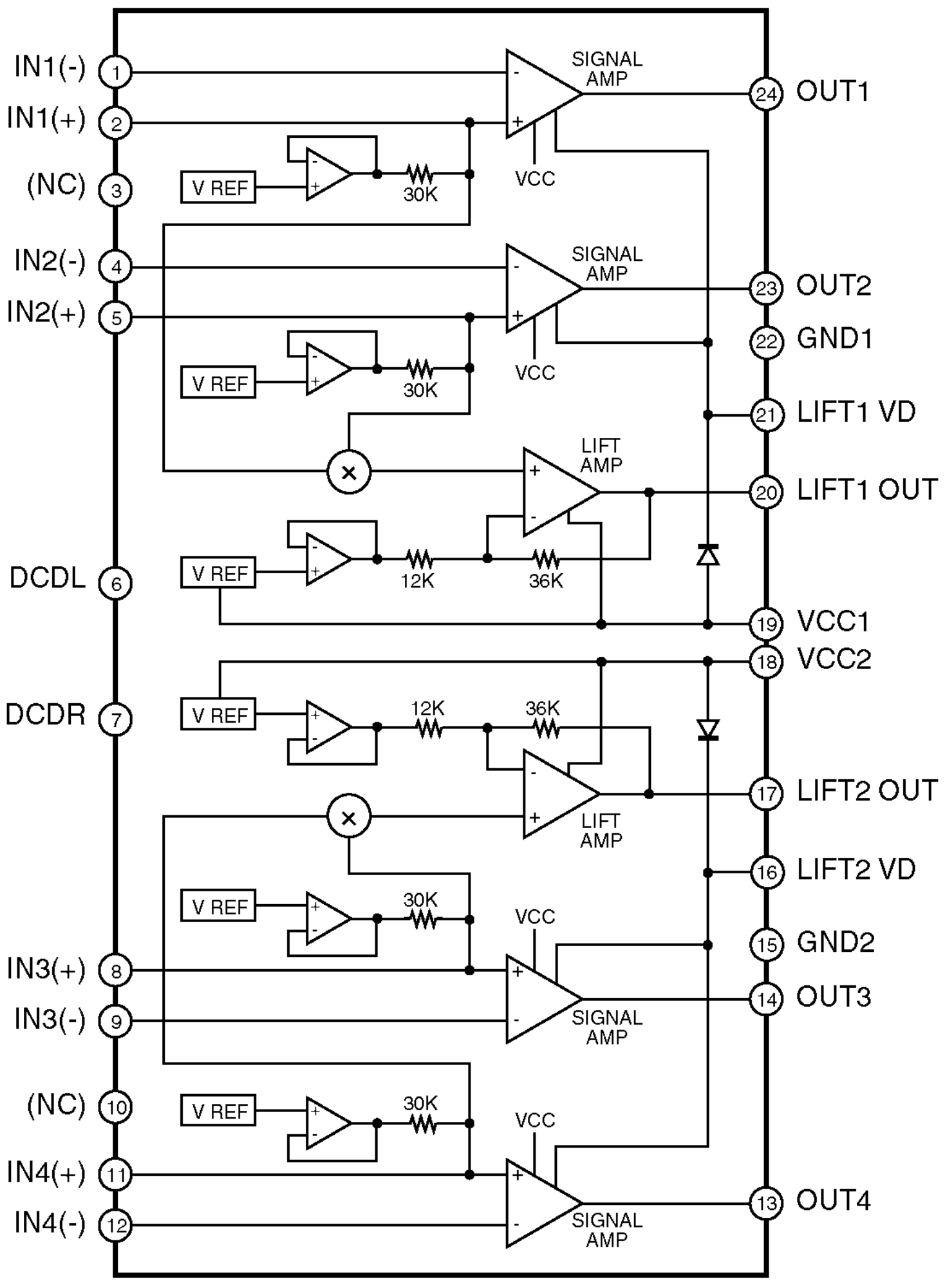
IN1(-)
1
IN1(+)
2
(NC)
3
IN2(-)
4
IN2(+)
5
DCDL
6
DCDR
7
IN3(+)
8
IN3(-)
9
(NC)
10
IN4(+)
11
IN4(-)
12
SIGNAL AMP
VCC
V REF
30K
LIFT AMP
12K
36K
24
OUT1
23
OUT2
22
GND1
21
LIFT1 VD
20
LIFT1 OUT
19
VCC1
18
VCC2
17
LIFT2 OUT
16
LIFT2 VD
15
GND2
14
OUT3
13
OUT4

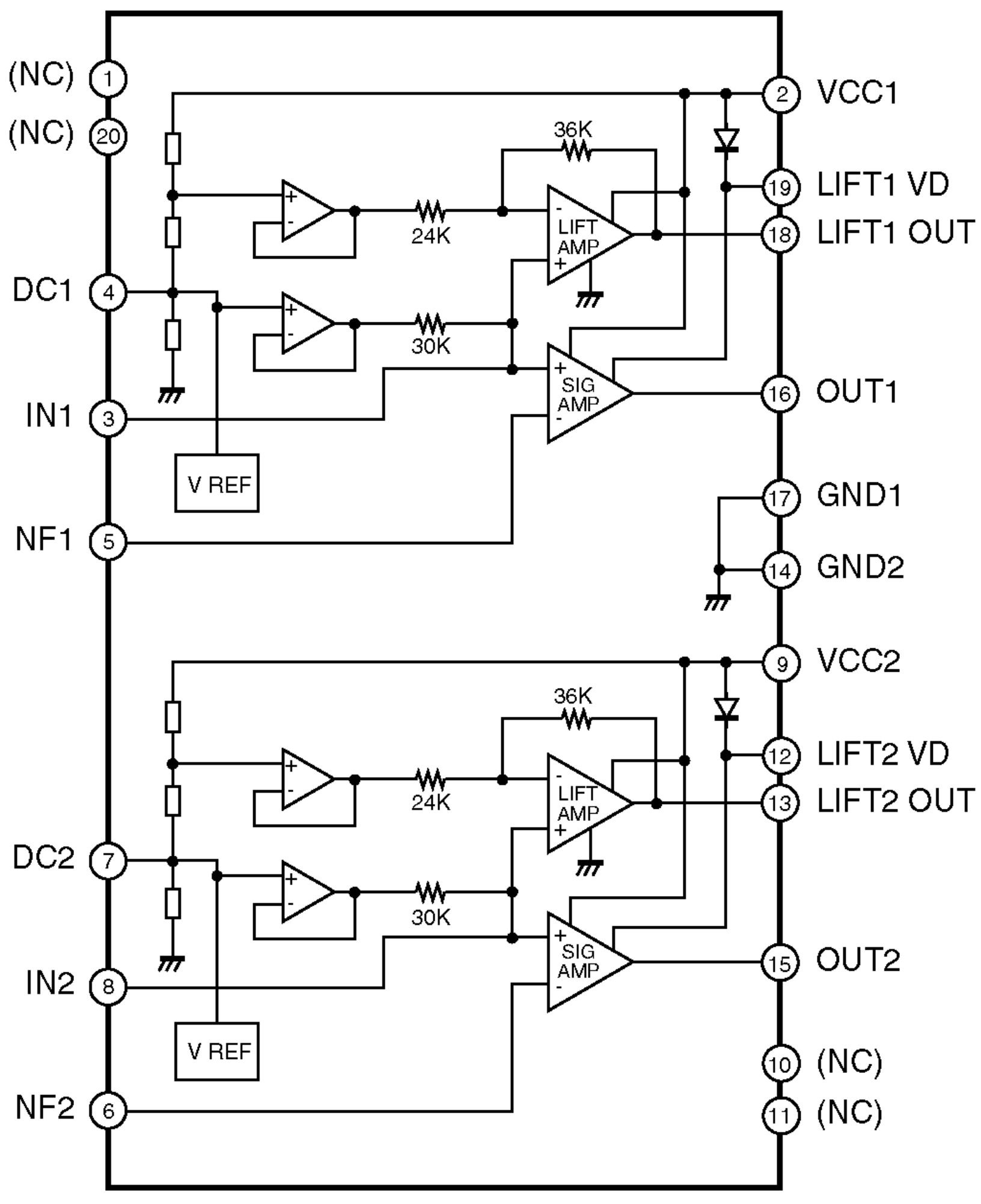
(NC) 1
(NC) 20
DC1 4
IN1 3
NF1 5
DC2 7
IN2 8
NF2 6
2 VCC1
19 LIFT1 VD
18 LIFT1 OUT
16 OUT1
17 GND1
14 GND2
9 VCC2
12 LIFT2 VD
13 LIFT2 OUT
15 OUT2
10 (NC)
11 (NC)
36K
24K
30K
LIFT AMP
SIG AMP
V REF
36K
24K
30K
LIFT AMP
SIG AMP
V REF

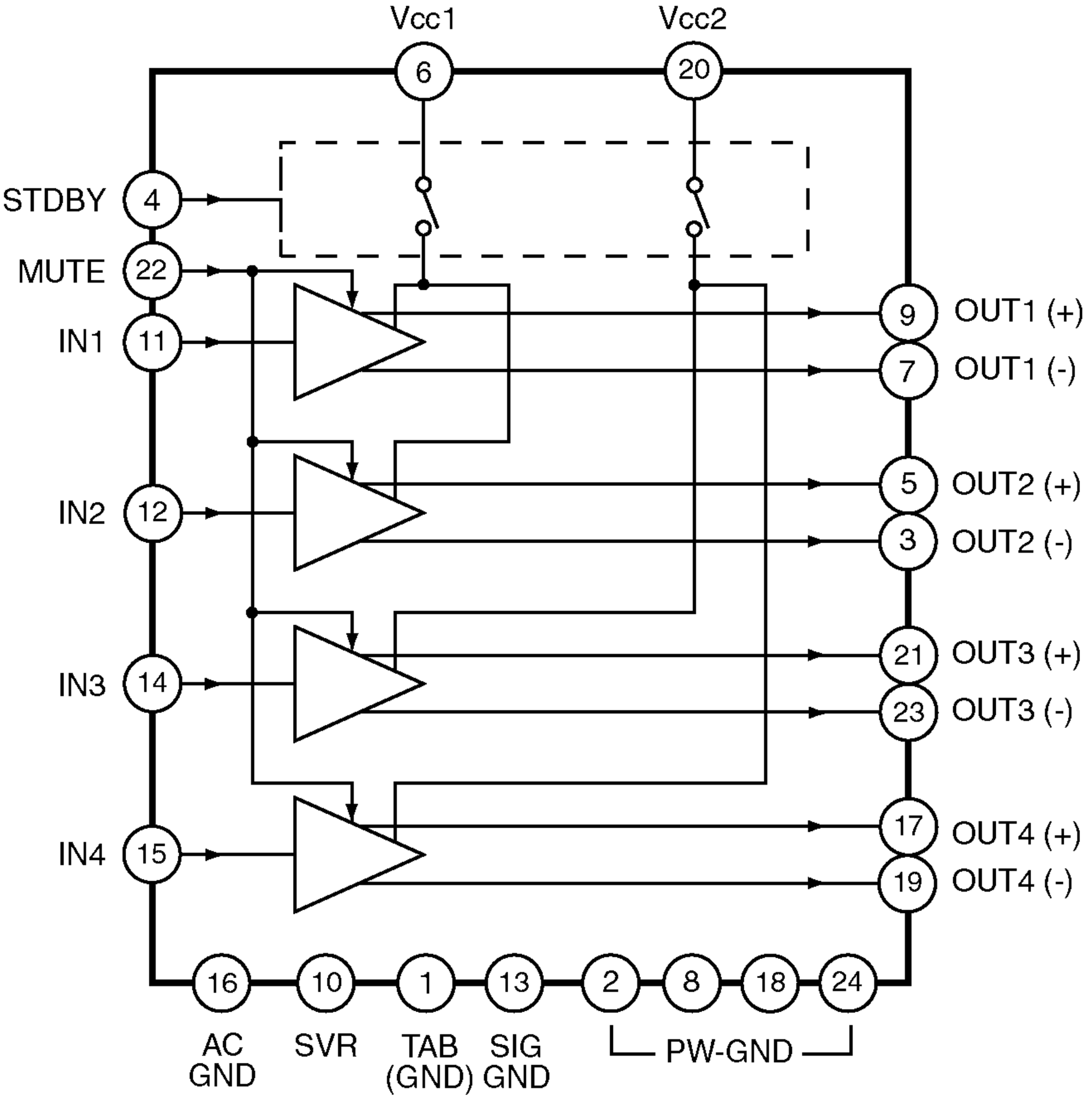
Vcc1
Vcc2
6
20
STDBY
4
MUTE
22
IN1
11
IN2
12
IN3
14
IN4
15
9
OUT1 (+)
7
OUT1 (-)
5
OUT2 (+)
3
OUT2 (-)
21
OUT3 (+)
23
OUT3 (-)
17
OUT4 (+)
19
OUT4 (-)
16
10
1
13
2
8
18
24
AC GND
SVR
TAB (GND)
SIG GND
PW-GND

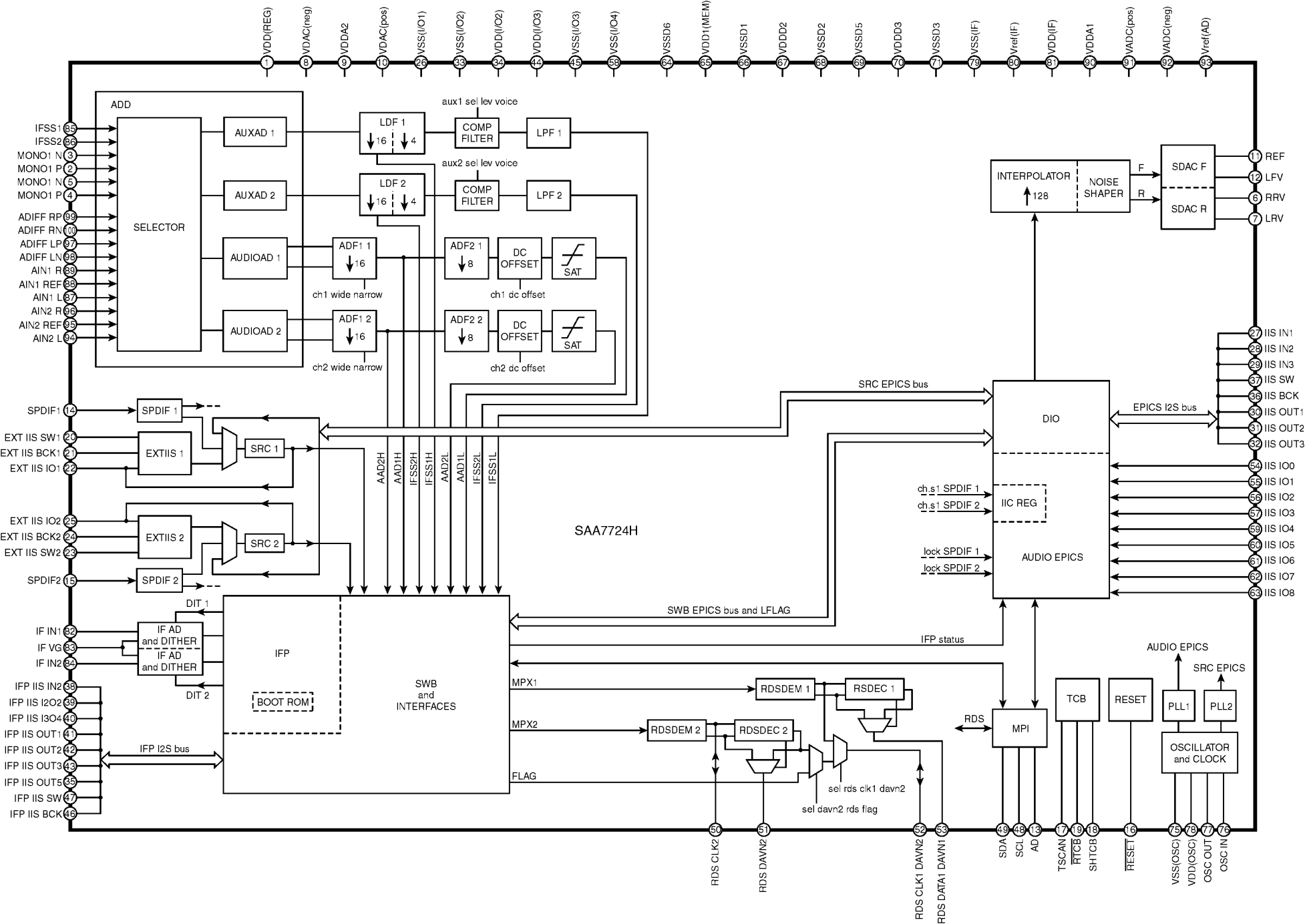
VDD(REG) 1
VDAC(neg) 8
VDDA2 9
VDAC(pos) 10
VSS(I/O1) 26
VSS(I/O2) 33
VDD(I/O2) 34
VDD(I/O3) 44
VSS(I/O3) 45
VSS(I/O4) 58
VSSD6 64
VDD1(MEM) 65
VSSD1 66
VDDD2 67
VSSD2 68
VSSD5 69
VDDD3 70
VSSD3 71
VSS(IF) 79
Vref(IF) 80
VDD(IF) 81
VDDA1 90
VADC(pos) 91
VADC(neg) 92
Vref(AD) 93
ADD
SELECTOR
AUXAD 1
AUXAD 2
AUDIOAD 1
AUDIOAD 2
LDF 1
LDF 2
16
4
aux1 sel lev voice
aux2 sel lev voice
COMP FILTER
LPF 1
LPF 2
ADF1 1
ADF1 2
ADF2 1
ADF2 2
8
DC OFFSET
SAT
ch1 wide narrow
ch2 wide narrow
ch1 dc offset
ch2 dc offset
IFSS1 85
IFSS2 86
MONO1 N 3
MONO1 P 2
MONO1 N 5
MONO1 P 4
ADIFF RP 99
ADIFF RN 100
ADIFF LP 97
ADIFF LN 98
AIN1 R 89
AIN1 REF 88
AIN1 L 87
AIN2 R 96
AIN2 REF 95
AIN2 L 94
SPDIF1 14
SPDIF 1
EXT IIS SW1 20
EXT IIS BCK1 21
EXT IIS IO1 22
EXTIIS 1
SRC 1
EXT IIS IO2 25
EXT IIS BCK2 24
EXT IIS SW2 23
EXTIIS 2
SRC 2
SPDIF2 15
SPDIF 2
AAD2H
AAD1H
IFSS2H
IFSS1H
AAD2L
AAD1L
IFSS2L
IFSS1L
SAA7724H
SRC EPICS bus
DIO
EPICS I2S bus
INTERPOLATOR
128
NOISE SHAPER
F
R
SDAC F
SDAC R
REF 11
LFV 12
RRV 6
LRV 7
IIS IN1 27
IIS IN2 28
IIS IN3 29
IIS SW 37
IIS BCK 36
IIS OUT1 30
IIS OUT2 31
IIS OUT3 32
IIS IO0 54
IIS IO1 55
IIS IO2 56
IIS IO3 57
IIS IO4 59
IIS IO5 60
IIS IO6 61
IIS IO7 62
IIS IO8 63
ch.s1 SPDIF 1
ch.s1 SPDIF 2
IIC REG
lock SPDIF 1
lock SPDIF 2
AUDIO EPICS
SWB EPICS bus and LFLAG
IFP status
DIT 1
IF IN1 82
IF VG 83
IF IN2 84
IF AD and DITHER
IF AD and DITHER
DIT 2
IFP
BOOT ROM
SWB and INTERFACES
IFP IIS IN2 38
IFP IIS I2O2 39
IFP IIS I3O4 40
IFP IIS OUT1 41
IFP IIS OUT2 42
IFP IIS OUT3 43
IFP IIS OUT5 35
IFP IIS SW 47
IFP IIS BCK 46
IFP I2S bus
MPX1
MPX2
FLAG
RDSDEM 1
RSDEC 1
RDSDEM 2
RDSDEC 2
sel rds clk1 davn2
sel davn2 rds flag
RDS
MPI
TCB
RESET
PLL1
PLL2
AUDIO EPICS
SRC EPICS
OSCILLATOR and CLOCK
RDS CLK2 50
RDS DAVN2 51
RDS CLK1 DAVN2 52
RDS DATA1 DAVN1 53
SDA 49
SCL 48
AD 13
TSCAN 17
RTCB 19
SHTCB 18
RESET 16
VSS(OSC) 75
VDD(OSC) 78
OSC OUT 77
OSC IN 76

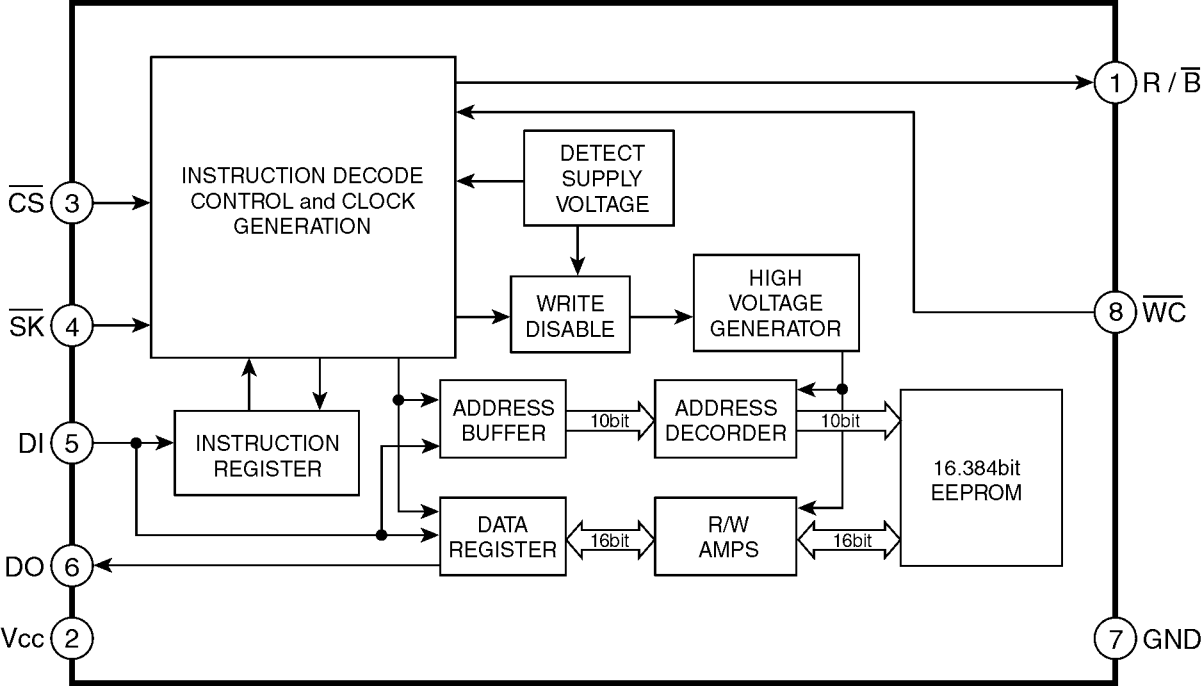
INSTRUCTION DECODE CONTROL and CLOCK GENERATION
DETECT SUPPLY VOLTAGE
WRITE DISABLE
HIGH VOLTAGE GENERATOR
ADDRESS BUFFER
10bit
ADDRESS DECORDER
10bit
16.384bit EEPROM
INSTRUCTION REGISTER
DATA REGISTER
16bit
R/W AMPS
16bit
CS 3
SK 4
DI 5
DO 6
Vcc 2
1 R / B
8 WC
7 GND

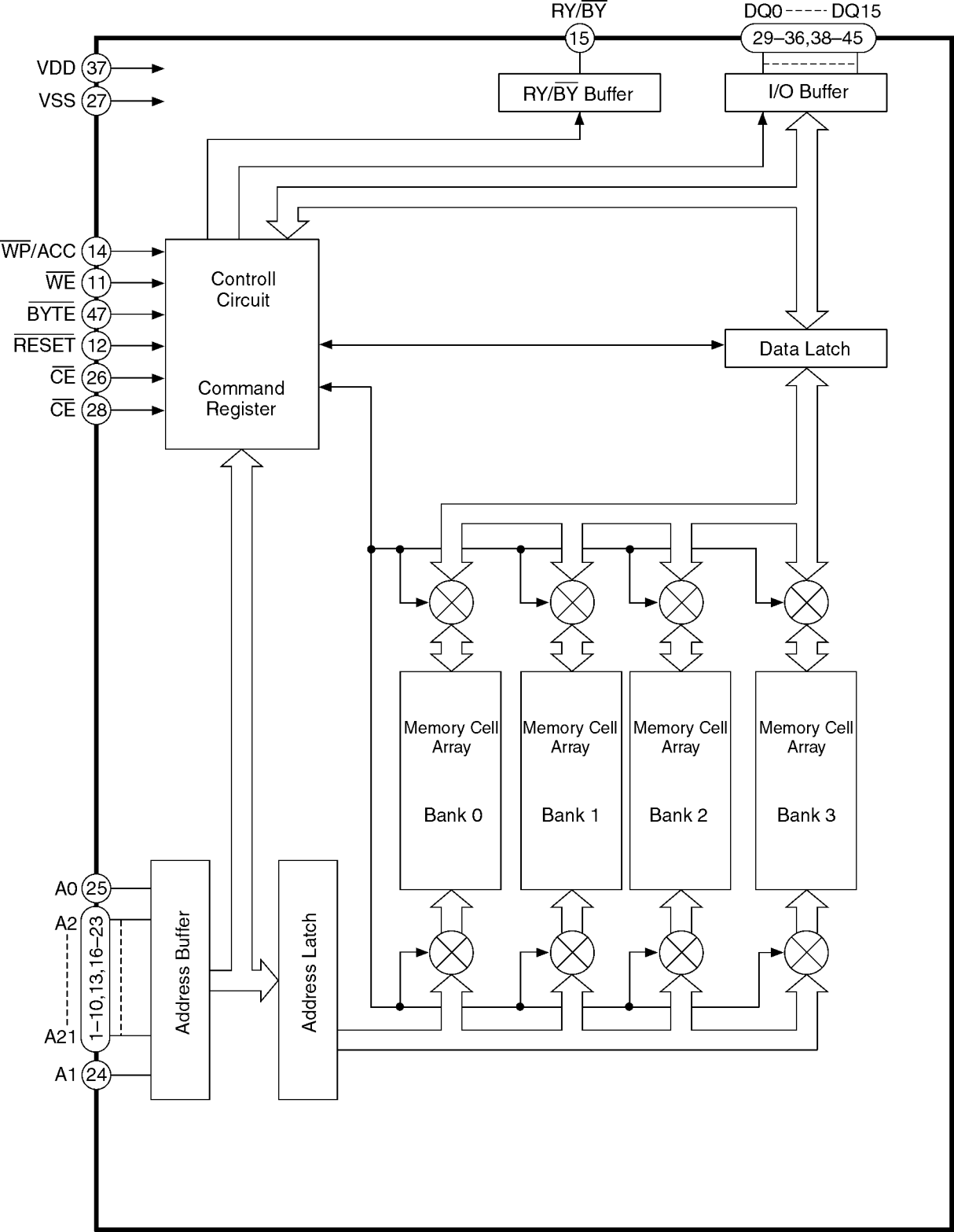
RY/BY
15
DQ0 ----- DQ15
29–36,38–45
VDD 37
VSS 27
RY/BY Buffer
I/O Buffer
WP/ACC 14
WE 11
BYTE 47
RESET 12
CE 26
CE 28
Controll Circuit
Command Register
Data Latch
Memory Cell Array
Bank 0
Memory Cell Array
Bank 1
Memory Cell Array
Bank 2
Memory Cell Array
Bank 3
A0 25
A2
A21
1–10,13,16–23
A1 24
Address Buffer
Address Latch

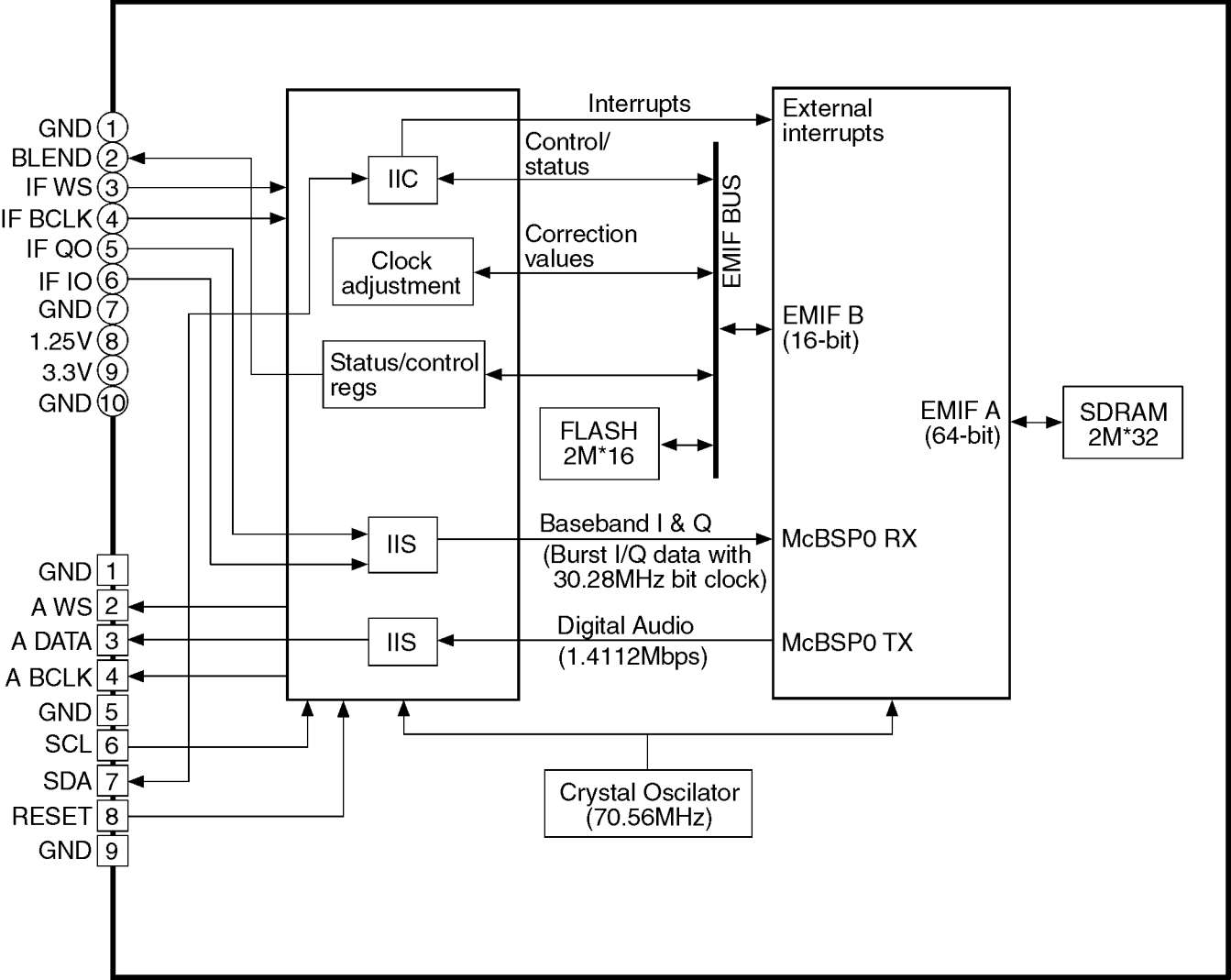
GND 1
BLEND 2
IF WS 3
IF BCLK 4
IF QO 5
IF IO 6
GND 7
1.25V 8
3.3V 9
GND 10
GND 1
A WS 2
A DATA 3
A BCLK 4
GND 5
SCL 6
SDA 7
RESET 8
GND 9
IIC
Clock adjustment
Status/control regs
IIS
IIS
Interrupts
Control/ status
Correction values
EMIF BUS
FLASH 2M*16
Baseband I & Q
(Burst I/Q data with 30.28MHz bit clock)
Digital Audio
(1.4112Mbps)
External interrupts
EMIF B (16-bit)
EMIF A (64-bit)
McBSP0 RX
McBSP0 TX
SDRAM 2M*32
Crystal Oscilator (70.56MHz)

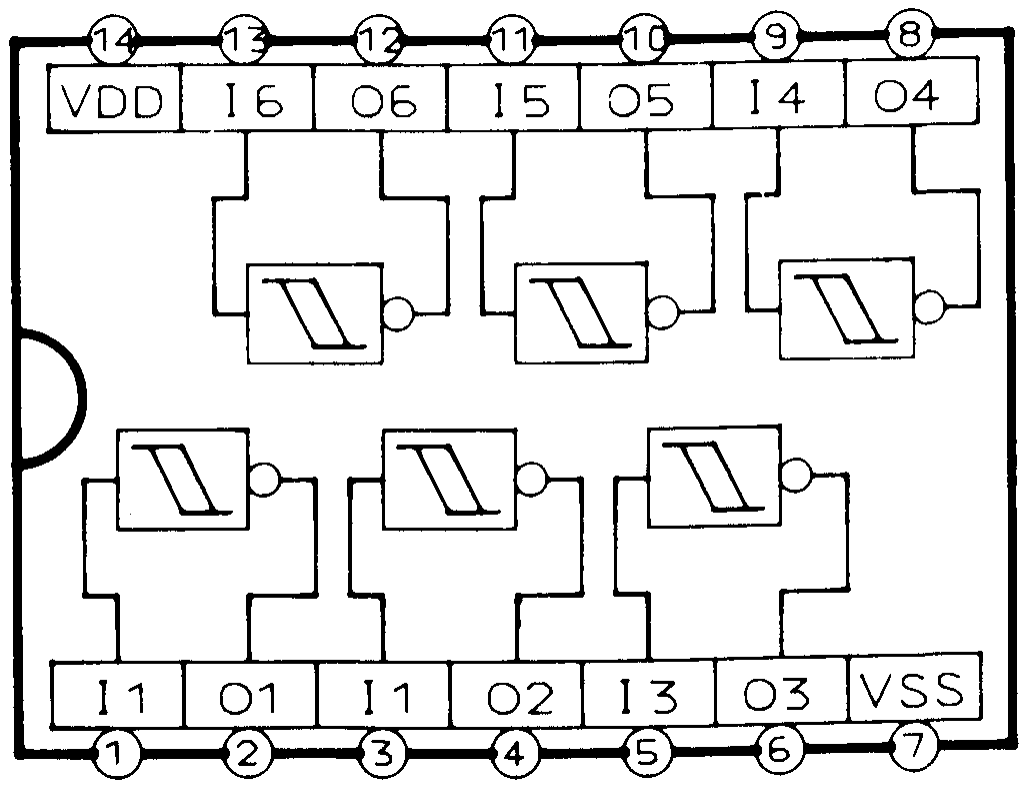
14
13
12
11
10
9
8
VDD
I6
O6
I5
O5
I4
O4
I1
O1
I1
O2
I3
O3
VSS
1
2
3
4
5
6
7

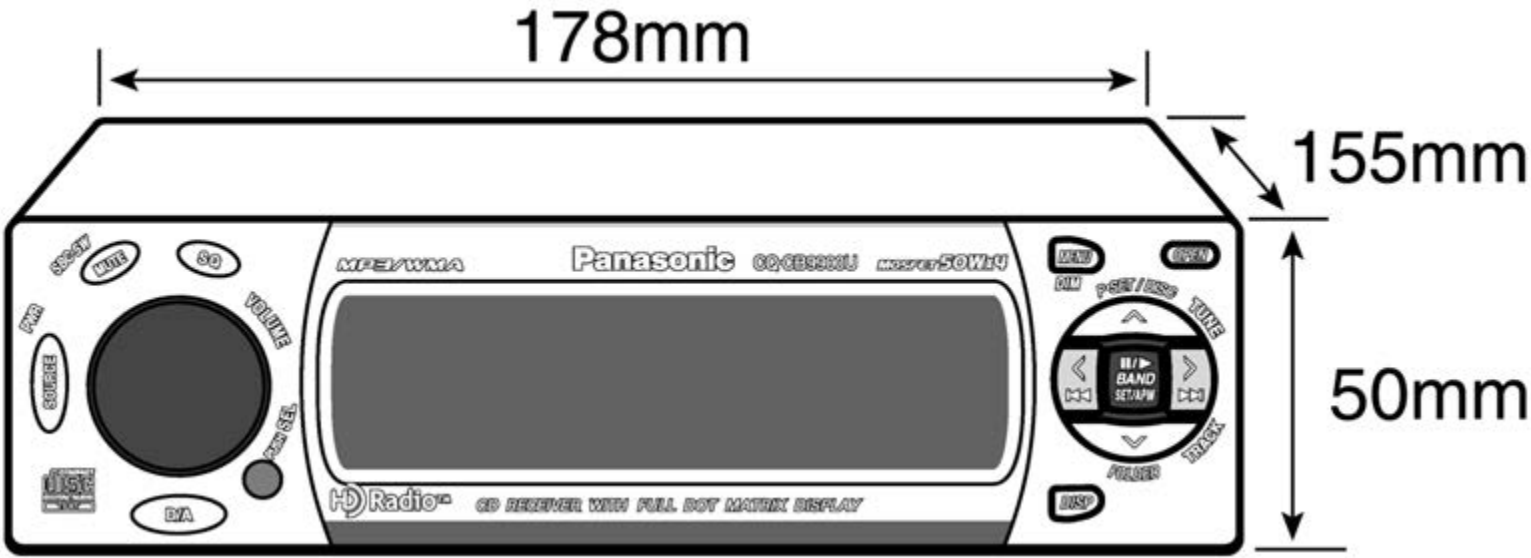
178mm
155mm
50mm
SOFT-SW
MUTE
SQ
PWR
VOLUME
SOURCE
SEL
DISP
D/A
MP3/WMA
Panasonic
CD-CB9980U
MOSFET 50Wx4
MENU
DIM
GRAPH
P-SET/DISC
TUNE
BAND
SET/APW
TRACK
FOLDER
DISP
HD Radio
CD RECEIVER WITH FULL DOT MATRIX DISPLAY

※You have to perform the following procedures to disassemble the unit.
(If you try to disassemble parts by force, the shape may change.)

Should remove the two screws mounting PA52 before removing the Main PCB.

◆Before removing the Main PCB

1. Remove the Removable Face Plate Unit by pressing the OPEN button.

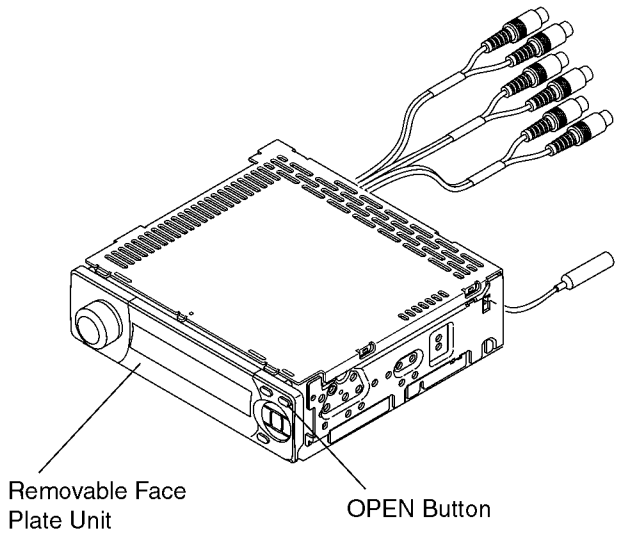

2. Remove the top cover.

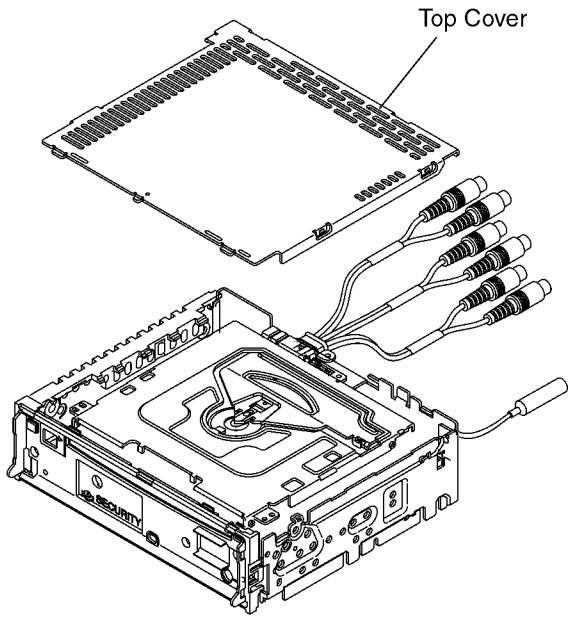

3. Remove the three screws (☆) from the Escutcheon Ass'y, lift up the CD Deck and disconnect the Flexible PCB of CD Deck from CN681 connector on the Main PCB; then remove the CD Deck.

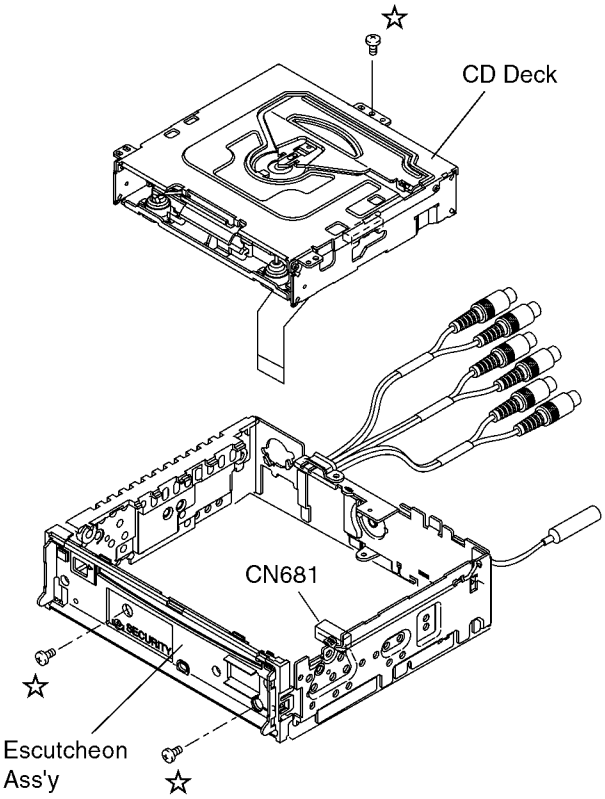

4. Remove the two screws (△) mounting PA52 on the Main PCB.

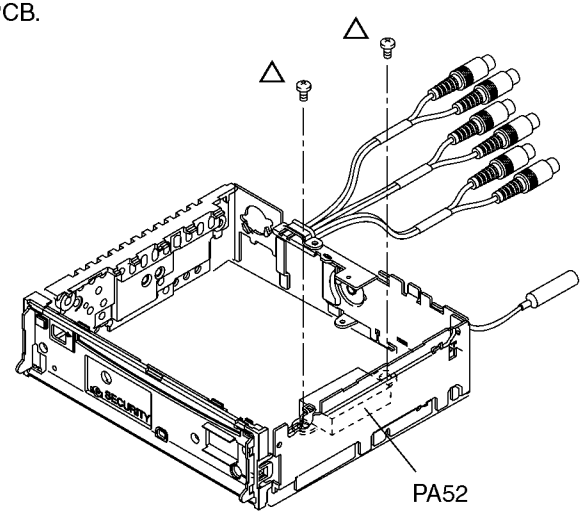

After the upper procedures, begin to disassemble usually the unit.

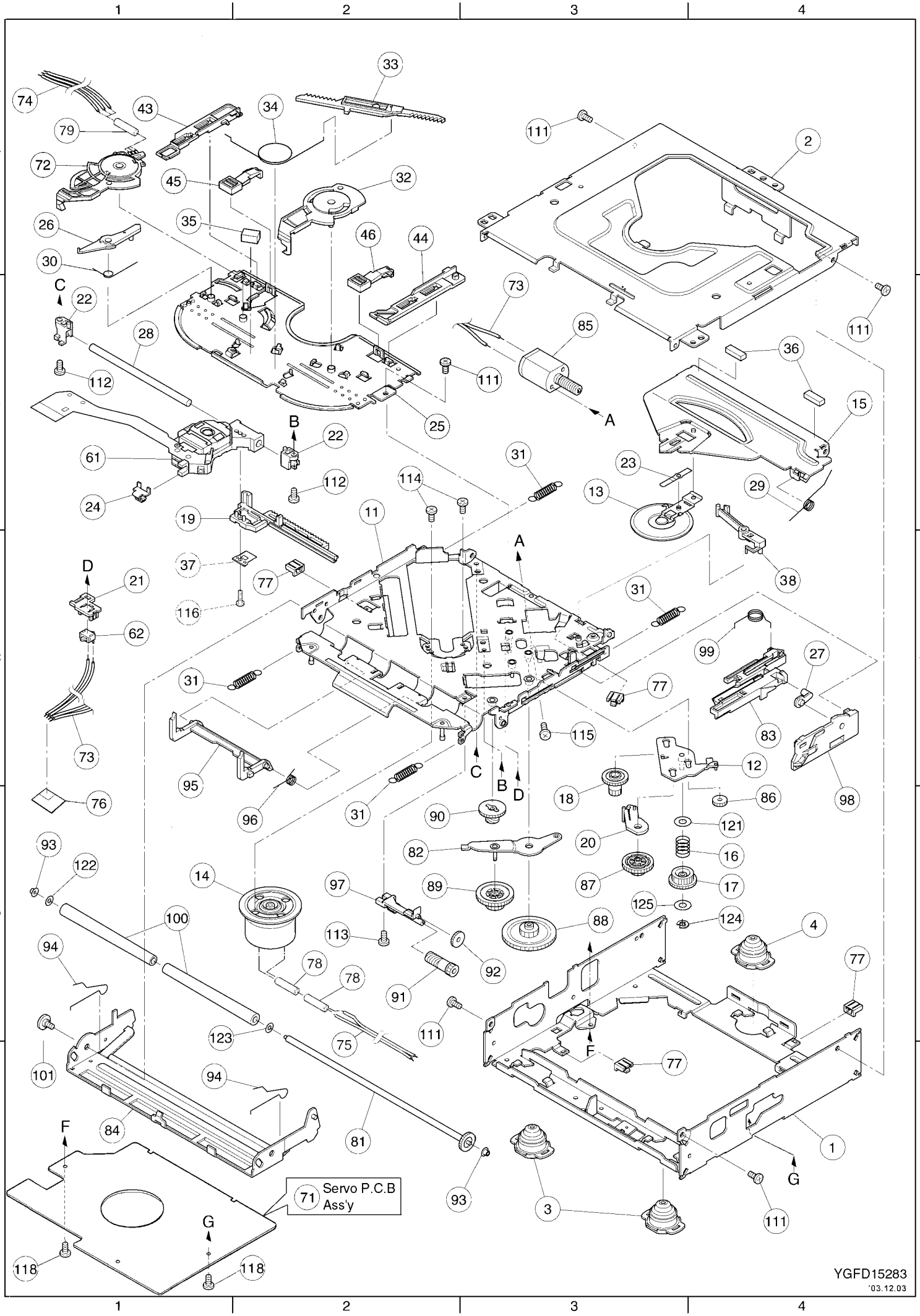
Servo P.C.B Ass'y
YGFD15283
'03.12.03

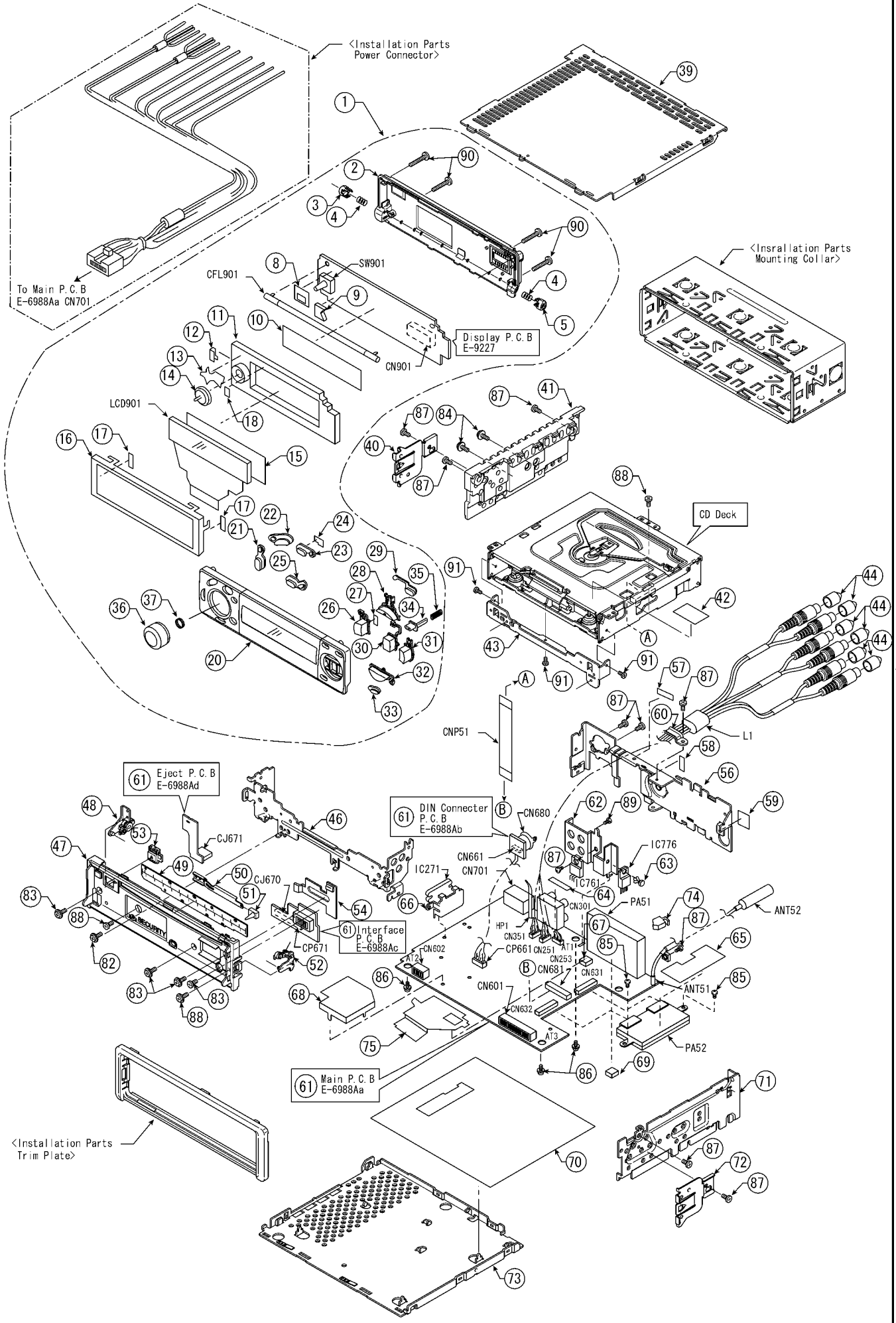
<Installation Parts Power Connector>
To Main P.C.B E-6988Aa CN701
<Insrallation Parts Mounting Collar>
CFL901
SW901
CN901
Display P.C.B E-9227
LCD901
CD Deck
CNP51
L1
Eject P.C.B E-6988Ad
CJ671
CJ670
DIN Connecter P.C.B E-6988Ab
CN680
CN661
CN701
IC271
IC776
IC761
CN301
PA51
ANT52
ANT51
HP1
CN351
CN251
CP661
CN253
CN681
CN631
CN601
CN632
CN602
AT1
AT2
AT3
Interface P.C.B E-6988Ac
CP671
Main P.C.B E-6988Aa
PA52
<Installation Parts Trim Plate>

CQ-CB9900U

CAUTION:

This product utilizes a laser diode with the unit turned "on", laser radiation is emitted from the pickup lens.

Laser radiation from the pickup lens is safety level, but be sure the followings:

1. Do not disassemble the optical pickup unit, since radiation from exposed laser diode is dangerous.
2. Do not adjust the variable resistor on the pickup unit. It was already adjusted.
3. Do not look at the focus lens using optical instruments.
4. Recommend not to look at pickup lens for a long time.

DANGER! Visible and invisible laser radiation when open. Avoid direct exposure to beam.

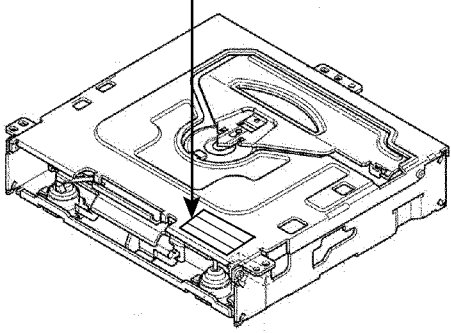

Deck Ass'y (Upper Side)

Caution

This Product utilizes a laser.

Use of controls or adjustments or performance of procedures other than those specified herein may result in hazardous radiation exposure.

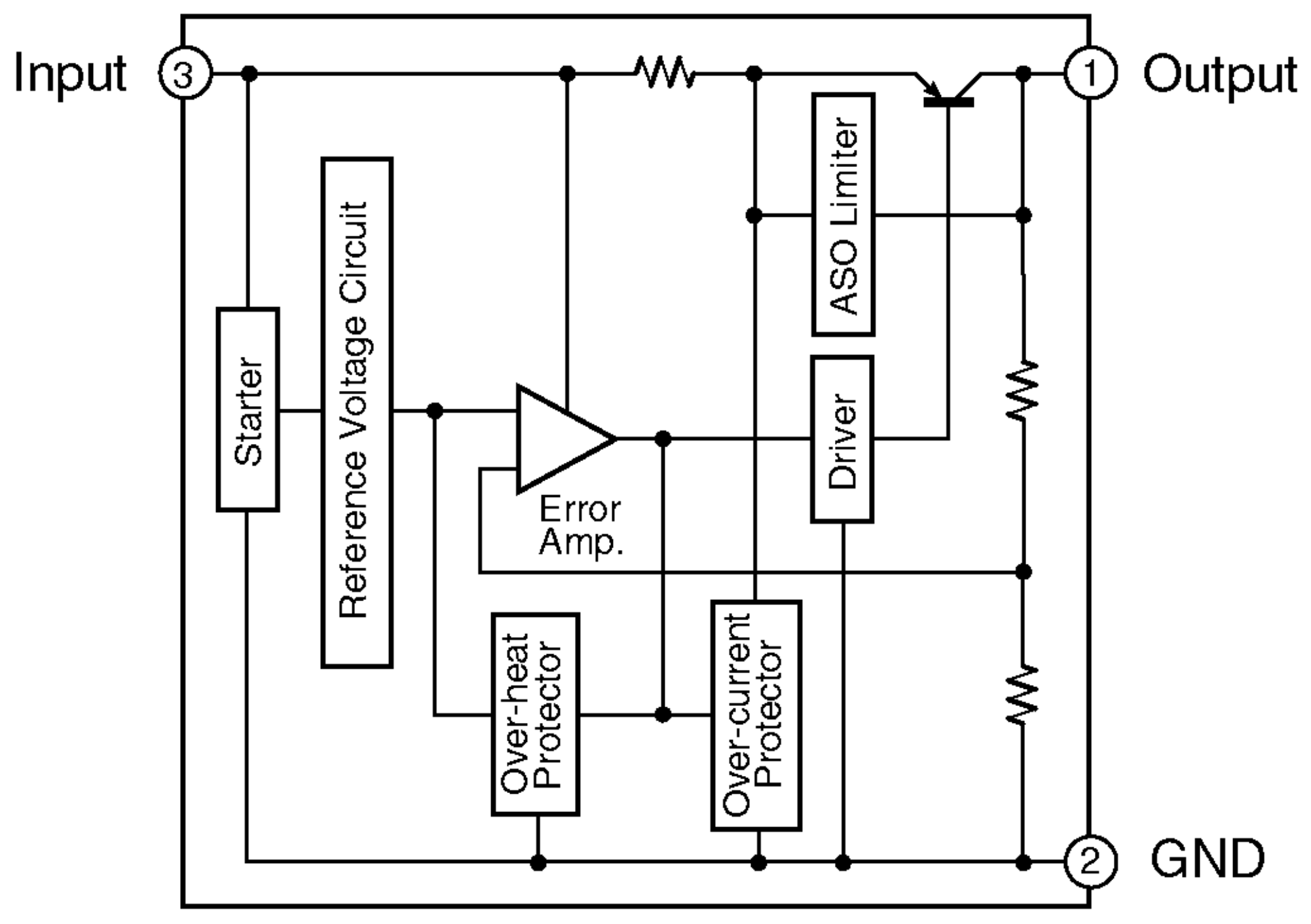
Input
3
1
Output
Starter
Reference Voltage Circuit
Error
Amp.
ASO Limiter
Driver
Over-heat
Protector
Over-current
Protector
2
GND

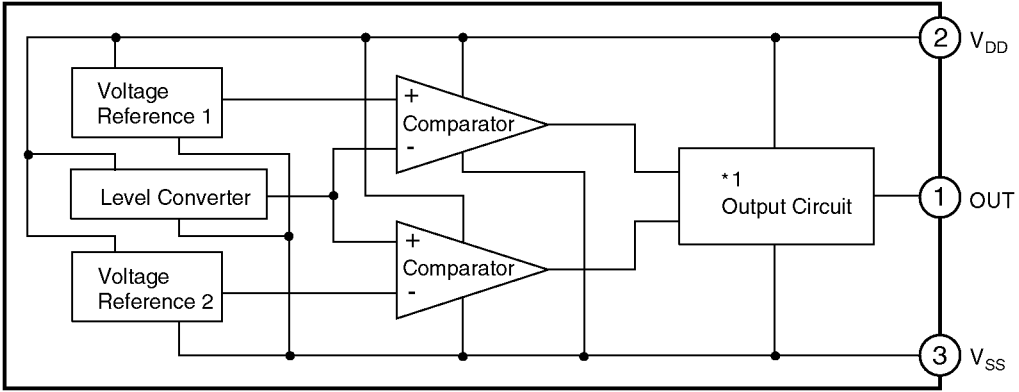
Voltage Reference 1
Level Converter
Voltage Reference 2
+
Comparator
-
+
Comparator
-
*1
Output Circuit
2
V_{DD}
1
OUT
3
V_{SS}

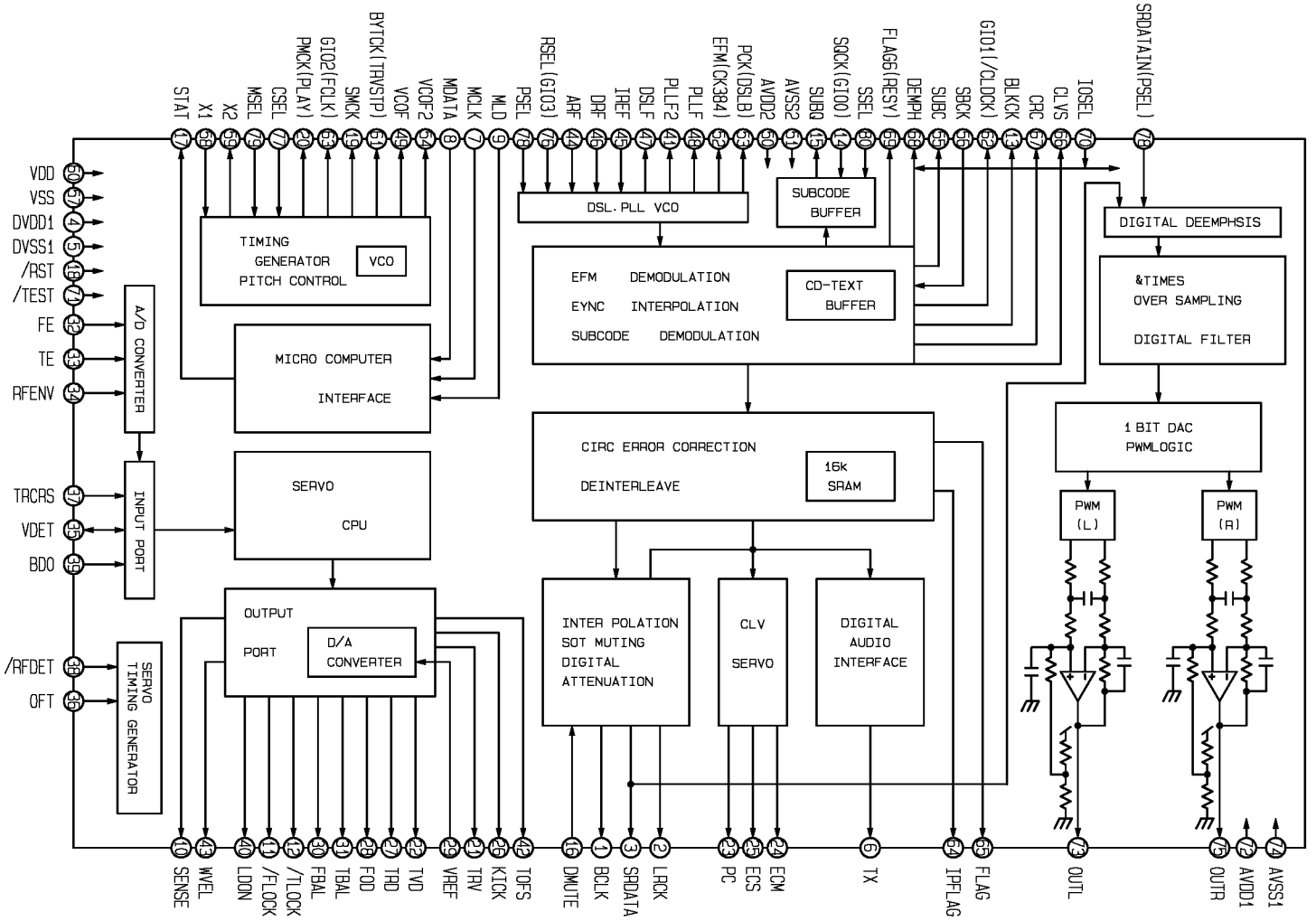
STAT 77
X1 28
X2 29
MSEL 78
CSEL 77
PMCK(PLAY) 20
GIO2(FCLK) 21
SMCK 19
BYTCK(TRVSTP) 31
VCOF 45
VCOF2 44
MDATA 8
MCLK 7
MLD 9
PSEL 78
RSEL(GIO3) 76
ARF 14
DRF 46
IREF 45
DSLF 47
PLLF2 41
PLLF 48
EFM(CK384) 42
PCK(DSLB) 43
AVDD2 30
AVSS2 31
SUBQ 15
SQCK(GIO0) 17
SSEL 80
FLAG6(RESY) 59
DEMPH 58
SUBC 55
SBCK 56
BLKCK 13
CRC 57
CLVS 58
IOSEL 10
SRDATAIN(PSEL) 78
VDD 30
VSS 31
DVDD1 4
DVSS1 5
/RST 16
/TEST 17
FE 32
TE 33
RFENV 34
TRCRS 37
VDET 35
BDO 36
/RFDET 38
OFT 39
TIMING GENERATOR PITCH CONTROL
VCO
DSL. PLL VCO
SUBCODE BUFFER
DIGITAL DEEMPHSIS
EFM DEMODULATION
EYNC INTERPOLATION
SUBCODE DEMODULATION
CD-TEXT BUFFER
&TIMES OVER SAMPLING
DIGITAL FILTER
A/D CONVERTER
MICRO COMPUTER
INTERFACE
CIRC ERROR CORRECTION
DEINTERLEAVE
16k SRAM
1 BIT DAC PWMLOGIC
PWM (L)
PWM (R)
INPUT PORT
SERVO
CPU
OUTPUT PORT
D/A CONVERTER
INTER POLATION SOT MUTING DIGITAL ATTENUATION
CLV SERVO
DIGITAL AUDIO INTERFACE
SERVO TIMING GENERATOR
SENSE 10
WVEL 13
LDON 40
/FLOCK 11
/TLOCK 12
FBAL 30
TBAL 31
FOD 28
TRD 27
TVD 22
VREF 26
TRV 23
KICK 25
TOFS 42
DMUTE 16
BCLK 1
SRDATA 3
LRCK 2
PC 23
ECS 25
ECM 24
TX 6
IPFLAG 64
FLAG 65
OUTL 73
OUTR 75
AVDD1 72
AVSS1 74

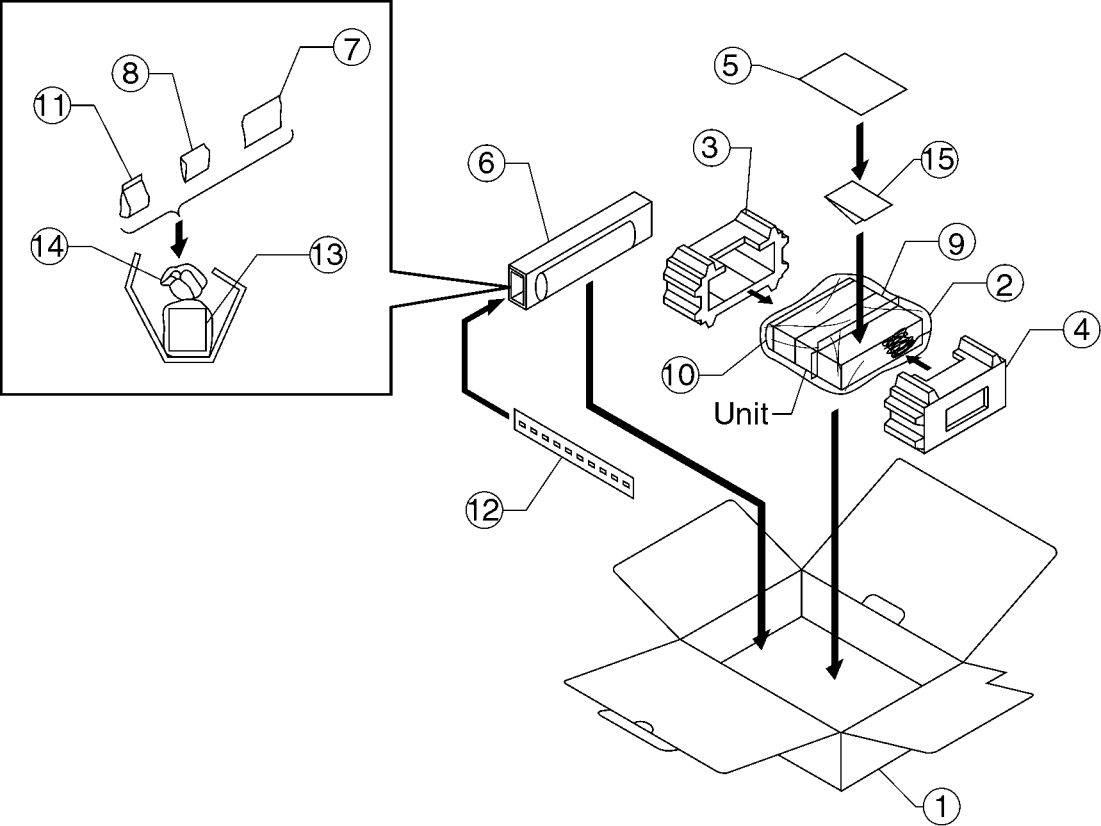
7
8
11
14
13
6
5
3
15
9
2
4
10
Unit
12
1

20.2. Display Block

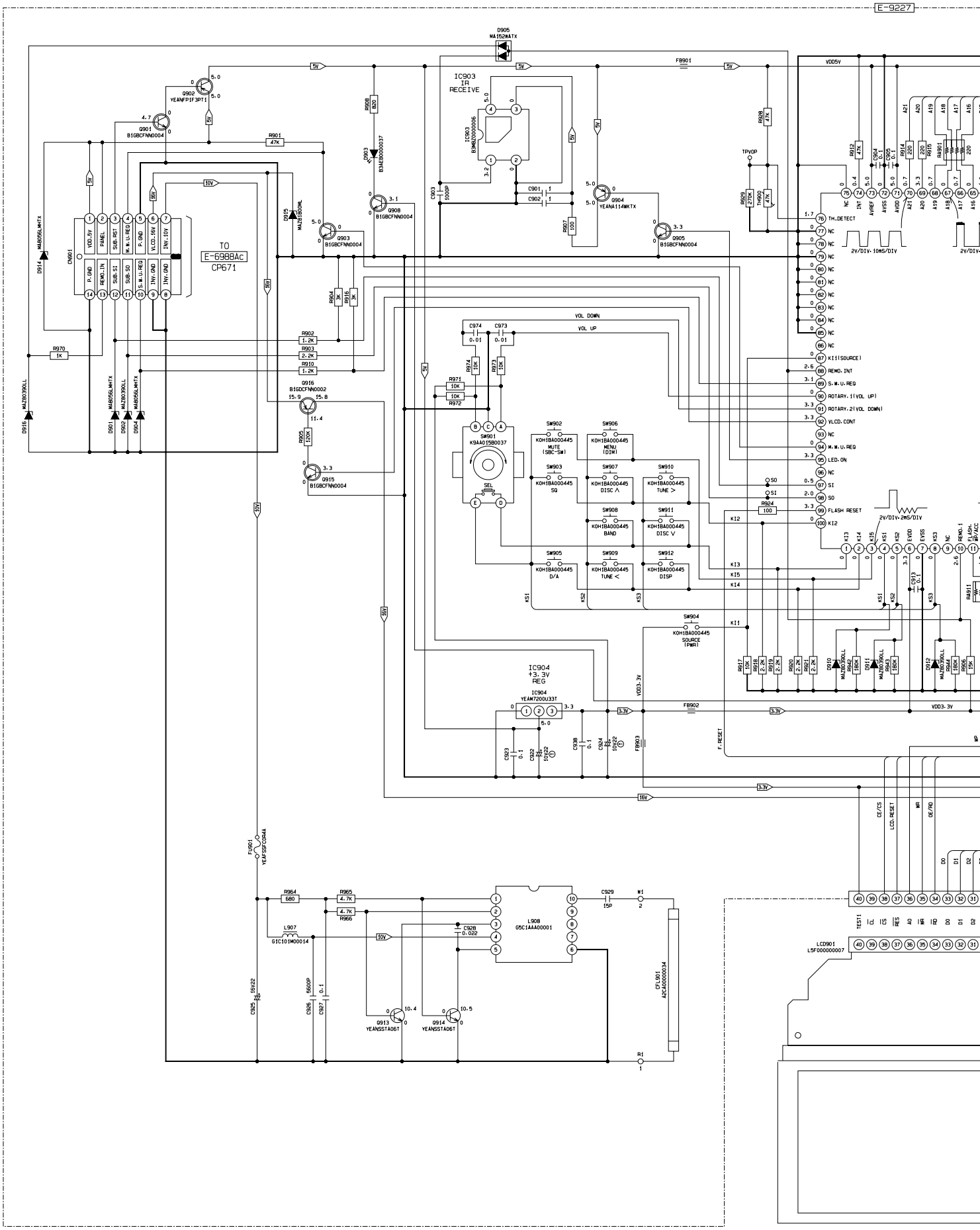

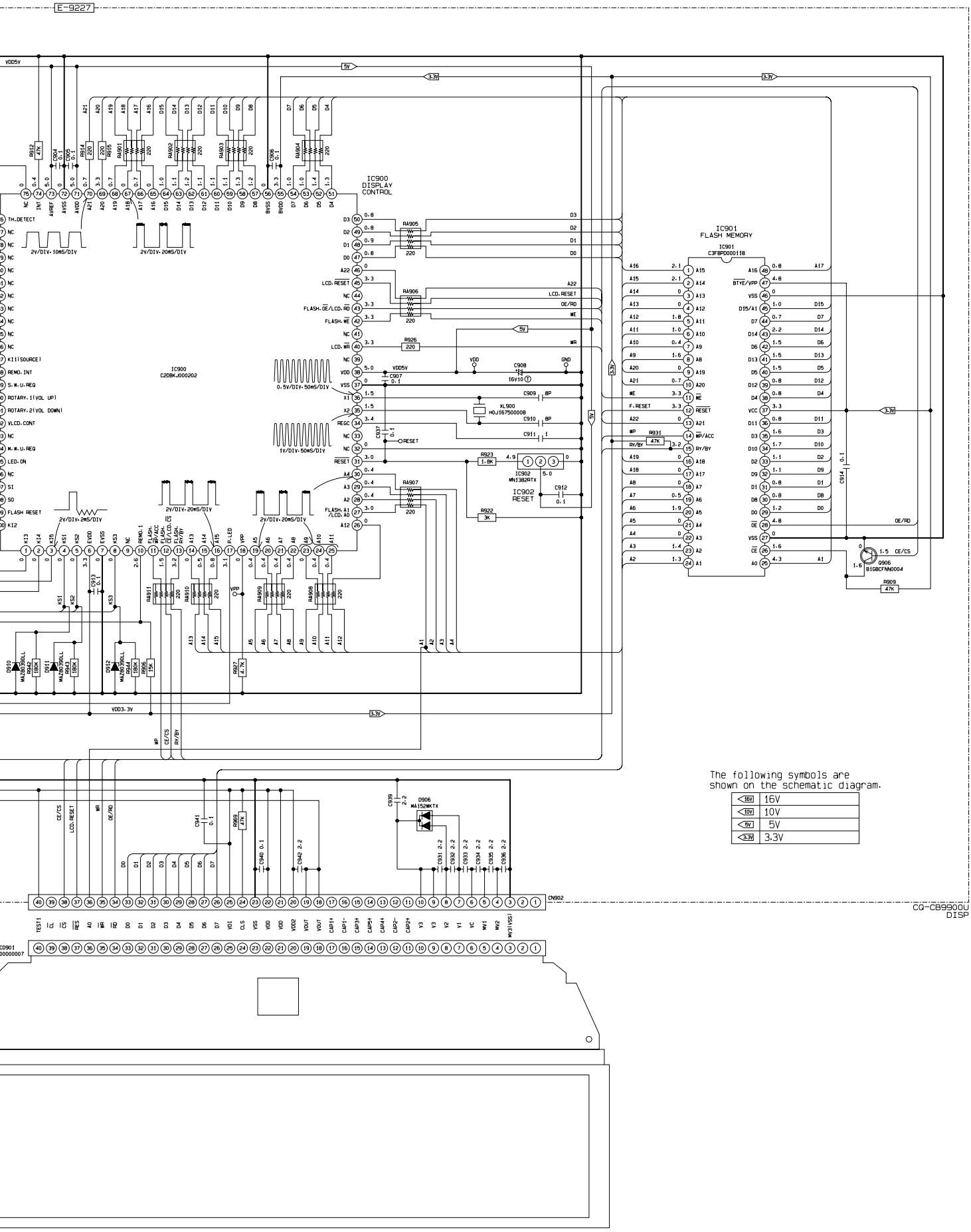
E-9227
IC900
DISPLAY
CONTROL
IC900
C2DBKJ000202
IC901
FLASH MEMORY
IC901
C3FBP0000118
IC902
RESET
IC902
MN1382RTX
XL900
HOJ167500008
Q906
B1GBCPWK0004
CN902
CN901
CO-CB9900U
DISP
The following symbols are
shown on the schematic diagram.
16V 16V
10V 10V
5V 5V
3.3V 3.3V

20.3. CD Servo Block-1

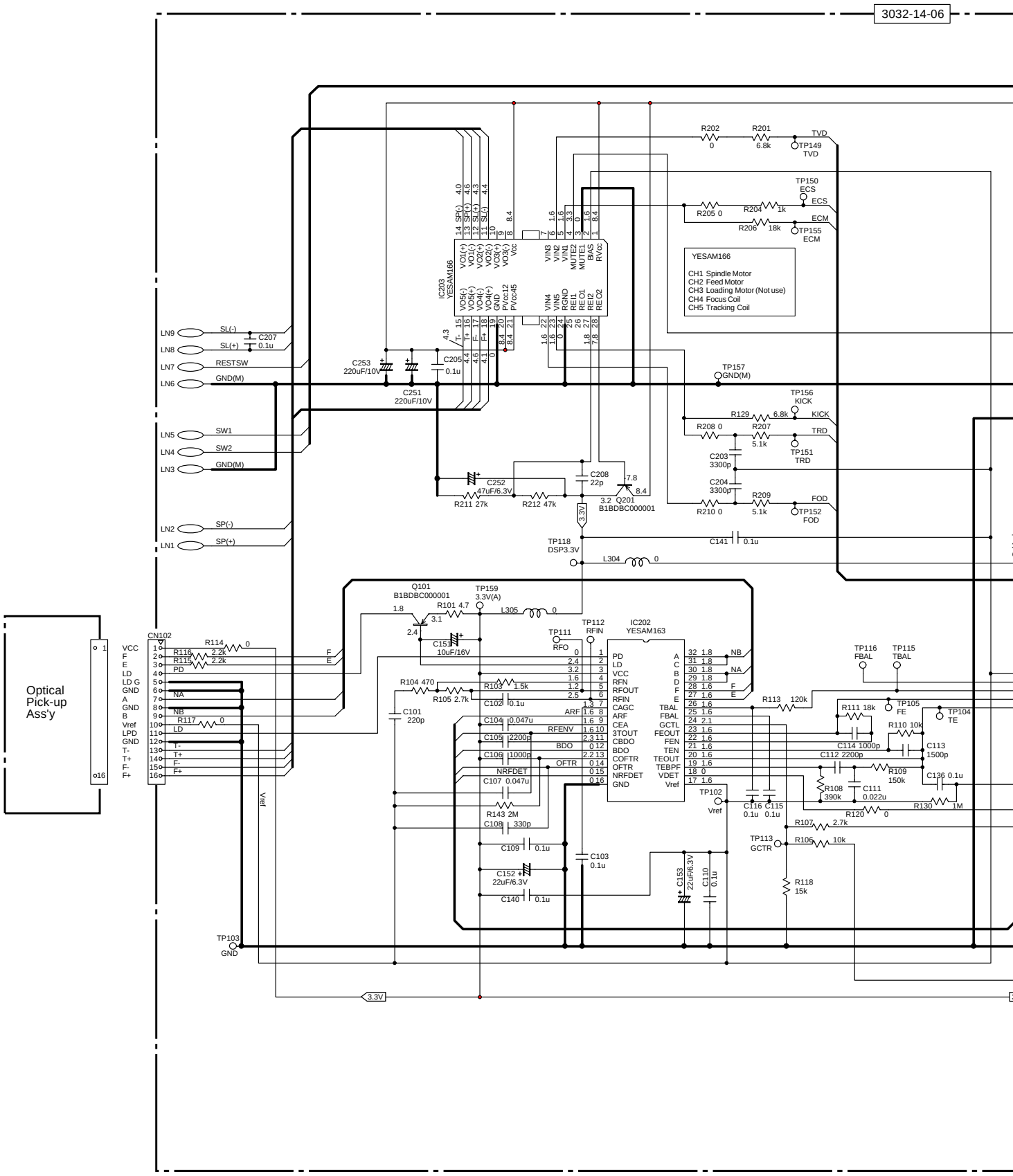

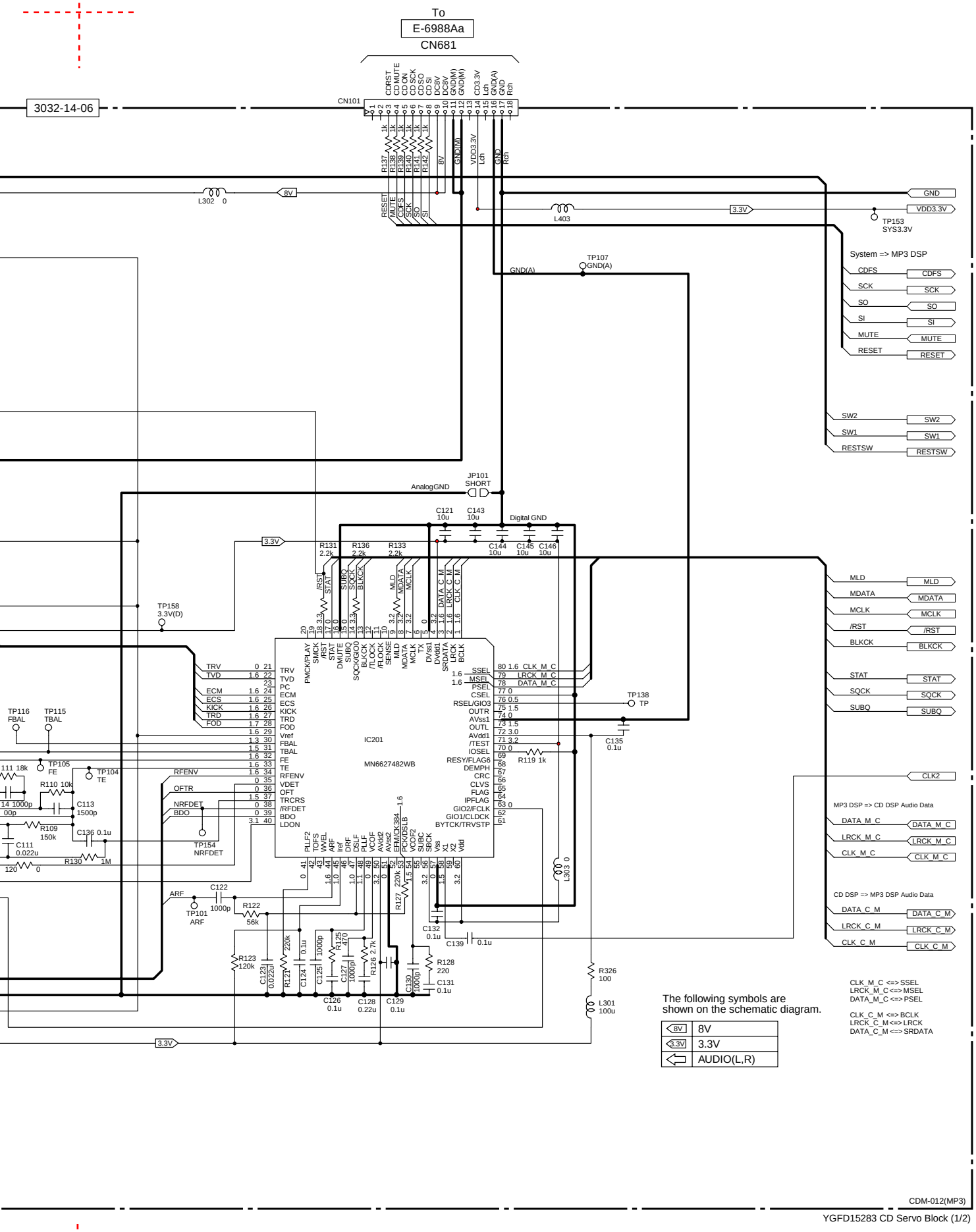

YGFD15283 CD Servo Block (1/2)

20.4. CD Servo Block-2

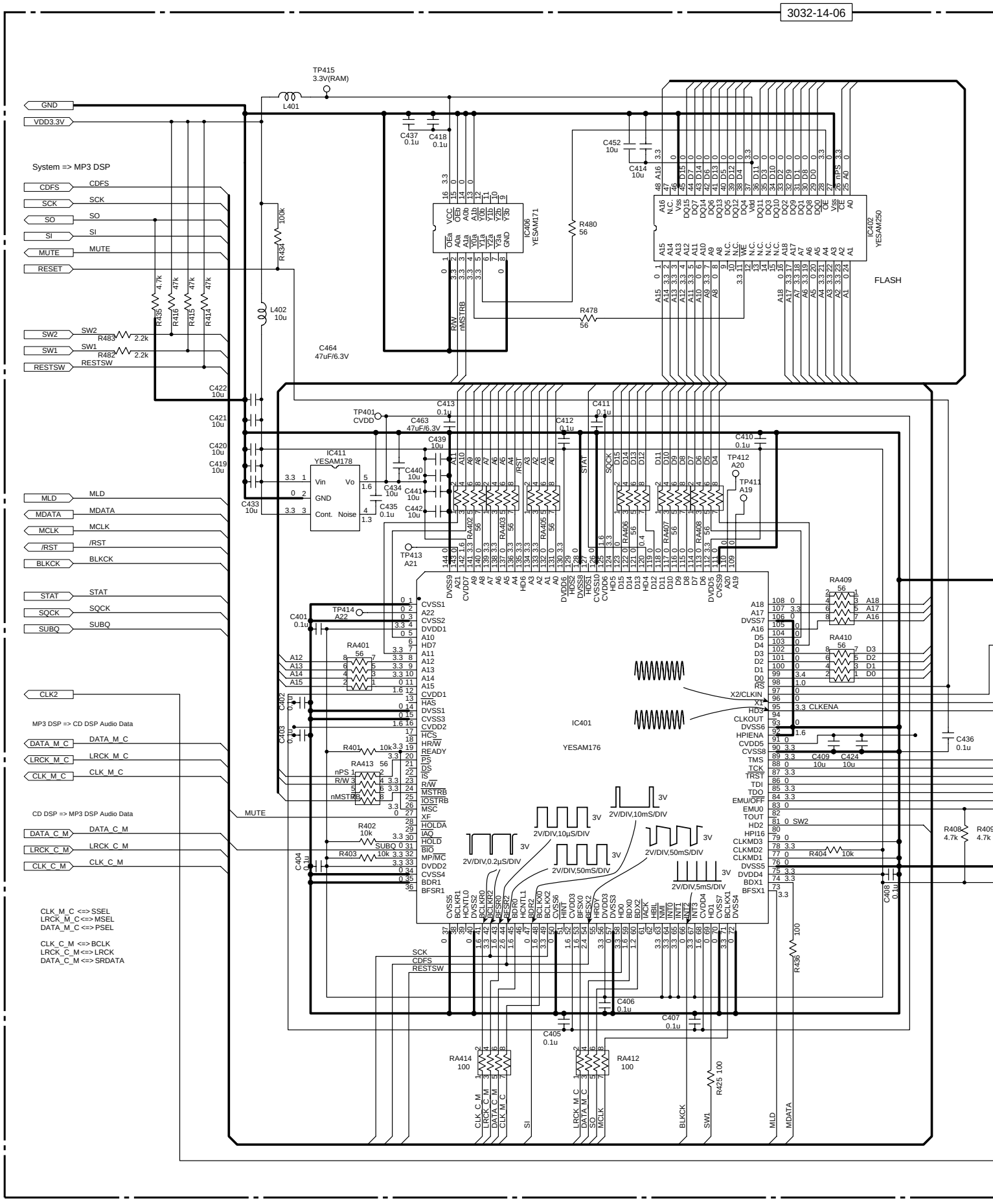

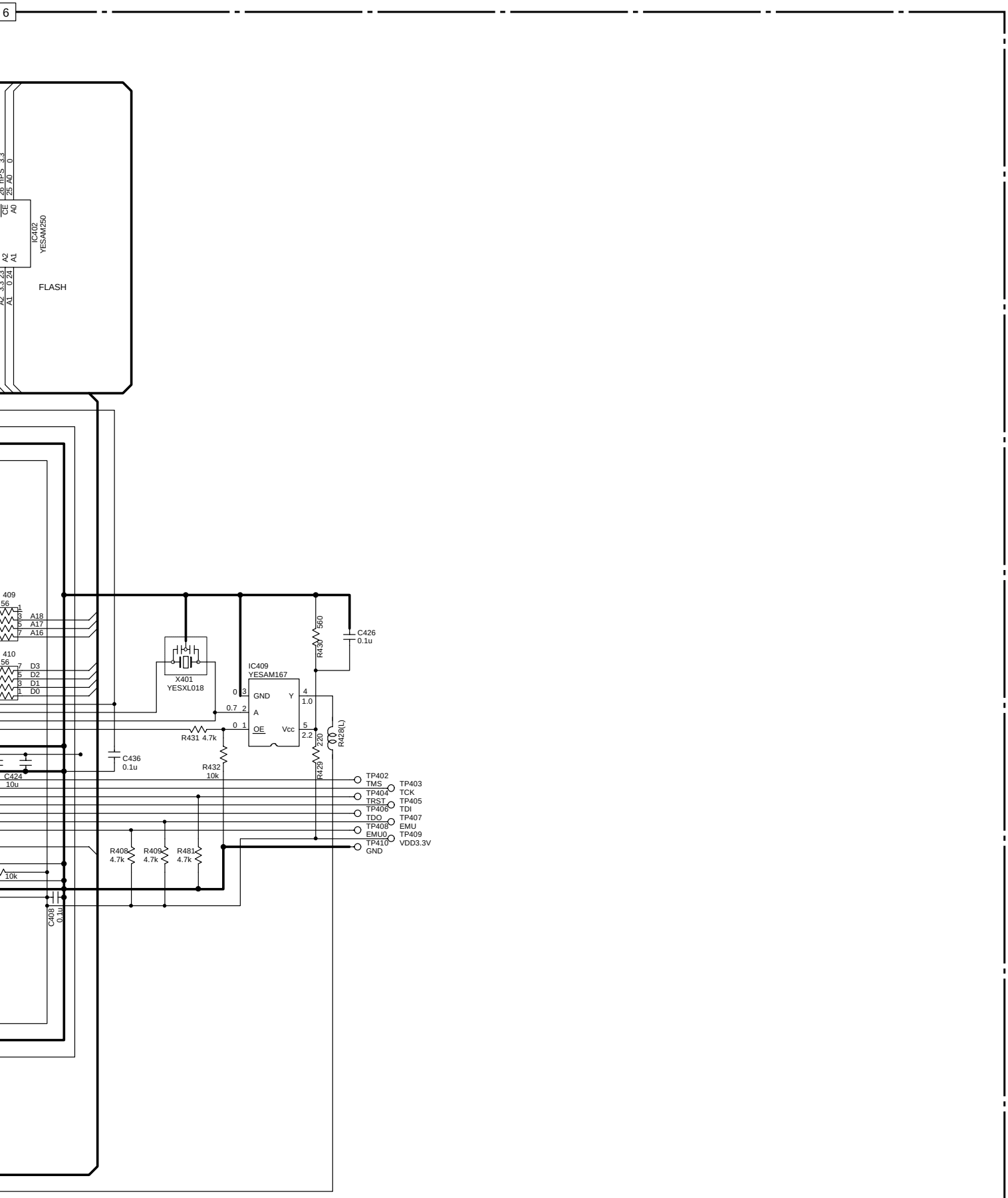

CDM-012(MP3)

YGFD15283 CD Servo Block (2/2)

20 SCHEMATIC DIAGRAM-2

20.1. Main Block

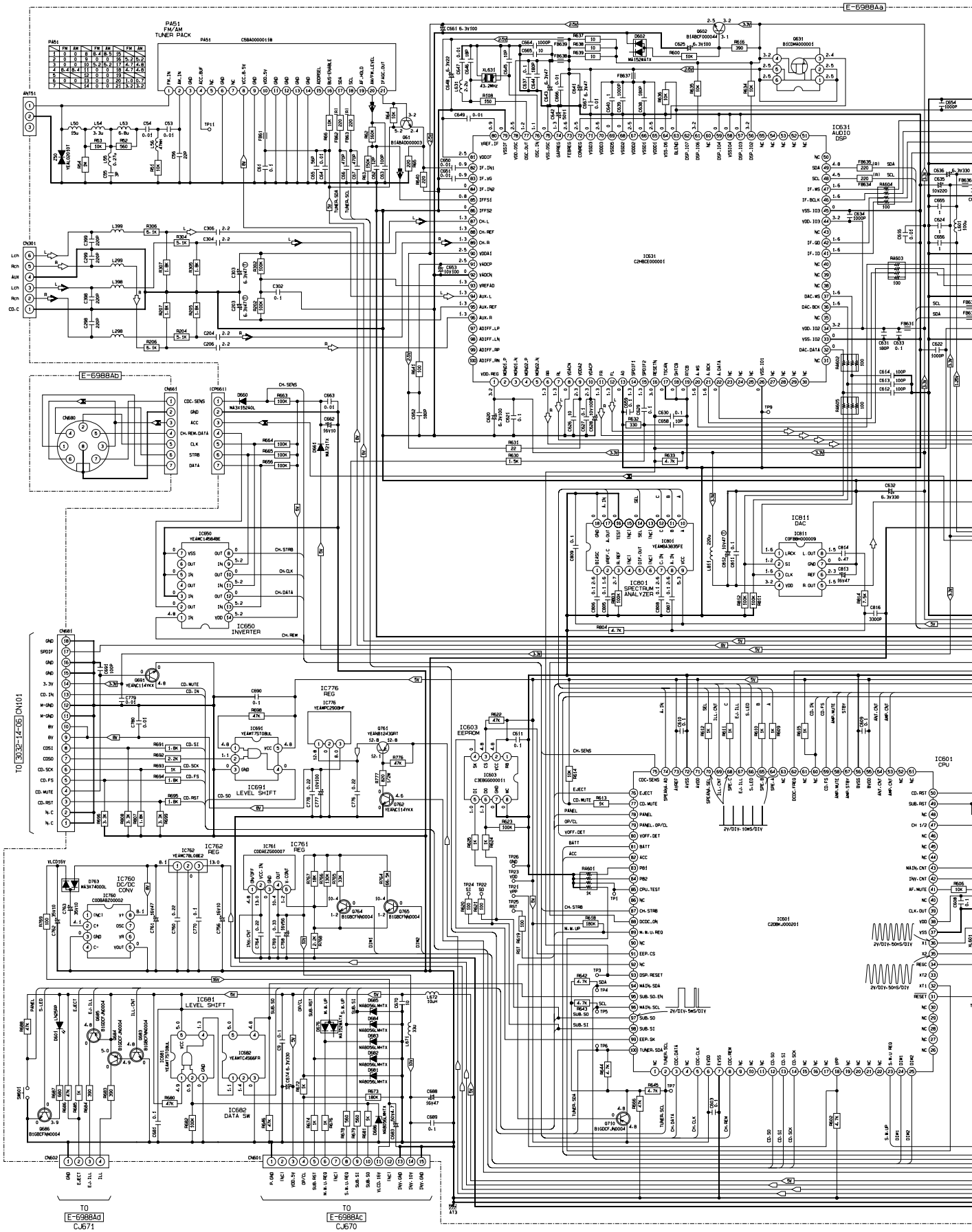

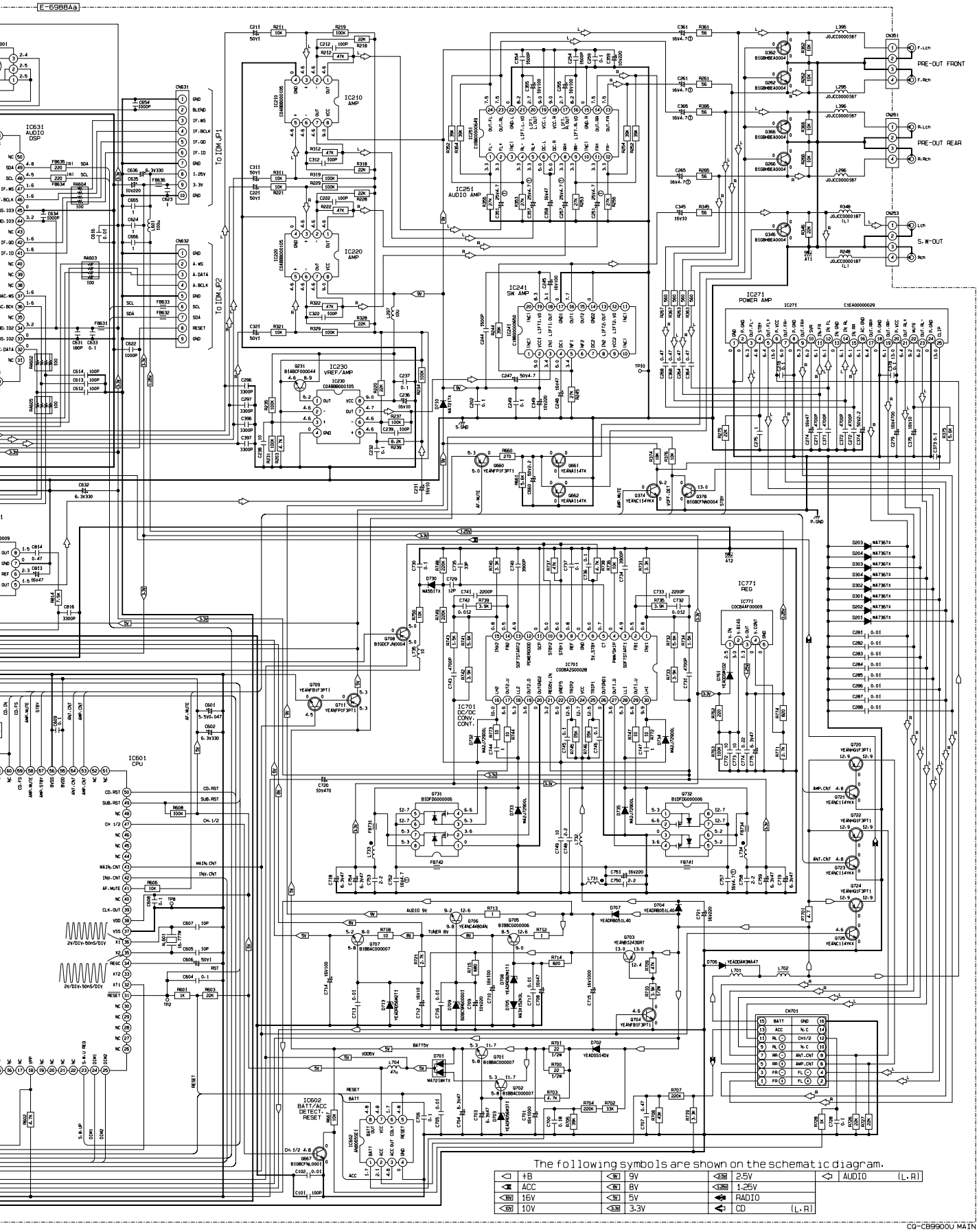

CQ-CB9900U MAIN

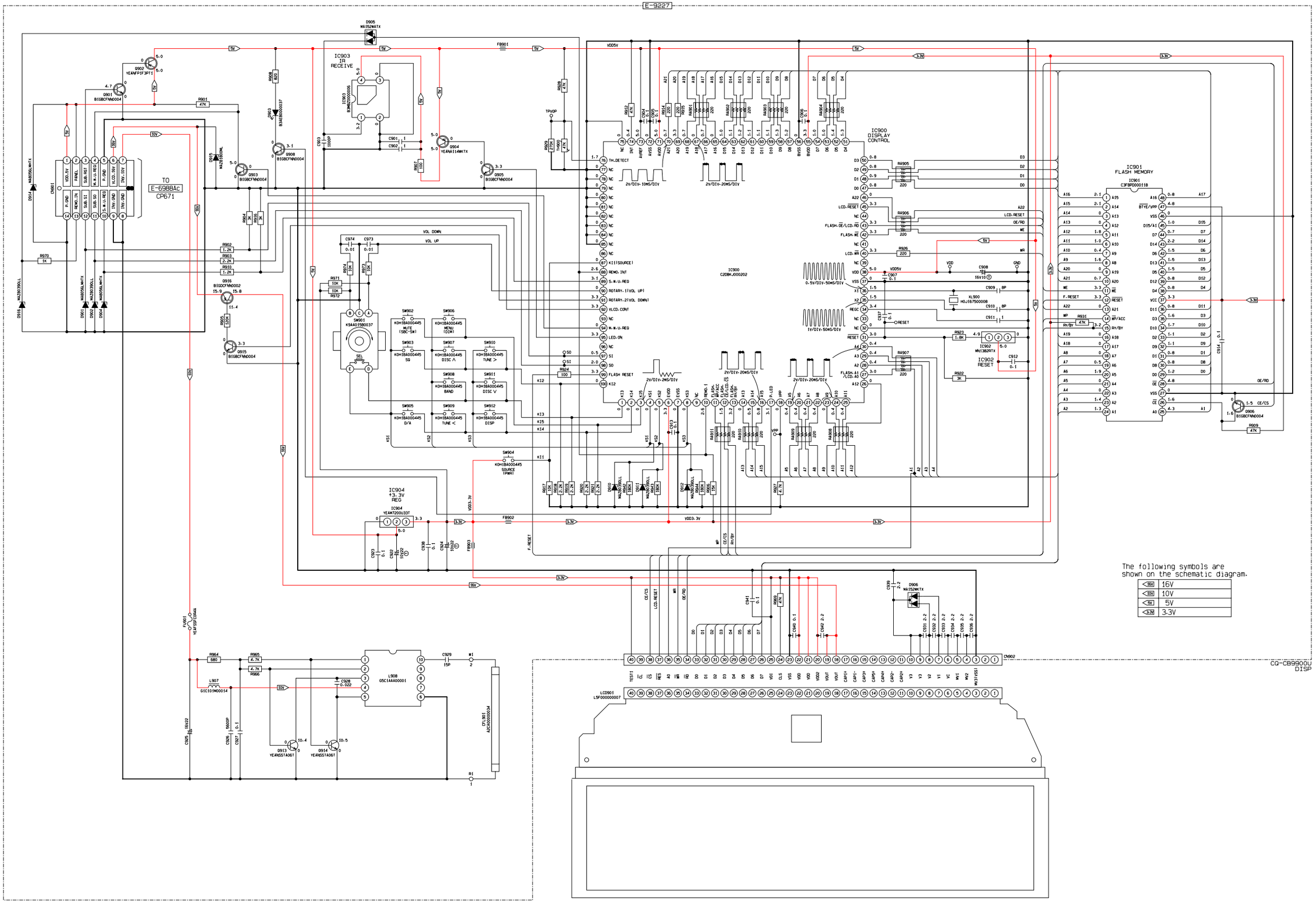

The following symbols are shown on the schematic diagram.

16V	16V
10V	10V
5V	5V
3.3V	3.3V

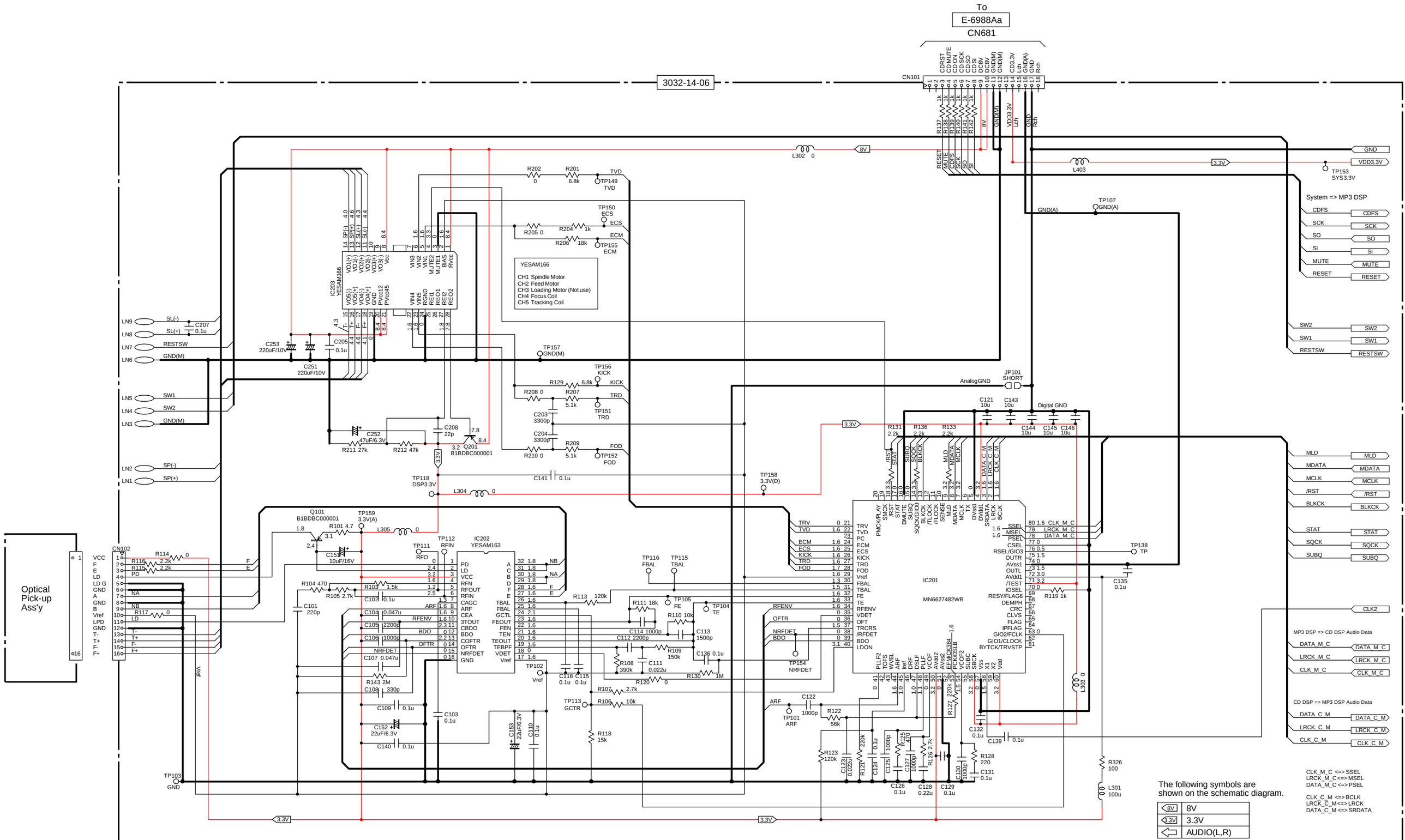

YGFD15283 CD Servo Block (1/2)

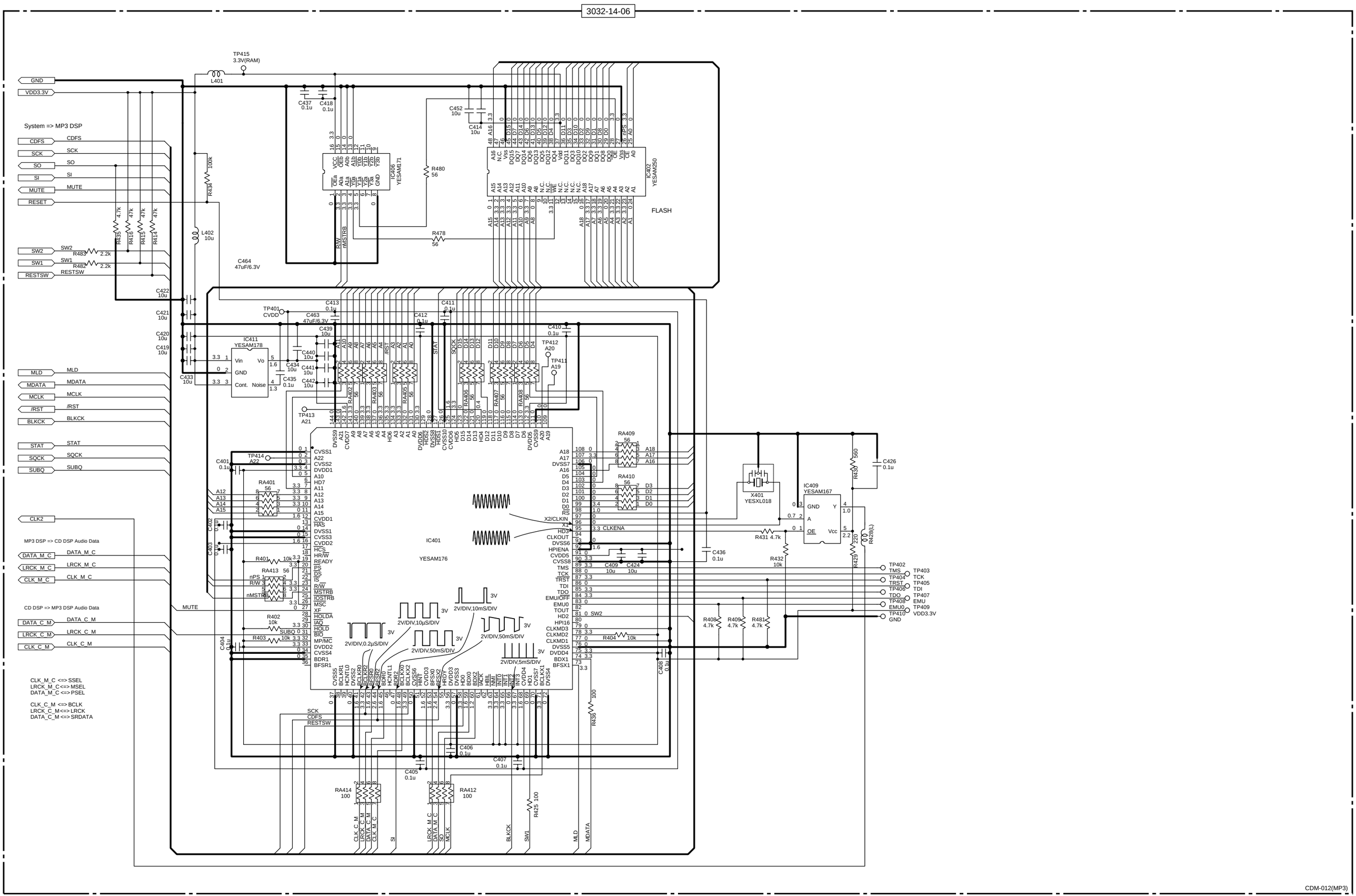
TP415
3.3V(RAM)
L401
GND
VDD3.3V
System => MP3 DSP
CDFS
SCK
SO
SI
MUTE
RESET
SW2
SW1
RESTSW
R483 2.2k
R482 2.2k
R435 4.7k
R415 47k
R414 47k
R434 100k
L402 10u
C464 47uF/6.3V
C437 0.1u
C418 0.1u
C452 10u
C414 10u
R480 56
R478 56
IC406 YESAM171
IC402 YESAM250
FLASH
C422 10u
C421 10u
C420 10u
C419 10u
C433 10u
TP401 CVDD
C463 47uF/6.3V
C413 0.1u
C412 0.1u
C411 0.1u
C410 0.1u
C439 10u
C440 10u
C441 10u
C442 10u
C434 10u
C435 0.1u
IC411 YESAM178
Vin
Vo
GND
Cont.
Noise
MLD
MDATA
MCLK
/RST
BLKCK
STAT
SQCK
SUBQ
TP412 A20
TP411 A19
TP413 A21
TP414 A22
C401 0.1u
RA401 56
RA409 56
RA410 56
RA413 56
RA402 56
RA403 56
RA405 56
RA406 56
RA407 56
RA408 56
IC401
YESAM176
CLK2
MP3 DSP => CD DSP Audio Data
DATA_M_C
LRCK_M_C
CLK_M_C
CD DSP => MP3 DSP Audio Data
DATA_C_M
LRCK_C_M
CLK_C_M
R401 10k
R402 10k
R403 10k
R404 10k
SUBQ
MUTE
2V/DIV,10μS/DIV
2V/DIV,0.2μS/DIV
2V/DIV,50mS/DIV
2V/DIV,10mS/DIV
2V/DIV,5mS/DIV
3V
X401 YESXL018
IC409 YESAM167
GND
A
OE
Y
Vcc
R430 560
C426 0.1u
R428(L)
R429 220
R431 4.7k
R432 10k
C436 0.1u
C409 10u
C424 10u
TP402 TMS
TP404 TRST
TP406 TDI
TP408 EMU0
TP410 GND
TP403 TCK
TP405 TDI
TP407 TDO
TP409 VDD3.3V
R408 4.7k
R409 4.7k
R481 4.7k
R404 10k
C408 0.1u
R436 100
C406 0.1u
C407 0.1u
C405 0.1u
RA414 100
RA412 100
R425 100
CLK_C_M
LRCK_C_M
DATA_C_M
CLK_M_C
SI
LRCK_M_C
DATA_M_C
SO
MCLK
BLKCK
SW1
MLD
MDATA
SCK
CDFS
RESTSW
CLK_M_C <=> SSEL
LRCK_M_C <=> MSEL
DATA_M_C <=> PSEL
CLK_C_M <=> BCLK
LRCK_C_M <=> LRCK
DATA_C_M <=> SRDATA

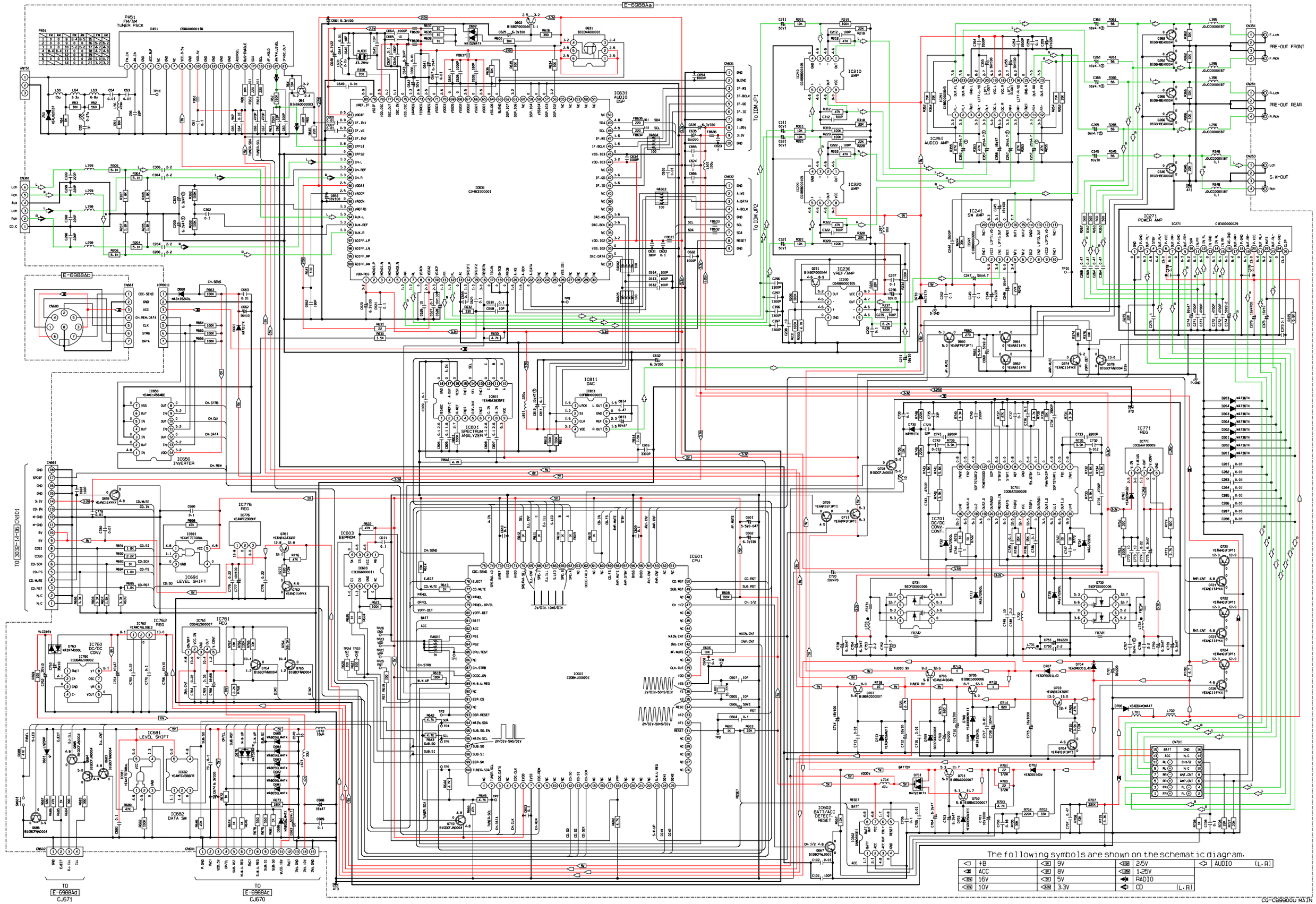
E-6988Aa
E-6988Ab
P451
FM/AM TUNER PACK
IC631 AUDIO DSP
IC601 CPU
IC603 EEPROM
IC681 LEVEL SHIFT
IC682 DATA SW
IC691 LEVEL SHIFT
IC776 REG
IC762 REG
IC761 REG
IC750 DC/DC CONV
IC650 INVERTER
IC611 DAC
IC601 SPECTRUM ANALYZER
IC210 AMP
IC220 AMP
IC251 AUDIO AMP
IC241 SW AMP
IC230 VREF/AMP
IC271 POWER AMP
IC771 REG
IC701 DC/DC CONV. CONT.
IC602 BATT/ACC DETECT. RESET
CN101
CN651
CN681
CN602
CN601
CN701
CN451
CN631
CN632
CN401
TO CJ671
TO CJ670
PRE-OUT FRONT
PRE-OUT REAR
S.W-OUT
TO TDM_JP1
TO TDM_JP2
The following symbols are shown on the schematic diagram.
+B
ACC
16V
10V
9V
8V
5V
3.3V
2.5V
1.25V
RADIO
CD (L,R)
AUDIO (L,R)
CQ-CB9900U MAIN

The following symbols are shown on the schematic diagram.

16V	16V
10V	10V
5V	5V

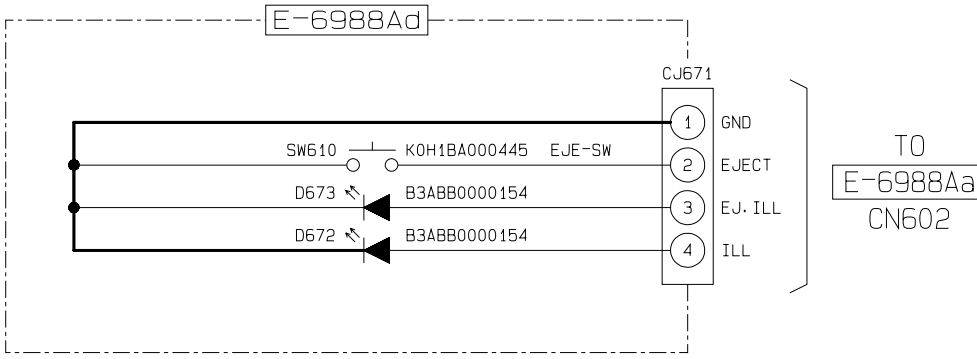

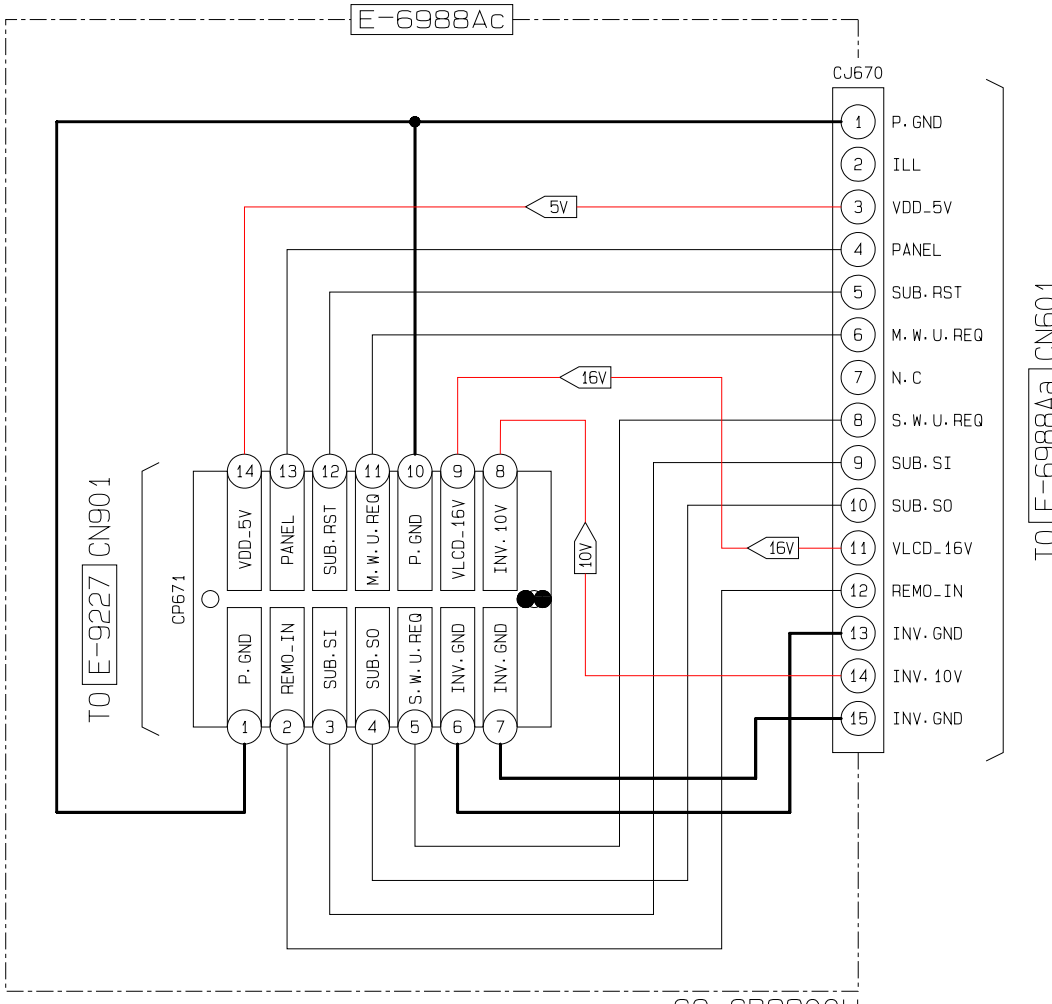

CQ-CB9900U

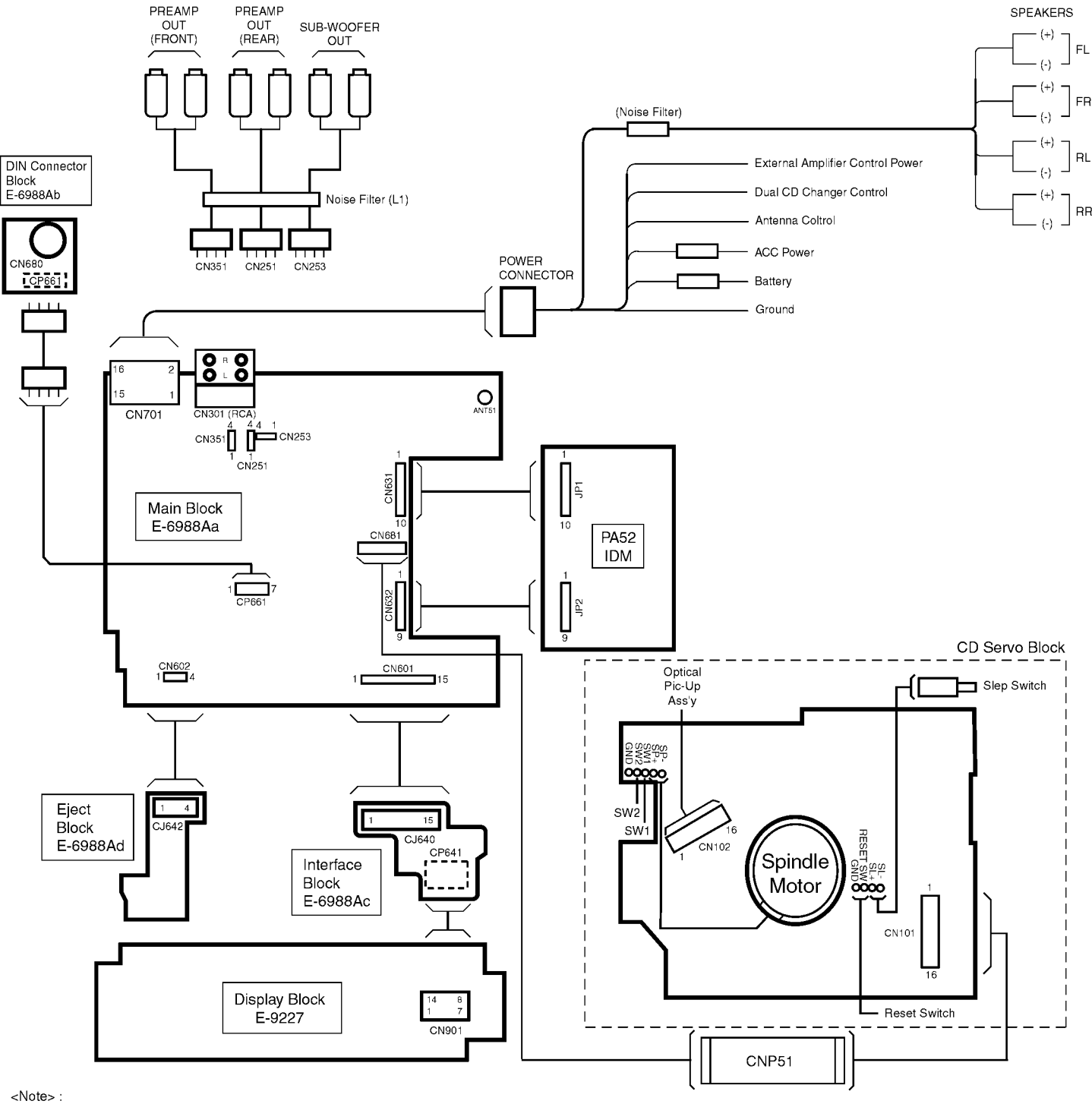

<Note> :

▭ ·····This mark shows a Ref. No. of connector

⬚ ·····This mark shows a mounting position of connector.

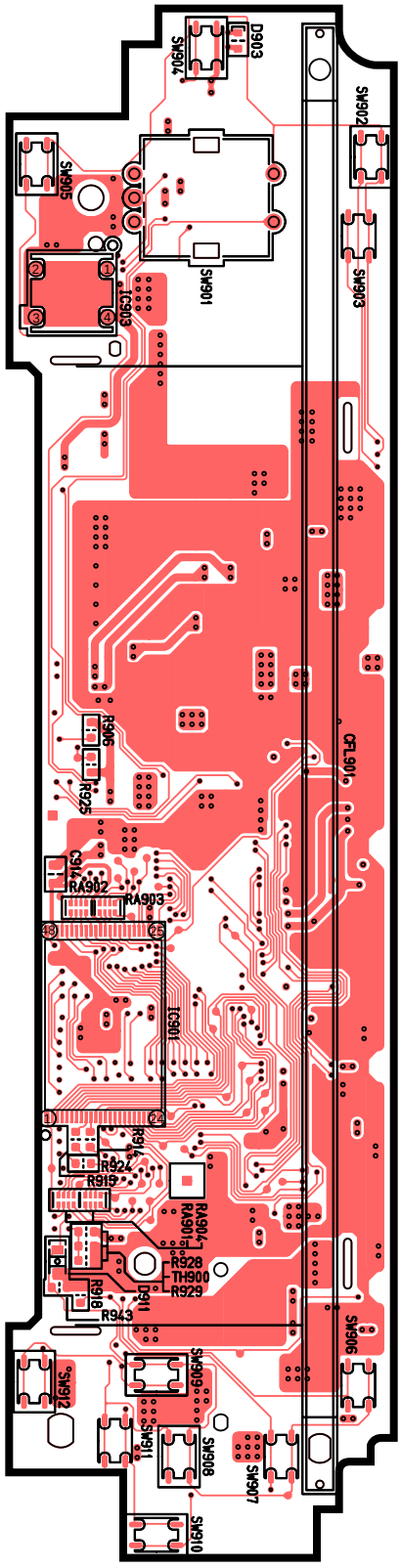

[E-9227] [Top View]

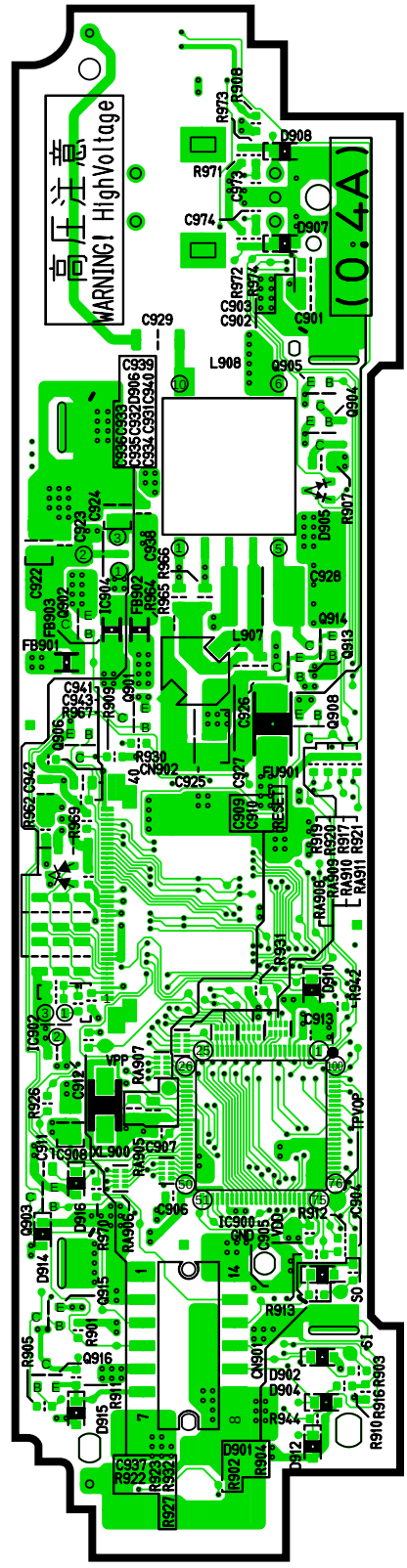

[E-9227] [Bottom View]

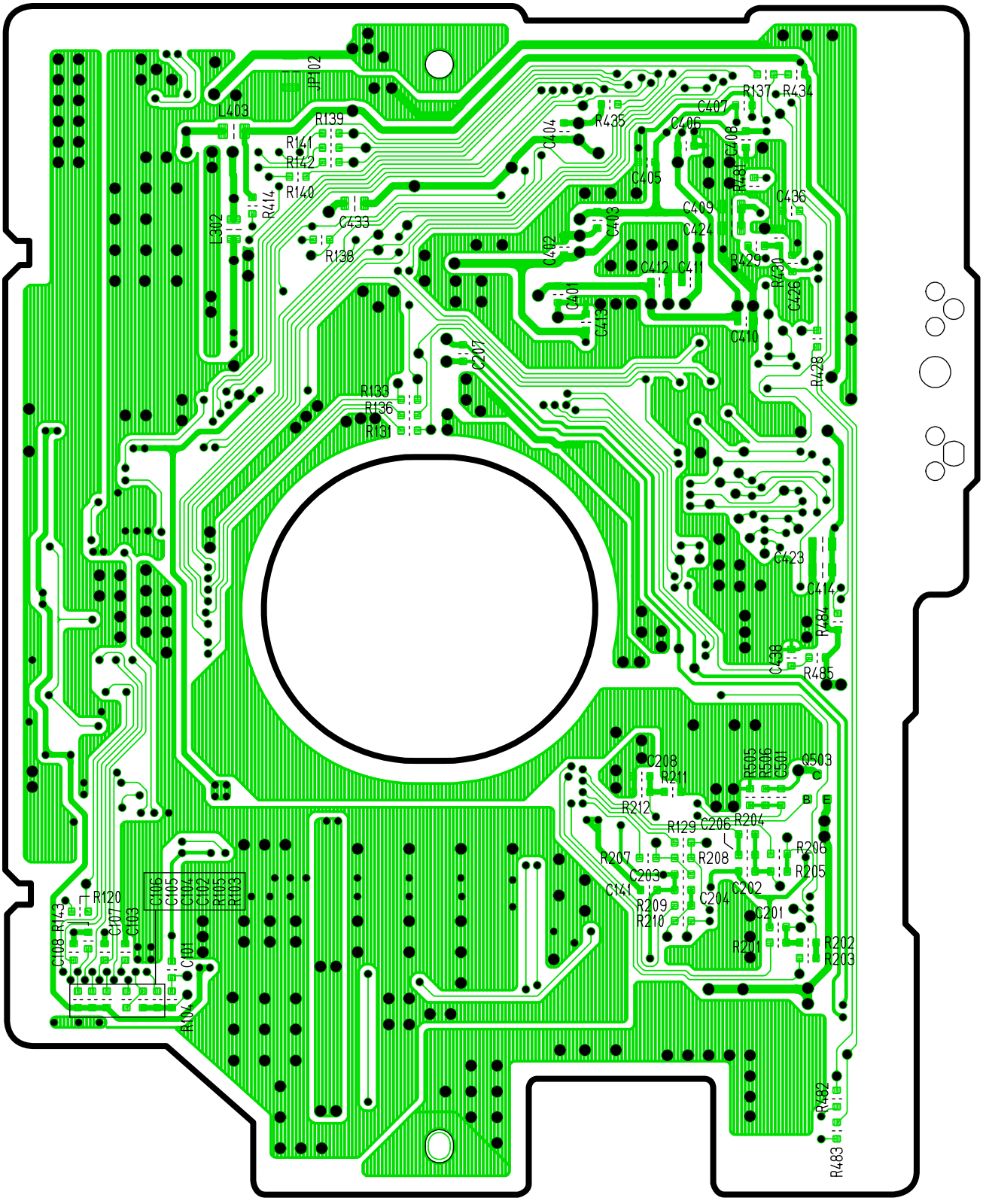

[3032-14-06][Bottom View]

YGFD15283 CDServo P.C.B

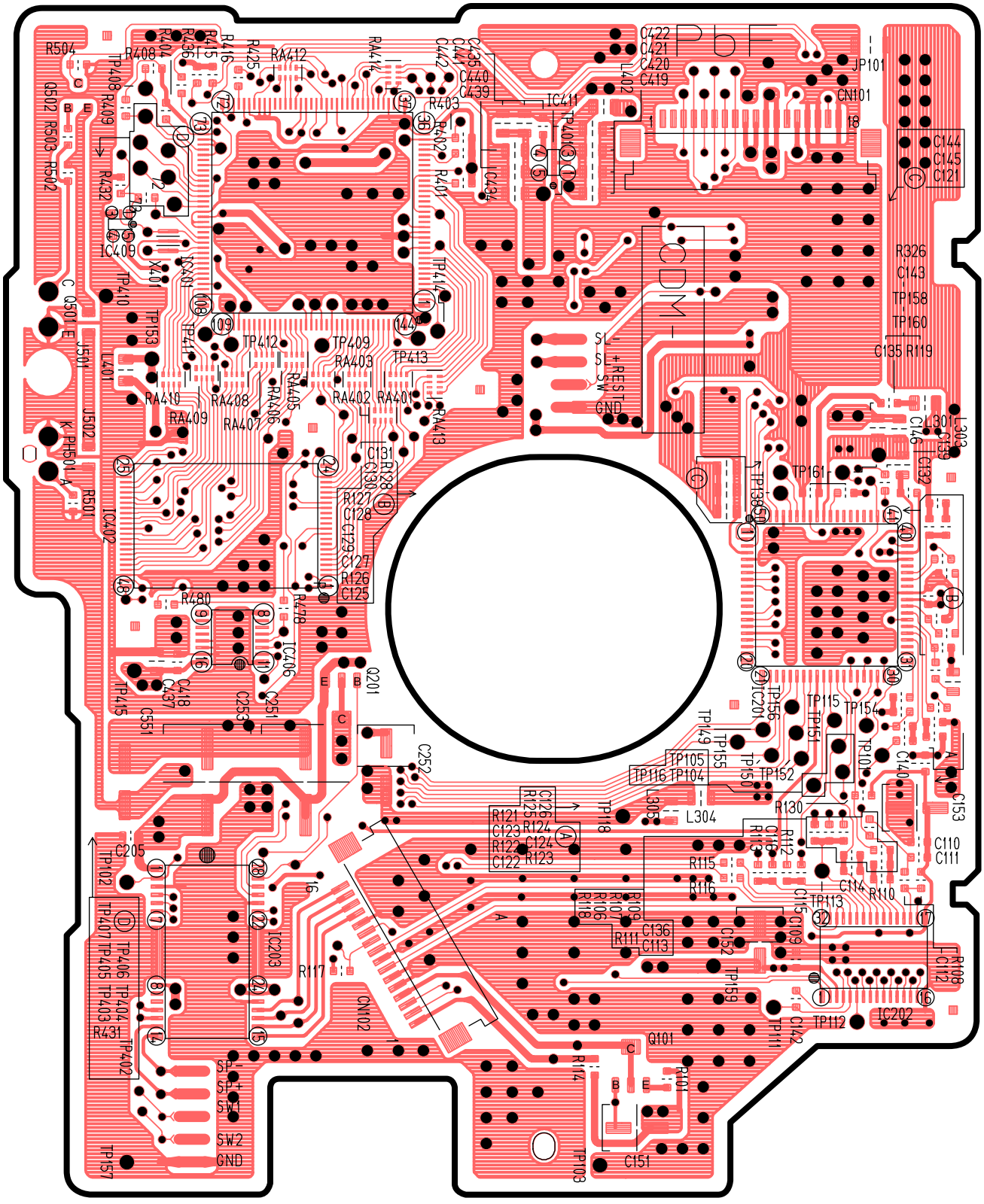

[3032-14-06][Top View]

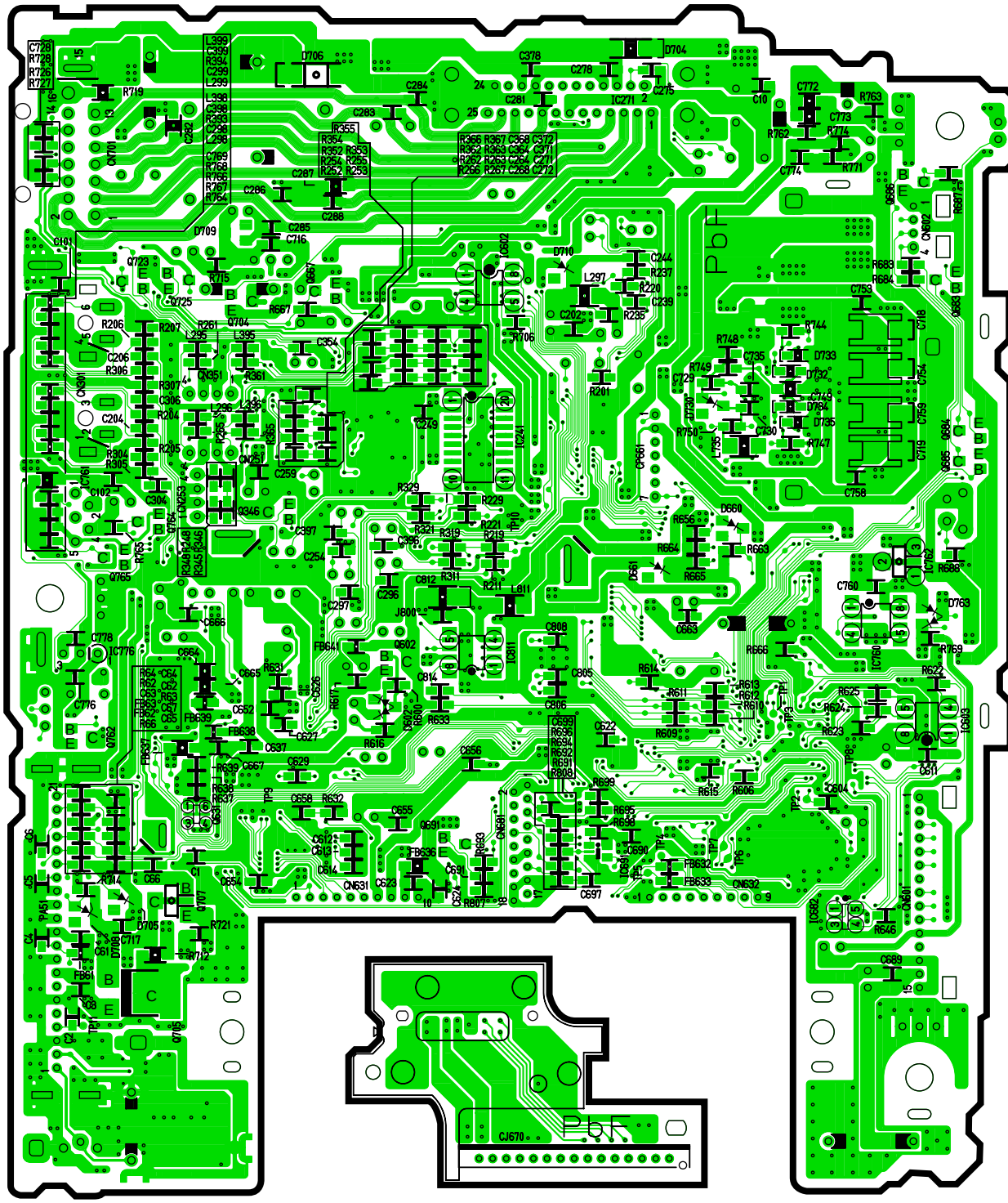

[E-6988Ac][Bottom View]

[E-6988Aa][Bottom View]

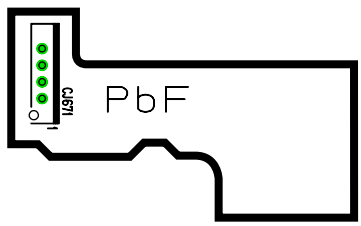

[E-6988Ad][Bottom View]

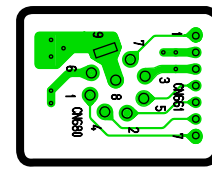

[E-6988Ab][Bottom View]

CQ-CB9900U Main P.C.B

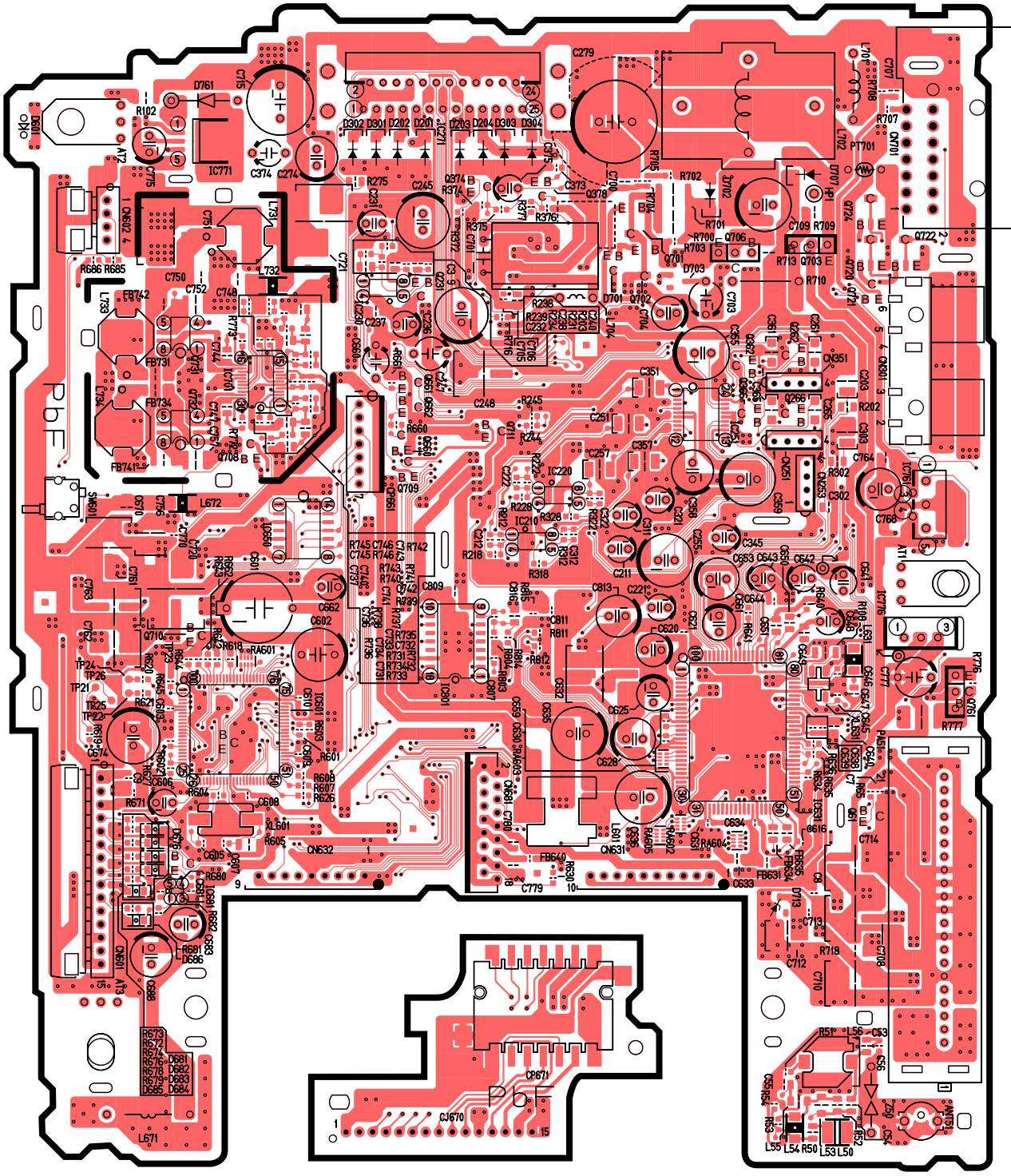

[E-6988Aa][Top View]

[E-6988Ac][Top View]

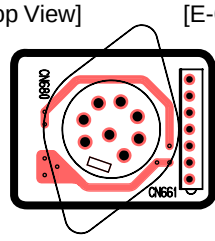

[E-6988Ab][Top View]

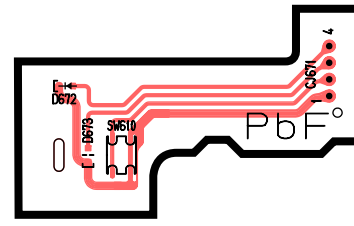

[E-6988Ad][Top View]

CQ-CB9900U Main P.C.B

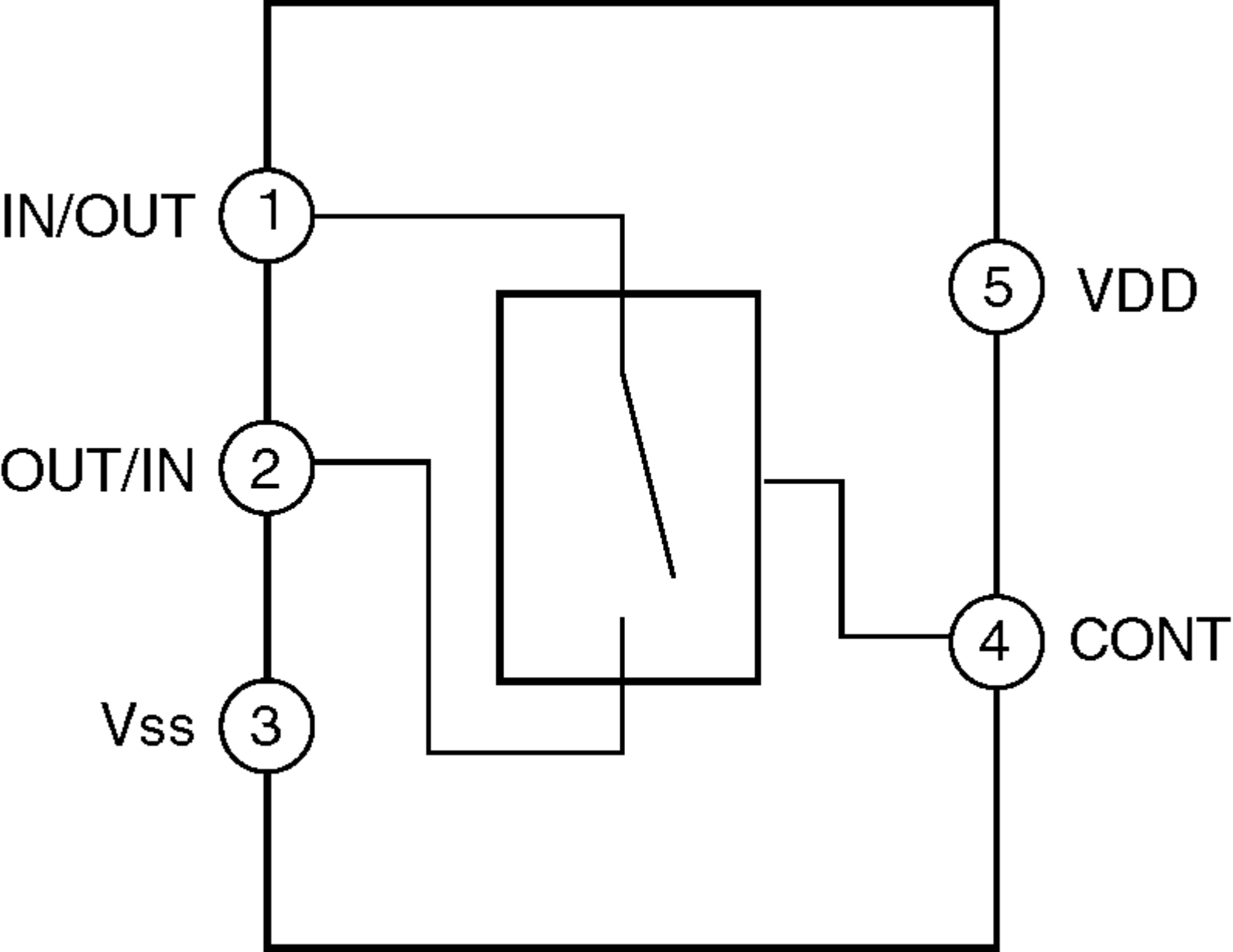
IN/OUT
1
OUT/IN
2
Vss
3
5
VDD
4
CONT