HIS MASTER'S VOICE C13D, U63A, U63B

TECHNICAL SPECIFICATION

POWER SUPPLY:
200 to 250 volts, 40 to 50 c.p.s.

CONSUMPTION:
36 watts.

FREQUENCY RANGE:
540 Kc/s to 1600 Kc/s.
5.9 Mc/s to 18.25 Mc/s.

I.F. FREQUENCY:
457.5 Kc/s.

VALVE COMPLEMENT:

6BE6	Frequency Changer.
6BA6	I.F. Amplifier.
6AV6	A.V.C.-Demod.-Audio Amp.
6M5	Power.
6X4	Rectifier.

DIAL LAMPS:
6.3 volt, 0.15 to 0.3 amp.

LOUDSPEAKER:
Permagnetic type. Voice coil impedance at 400 cycles = 4 ohms.

DIMENSIONS:

Packed—	
Width	14½ in.
Height	12 in.
Depth	9 in.
Unpacked—	
Width	12 in.
Height	8⅞ in.
Depth	6¼ in.

WEIGHT:

Receiver packed	12 lbs.
Receiver only	9½ lbs.

CIRCUIT DESCRIPTION

This model incorporates a 5-valve A.C. mains-operated superheterodyne receiver for medium-wave and short-wave reception, and incorporates pick-up terminals for record player reproduction.

FREQUENCY CHANGER

The aerial, on the broadcast band, is coupled to the signal frequency circuit by means of the iron-dust cored aerial transformer, L1-L2. For short-wave reception, the short-wave aerial transformer, L3-L4, is switched into circuit.

The frequency changer valve is used as a pentagrid converter with a self-excited oscillator circuit.

Fixed padding capacities are used on both bands. On the short-wave the padding capacitor is switched in the aerial circuit, whilst on medium-wave padding is provided in the oscillator circuit with variable padding provided by an iron-dust bolt in coil L5.

I.F. AMPLIFIER

The frequency changer valve is transformer-coupled to a remote cut-off pentode V2. This valve is, in turn, transformer-coupled to the demodulator diode section of the duo-diode triode valve V3. Both I.F. transformers have fixed tuning capacitors, and permeability tuning is provided by means of iron-dust tuning bolts.

DEMODULATOR, A.V.C. AND A.F. AMPLIFIER

Simple A.V.C. is used to obtain A.V.C. potentials for the frequency changer and I.F. amplifier.

The demodulated signal across the diode load VR1 is applied to the grid of the triode section of V3.

The audio amplifier is resistance capacity coupled to the grid of the power output valve V4.

Switching is provided for earthing the diode and A.V.C. line and for switching the P.U. terminals across the volume control.

AUDIO OUTPUT AMPLIFIER

The power pentode output valve V4 is transformer-coupled to the loudspeaker. Inverse feedback is provided by feeding voltage from the voice coil via C22 to the cathode of the 6M5 output valve.

H.T. SUPPLY

The power supply employs an indirectly heated type high-vacuum valve V5 as a full wave rectifier. Unfiltered high tension voltage is fed to the power output valve plate circuit, whilst the remaining receiver circuits are supplied with H.T. through a resistance capacity filter.

MAINS VOLTAGE ADJUSTMENTS

Before leaving our Works, all receivers of this model are connected for operation on mains voltages of between 226 and 250 volts. A mains voltage panel is provided inside the chassis with tags marked 210 and 240. Should it be required to operate this receiver on a lower mains voltage of between 200 and 225, the lead must be removed from the tag marked 240 and connected to the tag marked 210. Provision is made on the mains voltage panel for connection of mains transformer primary tappings to suit the appropriate mains voltage.

HIS MASTER'S VOICE C13D, U63A, U63B

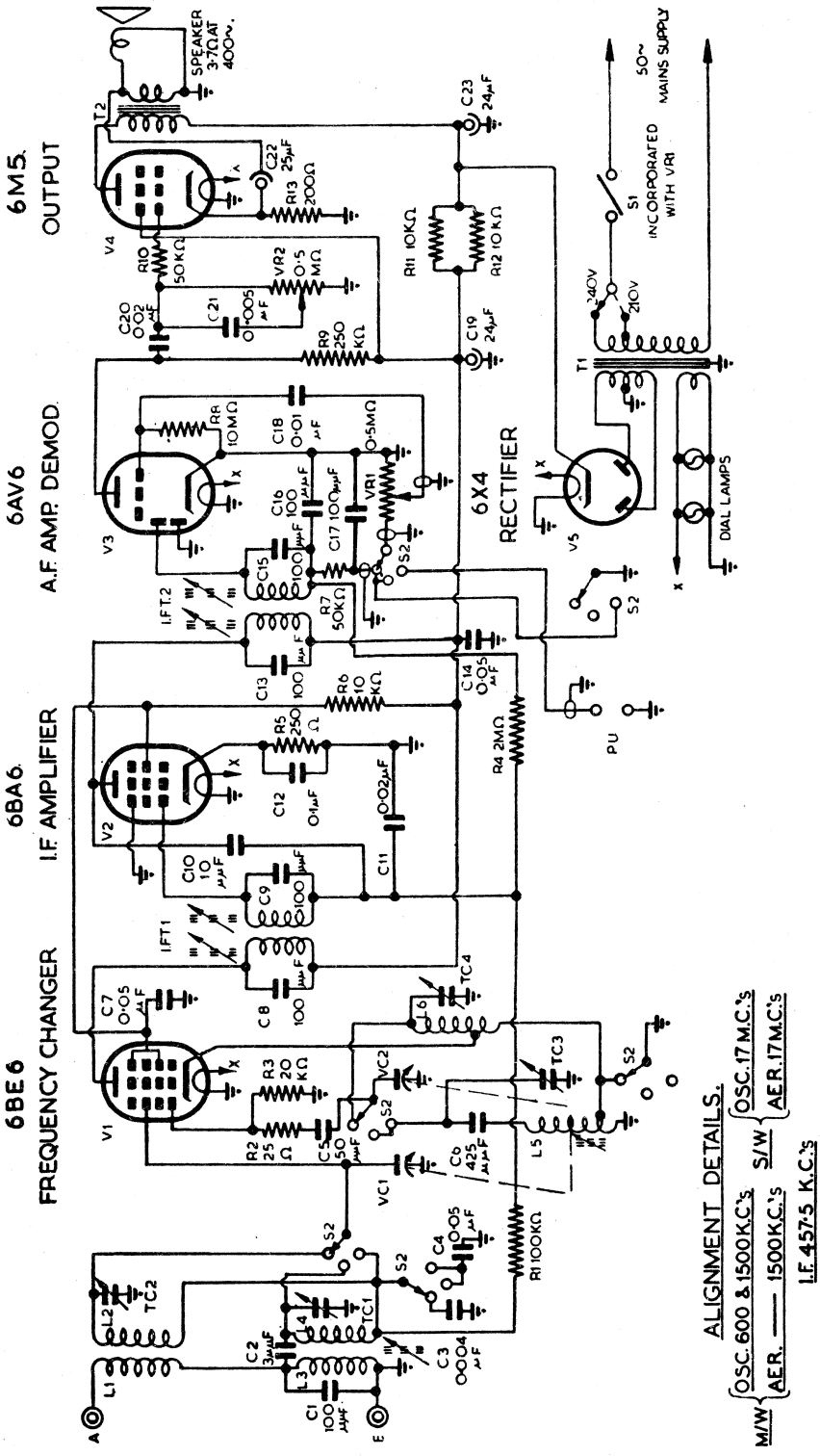

NOTE: In early receivers of this model which are fitted with type 6AQ5 Output Valves, C18 is connected between junction of R9 and Grid of V4 and Earth.

HIS MASTER'S VOICE C13D, U63A, U63B

RESISTORS

R1	0.1 megohm ± 10% ½ watt
R2	25 ohms ± 10% ½ watt
R3	20,000 ohms ± 10% ½ watt
R4	2 megohms ± 10% ½ watt
R5	250 ohms ± 10% ½ watt
R6	10,000 ohms ± 10% 1 watt
R7	50,000 ohms ± 10% ½ watt
R8	10 megohms ± 10% 1 watt
R9	0.25 megohm ± 10% ½ watt
R10	50,000 ohms ± 10% ½ watt
R11	10,000 ohms ± 10% 1 watt
R12	10,000 ohms ± 10% 1 watt
R13	200 ohms ± 10% 1 watt

CONDENSERS

C1	100 pF. ± 10%
C2	3 pF. ± 10%
C3	.004 mF. ± 100 pF
C4	.05 mF. ± 20% 200V. wkg.
C5	50 pF. ± 10%
C6	425 pF. ± 5 pF.
C7	.05 mF. ± 20% 400V. wkg.
C8	100 pF. ± 5%
C9	100 pF. ± 5%
C10	10 pF. ± 10%
C11	.02 mF. ± 20% 400V. wkg.
C12	.1 mF. ± 20% 200V. wkg.
C13	100 pF. ± 5%
C14	.05 mF. ± 20% 400V. wkg.
C15	100 pF. ± 5%
C16	100 pF. ± 10%
C17	100 pF. ± 10%
C18	.01 mF. ± 20% 600V. wkg.
C19	24 mF. 350 P.V.
C20	.02 mF. ± 20% 400V. wkg.
C21	.005 mF. ± 20% 600V. wkg.
C22	25 mF. 40 P.V.
C23	24 mF. 350 P.V.

MISCELLANEOUS

T1	Transformer, Mains
T2	Transformer, Output
VC1-VC2	Condenser, 2-Gang
VR1/S1	Potentiometer, ½ meg. with 2-pole switch
L3-L4	Coil, Medium Wave Aerial
L5	Coil, Medium Wave Oscillator
TC1	Condenser, Trimmer Aerial—S.W. & M.W.
TC2	Condenser, Trimmer Oscillator—SW & MW
IFT1	Transformer, 1st I.F.
IFT2	Transformer, 2nd I.F.
Spkr.	5" x 7" Permagnetic Elliptical Speaker; or
Spkr.	5" Permagnetic Speaker with Baffle Adaptor

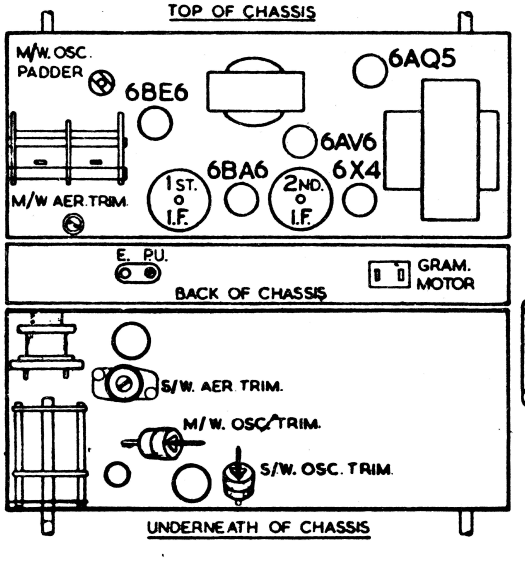

ALIGNMENT.

I.F. – 457·5 K.Cs

M/W { OSC.-600 & 1500 K.C.s / AER.—— 1500 K.C.s }

S/W { OSC. 17 M.C.s / AER. 17 M.C.s }