INSTRUMENT HANDBOOK

Applicable to Serial No.....

MODEL bwd 207A

D.C. POWER SUPPLY

B.W.D. ELECTRONICS PTY. LTD.
331-333 BURKE ROAD, GARDINER
VICTORIA 3146, AUSTRALIA

Telephone: 25-4425

B.W.D. ELECTRONICS PTY. LTD.
127 BLUES POINT RD., NORTH SYDNEY
NEW SOUTH WALES 2060, AUSTRALIA.

Telephone: 929-7452

INSTRUMENT HANDBOOK

MODEL bwd 207A

D.C. POWER SUPPLY

1. GENERAL Model 207A is a fully transistorised stabilised power supply which provides high power with good regulation. The output voltage range is continuously variable from 10V to 15V, with a fine control covering ± 0.25V.

Re-entrant foldback current overload reduces internal dissipation and temperature drift.

Output Impedance is low at 1 mΩ with only 2mV pp ripple.

2. PERFORMANCE

Voltage Range (Coarse)	10V to 15V
Voltage Range (Fine)	± 0.25V
Current	0 - 12.5A
Stabilisation Ratio for 10% line change	2000 : 1
Ripple and Noise at full load	< 1mV pp
Output Impedance	
DC - 100Hz	< 1mΩ
100Hz - 1kHz	< 5mΩ
1kHz - 10kHz	< 10mΩ
10kHz - 100kHz	< 100mΩ
100kHz - 1MHz	< 1Ω
Transient Response 0 - 100% load	< 50 μS
Long Term Stability 1000 hrs constant temperature and load	0.1% + 1mV
Current Overload	Constant Current to 9V Foldback below 9V See Fig. 1.
A.C. Input Utilising 205 & 235v tappings	180V - 260V 50 - 60Hz.

3. CONTROLS AND THEIR FUNCTIONS

A.C. On - Off	Input Power Switch
A.C. Fuse	2 Amp delay fuse fitted after power switch in AC power line.
A.C. Indicator	Near indicator across transformer primary.
Output Voltage, Coarse	Continuously variable control to set output voltage from 10V to 15V.
Output Voltage, Fine	Continuously variable control to change output voltage by ±0.25V over the entire range of the coarse control.
Terminals	Load - Red (positive) and Black (negative) Ground - Uninsulated terminal.

4. OPERATION

Connect 3 pin plug to mains. Switch on at mains. Switch power switch on unit to 'ON', and adjust coarse and fine Output Voltage Controls for desired output indicated on panel meter.

Switch power switch to 'OFF' and connect load to front panel terminals + ve to red - ve to black. Switch 'ON'. Ammeter will indicate the current in the load. If the voltage drops when the load is applied, the load current may be greater than 12.5A putting the supply into overload. If however the Ammeter registers less than 12.5A and the voltage is still low, the foldback current overload could be operating, see fig 1. for operation of foldback overload.

5. CIRCUIT DESCRIPTION

Two secondary windings are provided on transformer T1, the 19V-0-19V which supplies the power to the series regulators, and the 0-30V winding which provides the auxiliary supply.

The 30V winding output is rectified by D1 and filtered by C1. Zener diode D6 fed via R1 stabilises the auxiliary supply to a nominal 12V which is then used to power the Integrated Circuit.

The reference voltage is generated inside IC 1 and appears at V ref. where it is divided by R2 and R7 and fed to the inverting input of IC 1 (INV). The non-inverting input (N.I.) is taken via R17 to RV7, fine output voltage control. R2, RV4, RV7, R9, RV5, R15 and R11, form an adjustable divider from V ref. to the negative output terminal, and the N1 and INV inputs compare the output voltage (i.e. a part of the output voltage) with the reference voltage, and thus stabilise the supply output voltage. The output of IC 1 is taken from Vo via zener diode D7 to the base of Q1. Q1 and Q2 emitter followers drive the four series regulator transistors Q3, 4, 5 and 6, and their outputs are taken via R4, R3, R25 and R24 respectively to the positive output terminal. R4 provides both the Ammeter source and the current overload sensing voltage. Voltage divider R10 and R20 across the unregulated power source coupled to the current overload circuit by D 8 provide the foldback overload operation.

6. MAINTENANCE AND ADJUSTMENTS

Component changes will not normally affect the performance of Model bwd 207A, subject to the replacement component being of similar size, stability, and performance to the original component. Transistor requirements are detailed in section 7.

RV1 Overload Current Preset

Set Output voltage to 15V, connect a 1Ω resistor (at least 200W capability) across the supply and adjust RV1 for 14 Amps output current.

RV2 Ammeter Calibrate Preset

With conditions as for RV1, insert an ammeter in series with the 1Ω resistor and adjust the Output voltage control until 12.5 Amps flows through the external ammeter. Adjust RV2 so that the Panel meter reads on the red line at the R.H.S. of the scale.

RV4 Output Voltage Reset

RV4 is set, with the fine output voltage control in mid position, to give an output voltage range of at least 10 to 15 Volts when the coarse output voltage control is varied.

RV6 Foldback Current Preset

Place a shorting link across the output terminals, check the mains input voltage and set to 230V if necessary, and adjust RV6 to give 3.5 Amps output current.
Note: The output current will vary with mains input when the foldback overload is in operation.

7. SEMICONDUCTOR ALTERNATIVES

TYPE	ALTERNATIVE	SPECIFICATION
BYX21/200	IN3493	200V PIV 3Amp Cathode to body
EM401	IN3291	100V PIV 200mA Wire in
B2Y88/C6V2		6.2V 250mW Wire in Zener
B2Y94/C12		12V 250mW Wire in Zener
2N3055	115 Watts @25°C	80V Vce hfe @2A
MJE340	20 Watts @25°C	300V Vce hfe @ 100mA
μA723c	No Alternative	

8. REPLACEMENT PARTS

Spares are normally available from the manufacturer, B.W.D. ELECTRONICS PTY. LTD. When ordering, it is necessary to indicate the serial number of the instrument. If exact replacements are not to hand, locally available alternatives may be used, provided they possess a specification not less than, or physical size not greater than the original component.

As the policy of B.W.D. ELECTRONICS PTY. LTD. is one of continuing research and development, the company reserves the right to supply the latest equipment and make amendments to circuits and parts without notice.

9. GUARANTEE

The equipment is guaranteed for a period of twelve (12) months from the date of purchase, against faulty materials and workmanship, with the exception of Cathode Ray Tubes, which are covered by their manufacturer's own warranty.

Please refer to Guarantee Registration card No..... with accompanied instrument, for full details of conditions of warranty.

REPLACEABLE PARTS

1. This section contains information for ordering replacement parts, and provides the following details:-

   (a) Description of part (see list of COMPONENT ABBREVIATIONS);
   (b) Typical manufacturer or supplier of the part (see list of MANUFACTURERS ABBREVIATIONS);
   (c) Manufacturer's Part Number where applicable; and
   (d) Defence Stock Number, where applicable.

2. Ordering - Please quote Model No., e.g. bwd 511, Serial No., Circuit Reference No. and component details as listed in Parts List.

3. Locally available alternatives may be used, provided they possess a specification not less than, or physical size not greater than the original components.

COMPONENT DESIGNATORS

A	Assembly	H	Heater	RV	Resistor Variable
B	Lamp	J	Jack (socket)	S	Switch
C	Capacitor	L	Inductor	T	Transformer
D	Diode	M	Meter	TH	Thermistor
DL	Delay Line	P	Plug	V	Valve
E	Misc.Elect.Part	Q	Transistor	VDR	Voltage Dependent Resistor
F	Fuse	R	Resistor		

COMPONENT ABBREVIATIONS

Amp	Ampere	L	Inductor
C	Capacitor	lin	Linear
cc	Cracked Carbon	Log	Logarithmic Taper
c	Carbon	m	Milli = 10^{-3}
cd	Deposited Carbon	MHz	Mega Hertz = 10^{6}Hz
comp	Composition	MF	Metal Film
CDS	Ceramic Disc Capacitor	ma	Milli Ampere
cer	ceramic	MΩ	Meg Ohm = $10^{6}\Omega$
Com	Common	mfr	Manufacturer
D	Diode	MO	Metal Oxide
DPST	Double Pole Single Throw	MHT	Polyester/Paper Capacitor
DPDT	Double Pole Double Throw	MPC	Metalised Polyester Capacitor
elec	Electrolytic	Ne	Neon
F	Farad	NPO	Zero temperature co-efficient
f	Fuse	nsr	Not separately replaceable
FET	Field Effect Transistor	NC	Normally Closed
Ge	Germanium	NO	Normally Open
H	Henry (ies)	ns	Nano second
HS	High Stability	obd	Order by Description
HTC	High Temp Coating	OD	Outside Diameter
IC	Integrated Circuit	p	Peak
ins	Insulated	pf	pico farad = 10^{-12}F
kHz	Kilo Hertz = 10^{3}Hz	Se	Selenium
KΩ	Kilohm - $10^{3}\Omega$	Sl	Slide

COMPONENT ABBREVIATIONS (cont.)

PL	Plug
PS	Socket
Preset	Internal Preset
PYE	Polyester
pot	Potentiometer
prec	Precision
PC	Printed circuit
PIV	Peak Inverse Voltage
PYS	Polystyrene
p-p	Peak to Peak
P.Shaft	Plain Shaft
Q	Transistor
R	Resistor
rot	rotary
R log	Reverse Logarithmic Taper
rms	Root Mean Squared
SPDT	Single Pole Double Throw
SPST	Single Pole Single Throw
S.Shaft	Slotted Shaft
Si	Silicon
Ta	Tantalum
tol	Tolerance
trim	trimmer
V	Volt(s)
var	variable
vdcw	Volts Direct Current Working
w	Watt(s)
ww	Wire Wound
Z	Zener
*	Factory Selected value, nominal value may be shown
**	Special component, no part no. assigned

MANUFACTURERS ABBREVIATIONS

AC	Allied Capacitors
AEE	AEE Capacitors
AN	Anodeon
AST	Astronic Imports
AWA	Amalgamated Wireless of Aust.
ACM	Acme Engineering Pty. Ltd.
AMP	Aircraft Marine Products (Aust.)P/L
AR	A. & R. Transformers
AUS	Australux Fuses
AWV	Amalgamated Wireless Valve Co.
ACA	Amplifier Co. of Aust.
AL	Alpha
ARR	Arrow
BWD	B.W.D. Electronics Pty. Ltd.
BL	Belling & Lee Pty. Ltd.
BR	Brentware (Vic.) Pty. Ltd.
BU	Bulgin
CF	Carr Fastener
CAN	Cannon Electrics Pty. Ltd.
CIN	Cinch
D	Ducon Condensor Pty. Ltd.
DAR	Darstan
DIS	Distributors Corporation Pty. Ltd.
ELN	Elna Capacitors (Sonar Elec. P/L)
ETD	Electron Tube Dist.
F	Fairchild Australia Pty. Ltd.
GRA	General Radio Agencies
GE	General Electric (USA)
GEC	General Electric Co. (UK)
GES	General Electronic Services
GL	Grelco
HW	Hurtle Webster
HOL	R.G. Holloway
H	Haco Distributors (National)
J	Jabel
McH	McKenzie & Holland (Westinghouse)
MAS	Master Instrument Co. Pty. Ltd.
MUL	Mullard (Aust.) Pty. Ltd.
MOR	Morganite (Aust.) Pty. Ltd.
MSP	Manufacturers Special Products (AWA)
McM	McMurdo (Aust.) Pty. Ltd.
MOT	Motorola
NU	Nu Vu Pty. Ltd.
NAU	A.G. Naunton Pty. Ltd.
PA	Painton (Aust.) Pty. Ltd.
PAL	Paton Elect. Pty. Ltd.
PI	Piher Resistors (Sonar Electronics)
PW	Precision Windings Pty. Ltd.
PH	Philips Electrical Industries Pty. Ltd.
PL	Plessey Pacific
PV	Peaston Vic.
RC	Radio Corporation (Electronic Inds.)
RCA	Radio Corporation of America
RHC	R.H. Cunningham
STC	Standard Telephone & Cables
SI	Siemens Electrical Industries
SIM	Simonson Pty. Ltd.
SE	Selectronic Components
TR	Trimax Erricson Transformers
TI	Texas Instruments Pty. Ltd.
TH	Thorn Atlas
UC	Union Carbide
W	Wellyn Resistors (Cannon Elec.P/L)
WH	Westinghouse
Y	F.L. Yott Pty. Ltd.
Z	Zephyr Prod. Pty. Ltd.

B.W.D. ELECTRONICS PTY. LTD. - PARTS LIST MODEL bwd 207A

CCT Ref	DESCRIPTION				Mfr. or Supply	PART No.	
		RESISTORS					
R1	1KΩ	½W	5%	CC	P1		
R2	1KΩ	½W	5%	WW	HW		
R3	0.2Ω	4W	5%	WW	HW		
R4	0.2Ω	4W	5%	WW	HW		
R5							
R6	2.7KΩ	½W	5%	WW	HW		
R7	2.7KΩ	½W	5%	WW	HW		
R8	220Ω	1W	5%	CC	P1		
R9	56Ω	½W	5%	CC	P1		
R10	15KΩ	½W	5%	CC	P1		
R11	6.8KΩ	½W	5%	WW	HW		
R12	4.7KΩ	½W	5%	CC	P1		
R13	33Ω	½W	5%	CC	P1		
R14							
R15	1.8KΩ	½W	5%	CC	P1		
R16							
R17	1.2KΩ	½W	5%	CC	P1		
R18							
R19							
R20	6.8KΩ	½W	5%	CC	P1		
R21	1KΩ	½W	5%	CC	P1		
R22							
R23							
R24	0.2Ω	4W	5%	WW	HW		
R25	0.2Ω	4W	5%	WW	HW		
R26							
		CAPACITORS					
C1	64μF	64V	ELEC		PH	C436AR/H64	
C2	80μF	25V	ELEC		PH	C426AR/F80	
C3	0.47μF	160V	PYE		AC		
C4	0.00047μF	160V	PYE		AC		
C5	1μF	63V	PYE		WIMA	MKS	
C6	50μF	150V	ELEC		PH	C436AR/H50	
C7	5000μF	25V	ELEC		D	EJC/N900	
C8	5000μF	25V	ELEC		D	EJC/N900	
C9	5000μF	25V	ELEC		D	EJC/N900	
C10	5000μF	25V	ELEC		D	EJC/N900	
		DIODES					
D1	100V	PIV	500mA	Si	STC	EM401	
D2	200V	PIV	15A	Si	PH	BYX21/200	
D3	200V	PIV	15A	Si	PH	BYX21/200	

CWT Ref	DESCRIPTION				Mfr. or Supply	PART No.	
		DIODES					
D4	200V	PIV	15A	Si	PH	BYX21/200	
D5	200V	PIV	15A	Si	PH	BYX21/200	
D6	12V	400mW	ZENER	Si	PH	BZY94/C12	
D7	6.2V	400mW	ZENER	Si	PH	BZY88/C6V2	
D8	100V	PIV	500mA	Si	STC	EM401	
		POTENTIOMETERS					
RV1	100Ω	WW	var	preset	DAR	P109	
RV2	100Ω	WW	var	preset	DAR	P109	
RV3							
RV4	1KΩ	WW2W	var		NAU		
RV6	500Ω	WW	var	preset	DAR	P106	
RV7	1KΩ	cd	var		ELN		
		SEMICONDUCTORS					
I C	μA723C				F	U5R7723393	
Q1	NPN	Si				MJE340	
Q2	NPN	Si				2N3055	
Q3	NPN	Si				2N3055	
Q4	NPN	Si				2N3055	
Q5	NPN	Si				2N3055	
Q6	NPN	Si				2N3055	
		SUNDRY					
S1	DPST	TOOGLE	SW	240V AC5A	AWA	8370/K8	
F1	2A	DELAY FUSE			Y	3AG	
B1	240V	NEON INDICATOR			AMP	380711-4	
	POWER TRANSFORMER				BWD	T88	

R 33	
C 11	
D 9	
Q 6	

MODIFICATION	
ISSUE 2 TRACED	4-12-69
ISSUE 3	2-70

CONTROLS

S1 A & B	MAINS	ON-OFF		
RV1	O/LOAD	CURRENT	PRESET	
RV2	AMMETER	CAL.	PRESET	
RV4	OUTPUT	VOLTAGE	PRESET	
RV5	OUTPUT	VOLTAGE	COARSE	CONTROL
RV6	FOLDBACK	CURRENT	PRESET	
RV7	OUTPUT	VOLTAGE	FINE	CONTROL

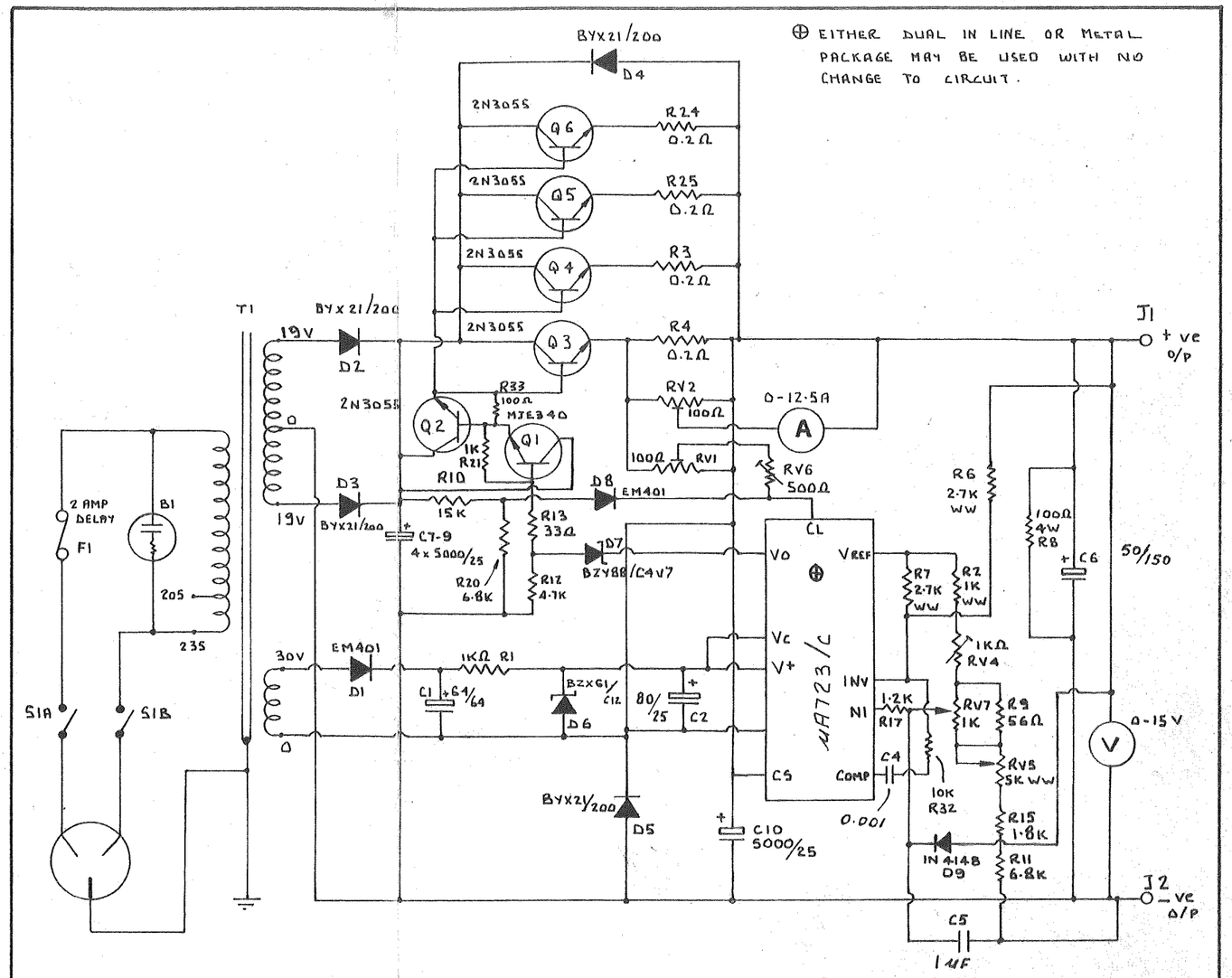

ISSUE	207A	BWD ELECTRONICS P/L MELBOURNE AUSTRALIA	DRG N°
4 / 9-70	DRAWN BWD TRACED MA. CHECKED	MODEL 207 A SUPPLY 10-15V 10A	777