TECHNICAL INFORMATION AND SERVICE DATA

MANUFACTURERS AWA SUPERVISED SERVICE

ISSUED BY AMALGAMATED WIRELESS (AUSTRALASIA) LTD.

A.W.A.
Model B61
STEREOPHONIC RADIOLAGRAM

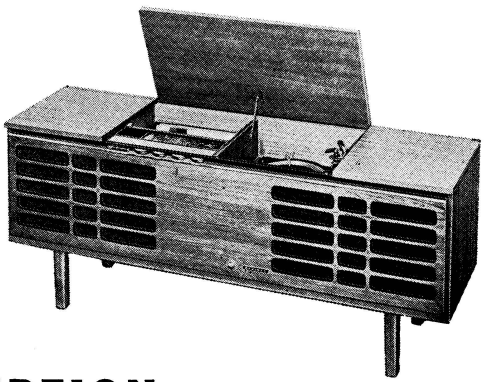

GENERAL DESCRIPTION

Model B61 is a 15 transistor, A.C. operated stereophonic radiogram designed for the reception of the Medium Wave Broadcasting Band and for the reproduction of both monophonic and stereophonic recordings. The chassis consists of a 3 transistor printed board tuner and a 12 transistor hand wired stereo amplifier. Provision has been made for plugging in a microphone, tape recorder and extension speakers.

ELECTRICAL AND MECHANICAL SPECIFICATIONS

Frequency Range ..... 520-1,650 kHz
Intermediate Frequency ..... 455 kHz
Power Supply Rating ..... 220-260V A.C. 50 Hz
Power Consumption:
Receiver ..... 20 watts
Record Changer ..... 20 watts
Undistorted Power Output ..... 6 Watts per channel
Speakers (1 per channel):
12″ Low Frequency Unit (8 ohms) 53329
7″ x 5″ Mid Frequency Unit (15 ohms) 53345
2″ High Frequency Unit (15 ohms) 52853
Dimensions:
Height ..... 24⅜″
Width ..... 58½″
Depth ..... 15¼″
Weight ..... 90 lbs.

Transistor and Diode Complement:

AS300	Converter	
AS300	1st I.F. Amplifier	
AS302	2nd I.F. Amplifier	
BC109	1st Audio Amplifier	per channel.
BC109	2nd Audio Amplifier	per channel.
AC126	3rd Audio Amplifier	per channel.
AS204	Driver	per channel.
AD162	Complementary Symmetry Output	per channel.
AD161	Complementary Symmetry Output	per channel.
OA95	Signal Clamp Diode	
OA95	Overload Diode	
IN87A	Detector	
IN3193	Rectifier	
IN3193	Rectifier	

CHASSIS REMOVAL.
Remove the cabinet back.
Disconnect the speaker, pick-up input and phono motor plugs.
Remove the changer compartment and bezel lamp holders from their brackets and pull the leads into the main chassis compartment.
The chassis assembly is secured by two screws through the rear of the chassis well. Removal of these enables the chassis to be lifted clear of the cabinet.

DIAL SCALE AND DIAL LAMP REPLACEMENT.
Remove the chassis as above.
Remove five screws securing the escutcheon and dial scale assembly to the chassis.
The dial scale is hold in position by two screws.
Removal of these enables the dial scale and dial lamps to be replaced.

RECORD CHANGER REMOVAL.
Remove the cabinet back and disconnect the phono motor and pick-up input plugs.
Situated underneath the base board are two screws each fitted with a spring clip. Swing the clips over until they are parallel to the screws and the record changer will be free to lift from the cabinet.

DRIVE CORD REPLACEMENT.
Remove the chassis and escutcheon as above.
The accompanying diagram shows the route of the cord and the method of attachment.

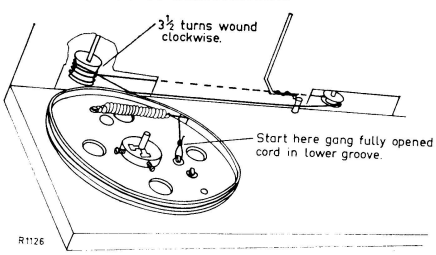

Adjustment of Output Idling Current:

This adjustment is made during manufacture and need only be checked if any of the following conditions arise:-

1. Any transistor or resistor is replaced in audio amplifier stages.
2. Cross-over distortion is present.

The adjustment is as follows:—

Disconnect the collector leads to VT13 and VT15 and insert an ammeter between each lead and its corresponding collector. With the volume control set in its minimum (anti-clockwise) position, adjust RV5 and RV6 to give a reading of 12-15mA on the meter for each channel.

SPECIAL NOTE:

VT11 and VT12 driver stages use AS204 transistors. The AS204 is an n-p-n silicon planar epitaxial transistor in which the collector is connected to the shell for heat dissipation. In its mode of operation in this circuit the shell temperature may rise 90°C above ambient which is well within its rating. This temperature rise can obviously cause burns to the skin and due caution should be exercised during servicing.

N.B. AS208 transistors have a lower saturation current but may be substituted for AS204 types in this receiver.

D.C. RESISTANCE OF WINDINGS

Winding	D.C. Resistance in ohms
Ferrite Rod Assembly (TR1):	
Primary	1
Secondary	*
Oscillator Transformer (TR2):	
Primary	4
Secondary	*
1st I.F. Transformer (TR3):	
Primary	3
Secondary	*
2nd I.F. Transformer (TR4):	
Primary	3
Secondary	*
3rd I.F. Transformer (TR5):	
Primary	3
Secondary	*
Power Transformer (TR6):	
Primary	100
Secondary	1.5
H.T. Filter Choke (L2)	12

* Less than 1 ohm.

The above readings were taken on components from a standard chassis, but substitution of materials during manufacture may cause variations and it should not be assumed that a component is faulty if a slightly different reading is obtained.

MECHANICAL REPLACEMENT PARTS

Item	Part No.
CABINET FITTING	
Badge, A.W.A.	67271/002
Cabinet	60293
Cabinet, Back	67593
Diffuser, Light, Record Compartment	67594
Fret, Cloth	212186
Hinge, Lid	45914/003
Indicator, Bezel	45916
Legs (4 packed)	69155
Microphone Assembly	67605
Nameplate	67259
Record Changer Assembly	69151
Cartridge, Sonotone Ceramic	9TA
Changer, Garrard 60 MK II	
Stylus Replacement Diamond/Sapphire	N9TA D/S
Shield, Light (2)	45598
Stay, Lid Support	804004
Trim Bar, Horizontal	67616
CHASSIS FITTING	
Clamp, Body, Power Cable	208056
Clamp, Lock, Power Cable	208057
Dial Backing	67568
Dial, Scale	65035
Drive Drum Assembly	62219
Escutcheon Assembly	69160
Escutcheon	67578
Trim, Metal Cal.	69161
Gang Mounting:	
Grommet (3)	389262
Screw, 4BA x 5/16" Ch. Hd. (3)	714010
Spacer (3)	35923
Washer, I.T.L. (9)	921204
Washer, Plain (3)	15727
Knob Assembly, Controls (4)	67574
Knob Assembly, Push-button (On Switch Ass'y)	
Knob Assembly, Tuning	67572
Pointer Assembly	67588
Pulley	1730
Spindle Assembly, Tuning	67570
Spring, Drive Cord	40540
Support, Aerial (2)	66471

NOTE: When ordering spares, always quote the above Part Numbers, and in the case of coloured parts, such as knobs, etc., also quote the colour.

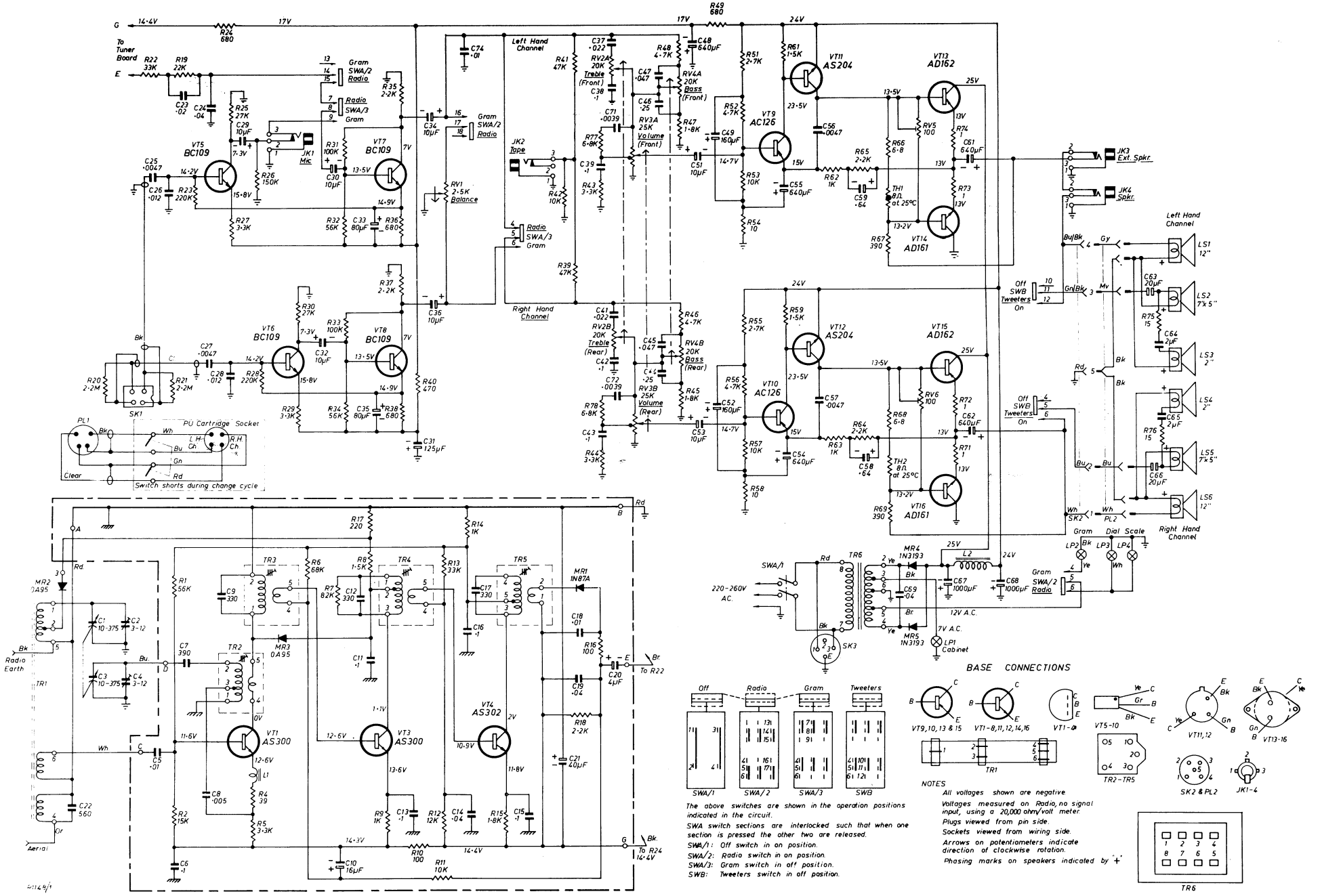

Circuit Variations:
VT5-8 may also be type AS149.
MR2-3 now type OA91.

VT11 } May also be type AS208.
VT12 }

In early chassis RV1 was a 10K control. Present 2.5K control gives greater effect in mid range.

CODE No.	DESCRIPTION			PART No.
	RESISTORS			
	All resistors composition type unless otherwise stated.			
R1	56K ohms	± 5%	¼ watt	
R2	15K ohms	±10%	½ watt	
R3	Not used			
R4	39 ohms	±10%	½ watt	
R5	3.3K ohms	±10%	½ watt	
R6	68K ohms	± 5%	¼ watt	
R7	82K ohms	±10%	½ watt	
R8	1.5K ohms	±10%	½ watt	
R9	1K ohms	±10%	½ watt	
R10	100K ohms	±10%	½ watt	
R11	10K ohms	±10%	½ watt	
R12	12K ohms	±10%	½ watt	
R13	33K ohms	±10%	½ watt	
R14	1K ohms	±10%	½ watt	
R15	1.8K ohms	±10%	½ watt	
R16	100 ohms	±10%	½ watt	
R17	220 ohms	±10%	½ watt	
R18	2.2K ohms	±10%	½ watt	
R19	22K ohms	± 5%	½ watt	
R20	2.2 Megohms	± 5%	½ watt	
R21	2.2 Megohms	± 5%	½ watt	
R22	33K ohms	± 5%	½ watt	
R23	220K ohms	± 5%	½ watt	
R24	680 ohms	± 5%	½ watt	
R25	27K ohms	± 5%	½ watt	
R26	150K ohms	± 5%	½ watt	
R27	3.3K ohms	± 5%	½ watt	
R28	220K ohms	± 5%	½ watt	
R29	3.3K ohms	± 5%	½ watt	
R30	27K ohms	± 5%	½ watt	
R31	100K ohms	± 5%	½ watt	
R32	56K ohms	± 5%	½ watt	
R33	100K ohms	± 5%	½ watt	
R34	56K ohms	± 5%	½ watt	
R35	2.2K ohms	± 5%	½ watt	
R36	680 ohms	± 5%	½ watt	
R37	2.2K ohms	± 5%	½ watt	
R38	680 ohms	± 5%	½ watt	
R39	47K ohms	±10%	½ watt	
R40	470 ohms	± 5%	½ watt	
R41	47K ohms	±10%	½ watt	
R42	10K ohms	± 5%	½ watt	
R43	3.3K ohms	± 5%	½ watt	
R44	3.3K ohms	± 5%	½ watt	
R45	1.8K ohms	± 5%	½ watt	
R46	4.7K ohms	± 5%	½ watt	
R47	1.8K ohms	± 5%	½ watt	
R48	4.7K ohms	± 5%	½ watt	
R49	680K ohms	± 5%	½ watt	
R50	Not used			
R51	2.7K ohms	± 5%	½ watt	
R52	4.7K ohms	± 5%	½ watt	
R53	10K ohms	± 5%	½ watt	
R54	10 ohms	± 5%	½ watt	W.W.
R55	2.7K ohms	± 5%	½ watt	
R56	4.7K ohms	± 5%	½ watt	
R57	10K ohms	± 5%	½ watt	
R58	10 ohms	± 5%	½ watt	W.W.
R59	1.5K ohms	± 5%	½ watt	
R60	Not used			
R61	1.5K ohms	± 5%	½ watt	
R62	1K ohms	± 5%	½ watt	
R63	1K ohms	± 5%	½ watt	
R64	2.2K ohms	± 5%	½ watt	
R65	2.2K ohms	± 5%	½ watt	
R66	5.6 ohms	± 5%	½ watt	W.W.
R67	390 ohms	±10%	1 watt	
R68	5.6 ohms	± 5%	½ watt	W.W.
R69	390 ohms	±10%	1 watt	
R70	Not used			
R71	1 ohm	±10%	½ watt	W.W.
R72	1 ohm	±10%	½ watt	W.W.
R73	1 ohm	±10%	½ watt	W.W.
R74	1 ohm	±10%	½ watt	W.W.
R75	15 ohms	±10%	½ watt	W.W.
R76	15 ohms	±10%	½ watt	W.W.
R77	6.8K ohms	± 5%	½ watt	
R78	6.8K ohms	± 5%	½ watt	
RV1	2.5K ohms Curve A carbon, Balance			620047
RV2A	20K ohms Curve A carbon } Treble			620840
RV2B	20K ohms Curve A carbon } Treble			
RV3A	25K ohms Curve S33 carbon } Volume			620853
RV3B	25K ohms Curve S33 carbon } Volume			
RV4A	20K ohms Curve A carbon } Bass			620841
RV4B	20K ohms Curve A carbon } Bass			
RV5	100 ohms W.W. Idling Current Adjustment			620000
RV6	100 ohms W.W. Idling Current Adjustment			620000
	CAPACITORS			
C1	10-375pF Tuning Aerial			60090
C2	3-12pF Trimmer Aerial			231136
C3	10-375pF Tuning Oscillator			60090
C4	3-12pF Trimmer Oscillator			231136
C5	0.01μF ±20% 200VW AEE W99			
C6	0.1μF +80% —20% 25VW Hi-K disc			
C7	390pF ±2½% 630VW polystyrene			
C8	0.005μF ±20% 200VW AEE W99			
C9	330pF +10% —7½% N750 disc			
C10	16μF 10VW Electrolytic			228878
C11	0.1μF +80% — 20% 25VW Hi-K disc			
C12	330pF +10% —7½% N750 disc			
C13	0.1μF +80% —20% 25VW Hi-K disc			
C14	0.04μF ±20% 200VW AEE W99			
C15	0.1μF +80% —20% 25VW Hi-K disc			
C16	0.1μF +80% —20% 25VW Hi-K disc			
C17	330pF +10% —7½% N750 disc			
C18	0.01μF ±20% 200VW AEE W99			
C19	0.04μF ±20% 200VW AEE W99			
C20	4μF 10VW Electrolytic			228189
C21	560pF ±5% 125VW polystyrene			
C22	40μF 16VW Electrolytic			229552
C23	0.02μF ±20% 200VW AEE W99			
C24	0.04μF ±20% 200VW AEE W99			
C25	.0047μF ±10% 400VW polyester			
C26	0.012μF ±10% 400VW polyester			
C27	.0047μF ±10% 400VW polyester			
C28	0.012μF ±10% 400VW polyester			
C29	10μF 16VW Electrolytic			228756
C30	10μF 16VW Electrolytic			228756
C31	125μF 16VW Electrolytic			229734
C32	10μF 16VW Electrolytic			228756
C33	80μF 2.5VW Electrolytic			229672
C34	10μF 16VW Electrolytic			228756
C35	80μF 2.5VW Electrolytic			229672
C36	10μF 16VW Electrolytic			228756
C37	0.022μF ±10% 400VW polyester			
C38	0.1μF ±20% 200VW AEE W48			
C39	0.1μF ±20% 200VW AEE W48			
C40	Not Used			
C41	0.022μF ±10% 400VW polyester			
C42	0.1μF ±20% 200VW AEE W48			
C43	0.1μF ±20% 200VW AEE W48			
C44	0.25μF ±20% 200VW AEE W48			
C45	0.047μF ±10% 160VW polyester			
C46	0.25μF ±20% 200VW AEE W48			
C47	0.047μF ±10% 160VW polyester			
C48	640μF 16VW Electrolytic			229880
C49	160μF 25VW Electrolytic			229842
C50	Not Used			
C51	10μF 16VW Electrolytic			228756
C52	160μF 25VW Electrolytic			229842
C53	10μF 16VW Electrolytic			228756
C54	640μF 16VW Electrolytic			229880
C55	640μF 16VW Electrolytic			229880
C56	0.0047μF ±10% 400VW polyester			
C57	0.0047μF ±10% 400VW polyester			
C58	0.64μF 64VW Electrolytic			227620
C59	0.64μF 64VW Electrolytic			227620
C60	Not Used			
C61	640μF 16VW Electrolytic			229880
C62	640μF 16VW Electrolytic			229880
C63	20μF 12VW Electrolytic			229255
C64	2μF ±20% 200VW AEE W48			
C65	2μF ±20% 200VW AEE W48			
C66	20μF 12VW Electrolytic			229255
C67	1000μF 40VW Electrolytic			229918
C68	1000μF 25VW Electrolytic			229909
C69	0.04μF ±20% 200VW AEE W99			
C70	Not Used			
C71	0.0039μF ±10% 400VW polyester			
C72	0.0039μF ±10% 400VW polyester			
C73	Not Used			
C74	0.01μF ±20% 200VW AEE W99			
	TRANSFORMERS			
TR1	Ferrite Rod Aerial Assembly			69153
TR2	Oscillator Transformer			54157
TR3	1st I.F. Transformer			54161
TR4	2nd I.F. Transformer			54163
TR5	3rd I.F. Transformer			54165
TR6	Power Transformer			54432

TRANSISTORS AND DIODES

VT1	AS300	VT8	BC109	VT15	AD162
VT2	Not Used	VT9	AC126	VT16	AD161
VT3	AS300	VT10	AC126	MR1	1N87A
VT4	AS302	VT11	AS204	MR2	OA95
VT5	BC109	VT12	AS204	MR3	OA95
VT6	BC109	VT13	AD162	MR4	1N3193
VT7	BC109	VT14	AD161	MR5	1N3193

CODE No.	DESCRIPTION	PART No.
	MISCELLANEOUS	
JK1	Mic Jack }	
JK2	Tape Jack }	417405
JK3	Ext. Spkr. Jack }	
JK4	Speaker Jack }	
LP1	Pilot Lamp Cabinet 12V }	
LP2	Pilot Lamp Gram 12V }	428147
LP3	Pilot Lamp Dial Scale 12V }	
LP4	Pilot Lamp Dial Scale 12V }	
LS1	Speaker 12″	53329
LS2	Speaker 7″ x 5″	53345
LS3	Speaker 2″	52853
LS4	Speaker 2″	52853
LS5	Speaker 7″ x 5″	53345
LS6	Speaker 12″	53329
PL1	Phono Plug	29696
PL2	Speaker Plug	234071
SK1	Phono Socket	793287
SK2	Speaker Socket	794563
SK3	Phono Motor Socket	28313
SWA	Off/Radio/Gram Switch }	72000/019
SWB	Tweeters ON/OFF }	
TH1	8 ohms at 25°C NTC Thermistor	893708
TH2	8 ohms at 25°C NTS Thermistor	893708
L1	Ferrite Beads	132011
L2	H.T. Filter Choke	54434

Notes: The diagram represents the view from the wiring side of the printed board.
Stipple area indicates printed wiring.
Red indicates components and leads mounted on the remote side of the board.
Black indicates those components and leads mounted on the wiring side or completely removed from the board.
All voltages shown are negative with respect to the positive terminal of the battery and measured with no signal input and volume maximum clockwise using a 20,000 ohm/volt meter.

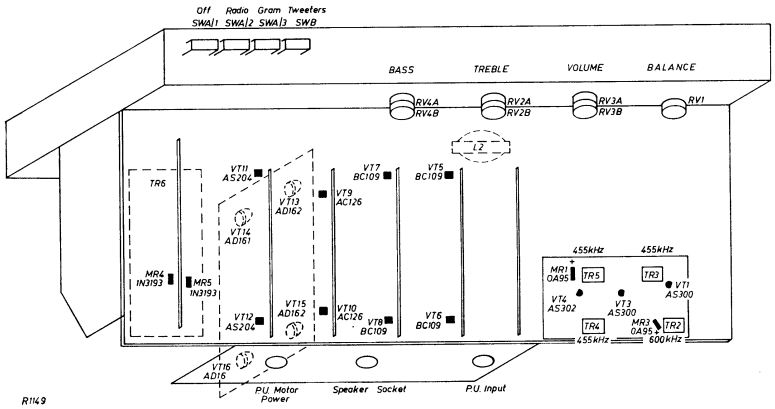

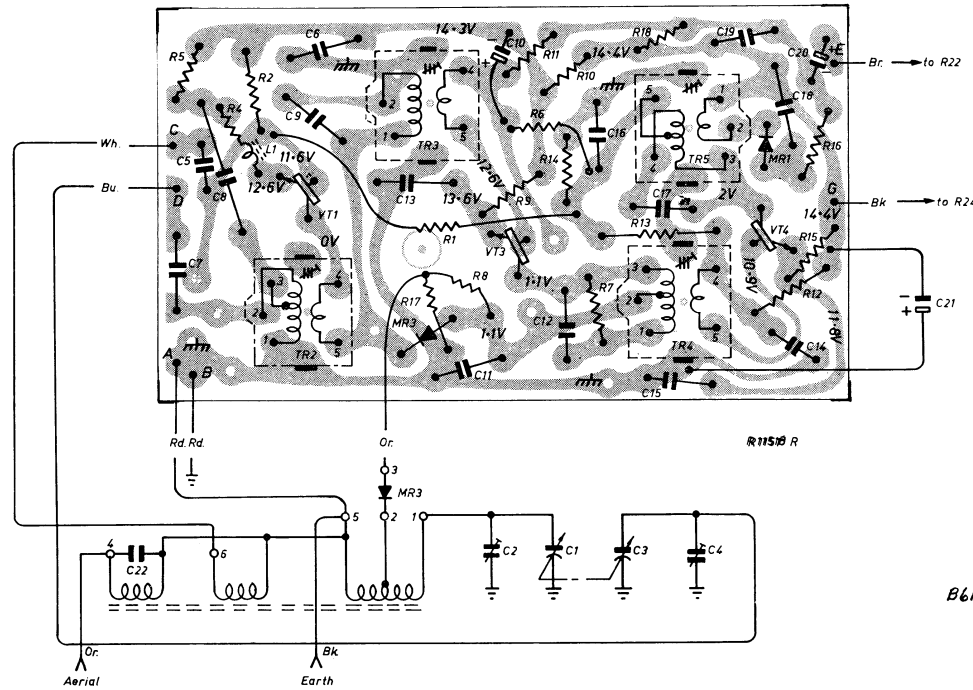

ALIGNMENT PROCEDURE

Testing Instruments:

I.F. Alignment Tool No. 39463.

Signal Generator—Modulated 400 c.p.s. or Modulated Oscillator.

If the modulated oscillator is used, connect a 220K ohms non-inductive resistor across the output terminals.

Output Meter—7 ohms impedance:

In order to avoid damage to output transistors and associated circuitry when the chassis is being tested, it is necessary to provide a load on both audio amplifiers. Hence, a 7 ohms, 6 watt resistor should be connected to the output terminals of the amplifier which is not loaded with the output meter.

Set the balance control to that position which gives maximum audio output on the output meter.

For all alignment operations keep the generator output as low as possible to avoid a.g.c. action and set the volume control in the maximum clockwise position.

ALIGNMENT TABLE

ORDER	CONNECT GENERATOR TO:	GENERATOR TO:	TUNE RECEIVER TO:	ADJUST FOR MAX. PEAK OUTPUT
1	Aerial Section of Gang	455 kHz	Gang fully closed	Cores in TR5, TR4 and TR3
Repeat adjustments until maximum output is obtained.				
2	Inductively coupled to Rod Aerial*	600 kHz	600 kHz	L.F. Osc. Core Adj. (TR2)†
3	Inductively coupled to Rod Aerial*	1,650 kHz	Gang fully opened	Osc. Trimmer (C6)
4	Inductively coupled to Rod Aerial*	1,500 kHz	1,500 kHz	Aer. Trimmer (C5)

† Rock the tuning control back and forth through the signal.

* A coil comprising 3 turns of 16 gauge D.C.C. wire about 12 inches in diameter should be connected between the output terminals of the test instrument, placed concentric with the rod aerial and distant not less than 1 foot from it.