MANUFACTURERS AWA SUPERVISED SERVICE

A.W.A.

RADIOLA EIGHT TRANSISTOR

Model B42

ISSUED BY
AMALGAMATED WIRELESS (AUSTRALASIA) LIMITED

GENERAL DESCRIPTION

The B42 is an eight transistor, battery operated superheterodyne portable receiver.

Features of design include: extended frequency range to receive station 2UV "University of the Air"; ferrite rod aerial, provision for the connection of car radio aerial or external aerial; provision for Battery Saver connection; high gain i.f. transformers; high sensitivity.

ELECTRICAL AND MECHANICAL SPECIFICATIONS

Frequency Range ..... 525-1,770 Kc/s

Intermediate Frequency ..... 455 Kc/s

Battery Complement ..... 9 volt battery type 2512

Battery Consumption:
- For zero audio output ..... 14 mA
- For 50 mW audio output ..... 35 mA
- For full audio output ..... 110 mA

Loudspeaker:
- Permanent Magnet No. 50090.
- V.C. Impedance 80 ohms centre tapped at 400 c.p.s.
- Undistorted Power Output ..... 400 mW

Controls:
- Tuning Control—front left-hand.
- On/Off Volume Control—right-hand side.

Transistor Complement:

AWV 2N1636 or 2N1639	Converter
AWV 2N406	Overload
AWV 2N1634 or 2N1638	1st I.F. Amplifier
AWV 2N1634 or 2N1638	2nd I.F. Amplifier
AWV 2N406	1st Audio
AWV 2N408	Driver
AWV 2N217S	Output
AWV 2N217S	Output

A diode (1N87A, or equivalent) is also used as Audio Detector and A.G.C.

Dimensions:

Height	$5\frac{3}{8}''$
Width	$9\frac{3}{8}''$
Depth	$2\frac{3}{4}''$
Weight (with battery)	4 lbs.

Component Removal and Replacement:

Always use a soldering iron which is very clean and just hot enough to achieve a quick soldering operation as prolonged application of heat will damage the printed wiring.

Before installing a replacement component, it is advisable to clear the contact hole by heating the contact area and pushing a tapered stainless steel wire into the hole. Small screwdriver kits are available on the market containing a suitable spiked bit.

To remove an I.F. transformer or oscillator coil it is desirable to have a suitable tip on the soldering iron as shown in Fig. 1. All seven connections on the transformer may be freed simultaneously and the transformer pulled from the board. This is the only satisfactory method: any other method using smaller irons will generally result in damage to either the board or the transformer or to both.

Transistors may be removed in a similar manner to the I.F. transformers using the 3/16″ bit on the ORYX iron.

The coupling transformer may be removed by first disconnecting the five leads and then moving each mounting lug by approximately 1/32″ at a time until both lugs are free.

CHASSIS REMOVAL

Remove the volume control knob which is a push-on fit.

Remove the tuning knob locking screw and tuning knob.

Open the cabinet back and remove the battery.

Remove the four 6BA nuts, lock washers and plain washers holding the chassis to the front escutcheon and lift the chassis and board assembly from the cabinet.

Remove the four screws and lock washers securing the board, lift the ferrite rod from its supports and the board may be raised and turned through 90° to give access to both sides for servicing.

Installation is the reverse of the above procedure.

When replacing the tuning knob, turn the gang fully clockwise. Place the knob on the gang spindle and align the pointer across the indicating line on the dial scale.

Secure the knob with the locking screw without disturbing the pointer setting.

Switch the receiver on and tune to some known station. The pointer should fall across the centre of the station markings. If it does not, loosen the locking screw, re-adjust the tuning knob to accommodate the error and re-tighten the locking screw.

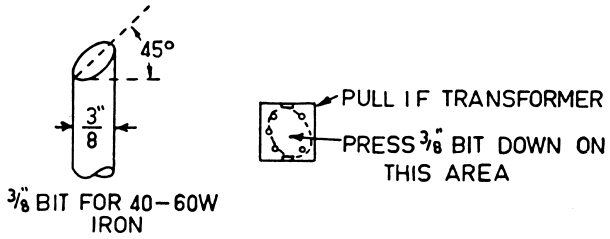

Fig. 1—Soldering Bit and I.F. Removal

D.C. RESISTANCE OF WINDINGS

Winding	D.C. Resistance
Aerial Choke L1	1
Ferrite Rod Assembly TR1:	
Primary 1-2	1.5
Secondary 6-7	*
Tertiary 4-5	*
Oscillator Transformer TR2:	
Primary 3-5	1.2
Secondary 1-4	*
1st, 2nd and 3rd I.F. Transformers:	
Primary	1.5
Secondary	*
Coupling Transformer:	
Primary	540
Secondary	540

* Less than 1 ohm.

The above readings were taken on a standard chassis, but substitution of materials during manufacture may cause variations and it should not be assumed that a component is faulty if a slightly different reading is obtained.

ALIGNMENT PROCEDURE

Manufacturer's Setting of Adjustments:

The Receiver is tested by the manufacturer with precision instruments and all adjusting screws are sealed. Re-alignments should be necessary only when components in tuned circuits are repaired or replaced or when it is found that the seals over the adjusting screws have been broken. It is especially important that the adjustments should not be altered unless in association with the correct testing instruments listed below.

Under no circumstances should the plates of the ganged tuning capacitor be bent, as the unit is accurately aligned during manufacture and can only be re-adjusted by skilled operators using special equipment.

For all alignment operations, keep the generator output as low as possible to avoid a.g.c. action and set the volume control in the maximum clockwise position.

Testing Instruments:

(1) Signal Generator, or

(2) Modulated Oscillator.

If the modulated oscillator is used, connect a .22 megohms non-inductive resistor across the output terminals.

(3) No output transformer is used in this receiver since the speaker has a centre tapped 80 ohm voice coil and is connected directly to the collectors on the output transistors. For output measurement, if an indication only is required, Output Meter type 2M8832, switched to 5000 ohms and connected across the output collectors, should be adequate. For correct reading of power output an A.C. meter, with neither probe earthed, connected across the output collectors will measure the voltage across the 80 ohms load. The normal alignment level of 50mW occurs when 1.4 volts is indicated on the A.C. voltmeter.

(4) I.F. Alignment Tool—Part No. 39462.

ALIGNMENT TABLE

ORDER	CONNECT "HIGH" SIDE OF GENERATOR TO:	TUNE GENERATOR TO:	TUNE RECEIVER TO:	ADJUST FOR MAX. PEAK OUTPUT
1	Aerial section of Gang	455 Kc/s	Gang fully closed	Cores in TR5, TR4 and TR3
	Repeat adjustment until maximum output is obtained			
2	Inductively coupled to Rod Aerial*	600 Kc/s	600 Kc/s	L.F. Osc. Core Adj. (TR2)†
3	Inductively coupled to Rod Aerial*	1,770 Kc/s	Gang fully open	H.F. Osc. Adj. (C4)
4	Inductively coupled to Rod Aerial*	1,500 Kc/s	1,500 Kc/s	H.F. Aerial Adj. (C3)
	Repeat steps 2, 3 and 4			

* A coil comprising three turns of 16 gauge D.C.C. wire and about 12 inches in diameter should be connected between the output terminals of the test instrument, placed concentric with the rod aerial and distant not less than one foot from it.

† Rock the tuning control back and forth through the signal.

CIRCUIT CODE

CODE No.	DESCRIPTION	PART No.
	RESISTORS	
	All Resistors ±10% carbon unless otherwise stated.	
R1	10K ohms ½ watt	612025
R2	56K ohms ½ watt	615161
R3	1.8K ohms ½ watt	609077
R4	470 ohms ½ watt	606588
R5	68K ohms ½ watt	615494
R6	3.9K ohms ½ watt	610556
R7	680 ohms ½ watt	607281
R8	100 ohms ½ watt	604031
R9	3.9K ohms ½ watt	610556
R10	10K ohms ½ watt	612025
R11	56K ohms ½ watt	615161
R12	1K ohm ½ watt	608025
R13	820 ohms ½ watt	607665
R14	100 ohms ½ watt	604031
R15	100 ohms ½ watt	604031
R16	6.8K ohms ½ watt	611526
R17	33K ohms ½ watt	614460
R18	5.6K ohms ½ watt	611293
R19	22K ohms ½ watt	613653
R20	22 ohms ½ watt	602320
R21	1.8K ohms ½ watt	609077
R22	2.7K ohms ½ watt	609862
R23	22K ohms ½ watt	613653
R24	120 ohms ½ watt	601077
R25	1K ohm ½ watt	608025
R26	4.7K ohms ½ watt	610932
R27	100 ohms ½ watt	604031
R28	5.6 ohms ½ watt	600724
R29	5.6 ohms ½ watt	600724
R30	39K ohms ½ watt	614684
R31	100 ohms ½ watt	604031
RV1	2.5K ohms log carbon, Volume W/S	620032
	CAPACITORS	
C1	10—200pf tuning Aerial	
C2	10—87pf tuning Osc.	
C3	3—12pf trimmer Aerial	62270
C4	3—12pf trimmer Osc.	
C5	0.005μf ±20% 200VW Hunts	226005
C6	0.01μf +80% —20% Hi-K	226372
C7	0.033μf +80% —20% 25VW disc	226741
C8	330pf ±5% N750 disc	223715
C9	25μf 3VW Electrolytic	229428
C10	0.1μf +80% —20% 25VW disc	227074
C11	2.2pf ±.5pf NPO disc	221494
C12	330pf ±5% N750 disc	223715
C13	0.033μf +80% —20% 25VW disc	226741
C14	0.1μf +80% —20% 25VW disc	227074
C15	0.1μf +80% —20% 25VW disc	227074
C16	0.033μf +80% —20% 25VW disc	226741
C17	2.2pf ±.5pf NPO disc	221494
C18	330pf ±5% N750 disc	223715
C19	75μf 10VW Electrolytic	229676
C20	0.1μf +80% —20% 25VW disc	227074
C21	0.1μf +80% —20% 25VW disc	227074
C22	0.01μf ±20% 200VW Hunts W99	228609
C23	0.25μf ±20% 200VW Hunts W48	229007
C24	25μf 3VW Electrolytic	229428
C25	20μf 10VW Electrolytic	229307
C26	100μf 3VW Electrolytic	229706
C27	100μf 3VW Electrolytic	229706
C28	0.01μf +80% —20% Hi-K 25VW disc	226372
C29	0.005 ±20% 200VW Hunts	226005
C30	320μf 10VW Electrolytic	229776
C31	0.5μf ±20% 200VW Hunts W48	229116
C32	Not Used	
C33	4μf 10VW Electrolytic	228189
	TRANSFORMERS	
TR1	Ferrite Rod	49252
TR2	Oscillator Coil	51636
TR3	1st I.F. Transformer	51272
TR4	2nd I.F. Transformer	51268
TR5	3rd I.F. Transformer	51270
TR6	Coupling Transformer	51145
L1	Aerial Choke (on TR1)	34336
	TRANSISTORS AND DIODES	
VT1	AWV 2N1639 or 2N1636	
VT2	AWV 2N1638 or 2N1634	
VT3	AWV 2N406	
VT4	AWV 2N1638 or 2N1634	
VT5	AWV 2N406	
VT6	AWV 2N408	
VT7	AWV 2N217S	
VT8	AWV 2N217S	
MR1	1N87A or equivalent	
	MISCELLANEOUS	
LS1	4″ Speaker	50090
TH1	AWV AS2 or 130 ohms at 25° C. N.T.C. Thermistor	
SW1	ON-OFF Switch (on RV1)	
PL1	Battery Plug	34625
JK1	Jack, External Power Supply	63629
SK1	Aerial Socket	63584

MECHANICAL REPLACEMENT PARTS

Item	Part No.
Chassis Mounting:	
Nut, 6BA (4 off)	493560
Washer, 6BA I.T.L. (4 off)	921206
Washer, 6BA Plain (4 off)	15722
Gang Mounting:	
Grommet (3 off)	389262
Lug, Earthing	439085
Screw, 4BA x 5/16", Ch. Hd. (3 off)	714010
Spacer (3 off)	35923
Washer, Plain (2 off)	13156
Support, L.H. Ferrite Rod	60933
Support, R.H. Ferrite Rod	63581
Cabinet Fitting:	
Case Assembly	65110
Escutcheon Assembly	65116
Dial Scale	65006
Fret	65117
Knob Assembly, Tuning	65122
Knob Assembly, OFF/Volume	65124
Screw, Tuning Knob Retaining	64982

NOTE: When ordering spares, always quote the above Part Numbers, and in the case of coloured parts such as knobs, etc., also quote the colour.

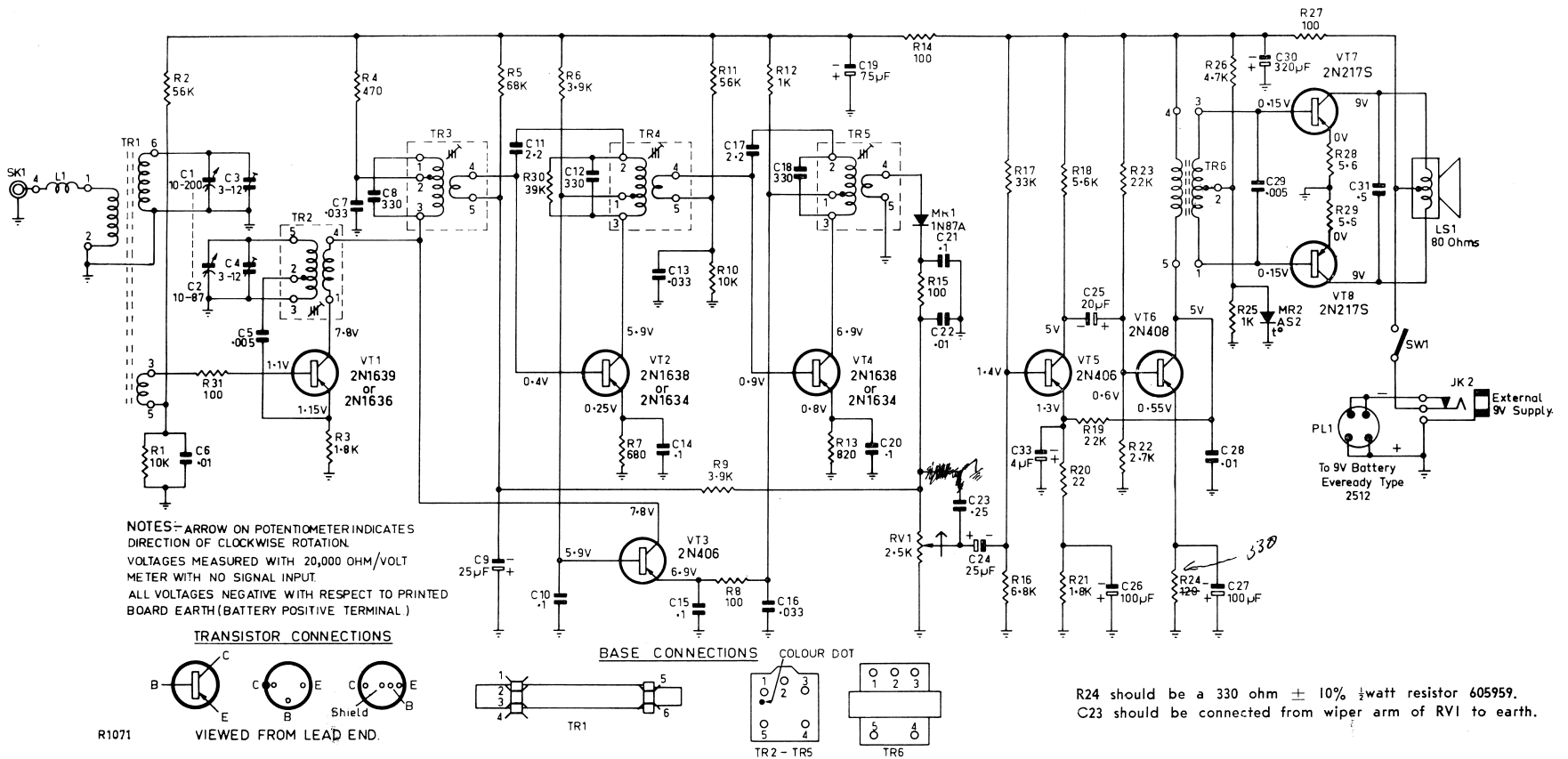

R24 should be a 330 ohm ± 10% ½watt resistor 605959.
C23 should be connected from wiper arm of RV1 to earth.

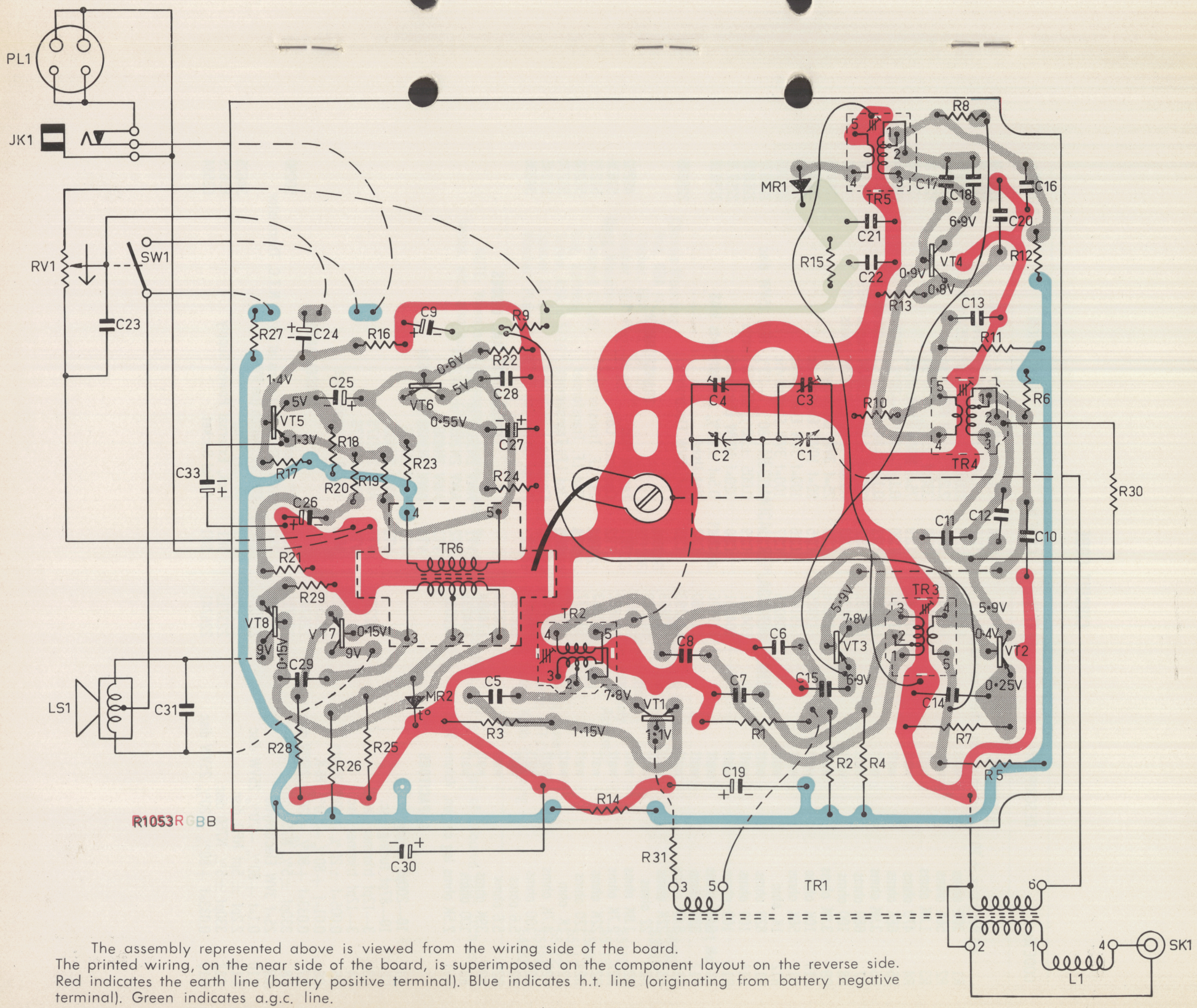

The assembly represented above is viewed from the wiring side of the board.
The printed wiring, on the near side of the board, is superimposed on the component layout on the reverse side. Red indicates the earth line (battery positive terminal). Blue indicates h.t. line (originating from battery negative terminal). Green indicates a.g.c. line.