TECHNICAL INFORMATION AND SERVICE DATA

MANUFACTURERS AWA SUPERVISED SERVICE

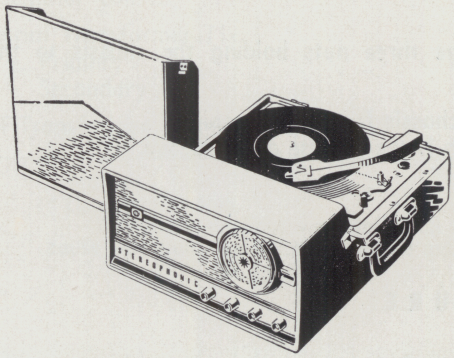

MODEL B13 PORTABLE STEREOPHONIC RADIOLAGRAM "THE BALALAIKA"

ISSUED BY
AMALGAMATED WIRELESS (AUSTRALASIA) LTD.

GENERAL DESCRIPTION

Model B13 is a six valve A.C. operated portable stereophonic radiogram designed for the reception of the Medium Wave Band and for the reproduction of both monophonic and stereophonic recordings.

Features of design include: Tandem volume and tone controls with closely matched resistive elements; matched audio amplifiers; feedback over audio stages; wide range tone control circuits.

ELECTRICAL AND MECHANICAL SPECIFICATIONS

Frequency Range ..... 540-1600 Kc/s (555-187.5 metres)

Intermediate Frequency ..... 455 Kc/s

Power Supply Rating ..... 200-260 volts A.C. 50 C.P.S.

Power Consumption:
- Receiver ..... 50 watts
- Record Player ..... 20 watts

Undistorted power output ..... 1.5 watts per channel

Loudspeakers:
- 5" Permanent Magnet (in cabinet) ..... No. 21547
- 5" Permanent Magnet (in lid) ..... No. 21643

Loudspeaker Transformers 21204G

V.C. Impedance ..... 15 ohms

Dimensions:

Weight—30 lbs.
Height—7"; Depth—17"; Width—14".

VALVE COMPLEMENT:

Radiotron 6BE6—Converter.
Radiotron 6N8—I.F. Amp., Detector, A.V.C.
Radiotron 12AX7—Two Channel Audio Amp.
Radiotron 6AQ5—Audio Output.
Radiotron 6AQ5—Audio Output.
Radiotron 6X4—Rectifier.

CONNECTION TO POWER SUPPLY:

The receiver should not be connected to any circuit supplying other than 200-260 volts A.C. at a frequency of 50 c.p.s.

Connections to the power transformer are shown below.

RED DOT INDICATES COMMON CONNECTION FOR ALL VOLTAGES

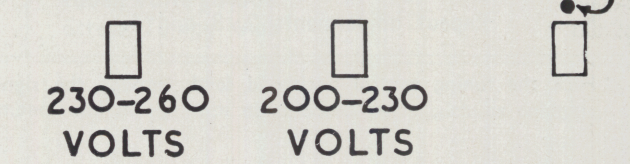

CHASSIS REMOVAL AND INSTALLATION

Remove the lid.

Remove the perforated metal cover. (All valves may be reached with this cover removed.)

Remove the wood screws holding the record player base plate, tilt the board back enough to unplug the interconnecting cables and remove the player completely.

Remove the four small control knobs, these being a push on fit.

Hold the tuning control knob steady and unscrew the centre retaining screw. Remove the outer knob and the pointer, the latter being a push on fit.

Loosen the screws securing the power and speaker lead clamps to the cabinet.

Unplug the aerial and earth panel from the rear of the cabinet.

Remove the three nuts holding the chassis to the cabinet.

Slide the chassis free of the cabinet.
Installation is the reverse of the above.

ALIGNMENT PROCEDURE

MANUFACTURER'S SETTING OF ADJUSTMENTS:

The receiver is tested by the manufacturer with precision instruments and all adjusting screws are sealed. Re-alignment should be necessary only when components in tuned circuits are repaired or replaced or when it is found that the seals over the adjusting screws have been broken. It is specially important that the adjustments should not be altered unless in association with the correct testing instruments listed below.

Under no circumstances should the plates of the ganged tuning capacitor be bent, as the unit is accurately aligned during manufacture and can only be re-adjusted by skilled operators using special equipment.

For all alignment operations, keep the generator output as low as possible to avoid A.V.C. action.

TESTING INSTRUMENTS:

(1) A.W.A. Junior Signal Generator, type 2R7003, or
(2) A.W.A. Modulated Oscillator, series J6726. If the modulated oscillator is used, connect a 0.22 megohm non-inductive resistor across the output terminals.
(3) A.W.A. Output Meter type 2M8832.

In order to avoid damage to output valves and associated circuitry when the chassis is being tested it is necessary to provide A.C. loading on both audio amplifiers. Hence a 15 ohm 3 watt resistor should be connected to the voice coil terminals of the amplifier which is not loaded with the output meter.

Set the balance control to the position which gives maximum audio output on the output meter.

Set the volume and tone controls to the maximum clockwise position.

ALIGNMENT TABLE

ALIGNMENT ORDER	CONNECT HIGH SIDE OF GENERATOR TO:	TUNE GENERATOR TO:	TUNE RECEIVER TO:	ADJUST FOR MAXIMUM PEAK OUTPUT:
1	Grid of 6BE6 Rear Section of Gang	455 Kc/s	Gang fully closed	Top and bottom Cores in T3 and T2
	Repeat adjustments until maximum output is obtained. Then, using dummy aerial:			
2	Aerial lead	600 Kc/s	600 Kc/s	L.F. Osc. Core Adj. (L2)*
3	Aerial lead	1650 Kc/s	Gang fully open	H.F. Osc. Adj. (C9)
4	Aerial lead	1500 Kc/s	1500 Kc/s	H.F. Aer. Adj. (C7)
	Repeat adjustments 2, 3 and 4.			

* Rock the tuning control back and forth through the signal

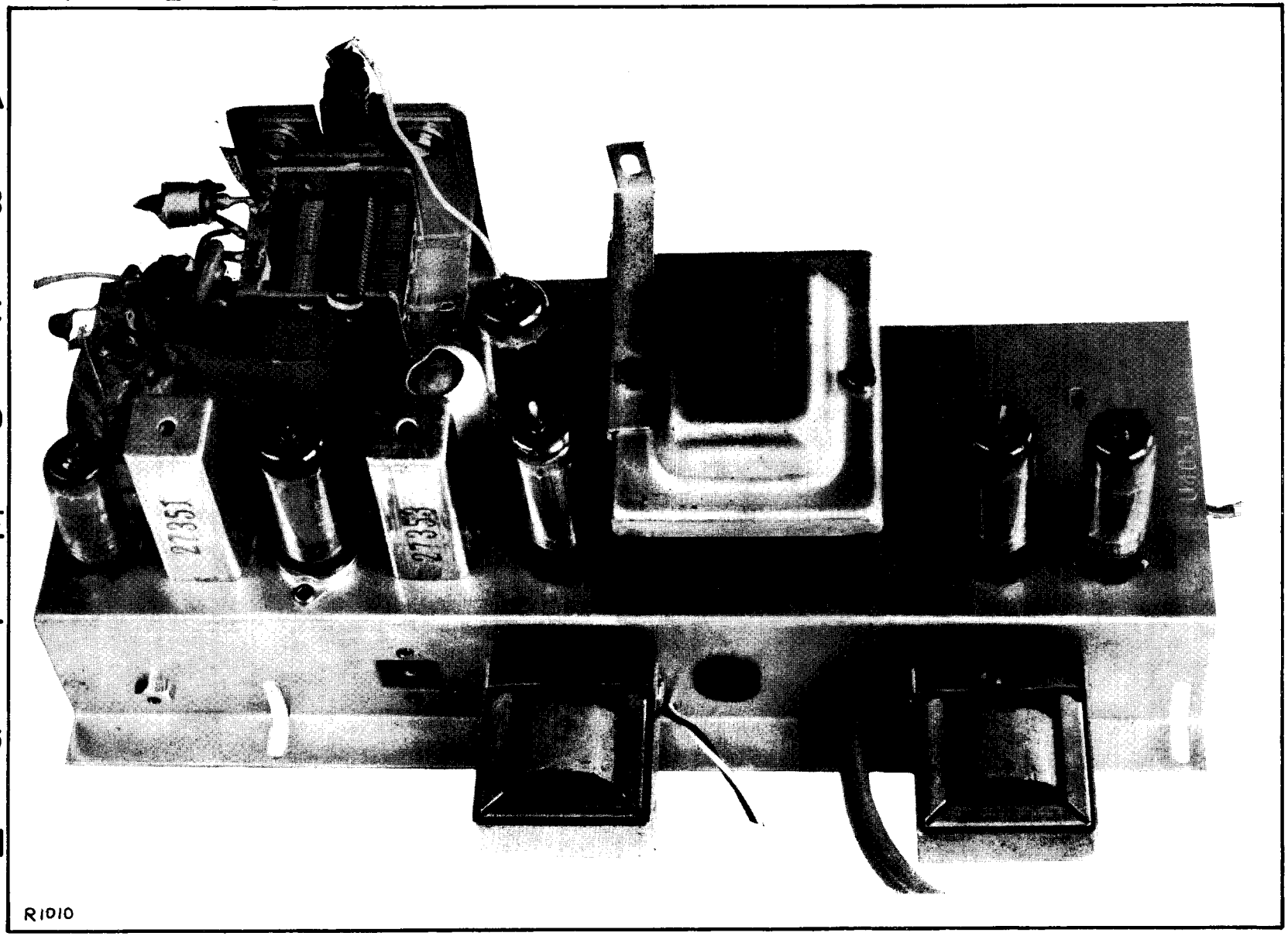
27351
27353
R1010

D.C. RESISTANCE OF WINDINGS

WINDING	RESISTANCE IN OHMS
I.F. Filter L1	23
Oscillator Coil L2	3.7
Aerial Transformer T1:	
Primary	13.5
Secondary	1.9
I.F.Transformer Windings T2 and T3	18

WINDING	RESISTANCE IN OHMS
Output Transformers T4 and T5:	
Primary	380
Secondary	2
Power Transformer T6:	
Primary	52
H.T. Secondary	350
L.T. Secondary	*

* Less than 1 ohm.

The above readings were taken on a standard chassis, but substitution of materials during manufacture may cause variations and it should not be assumed that a component is faulty if a slightly different reading is obtained.

SOCKET VOLTAGES

VALVES	CATHODE TO CHASSIS VOLTS	SCREEN GRID TO CHASSIS VOLTS	ANODE TO CHASSIS VOLTS	ANODE CURRENT mA	HEATER VOLTS
6BE6 Converter	0	90	190	2	6.3
6N8 I.F. Amp. Det. A.V.C.	0	90	190	6	6.3
12AX7 A.F. Amp.	0	—	85	1.0	6.3
6AQ5 Output	0	190	220	20	6.3
6AQ5 Output	0	190	220	20	6.3
6X4 Rectifier	230	—	235 A.C. R.M.S.		6.3

Back bias across R25 = —1.5 volts.
Back bias across R25 + R26 = —10 volts.
Total H.T. Current = 60 mA.

Measured with 240 volts A.C. supply (with P.U.—Radio Switch in Radio position). No signal input; Volume Control maximum clockwise; voltmeter 20,000 ohms/volt; measurements taken on highest scale giving accurate readable deflection.

MECHANICAL REPLACEMENT PARTS

ITEM	PART No.
Chassis Assembly:	
Bracket, Transformer support	60605
Clamp Body, Power Cable	41397
Clamp Lock, Power Cable	41398
Clip, I.F. Mounting	27780
Cover, Transformer	20150
Dial Scale	37942
Lamp Holder	4194
Pointer Assembly	60634
Screw, Coil Mounting	31373

ITEM	PART No.
Cabinet Fitting:	
Bracket, Cable Storage	60623
Cabinet	60205
Clamp, Power Cable	1221
Clamp, Power Cable Moulded	39522
Clamp, Speaker Cable	32818
Cover, Speaker	39389
Knob Assembly, Balance, Tone & Volume	60103
Knob Assembly, Phono—Radio	60639
Knob Assembly, Tuning	60614
Label, Valve Layout	60313
Screw, Tuning Knob	60626

When ordering, always quote the above Part Numbers and in the case of coloured parts such as cabinets, knobs, etc., the colour plus the Part Numbers.

FIG. 1

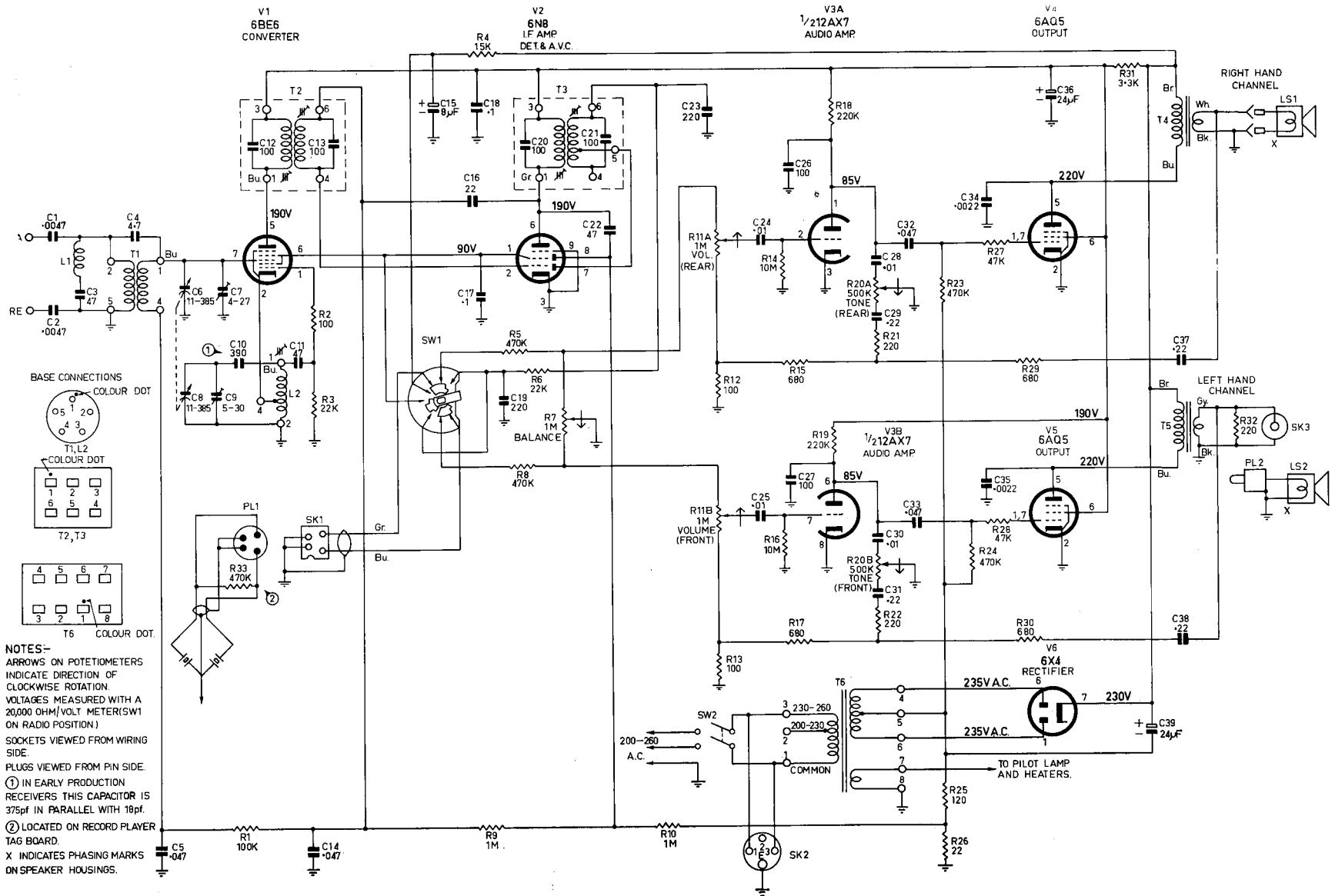

NOTES:-

ARROWS ON POTETIOMETERS INDICATE DIRECTION OF CLOCKWISE ROTATION.

VOLTAGES MEASURED WITH A 20,000 OHM/VOLT METER (SW1 ON RADIO POSITION)

SOCKETS VIEWED FROM WIRING SIDE.

PLUGS VIEWED FROM PIN SIDE.

(1) IN EARLY PRODUCTION RECEIVERS THIS CAPACITOR IS 375pf IN PARALLEL WITH 18pf.

(2) LOCATED ON RECORD PLAYER TAG BOARD.

X INDICATES PHASING MARKS ON SPEAKER HOUSINGS.

Note: On early production receivers the tone control (R21A and R21B) was 100K ohms.

CIRCUIT CODE — RADIOLA B13

CODE No.	DESCRIPTION		PART No.	Fig. No.	Location
	RESISTORS				
	All Resistors ± 10% Carbon unless otherwise stated.				
R1	100K ohms	½ watt	616017	1	E3
R2	100 ohms	½ watt W.W.	602061	1	D1
R3	22K ohms	½ watt	613653	1	E2
R4	15K ohms	2 watts	612900	1	D11
R5	470K ohms	½ watt	617356	1	F2
R6	22K ohms	½ watt	613653	1	D4
R7	1 Megohm Linear Carbon, Balance		60404	1	G3
R8	470K ohms	½ watt	617356	1	F2
R9	1 Megohm	½ watt	618016	1	D4
R10	1 Megohm	½ watt	618016	1	D4
R11A	1 Megohm Log. Carbon } Volume		60405	1	G5
R11B	1 Megohm Log. Carbon } Volume			1	F5
R12	100 ohms	½ watt W.W.	602061	1	F3
R13	100 ohms	½ watt W.W.	602061	1	G4
R14	10 Megohms	½ watt	619406	1	F5
R15	680 ohms	½ watt	607281	1	F4
R16	10 Megohms	½ watt	619406	1	E6
R17	680 ohms	½ watt	607281	1	F4
R18	220K ohms	1 watt	616726	1	E6
R19	220K ohms	1 watt	616726	1	E6
R20A	500K ohms Log. Carbon } Tone		60406	1	G6
R20B	500K ohms Log. Carbon } Tone			1	F6
R21	220 ohms	½ watt	605253	1	E10
R22	220 ohms	½ watt	605253	1	E9
R23	220 ohms	½ watt	617356	1	D6
R24	470K ohms	½ watt	617356	1	D9
R25	120 ohms	1 watt	604366	1	D9
R26	22 ohms	½ watt W.W.	602318	1	D9
R27	47K ohms	½ watt	614961	1	D6
R28	47K ohms	½ watt	614961	1	D9
R29	680 ohms	½ watt	607281	1	F10
R30	680 ohms	½ watt	607281	1	F9
R31	3.3K ohms	2 watts	610310	1	D10
R32	220 ohms	½ watt	600667	On Cabinet	
R33	470K ohms	½ watt	617356	On Changer	
	CAPACITORS				
C1	0.0047uf ±20% K2000 250V A.C.		225987	On Cabinet	
C2	0.0047uf ±20% K2000 250V A.C.		225987	On Cabinet	
C3	47pf ±5% N750 tubular		220554	2	C2
C4	4.7pf ±10% N750 disc		220215	2	C1
C5	0.047uf ±20% 200VW paper		226834	1	E3
C6	11—385pf tuning Aerial		60624	2	C4
C7	4—27pf trimmer Aerial		33304	2	C2
C8	11—385pf tuning Oscillator		60624	2	B4
C9	5—30pf trimmer Oscillator		231136	2	B2
C10	390pf ±2½% silvered mica		223884	1	E2
C11	47pf ±10% 500VW silvered mica		226809	1	E1
C12	100pf ±5% silvered mica (in 1st I.F.)		226616	In T2	
C13	100pf ±5% silvered mica (in 1st I.F.)		226616	In T2	
C14	0.047uf ±20% 200VW paper		226834	1	D3
C15	8uf 525 VP Electrolytic		222529	1	E10
C16	22pf ± 10% N750 tubular		220882	1	D5
C17	0.1uf ±20% 400VW paper		227017	1	E2
C18	0.1uf ±20% 400VW paper		227017	1	E4
C19	220pf ±10% 500VW silvered mica		226818	1	D5
C20	100pf ±5% silvered mica		226616	In T3	
C21	100pf ±5% silvered mica		226616	In T3	
C22	47pf ±10% N750 tubular		221434	1	D4
C23	220pf ±10% 500VW silvered mica		226818	1	D4
C24	0.01uf ±20% 400VW paper		226311	1	F4
C25	0.01uf ±20% 400 VW paper		226311	1	F6
C26	100pf ±10% N750 tubular		222224	1	F5
C27	100pf ±10% N750 tubular		222224	1	F7
C28	0.01uf ±20% 400VW paper		226311	1	F7
C29	0.22uf ± 20% 200VW paper		227330	1	F9
C30	0.01uf ±20% 400VW paper		226311	1	F6
C31	0.22uf ±20% 200VW paper		227330	1	F8
C32	0.047uf ±20% 400VW paper		226829	1	E6
C33	0.047uf ±20% 400VW paper		226829	1	E7
C34	0.0022uf ±20% 600VW paper		225624	1	D6
C35	0.0022uf ±20% 600 VW paper		225624	1	D10
C36	24uf 300VW Electrolytic		222812	1	D5
C37	0.22uf ±20% 200VW paper		227330	1	F11
C38	0.22uf ±20% 200VW paper		227330	1	E9
C39	24uf 300VW Electrolytic		222810	1	C9
	TRANSFORMERS				
T1	Aerial Transformers		50696	2	D2
T2	1st I.F. Transformer		27351	1	D3
T3	2nd I.F. Transformer		27353	1	D5
T4	Output Transformer		21204G	1	B6
T5	Output Transformer		21204G	1	B10
T6	Power Transformer		25807	1	D8
	INDUCTORS				
L1	I.F. Filter Choke (incl. C3)		50604	2	C2
L2	Oscillator Coil		32406	1	D2
	VALVES				
V1	Radiotron 6BE6			1	D1
V2	Radiotron 6N8				
V3	Radiotron 12AX7			1	E5
V4	Radiotron 6AQ5			1	D6
V5	Radiotron 6AQ5			1	D10
V6	Radiotron 6X4			1	D11
	MISCELLANEOUS				
SW1	Phono-Radio Switch		60630	1	G2
SW2	On-Off Switch (on R20)			1	F6
LS1	5" Permanent Magnet Speaker		21643		
LS2	5" Permanent Magnet Speaker		21547		
SK1	PU Socket		40180	2	F4
SK2	Phono Motor Power Socket		28313	2	F7
SK3	Co-axial Output Socket		793247		
PL1	PU Plug		49739		
PL2	Co-axial Output Plug		581549		