CONNECTION INSTRUCTION IN ALIGNMENT (Fig. 14)

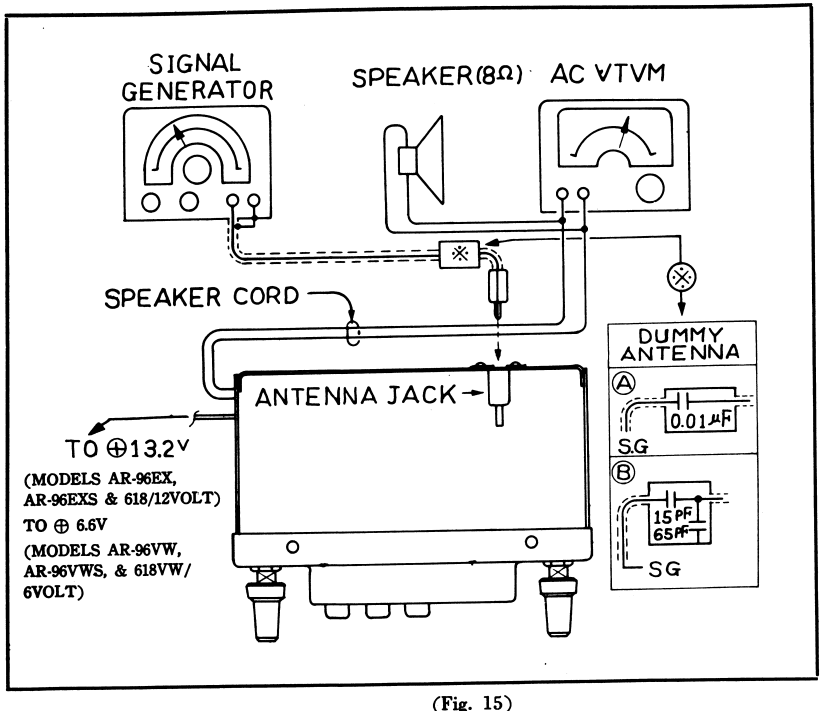

(Fig. 15)

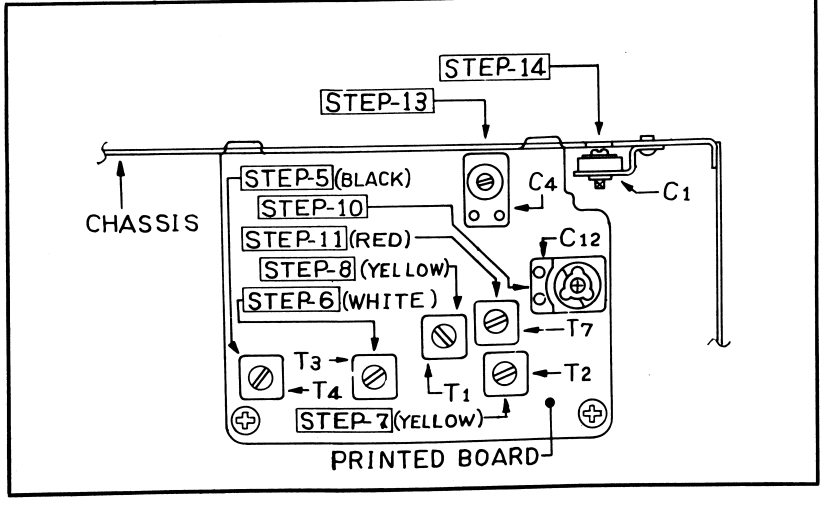

ALIGNMENT PROCEDURE DETAILS

STEP					
1.	Connect an AC VTVM across 8 ohm speaker as a substitute for speaker or 8 ohm dummy load to speaker cord of the radio. Maintain 3 volts (full scale) on AC VTVM. Refer to Fig. 14				
2.	Set volume to maximum and tone to treble. Depress tone control button marked "H-ON" Supply voltage ⊕ 13.2 volts after confirmation of negative grounding of the radio's polarity. Refer to Fig. 14 (⊕ 6.6V for VW)				
3.	Connect signal generator ground terminal and tuner chassis. Connect signal generator output terminal and antenna jack through 0.01μF Capacitor. For alignment of STEPS 10 to 14, connect dummy antenna series 15pF, parallel 65pF in place of 0.01μF Capacitor. Refer to Fig. 14				
	While proceeding with alignment, attenuate signal generator output to maintain 1 to 2 volts on AC VTVM at all times to prevent overloading. Alignment points necessary for STEPS 5 to 14 are as per Fig. 15				
	GENERATOR CONNECTION	GENERATOR FREQUENCY (400 cycle 30% mod.)	TUNER SET TO	ADJUST	REMARKS
4.	Antenna Jack thru 0.01μF Capacitor	455Kc/s	1000Kc/s approx.		Attenuate signal generator output to maintain 1 to 2 volts on AC VTVM.
5 to 8	—〃—	—〃—	—〃—	T4 T3 T2 T1 Refer to Fig.15 &	Adjust IFT core for maximum output.
9.	—〃—	—〃—	—〃—	—〃—	Repeat STEPS 5 to 8 until no further increase.
10.	Antenna Jack thru Dummy Antenna Series 15pF Parallel 65pF Refer to Fig.	1630Kc/s	Hi end stop	C12 Refer to Fig.15	Adjust for maximum output.
11.	—〃—	530Kc/s	Lo end stop	T7 Refer to Fig.15	—〃—
12.	—〃—	1630Kc/s 530Kc/s	Hi end stop Lo end stop	C12 T7	Repeat STEPS 10 & 11.
13.	—〃—	1400Kc/s	Tune in S.G. frequency (1400Kc/s)	C4 Refer to Fig.15	Adjust for maximum output.
14.	—〃—	—〃—	—〃—	C1 Refer to Fig.15	Adjust for maximum output or noise.
	Just tune in a weak station around 1400Kc with radio and antenna installed in car. If any suitable station is not tuned in, radio's background noise may be employed just as well.				

GENERAL FEATURES

Models AR-96EX, AR-96EX-S, 618/12volt, AR-96VW, AR-96VW-S and 618VW/6volt are all-transistorized superheterodyne manual tuning auto radios; Models AR-96EX, AR-96EX-S and 618/12 volt operate from 12 volts and negative or positive grounding electrical systems. Containing 6 transistors and 2 diodes, they are designed for universal installation in a variety of automobiles.

Models AR-96VW, AR-96VW-S and 618VW/6 volt operate from 6 volts and negative grounding electrical systems. Containing 6 transistors and 2 diodes, they are designed for the custom installation in VOLKSWAGEN 1200/1300.

Models AR-96EX-S and AR-96VW-S are equipped with power supply terminals for short-wave adaptors.

SPECIFICATIONS

	Models AR-96EX, 96EX-S & 618/12 volt	Models AR-96VW, 96VW-S & 618VW/6 volt
Power Supply:	12 volts, Negative or Positive Grounding	6 volts, Negative Grounding
2. Frequency Range:	535Kc/s to 1605Kc/s	
3. Intermediate Frequency:	455Kc/s	
4. Audio Output:	2W	1W
5. Current Consumption:	0.45A	0.7A
6. Output Matching Impedance:	8 Ω (3.5Ω)	8 Ω
7. Sensitivity:	Less than 26dB	
8. S/N Ratio:	More than 20dB	
9. Selectivity:	More than 18dB (±10Kc/s Detuning)	
10. Electrical Fidelity:	Less than -6dB at 150c/s Less than -16dB at 4000c/s	

11. Transistors & Diodes:

R. F. Amplifier	2SA275	1 pce.
Converter	2SA273	1 pce.
I. F. Amplifier	2SA274	2 pcs.
A. F. Amplifier	2SB120	1 pce.
Power Amplifier	2SB41	1 pce.
Detector	1S446	1 pce.
A. G. C.	1S446	1 pce.

N. B. "TEN" short-wave adaptors can be connected to Models AR-96EX-S and AR-96VW-S.

AUTO RADIO SERVICE MANUAL

AR-96 SERIES

Models AR-96EX, AR-96EX-S, 618/12Volt AR-96VW, AR-96VW-S & 618VW/6Volt

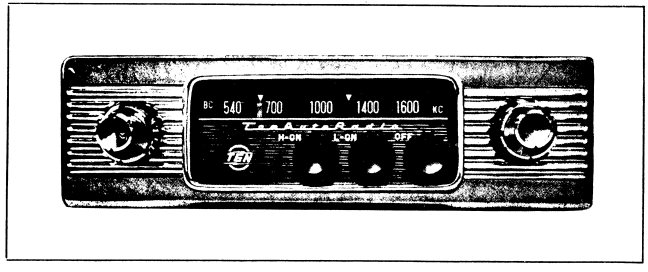

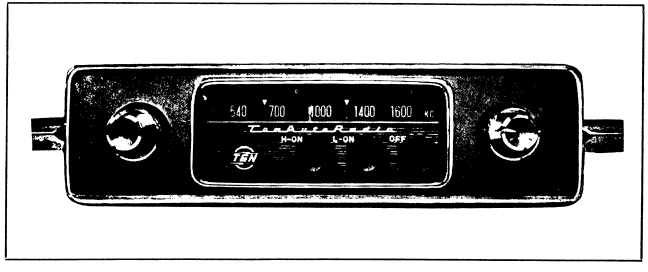

PRINTED BOARD SCHEMATIC (AR-96EX, AR-96EX-S & 618/12Volt)

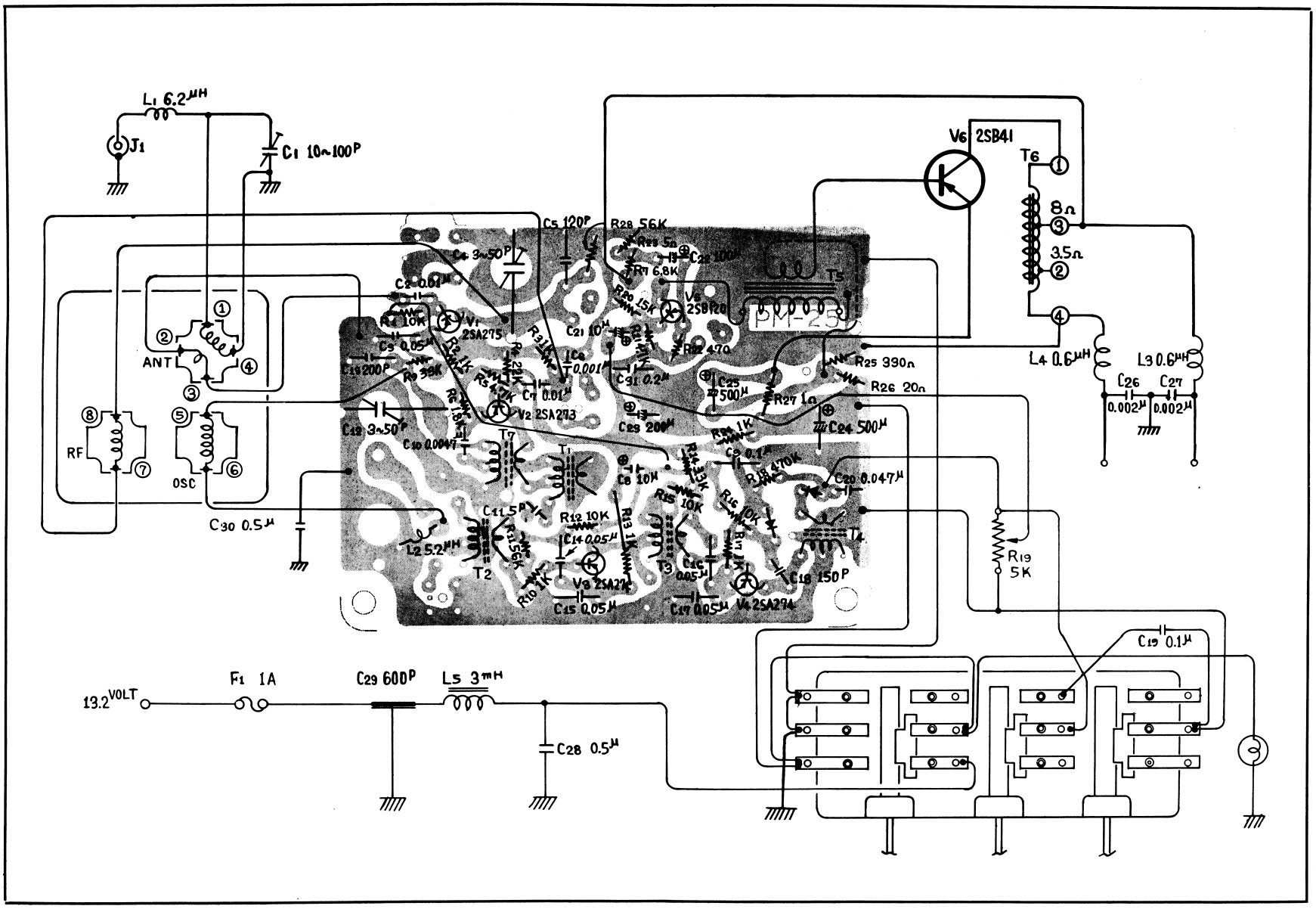

SCHEMATIC DIAGRAM (AR-96VW, AR-96VW-S & 618VW/6Volt)

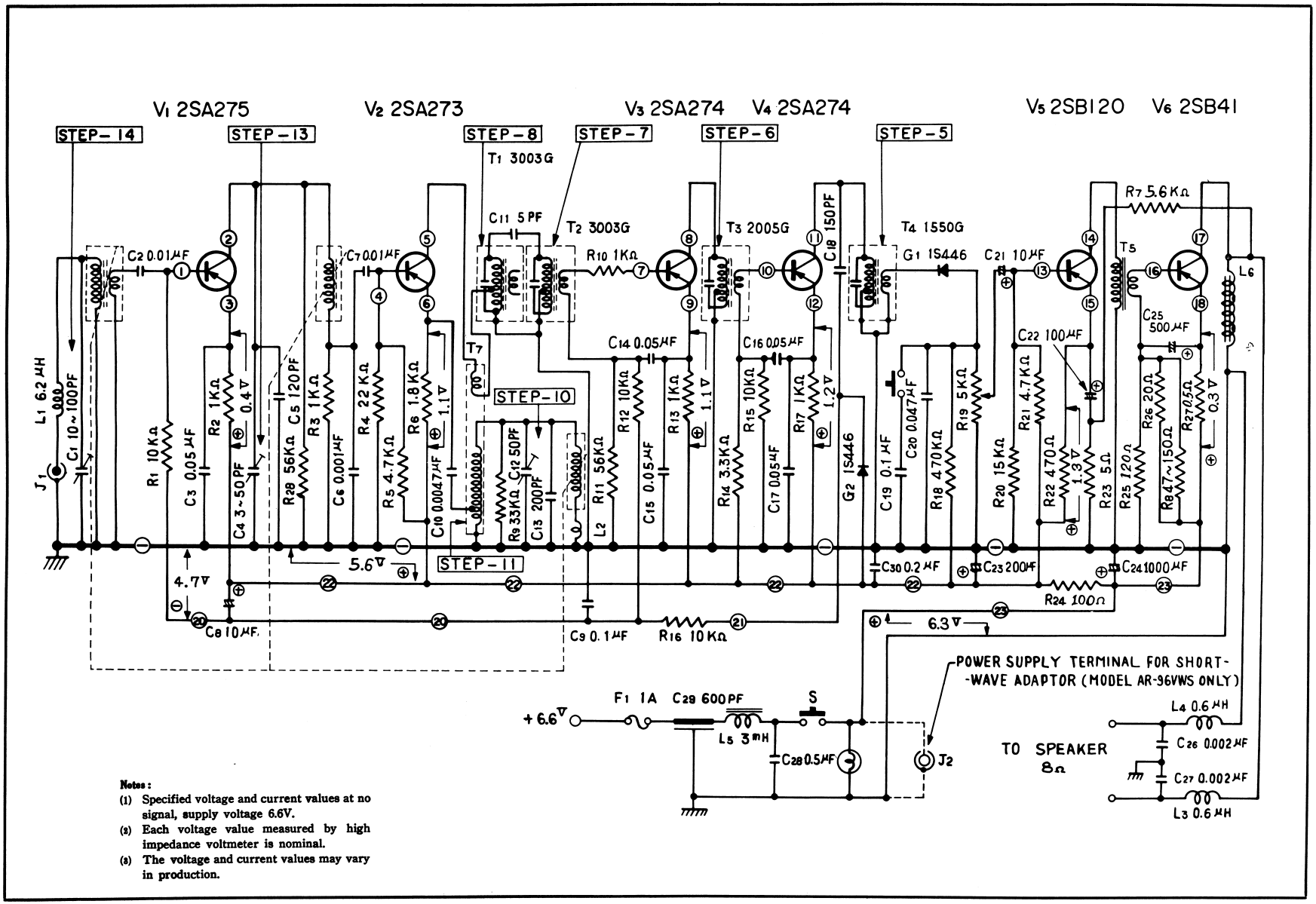

Notes:

(1) Specified voltage and current values at no signal, supply voltage 6.6V.

(2) Each voltage value measured by high impedance voltmeter is nominal.

(3) The voltage and current values may vary in production.

PRINTED BOARD SCHEMATIC (AR-96VW, AR-96VW-S & 618VW/6Volt)

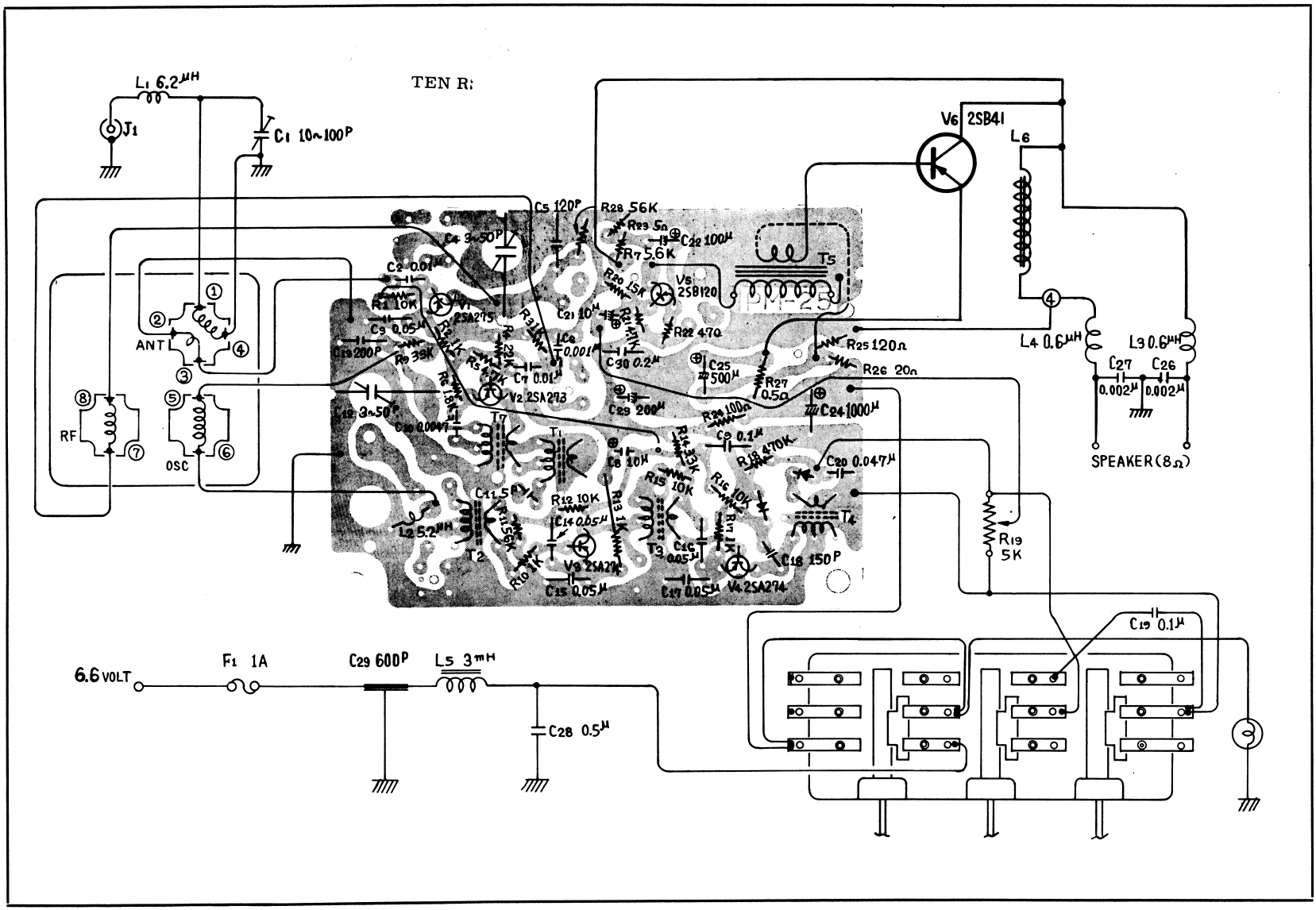

SCHEMATIC DIAGRAM (AR-96EX, AR-96EX-S & 618/12Volt)

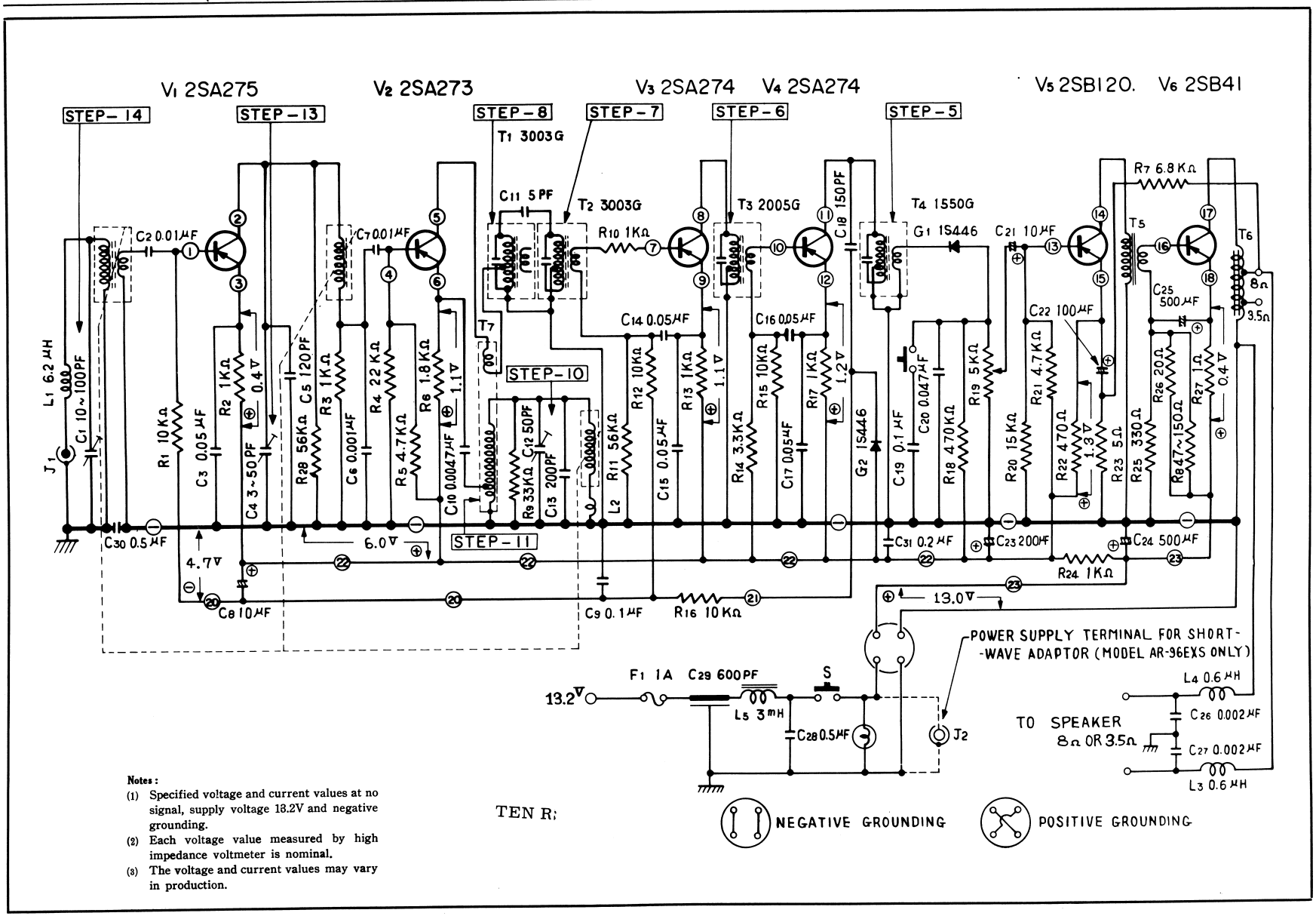

Notes:

(1) Specified voltage and current values at no signal, supply voltage 13.2V and negative grounding.

(2) Each voltage value measured by high impedance voltmeter is nominal.

(3) The voltage and current values may vary in production.

TEN R;