MITSUBISHI

SERVICE MANUAL

AM/FM MPX ELECTRIC TUNING RADIO

MODEL : AR-9567

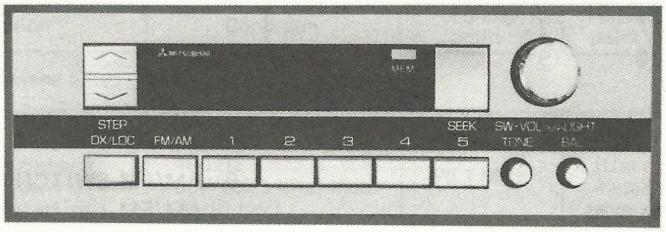

SPECIFICATIONS

AM

• Frequency range	522 ~ 1620 kHz
• IF frequency	450 kHz
• Maximum sensitivity	30 dB (μV)
• S/N ratio	40 dB

FM

• Frequency range	87.9 ~ 107.9 MHz
• IF frequency	10.7 MHz
• Limiting sensitivity	21 dB (μV)
• Stereo separation	20 dB

AUDIO

• Output	4W x 2

FEATURES

- PLL synthesized electric tuning
- AM/FM 5-station-memory
- Noise killer
- Digital readout display

MITSUBISHI ELECTRIC AUSTRALIA PTY. LTD.

73-75 EPPING ROAD NORTH RYDE N.S.W. 2113 SYDNEY AUSTRALIA

ALIGNMENT PROCEDURES

• REQUIRED TEST EQUIPMENTS

SSG: AM FM PLL type
DC voltmeter
AC voltmeter
Oscilloscope
Dummy antenna
Frequency counter and 220 KΩ resistor
DC regulated power supply (with 3.5A current limiter)
4Ω load resistor x 2

• CONNECTION

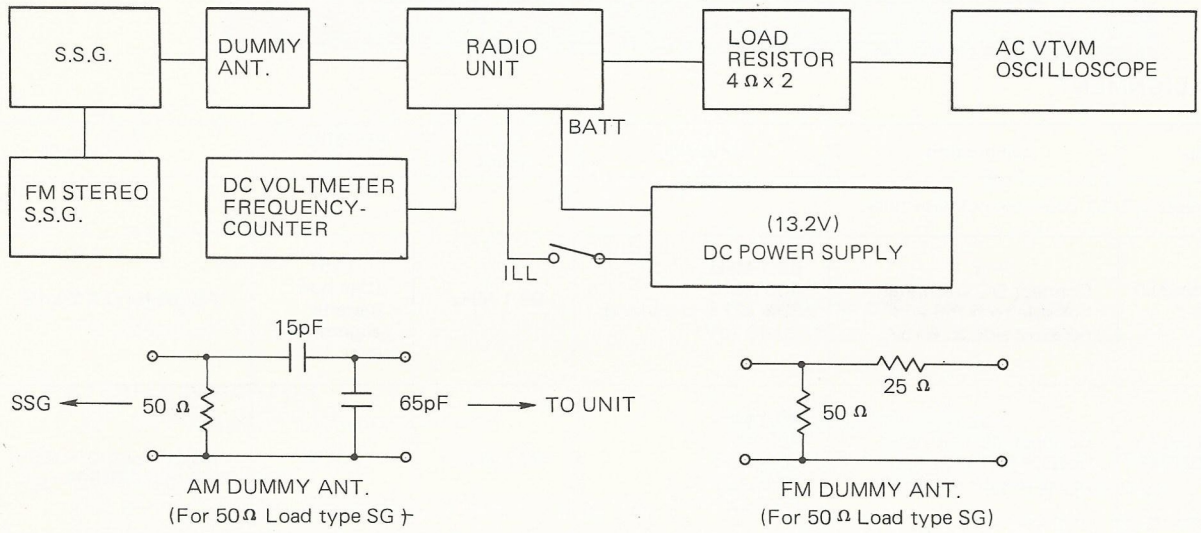

Fig. 1

1. AM ALIGNMENT

Step	Connection	Condition	Tuning point	Adjustment point	Procedures
• Preset VC1, VC2 position and VR1 counterclockwise fully.					
LOCAL OSC. ALIGNMENT 1	Connect short wire between R12 and ground, then connect frequency counter to R11.			L4	Adjust for 685 ± 1 kHz (then disconnect the wire between R12 and ground.)
RF ALIGNMENT 1	Fig. 1	1404 kHz 400 Hz 30% Mod. 20 dB (μV)	1404 kHz	T4, VC1, VC2	Adjust for Maximum output.
2	Fig. 1	576 kHz 400 Hz 30% Mod. 20dB (μV)	576 kHz	T2, T3	Adjust for Maximum output.
3	Repeat step 1 to 2 and finish with step 1.				

PARTS LIST

REF. NO.	PART NO.	DESCRIPTION
RESISTORS & CAPACITORS		
R806	109P04007	R-BLOCK
VR1	127L00203	VR-SEMIFIXED
VR201	127L00204	VR-SEMIFIXED
VR151	127L00208	VR-SEMIFIXED
VR303,403	129L16101	VR-TONE
VR304	129L16201	VR-BAL
VR301,401	129L20201	VR-VOL-PP
CR252	149L00901	CR-MULTIPLE
CR251	149L01001	CR-MULTIPLE
VC1,2	202P10902	C-TRIMMER
SEMICONDUCTORS		
Q803	260P26802	TR 2SA1115E
Q152	260P31303	TR 2SC1214C
Q2,3	260P33802	TR 2SC2603E
Q103,151, 301,302, 401,802	260P33805	TR 2SC2603G
Q801	260P34902	TR 2SC1472B
Q1	260P41201	TR 2SK168E
D303	264P08801	DIODE V-06C
D2	264P11701	DIODE 1S953
D813,6,107	264P19303	DIODE MZ-305B
D5	264P25801	DIODE SVC211SP
D4	264P26201	DIODE KV1225
D1	264P28701	DIODE MI204
IC803	266P06901	IC MPA80C
IC301	266P34001	IC TA7227P
IC151	266P36601	IC LA1140
IC1	266P37601	IC M51191L
IC201	266P38901	IC LA3375
IC802	266P58901	IC UPB553AC
IC801	266P594A2	IC UPD1703C-539
IC251	266P65101	IC LA2110
IC103	266P905A1	IC MPC78L05
IC2,102	266P91503	IC 78K09A
D3,201,202, 7,105,106, 301,801–805,807–812,816, 304,401	269M01201	DIODE 1S953/1S2076/1S2473
TRANSFORMERS & COILS		
L3	321P00504	COIL-CHOKE
L1,101,151	351L03002	COIL-CHOKE
L302	351M00201	COIL-CHOKE
L301	351M01401	TRANS-CHOKE
L2	361M00502	COIL-RF
L4	373L00402	TRANS-OSC
T4	374L03501	TRANS-IF
T151	374L04201	TRANS-IF
T1	409L01002	TRANS-ANT
T2	409L02001	TRANS-RF
T3	409L02002	TRANS-RF

REF. NO.	PART NO.	DESCRIPTION
OTHERS		
CN801	242L47605	LEAD-CONNECTOR-9S
CN802	242L47703	LEAD-CONNECTOR-10P
J301	242L47705	LEAD-CONNECTOR-10P
CN803	242M36601	LEAD-CONNECTOR-2P
PL801,802	253L03404	LAMP
V801	253P03801	TUBE-FLOUR-FIP-6G6
F1	283M00801	FUSE 5A
Z801	283P10501	DC-DC-CONVERTER
X801	285L00303	CRYSTAL
FE101	295P99802	FM-FRONT-END
CF3	296P03501	CERAMIC-FILTER
CF1	296P03701	CERAMIC-FILTER
CF2	296P03801	CERAMIC-FILTER
S810,811	432L06402	SW-PUSH
S801–809	432L06601	SW-TACT
P303	452L05708	CONNECTOR-9P
P1	452M02304	CONNECTOR-9P
P101,301	452M02305	CONNECTOR-10P
P302	452M02402	CONNECTOR-2P
	590K33101	SIDE-BACK
	590K33201	FRONT-PLATE
	591L05801	COVER
	591L22601	BRACKET
	591L22602	BRACKET
J101	591M96202	TERMINAL-N
	592M08601	SHIELD-CASE
	642M19701	INSULATOR
	704L24901	KNOB-TUNE
	704M58901	KNOB-BAL, TONE
	704M59101	BUTTON-A/F
	704M59201	BUTTON-STEP
	704M59301	BUTTON-SEEK
	704M59401	BUTTON-CH
	704M59701	BUTTON-MEM
	704M65301	STOPER-C
	963L32701	ASSY-PANEL

Step	Connection	Condition	Tuning point	Adjustment point	Procedures
STOP SENSITIVITY ALIGNMENT 1	Fig. 1 Connect with short wire between R18 and ground, then connect DC voltmeter to TJ4 and negative chassis ground. (Disconnect lead wire and voltmeter after adjustment.)	DX/LOC: DX ILL: OFF 999 kHz 400 Hz 30% Mod. 30dB (μV)	–	VR1	Adjust for 1.0 to 3.5V.
2		DX/LOC: DX ILL: OFF			Confirm stop sensitivity should be 30 ± 2 dB (μV).
3		DX/LOC: LOC ILL: ON			Confirm stop sensitivity should be 80 ± 6 dB (μV).

2. FM ALIGNMENT

Step	Connection	Condition	Tuning point	Adjustment point	Procedures
● Preset VR151 counterclockwise fully.					
IF ALIGNMENT 1	Fig. 1 Connect DC voltmeter hot side to R156 and negative side to R157.	98.1 MHz 400 Hz 30% (22.5 kHz) Mod. 20 dB (μV)	98.1 MHz	T151 (Use non-metallic alignment stick.)	Adjust for 0 ± 20mV.
STOP-SENSITIVITY ALIGNMENT 1	Fig. 1 Connect DC voltmeter hotside to TJ151 and negative side to chassis.	98.1 MHz 400 Hz 30% Mod. 10dB (μV) DX/LOC: DX	98.1 MHz	VR151	Adjust for 1.0 ~ 3.5V.
2	Fig. 1 Connect DC voltmeter to R207.				Confirm voltage should be less than 0.35V.
3	DX: Confirm stop sensitivity should be 10 ± 2 dB (μV).				
	LOCAL: Confirm stop sensitivity should be 35 ± 6 dB (μV).				

Step	Connection	Condition	Tuning point	Adjustment point	Procedures
MPX ALIGNMENT 1	Fig. 1 Connect frequency counter to R202 through 220 k Ω resistor.	88.1 MHz 70 dB (μV) No Mod.	98.1 MHz	VR201 (Use nonmetallic alignment stick.)	Adjust for 76 ± 0.2 kHz.
2	Fig. 1	98.1 MHz 400 Hz Stereo Mod. 20.25 kHz Main 7.5 kHz Pilot			Confirm stereo separation should be more than 26dB.

OPERATING CONTROL

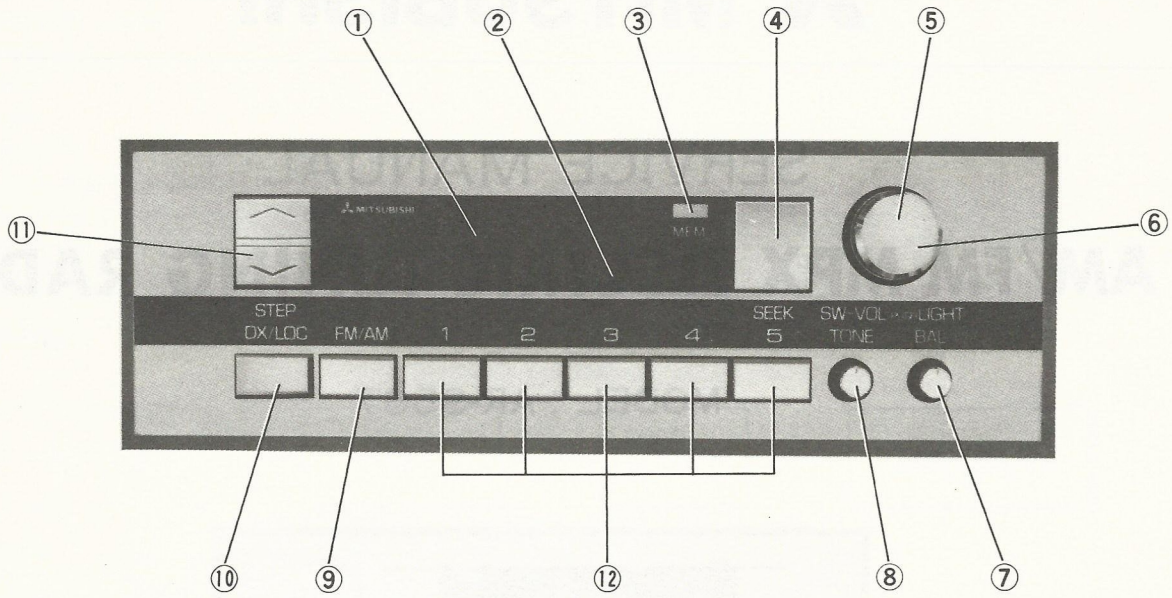

① **FIP DISPLAY**
FIP DISPLAY to soft to eyes.

② **STEREO INDICATOR**
"ST" sign flickers in FM Stereo Mode.

③ **MEMORY BUTTON**
This button lets the memory select buttons held the stations you sought.

④ **SEEK BUTTON**
Auto-tuning system searches the next strongest broad-casting station.

⑤ **NIGHT-ILLUMINATION**
Prism-illumination illuminates the display at night.

⑥ **ON/OFF and VOLUME SWITCH**
Turn CCW and get the sound on the gradual decrease.

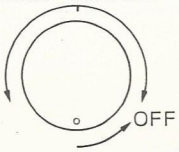

Turn CW and get the sound on the gradual increase.

This button also has a function of ON/OFF.

⑦ **BALANCE SWITCH**
Turn CCW and get the left sound on the gradual increase.

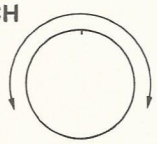

Turn CW and get the right sound on the gradual increase.

⑧ **TONE SWITCH**
Turn CCW and get high-pitched tone on the gradual decrease.

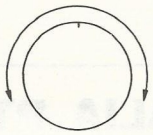

Turn CW and get high-pitched tone on the gradual increase.

⑨ **AM/FM SWITCH BUTTON**
AM/FM can be sequentially turned over by pushing this button.

⑩ **DX/LOC BUTTON**
DX ..... Broadcast received across the distant wide area.
LOC ..... Broadcast received within the local narrow area.

⑪ **MANUAL TUNING BUTTONS**
UP ..... Frequency steps up by 9 kHz in AM and 0.1 MHz in FM by each push.
DOWN ..... Frequency steps down by the equivalent value by each push.

⑫ **MEMORY SELECT BUTTONS**
- 5 stations can be detained in AM and in FM respectively.
- MEMORY PROGRAM
  1. Select either AM or FM mode by AM/FM button.
  2. Seek a station you desire by the manual tuning buttons or seek button.
  3. Push "MEM" button and sign "ME" flickers.
  4. Push one of the 5 memory select buttons within 5 sec. after flickering to be memorized the station you sought.

REMOVAL PROCEDURES

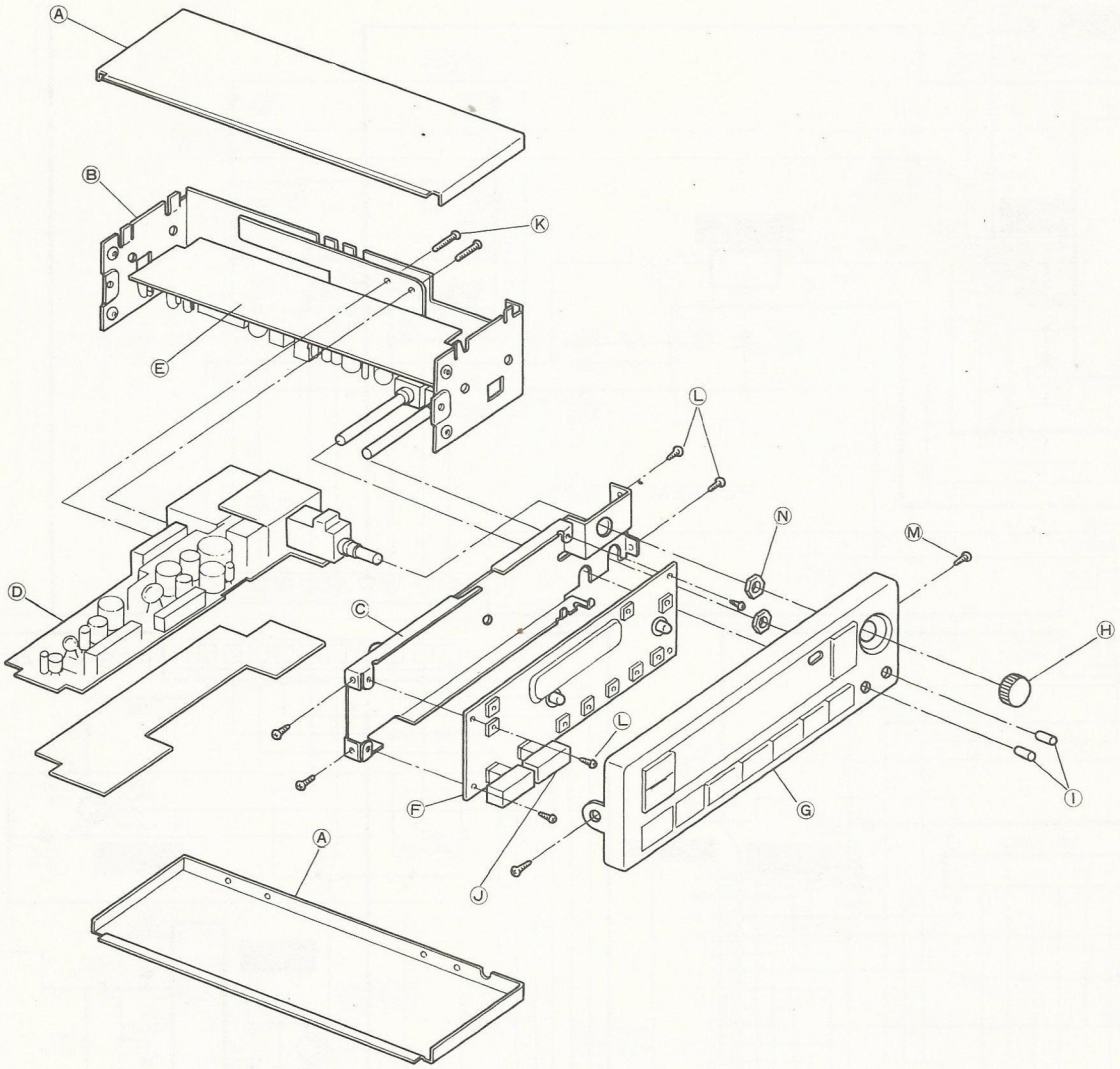

1) Loosen one Volume (H), one Balance (I) and one Tone (I) switch.
2) Take out one Front-panel (G) by loosening 2 screws (M) of left and right.
3) Take out one Bottom-cover (A) and one Upper-cover (A).
4) Loosen 3 screws (L) which fix PCB-control (F).
5) Remove solder on the Black-lead-wire which connects with PCB-FM (E).
6) Detach 3 connectors with 801, 802 and 803.
7) PCB-control can be taken out now.
8) Take out 3 hexagonal nuts (N) at Volume-SW, Balance-SW and Tone-SW.
9) Take out one Front-plate (C) by loosening 2 right side screws (L) and 2 left side screws (L).
10) Take out one Side-back (B) by loosening 2 screws (K) which fix Power IC301.
11) Detach the Black-lead-wire which connects with PCB-FM.
12) Remove solder TJ1.
13) Straighten the upper nail of the left side on Side-back (B).
14) Take out PCB-FM.
15) Unfasten 2 nail of both sides which fix PCB-AM (D).
16) Detach the Back-lead-wire connected with PCB-AM (D).
17) PCB-AM can be taken out now.

Reverse the removal procedure, when you assemble the unit.

SCHEMATIC DIAGRAM

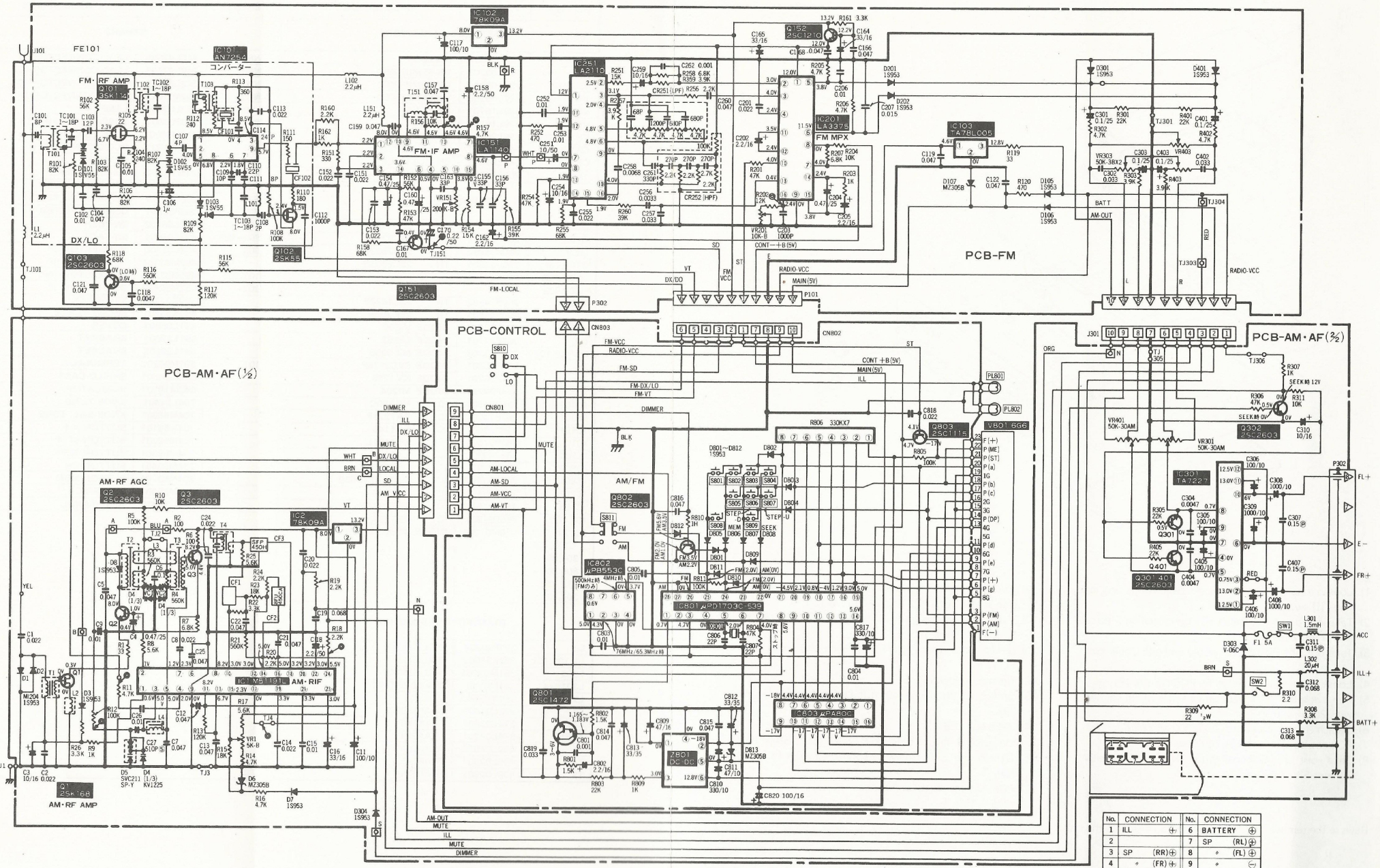

No.	CONNECTION	No.	CONNECTION
1	ILL ⊕	6	BATTERY ⊕
2		7	SP (RL) ⊕
3	SP (RR) ⊕	8	〃 (FL) ⊕
4	〃 (FR) ⊕	9	〃 ⊖
5	ACC ⊕B		

PRINTED CIRCUIT BOARD (Pattern Side)

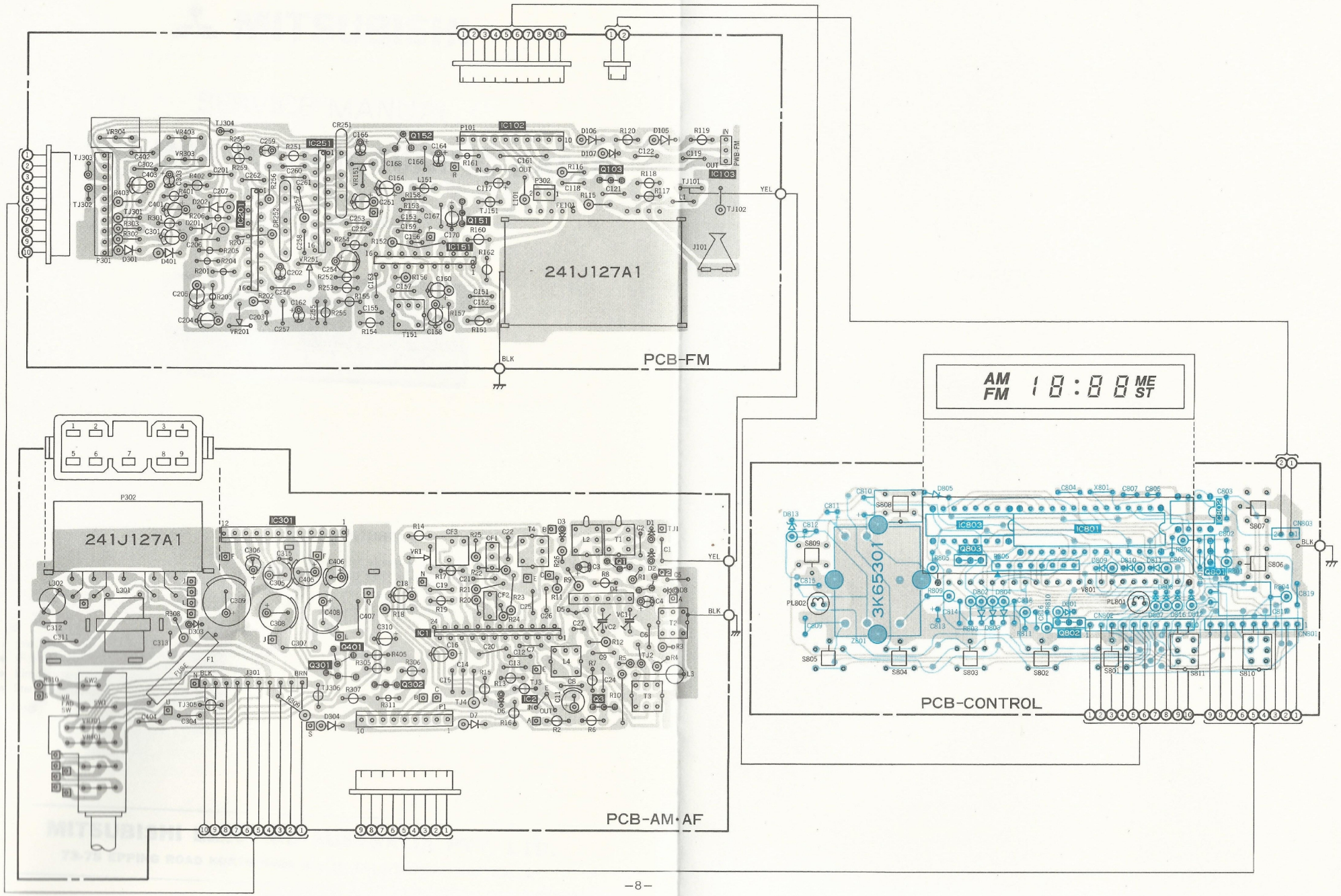

MITSUBISHI® CAR AUDIO

US OUT

SERVICE BULLETIN

Service Bulletin MMC #0007

Re: AN IMPROVEMENT OF FM FRONT-END IN AR-9377 SERIES AND RX-390 MODELS

Please perform the following measures for all units which have complaints of FM-RECEPTION when they are sent in for repair.

OBJECTIVE:

1. Model Numbers: AR-9377, 9377-2, 9377-3, 9377F, 9377F-3, AR-9377FY, 9377FY-3, 9377Y-2, 9377Y-3, AR9567, RX-390Y, 391Y, 395Y, 396Y, RX393-Y

2. Customer's Complaint:
   FM Section: Poor reception, IN-OP, Static Noise, SEEK/SCAN trouble and other complaints relating to FM reception.

3. Affected Units: Those that are numbered with SERIAL No. 57------ and before.

   Example: 5 7 - - - - - -
   - 7 → indicates JULY
   - 5 → indicates 1985

MEASURES:

Replace the FRONT-END-ASSY. with the new type (shown below.) in the indicated units when the customer complains of FM reception problems. Include the units proved to be of NO TROUBLE FOUND also.

REPLACEMENT PARTS:

The part number is 295P99802. The improved FRONT-END is distinguished by a Blue-Spot marking on the surface of the left forward corner. See Fig. 1.

View of Improved FRONT-END

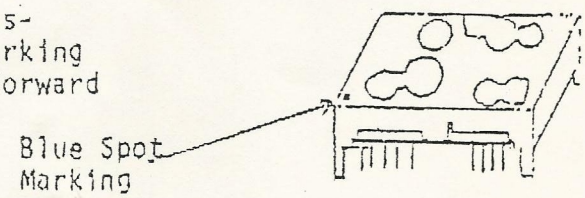

Fig. 1

If the old FRONT-END is still in stock at your location please contact Mitsubishi to exchange it with the improved version.

NOTE: ALL REMOVED DEFECTIVE PARTS SHOULD BE SENT BACK TO MITSUBISHI WITH A COPY OF THE NARDA FORM.

Thank you for your cooperation.

MITSUBISHI ELECTRIC AUSTRALIA PTY. LTD.

73-75 EPPING ROAD NORTH RYDE, N.S.W. 2113 AUSTRALIA
TELEPHONE: 888-5777