Feb.'97-A07 ®

MITSUBISHI

SERVICE MANUAL

AM/FM-ST ELECTRONIC TUNING RADIO with CD PLAYER, CD CHANGER CONTROLLER

Model : ***AR-4525W***

ID No. J042 PART No. MR238809

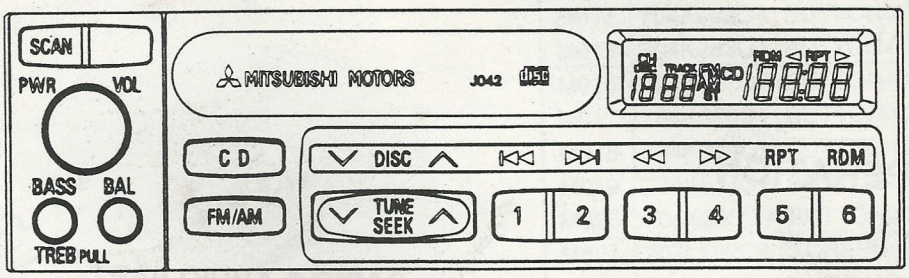

TURES

o

reset tuning keys for AM/FM.
sy memoly by stayring on pushing preset button.
uble function TUNE button with manual and automatic e function.
arching acceptable band and receiving each band for 5 conds by scan function.
to select station by SD-WIDE system.

Amp

luding high power 2CH Amp.
o ludness to change frequency charactaristic for sound el.

s

uding operating of CD auto changer.
uding operating of CD player.
oduced M-bus for correspondence system to CD auto nger and CD player.
oduced convenient LCD to watch positive type.
roved operation by concentrated mode chenged but-

D illumination reduced by vehicle light.

CONTENTS

- FEATURES 1
- SPECIFICATIONS 2
- OPERATION 2,3
- REAR VIEW AND CONNECTORS 3
- ALIGNMENT PROCEDURE 4,5
- AM/FM TUNER SCHEMATIC DIAGRAM 5
- EXPLODED VIEW, UNIT and PARTS LIST 6
- SCHEMATIC DIAGRAM PCB-IF 7
- IC EXPLANATION 7,8,9
- ELECTRICAL PARTS LIST 10,11

- PRINTED CIRCUIT BOARD
- SCHEMATIC DIAGRAM

SPECIFICATIONS

AM Radio

- Frequency Range : 531~1710kHz (Seek and Step: 1kHz)
- Intermediate Frequency : 450 kHz
- Sensitivity (6dB S/N) : Less than 15dB

FM Stereo Radio

- Frequency Range : 87.5 ~ 108.0MHz (Seek: 50kHz, Step: 25kHz)
- Intermediate Frequency : 10.7MHz
- Limiting Sensitivity : Less than 15dB
- Channel Separation : More than 25dB (Input 74dBμV)

Others

- Power Supply : DC 12V (11~16V) Test Voltage 13.2V Negative ground
- Battery Back Up Current : Less than1.0mA
- Current Consumption : ACC 1.7A ± 20%(Output
- Maximum Power Output : 25Wx2 (4Ω Load)
- Output Impedance : 4Ω (SP output)
- Dimensions : 183(W)x169(D)x52(H)m
- Weight : 0.85kg

OPERATION

RADIO & AUDIO PART

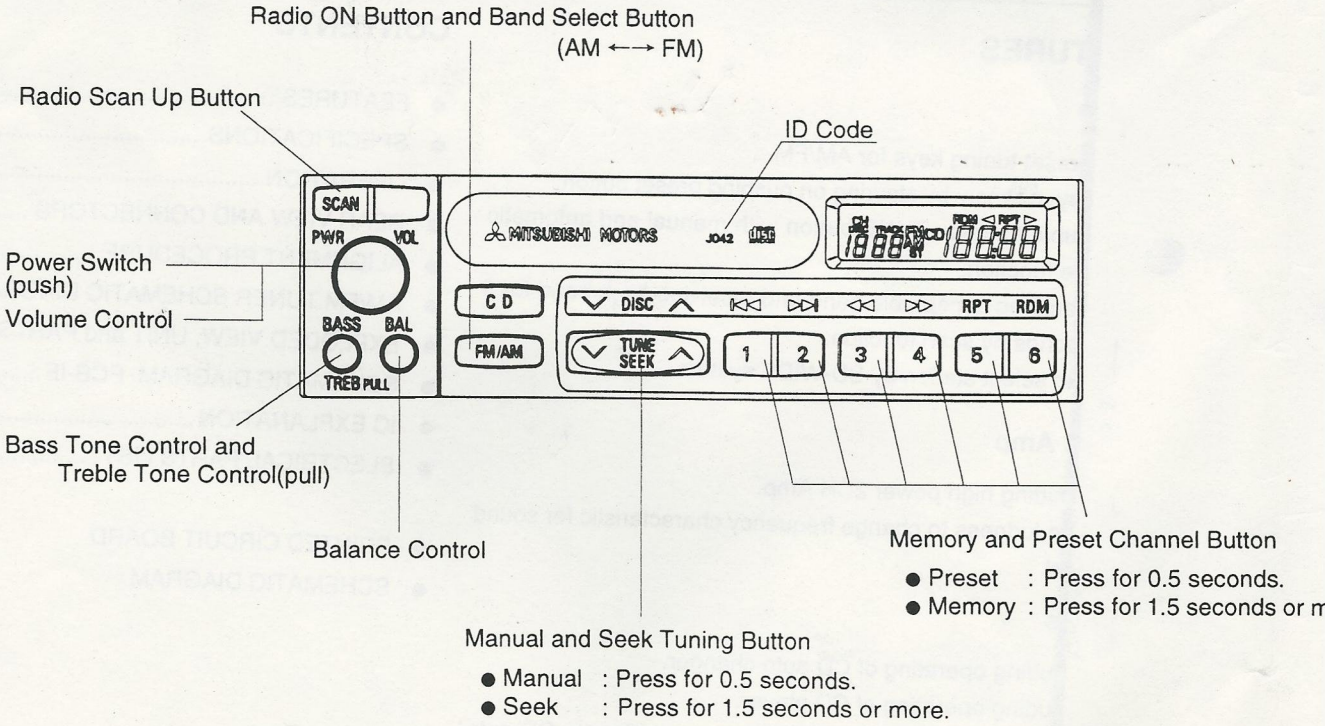

CD CHANGER, CD PLAYER CONTROLLER PART

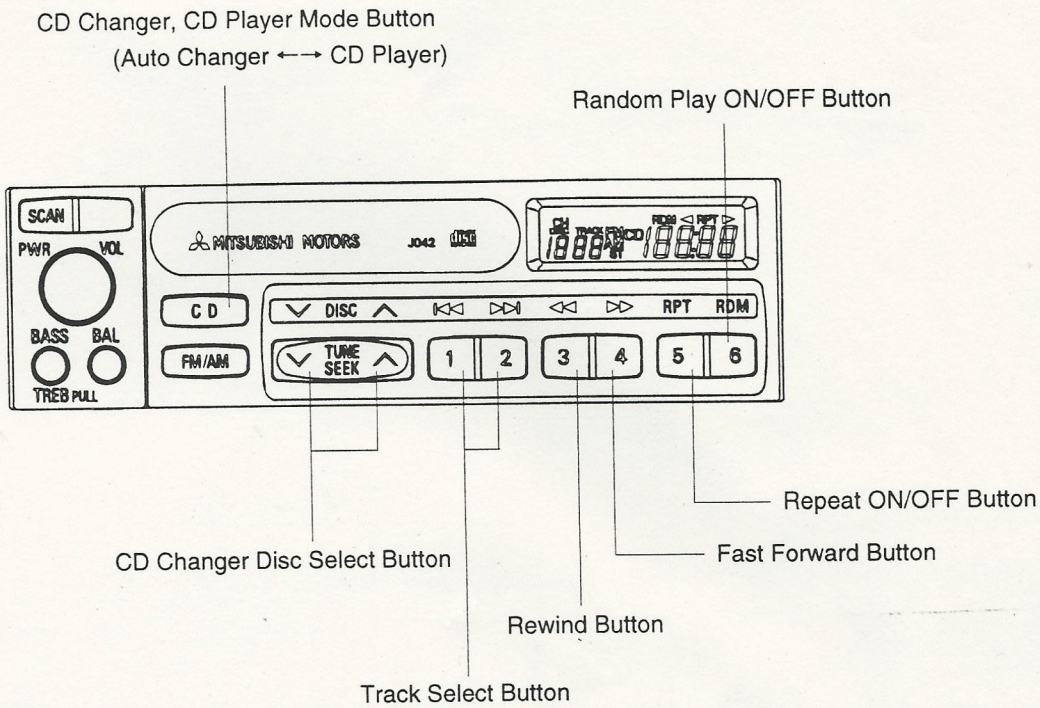

REAR VIEW AND CONNECTORS

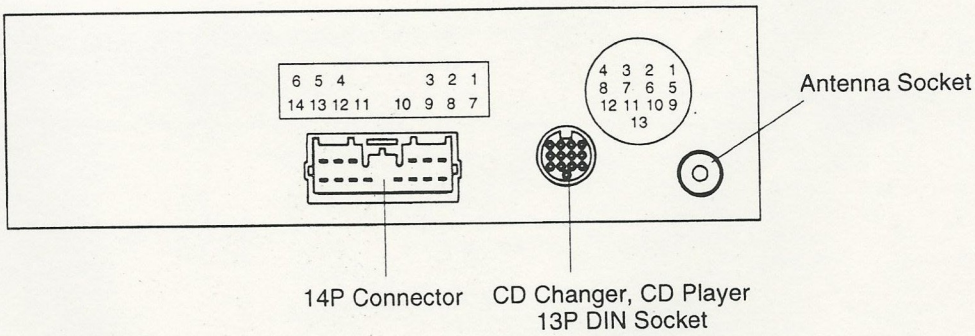

14P Connector

1.	Rch Speaker (+)	8.	Lch Speaker (–)
2.	Lch Speaker (+)	9.	Illumination (–)
3.	Illumination (+)	10.	Battery (+)
4.	Antenna + B	11.	Accessory
5.	—	12.	—
6.	—	13.	—
7.	Rch Speaker (–)	14.	—

CD Changer, CD Player 13P DIN Socket

1.	Signal Ground	8.	—
2.	Lch Signal	9.	Battery (+)
3.	—	10.	Illumination
4.	Rch Signal	11.	M-BUSY
5.	—	12.	M-SCK
6.	—	13.	M-DATA
7.	Accessory (+)		

Adjust	Signal Generator	Tuning Point	Procedure
VR101	98.1MHz 30dB(μV) 400Hz 30% Mod. Mono	98.1MHz	Adjust for 2.5V ~ 2.6V.

5. FM STOP SENSITIVTY ALIGNMENT

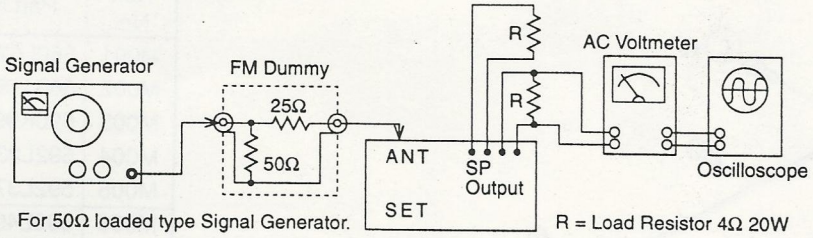

Adjust	Signal Generator	Tuning Point	Procedure
VR992	98.1MHz 23dB(μV) / 21dB(μV) 400Hz 30% Mod. Mono	98.1MHz	Adjust for the condition which SEEK stops at 23dB(μV) and doesn't stop at 21dB(μV).

6. FM SEPARATION and SRC ALIGNMENT

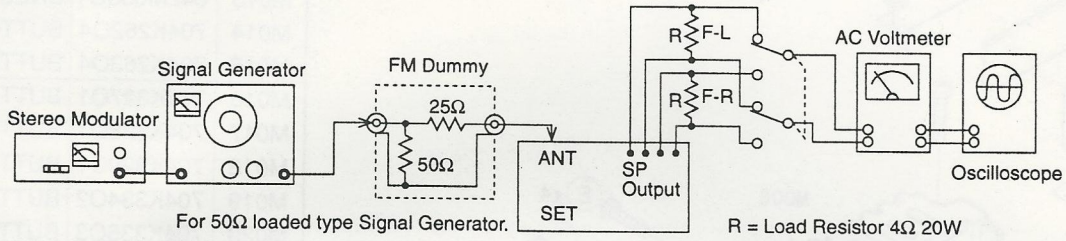

Adjust	Signal Generator	Tuning Point	Procedure
VR103	98.1MHz 68dB(μV) Stereo Mod. (400Hz 27%, 19kHz 9%)	98.1MHz	Adjust for best separetion between Left and Right ch. (Separation should be more than 25dB.)
VR102	98.1MHz 30dB(μV) Stereo Mod.	98.1MHz	Adjust for 4.0~5.0dB separation between Left and Right ch.

7. ADJUSTMENT POINT

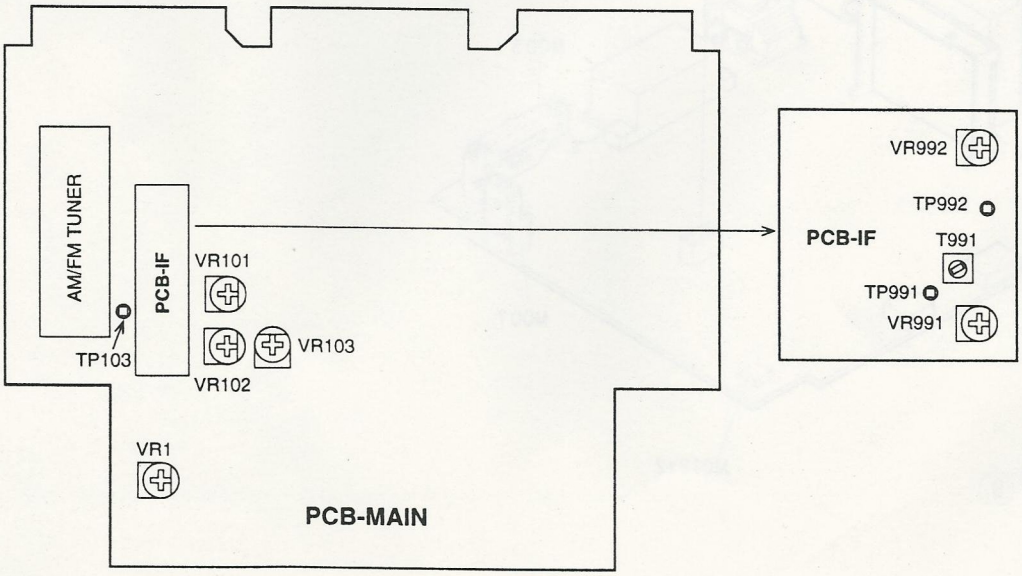

AM/FM TUNER SCHEMATIC DIAGRAM

FE1 AM/FM TUNER

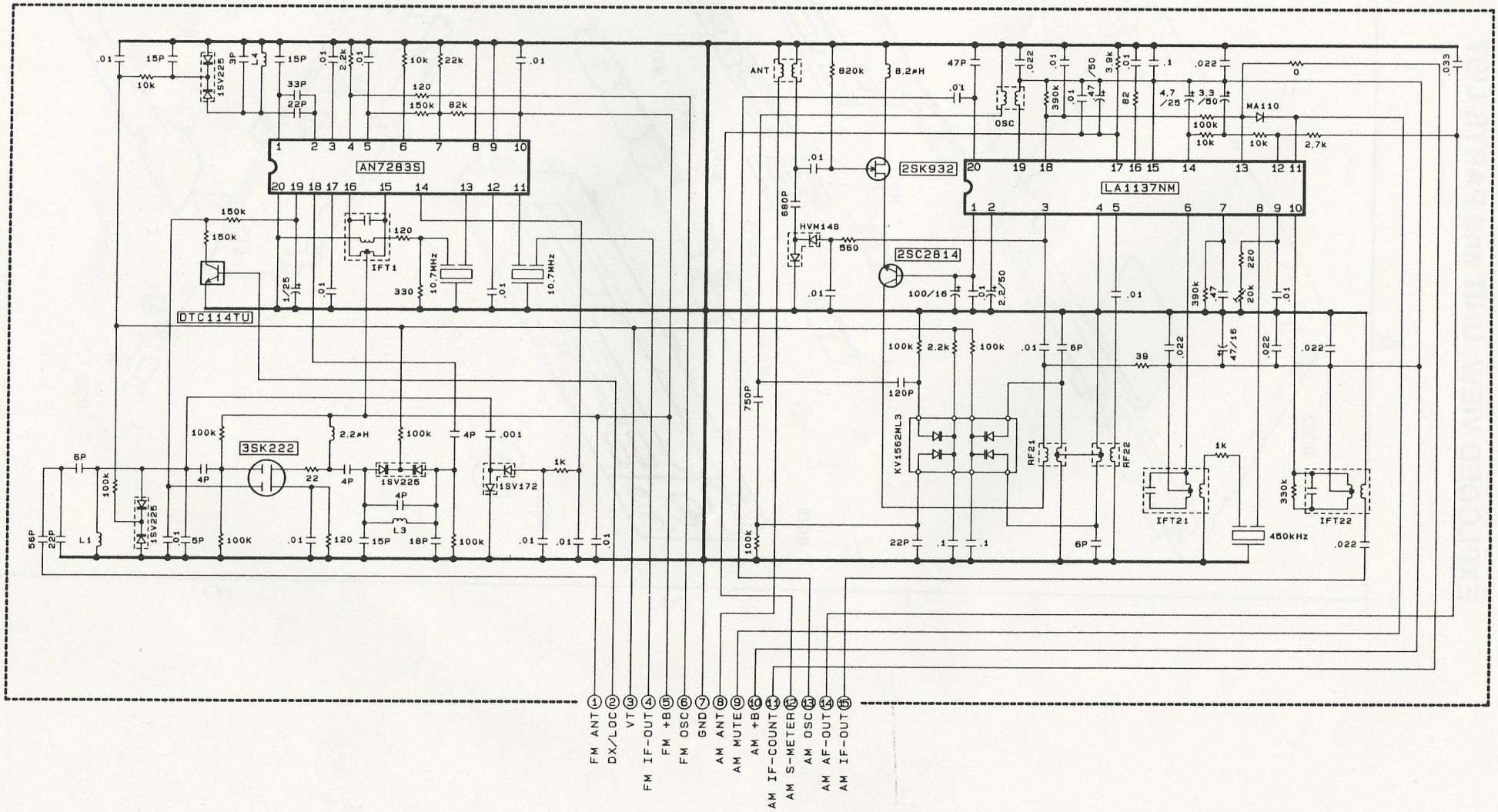

EXPLODED VIEW, UNIT and PARTS LIST

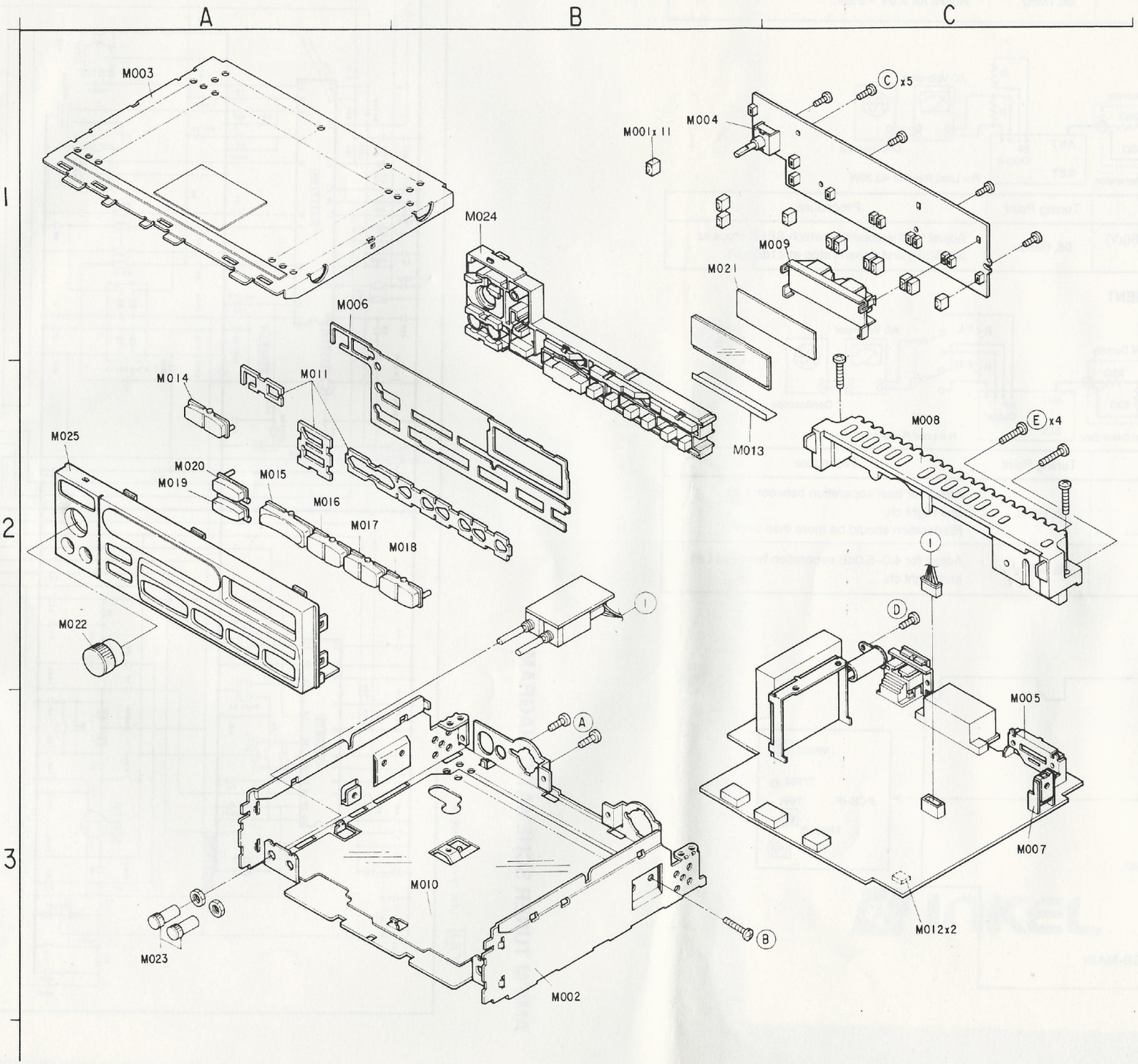

Ref. No.	Part No.	Description	Index
M001	550L020O1	SPACER-SW	B-1
M002	560J150O3	CHASSIS	B-3
M003	590K997O5	COVER	A-1
M004	592L231O2	HOLDER-VR	B-1
M005	592L373O1	HOLDER-IC	C-3
M006	592L494O1	PLATE-E	A-1
M007	592M949O1	HOLDER-TR	C-3
M008	635J037O1	HEAT-SINK	C-2
M009	641K121O1	HOLDER-LCD	C-1
M010	642L474O1	INSULATOR	B-3
M011	642L542O2	CUSHION-B	A-2
M012	642M399O4	FILM-D-B	C-3
M013	642M653O1	SHEET-LCD	B-2
M014	704K262O4	BUTTON-AT-M	A-2
M015	704K263O4	BUTTON-TUNE	A-2
M016	704K327O1	BUTTON-CH1	A-2
M017	704K328O1	BUTTON-CH3	A-2
M018	704K329O1	BUTTON-CH5	B-2
M019	704K334O2	BUTTON-FM	A-2
M020	704K335O3	BUTTON-CD	A-2
M021	707L182O6	SCREEN-LCD	B-1
M022	734L242O4	KNOB-VOL	A-2
M023	734L461O1	KNOB-BT	A-3
M024	891L531O5	ASSY-PRIS	B-1
M025	943M048O2	ASSY-PANEL	A-2
A	650P300P6	SCREW-PAN M3x6	—
B	650P300Q8	SCREW-PAN M3x8	—
C	669L043O1	SCREW-TAP 2x6	—
D	669L046O1	SCREW-TAP 3x6	—
E	669L046O4	SCREW-TAP 3x12	—
F	669L057O1	SCREW-TAP 3x6	—

SCHEMATIC DIAGRAM PCB-IF

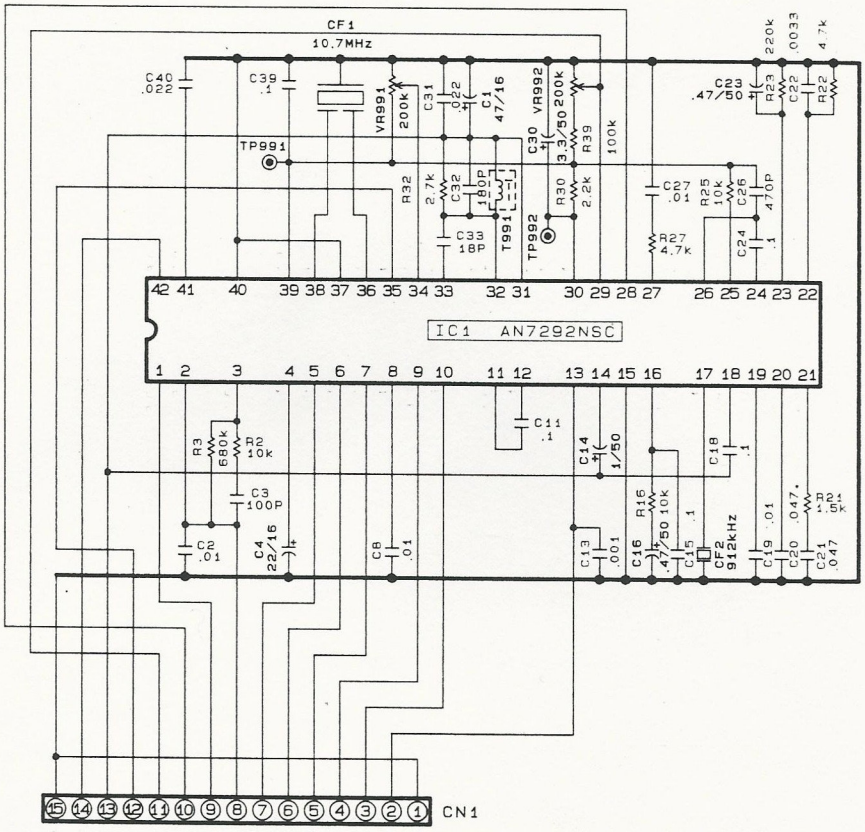

IC EXPLANATION

IC1 AN7292NSC

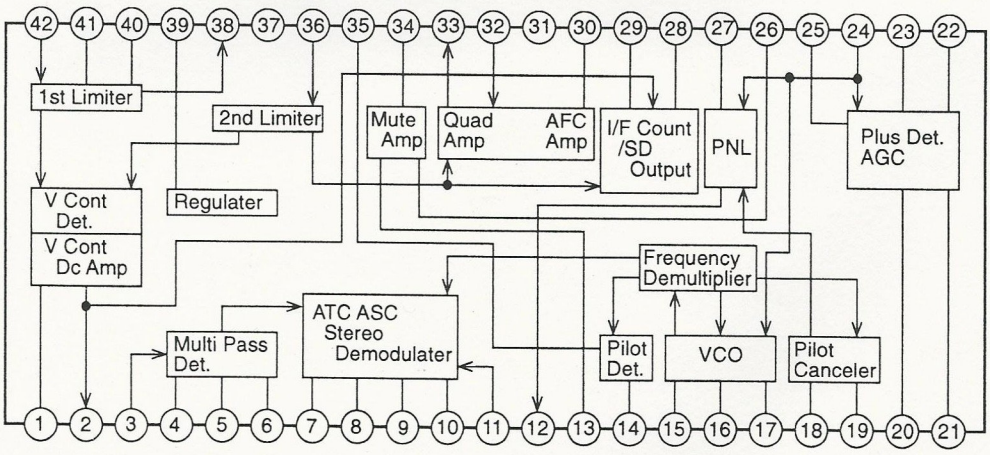

Pin No.	Name	Pin No.	Name	Pin No.	Name	Pin No.	Name
1	Voltage regulation control	13	PNL output	23	PNL-A.G.C	32	IF Regulation coil
2	Voltage output control	14	Phase detection filter1	24	PNL input	33	Limiter output
3	Voltage input control	15	Compulsion mono	25	PNL-H.P.F	34	Soft mute detection
4	Voltage detection control	16	Phase detection filter2	26	IF detection output	35	ST Lamp drive
5	ASC Regulation	17	VCO	27	PNL output maintenance	36	2nd limiter output
6	ATC Regulation	18	Phase detection filter3	28	IF counter output	37	GND
7	Separation regulation	19	Pilot cancel negation		,SD output	38	1st limiter output
8	ATC L.P.F		wave filter	29	SD Sensitivity	39	Reference voltage
9	Rch output	20	PNL-L.P.F		regulation ,SSC	40	1st limiter GND
10	Lch output	21	PNL-L.P.F	30	AFC output	41	1st limiter by-bass
11	MPX input	22	PNL-Gate pulse filter	31	Vcc	42	IF input
12	Soft mute filter						

IC301 TA8184P

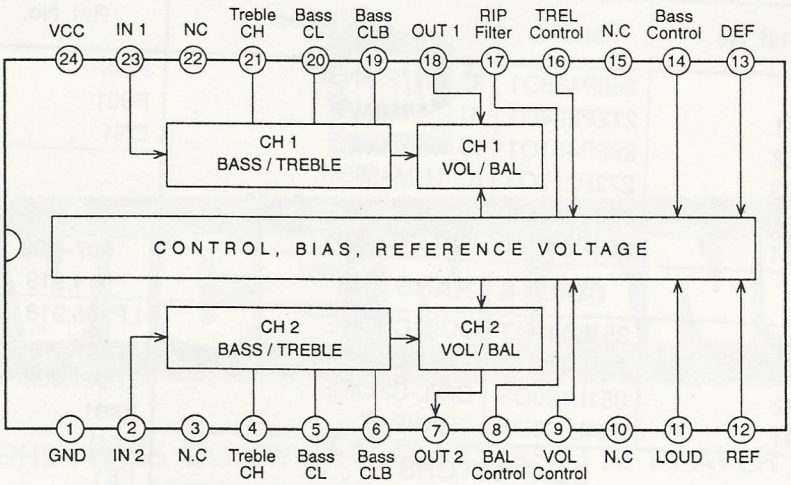

IC302 LA4708F

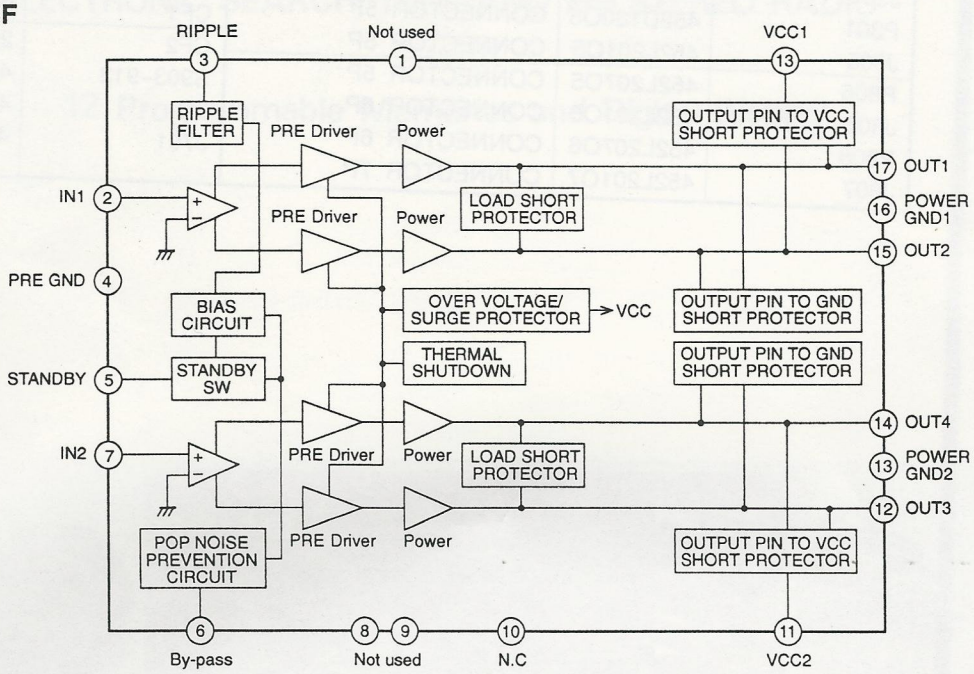

IC303 NJM4565M

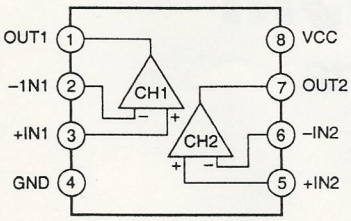

IC901 LC75823W

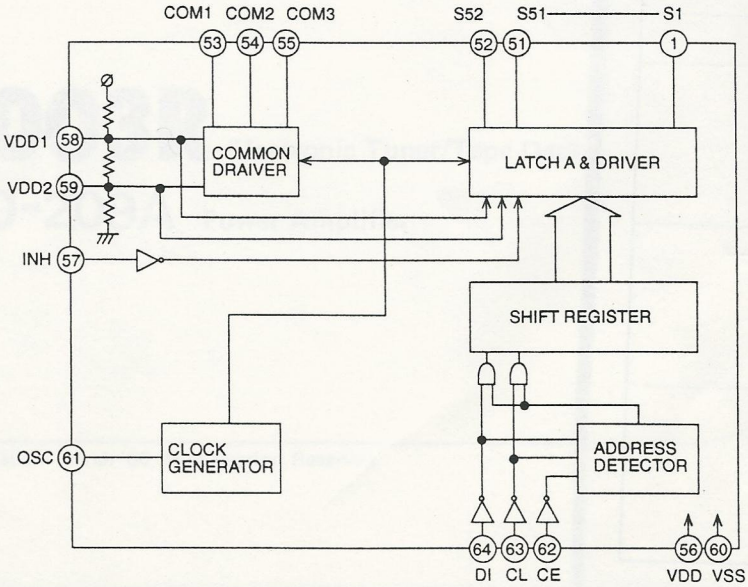

IC801 μPD17010GF-630

Pin No.	Name	Function (Active)	Pin No.	Name	Function (Active)
1	SDW	Wide SD input	31	VCOL	AM PLL local OSC input
2	G-M	(Set high)	32	VCOH	FM PLL local OSC input
3	M-DATA	M bus serial data input/output	33	GND	GND terminal
4	M-CLK	M bus serial clock input/output	34,35	X OUT, X IN	Crystal oscillator terminal
5	M-DATA IN	M bus serial data line	36,37	EO0,EO1	Error out output
6	M-BUSY	M bus busy input/output	38~40	—	(Not used)
7	PACK-IN	(Set high)	41	VDD2	Power source terminal
8	CG-SCK	(Set high)	42~54	—	(Not used)
9	—	(Not used)	55	LCD DISP	LCD driver display ON output
10	CG-SI	(Set high)	56	LCD DATA	LCD driver serial data output
11	REMO	(Set high)	57	LCD CLK	LCD driver serial clock output
12	TEL-MU	(Set high)	58	LCD CE	LCD driver latch output
13	CE	Chip enable/Reset signal input (High)	59	PWR LAMP	Power on mode button illumination output (High)
14	ST	Stereo signal input			
15	POWER IN	Power key input (High)	60	—	(Not used)
16	VOL-IN	(Set low)	61	TUNE LAMP	Tune button illumination output (High)
17	VOL-IN1	(Set low)	62	CD-C LAMP	CD-C mode button illumination output (High)
18	AM ON	AM mode output (Low)			
19	FM ON	FM mode output (Low)	63	—	(Not used)
20	P-ON1	Power ON button (Low)	64	CD-S LAMP	CD-S mode button illumination output (High)
21~23	—	(Not used)			
24	MUTE	Mute signal output (Low)	65	CD-C ON	CD-C ON output
25	ANT	Motor ANT ON signal output(High)	66~69	—	(Not used)
26	FMIF	FM IF input	70	2BAND	(Set low)
27	AMIF	AM IF input	71~78	—	—
28	AD-KEY	A/D KEY input	79	EE-DI	(Set low)
29	AD-FAD	(Set low)	80	SD	SD signal input
30	VDD1	Power source terminal			

ELECTRICAL PARTS LIST

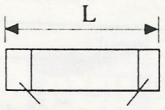

SOLDERING PART

< Chip Parts(Resistors & Capacitors) >

Part No.	L
103L19xOx	2.0mm
103L24xOx	3.2mm

Part No.	L
141L04xOx	3.2mm
141L06xOx	2.0mm

Ref. No.	Part No.	Description
CHIP PARTS(RESISTORS)		
	103L199O9	R-CARBON-CHIP 0Ω
	103L249O9	R-CARBON-CHIP 0Ω
	103L198O4	R-CARBON-CHIP 2.2Ω
	103L248O7	R-CARBON-CHIP 3.9Ω
	103L240O8	R-CARBON-CHIP 39Ω
	103L240O9	R-CARBON-CHIP 47Ω
	103L241O0	R-CARBON-CHIP 56Ω
	103L191O1	R-CARBON-CHIP 68Ω
	103L241O3	R-CARBON-CHIP 100Ω
	103L241O5	R-CARBON-CHIP 150Ω
	103L241O6	R-CARBON-CHIP 180Ω
	103L241O7	R-CARBON-CHIP 220Ω
	103L192O1	R-CARBON-CHIP 470Ω
	103L192O2	R-CARBON-CHIP 560Ω
	103L192O4	R-CARBON-CHIP 820Ω
	103L192O5	R-CARBON-CHIP 1kΩ
	103L192O6	R-CARBON-CHIP 1.2kΩ
	103L192O7	R-CARBON-CHIP 1.5kΩ
	103L192O8	R-CARBON-CHIP 1.8kΩ
	103L192O9	R-CARBON-CHIP 2.2kΩ
	103L193O0	R-CARBON-CHIP 2.7kΩ
	103L193O1	R-CARBON-CHIP 3.3kΩ
	103L193O2	R-CARBON-CHIP 3.9kΩ
	103L193O3	R-CARBON-CHIP 4.7kΩ
	103L193O4	R-CARBON-CHIP 5.6kΩ
	103L193O5	R-CARBON-CHIP 6.8kΩ
	103L193O7	R-CARBON-CHIP 10kΩ
	103L193O8	R-CARBON-CHIP 12kΩ
	103L193O9	R-CARBON-CHIP 15kΩ
	103L194O1	R-CARBON-CHIP 22kΩ
	103L194O3	R-CARBON-CHIP 33kΩ
	103L194O5	R-CARBON-CHIP 47kΩ
	103L194O9	R-CARBON-CHIP 100kΩ
	103L195O3	R-CARBON-CHIP 220kΩ
	103L195O5	R-CARBON-CHIP 330kΩ
	103L195O7	R-CARBON-CHIP 470kΩ
	103L195O9	R-CARBON-CHIP 680kΩ
	103L196O1	R-CARBON-CHIP 1MΩ
CHIP PARTS (CAPACITORS)		
	141L071O7	C-CERAMIC-CHIP 18P
	141L071O9	C-CERAMIC-CHIP 22P
	141L073O5	C-CERAMIC-CHIP 100P
(PCB-IF)	141L083O5	C-CERAMIC-CHIP 100P
	155L024O1	C-CERAMIC-CHIP 180P
	141L060O5	C-CERAMIC-CHIP 470P
	141L060O9	C-CERAMIC-CHIP 0.001
	141L061O0	C-CERAMIC-CHIP 0.0012
	141L061O3	C-CERAMIC-CHIP 0.0022
	141L061O5	C-CERAMIC-CHIP 0.0033
	141L061O9	C-CERAMIC-CHIP 0.0068
	141L062O1	C-CERAMIC-CHIP 0.01
	141L062O3	C-CERAMIC-CHIP 0.015
	141L062O5	C-CERAMIC-CHIP 0.022
	141L062O9	C-CERAMIC-CHIP 0.047
(PCB-IF)	141L067O8	C-CERAMIC-CHIP 0.047
	141L068O3	C-CERAMIC-CHIP 0.082
	141L065O8	C-CERAMIC-CHIP 0.1
(PCB-IF)	141L068O0	C-CERAMIC-CHIP 0.1
	189L077O2	C-TANTALUM-CHIP 0.33
	141L049O2	C-CERAMIC-CHIP 1
CHIP PARTS (SEMICONDUCTORS)		
Q702,705	260L017O3	TR-CHIP 2SA1037S
Q703,706,709	260L035O1	TR-CHIP 2SC2411Q
Q1,2,4~6,etc.	260L016O3	TR-CHIP 2SC2412S
Q801	260P597O1	TR-CHIP 2SK536
Q708	260L042O4	TR-CHIP DTA114T
Q904,911,etc.	260L013O1	TR-CHIP DTA124E
Q802,804,931	260L030O3	TR-CHIP DTA144E
Q916,917,920	260L030O6	TR-CHIP DTB143E
Q101,803,etc.	260L014O1	TR-CHIP DTC124E
Q922	260L042O1	TR-CHIP DTC124T
Q7	260L042O3	TR-CHIP DTC144T
Q310,410,etc.	260L033O1	TR-CHIP DTC323T
RESISTORS		
F951	103L390O1	R-FUSE 22Ω 1/2W
VR103	127L010O3	VR-SF 5kΩ
VR1	127L010O4	VR-SF 10kΩ
VR101,102	127L010O7	VR-SF 100kΩ
VR991,992	127L024O3	VR-SF 200kΩ
VR302	129L357O1	VR
VR901	129L358O1	VR
VR303	129L377O1	VR
SEMICONDUCTORS		
Q951	260P594O1	TR 2SB1240Q
Q913	260P530O1	TR 2SC3420
Q903	260P438O2	TR 2SD1273P
Q901	260P608O1	TR 2SD1858Q
Q910	260P609O1	TR 2SD1860Q
D1,801,910,etc.	264P284O1	DIODE 1SS133
D901,902,904	264L032O1	DIODE ERA15-02
D903	264P407O1	DIODE G3D
D972	264P443O5	DIODE MTZ2.7A
D912	264P441O8	DIODE MTZ5.6C
D913	264P440O2	DIODE MTZ8.2B
D906	264P443O7	DIODE MTZ9.1A
D914	264P440O4	DIODE MTZ10C
D905,907	264P440O6	DIODE MTZ11B
D701~703	264P442O8	DIODE MTZ27D

Ref. No.	Part No.	Description
IC1	266P438O1	IC AN7292NSC
IC301	272P224O1	IC TA8184P
IC302	266P451O1	IC LA4708F
IC303	272P217O3	IC NJM4565M
IC801	263P549O1	IC UPD17010GF-630
IC901	263P861O1	IC LC75823W
COILS & TRANS		
L1,901	351L041O3	COIL-CHOKE
L901	351L062O2	TRANS-CHOKE
L902	351L120O5	COIL-CHOKE
T991	364L008O1	TRANS-IF
CONNECTORS		
P801	242M387O8	LEAD-CONNECTOR 3P
J301	242L583O1	LEAD-CONNECTOR 5P
P301	452D130O5	CONNECTOR 5P
J805	452L201O5	CONNECTOR 5P
P805	452L207O5	CONNECTOR 5P
J806	452L201O6	CONNECTOR 6P
P806	452L207O6	CONNECTOR 6P
J807	452L201O7	CONNECTOR 7P

Ref. No.	Part No.	Description
P807	452L207O7	CONNECTOR 7P
P901	452L180O1	CONNECTOR 14P
CN1	452M095O1	CONNECTOR 15P
OTHERS		
LP903,905, 907~909, 914,919	253L121O1	LAMP
LP915,918	253L121O4	LAMP
LP910	253L121O8	LAMP
LP901,902	253L306O1	LAMP
X801	285L003O5	CRYSTAL 4.5MHz
LCD	289P115O1	LCD
FE1	295P155O1	TUNER-AM/FM
Z1	299L012O2	PROTECTOR
F901	299P101O1	PROTECTOR
CF1	296P081O1	CERAMIC-FILTER
CF2	299P115O1	CERAMIIC-OSC
S903~913	432L092O1	SW-PUSH
J1	449L076O3	SOCKET-ANT
J701	449L078O5	SOCKET-DIN 13P

PRINTED CIRCUIT BOARD PCB-MAIN

Model : AR-4525W

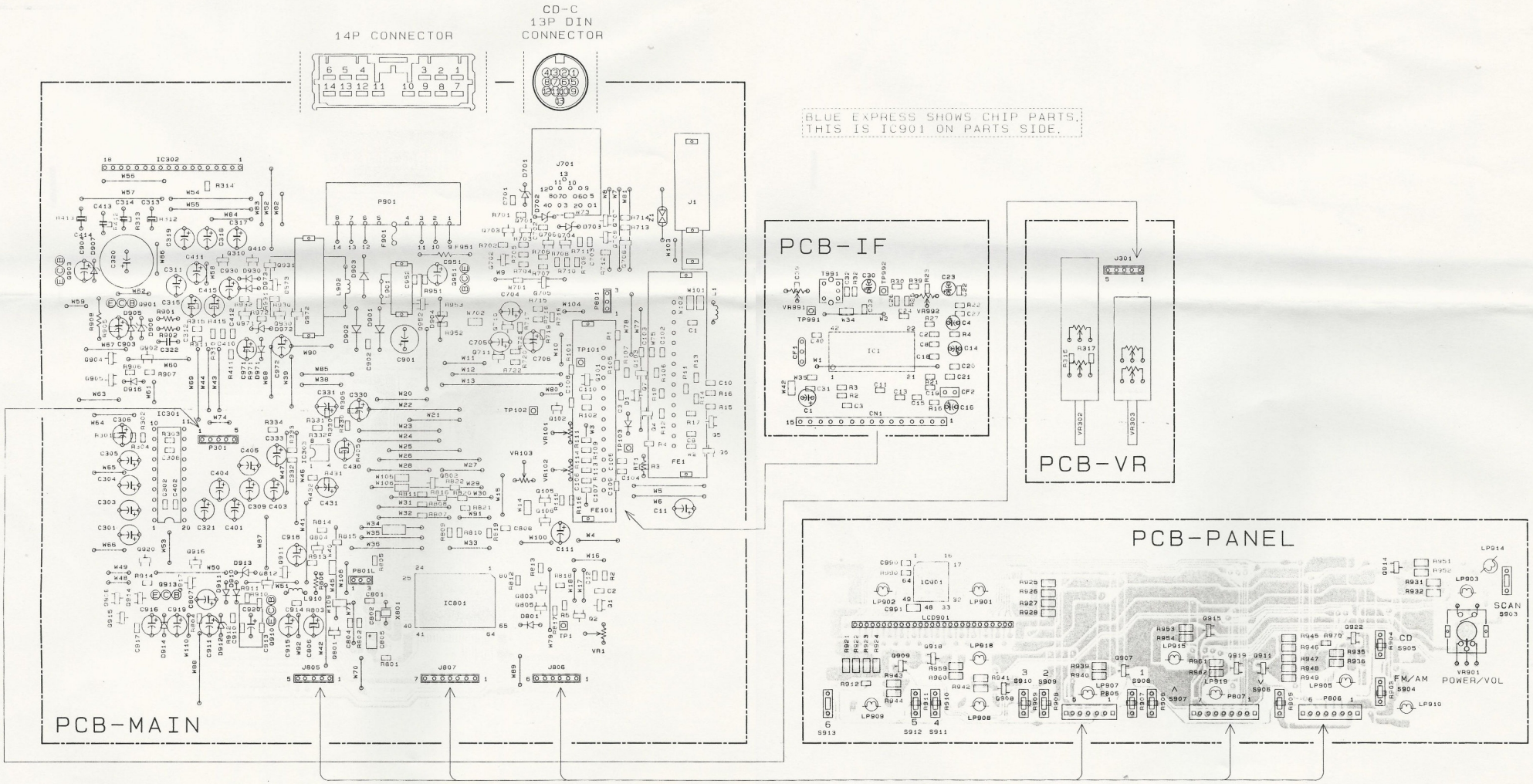

SCHEMATIC DIAGRAM

Model : AR-4525W

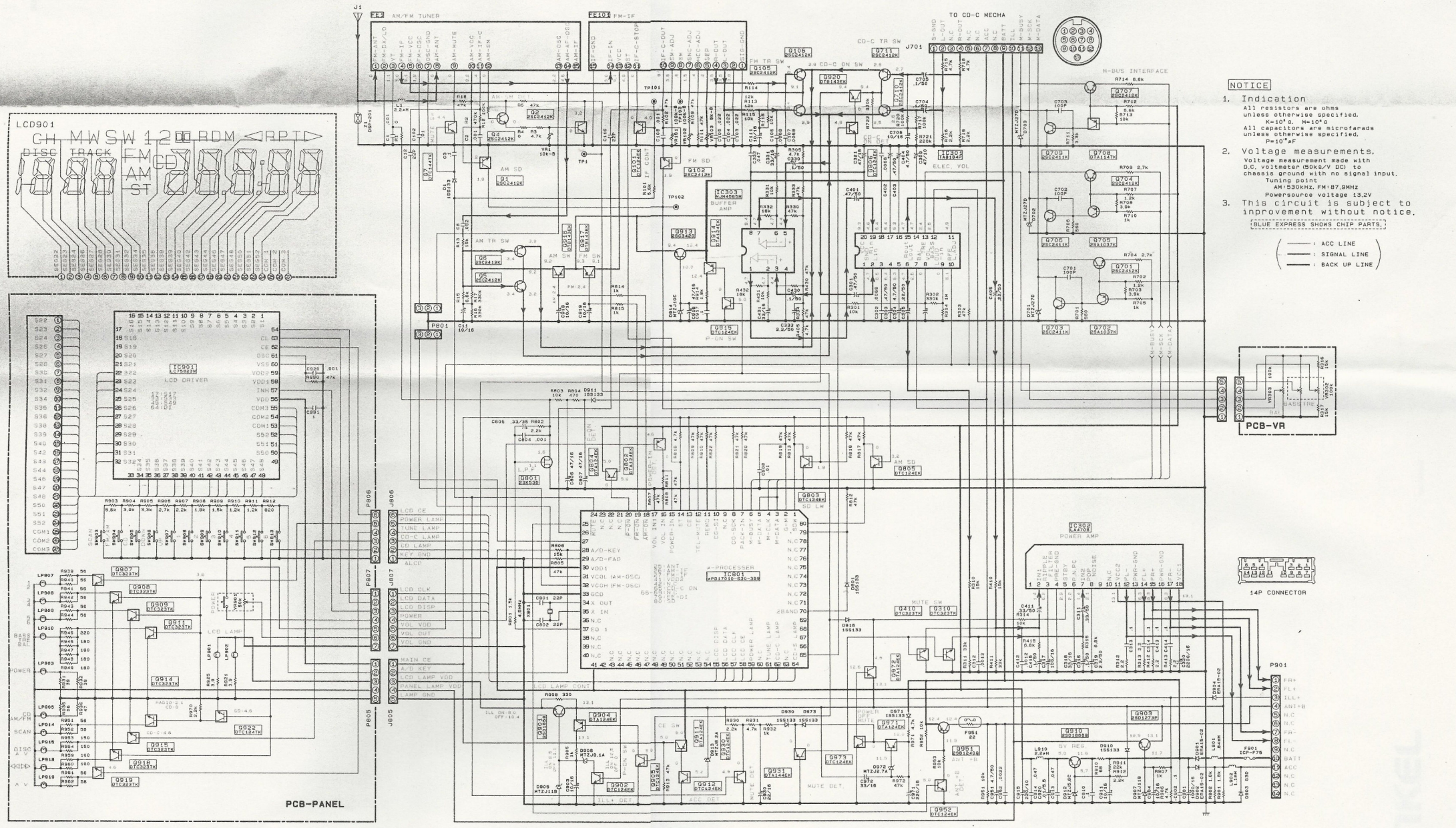

NOTICE

1. Indication
   All resistors are ohms unless otherwise specified.
   K=10³Ω, M=10⁶Ω
   All capacitors are microfarads unless otherwise specified.
   P=10⁻¹²F
2. Voltage measurements.
   Voltage measurement made with D.C. voltmeter (50kΩ/V DC) to chassis ground with no signal input.
   Tuning point
   AM:530kHz, FM:87.9MHz
   Powersource voltage 13.2V
3. This circuit is subject to inprovement without notice.

BLUE EXPRESS SHOWS CHIP PARTS.

: ACC LINE
: SIGNAL LINE
: BACK UP LINE