MITSUBISHI

SERVICE MANUAL

AM/FM-ST ELECTRONIC TUNING RADIO

MODEL : AR-4379,Y (PART No. MB572639, MB572640) (ID No. J768, J767)
AR-4329,Y (PART No. MB572660, MB572661) (ID No. J771, J772)

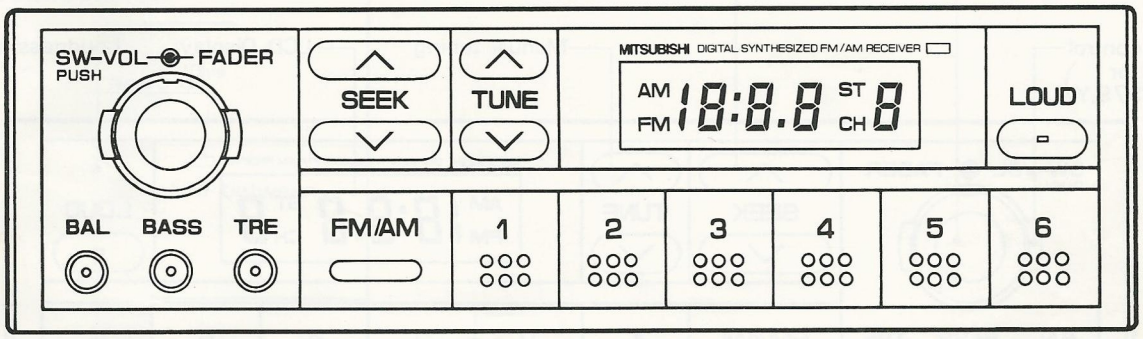

PICTURE : AR-4379

CONTENTS

- SEPCIFICATIONS ····· 1
- OPERATION ····· 1
- ALIGNMENT PROCEDURE ····· 2,3
- SCHEMATIC DIAGRAM ····· 4
- PRINTED CIRCUIT BOARD ····· 5
- FM TUNER (FE101) ····· 6 (Schematic Diagram and Printed Circuit Board)
- AM/FM FRONT END (Schematic Diagram) ····· 6
- ASSY-TONE (Schematic Diagram and Printed Circuit Board) ····· 7
- EXPLODED VIEW (Chassis) ····· 8
- MECHANICAL PARTS LIST ····· 9
- ELECTRICAL PARTS LIST ····· 10,11
- IC EXPLANATION ····· 12,13

FEATURES

- Digital synthesized tuning, AM/FM MPX.
- Manual tuning by TUNE button.
- Auto seek tuning by SEEK button.
- 6 Memory selection buttons. (6 AM and 6 FM)
- No memory button memory system. (Press memoy selection button for 1.5 seconds for memory)
- 4 Channels middle power amplifier. (12W Maximum output X 4)
- Bass and treble tone control.
- Loudness circuit. (LOUD SW)

SPECIFICATIONS

	AM	FM
● Tuning Range :	522kHz~1611kHz	87.5MHz~108.0MHz
● Intermediate : Frequency	450kHz	10.7MHz
● Sensitivity :	12dB/μV(6dB S/N)	5dB/μV(−3dB Limiting)
● Signal to Noise : Ratio(60dB/μV Input)	50dB	57dB
● Stereo Separation :	———	33dB(1kHz)
● Stop Sensitivity :	39dB±6dB(999kHz)	22dB±7dB(98.1MHz)

● Power Supply : DC13.2V±2.4V⊖Ground

● Current Consumption : ACC Output 1W 2.1A±20%
ACC Output Max 6.8A±20%
ILL 0.27A±20%
BATT 0.75mA±20%

● Output Impedance : 4Ω×4(4SP)

● Dimensions : 178(W)×50(H)×150(D)mm

● Weight : 1.07kg

OPERATION

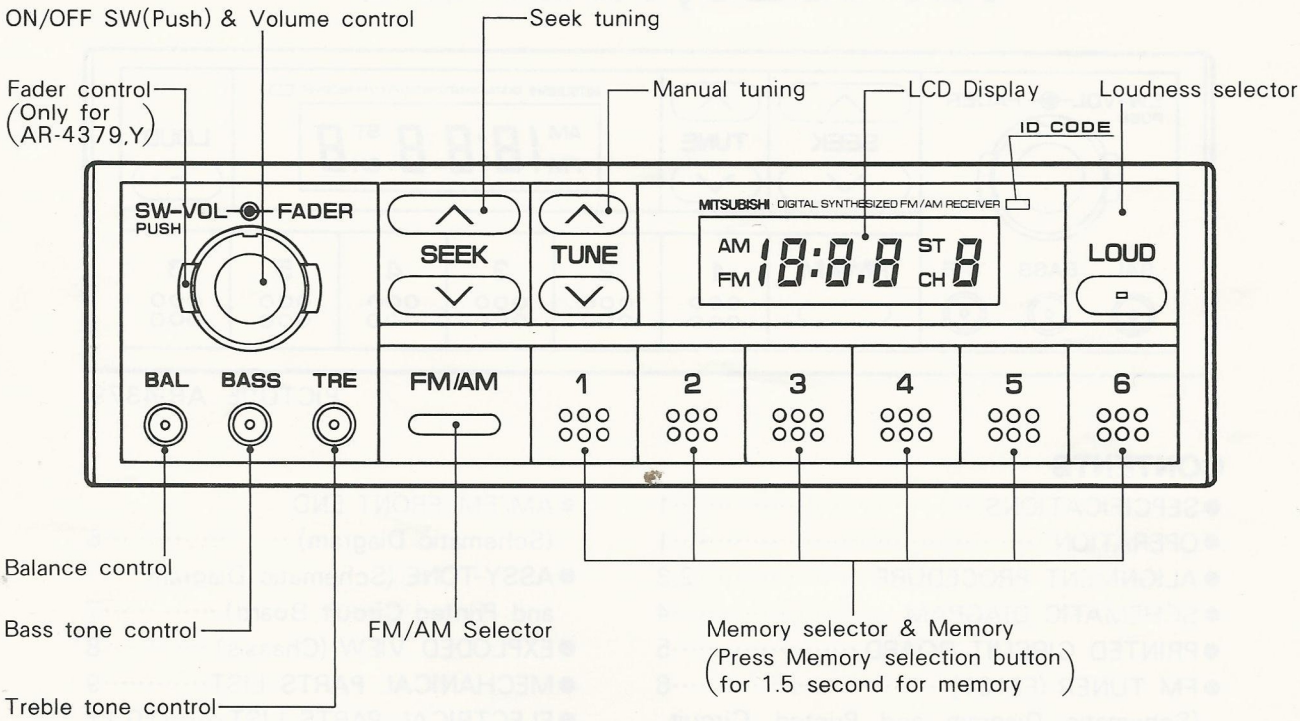

COMPARISON LIST

MODEL / DESCRIPTION	AR-4379 (MB572639)	AR-4379Y (MB572640)	AR-4329 (MB572660)	AR-4329Y (MB572661)
I.D. CODE (Shown on display window)	J768	J767	J771	J772
LETTER COLOR OF BUTTONS	WHITE	AMBER	WHITE	AMBER
LIGHTING COLOR	GREEN	AMBER	GREEN	WHITE
FADER CONTROL	YES		NO	
SPEAKER OUTPUT	4 CH		2 CH	

ALIGNMENT PROCEDURE (Except for AM FM Front End part)

(1) Dummy Antenna Circuit

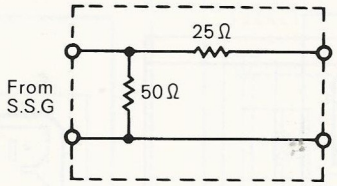

(FM)

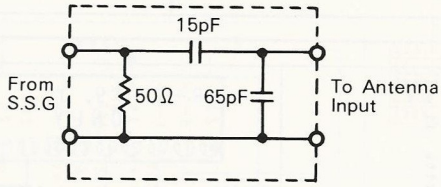

(AM)

For 50 ohms Loaded Type Signal Generator.

(2) Conditions and Setting

Source Voltage : 13.2V
Loud : OFF
BAL, BASS, TRE, FADER : Center
(AR-4379, Y)

(3) Connections, Test Point and Adjustment Locations

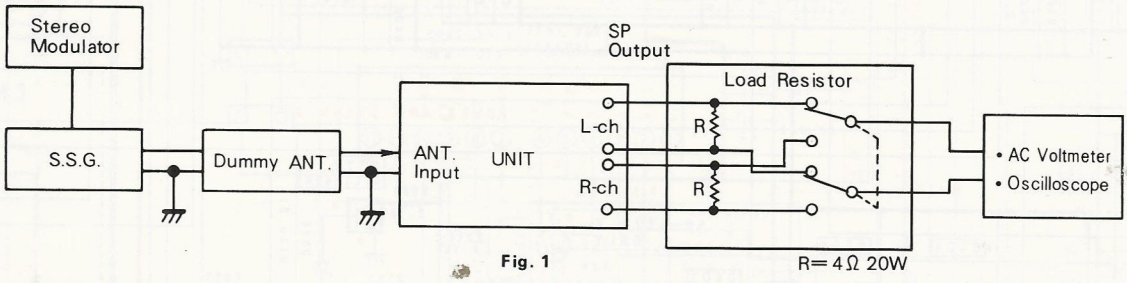

Fig. 1

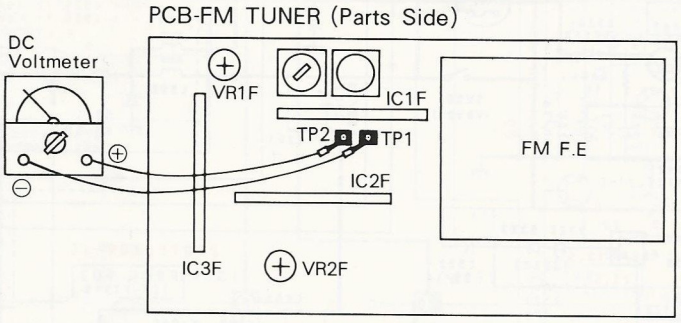

Fig. 2

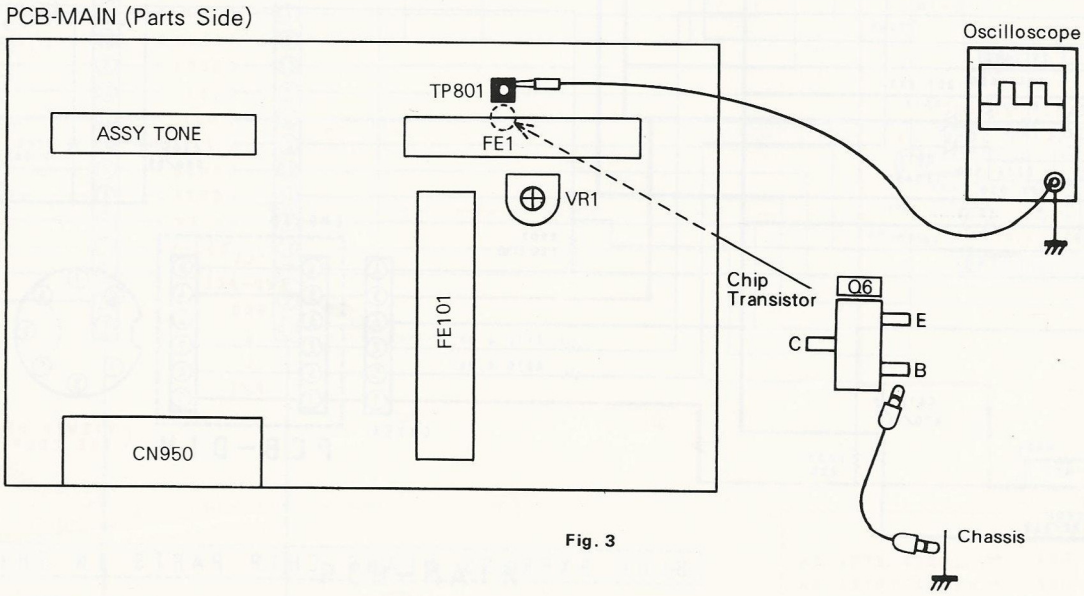

Fig. 3

(4) Adjustment Procedure

FM

Adjustment point (Description)	S.S.G Condition	Tuning point	Connection	Procedure
IFT1F (DET. Adjustment)	98.1MHz, 68dB (μV) No Mod.	98.1MHz	Fig. 1 + Fig. 2	Adjust for 0±0.03V
VR1F (Stop Sensitivity Adjustment)	98.1MHz, 22dB (μV) Mod. Mono		Fig. 1 + Fig. 3	Adjust for change point High to Low 5V 0V TP801 Voltage Wave (example)
VR2F (Separation Adjustment)	98.1MHz, 68dB (μV) Mod, Stereo Left alt, Right ch.		Fig. 1	Adjust for best separation between Left and Right ch.

Note : Mod, Mono = 400Hz 22.5KHz (30%)
Mod, Stereo = Main : 400Hz 20.25KHz (27%)
Pilot : 19KHz 7.5KHz (10%)

AM

Adjustment point (Description)	S.S.G Condition	Tuning point	Connection	Procedure
VR1 (Stop Sensitivity Adjustment)	999KHz 39dB (μV) Mod, 400Hz 30%	999KHz	Fig. 1 + Fig. 3	Adjust for. 5V 0V TP801 Voltage Wave (example)

SCHEMATIC DIAGRAM MODEL: AR-4379,Y·4329,Y

: ACC LINE
: BACK UP LINE

NOTICE

1. Indication
   - All resistors are ohms unless otherwise specified,
     K=10^3 ohm, M=10^6 ohm,
   - All capacitors are microfarads unless otherwise specified,
     P=10^{-6} microfarad,
2. Voltage Measurements,
   Voltage measurement made with D.C. voltmeter (50KΩ/VDC) to chassis ground with no signal input.
   Tuning point
   AM: 531KHZ, FM: 87.9MHZ
   Source voltage 14.4v.
3. This circuit is subject to inprovement without notice,

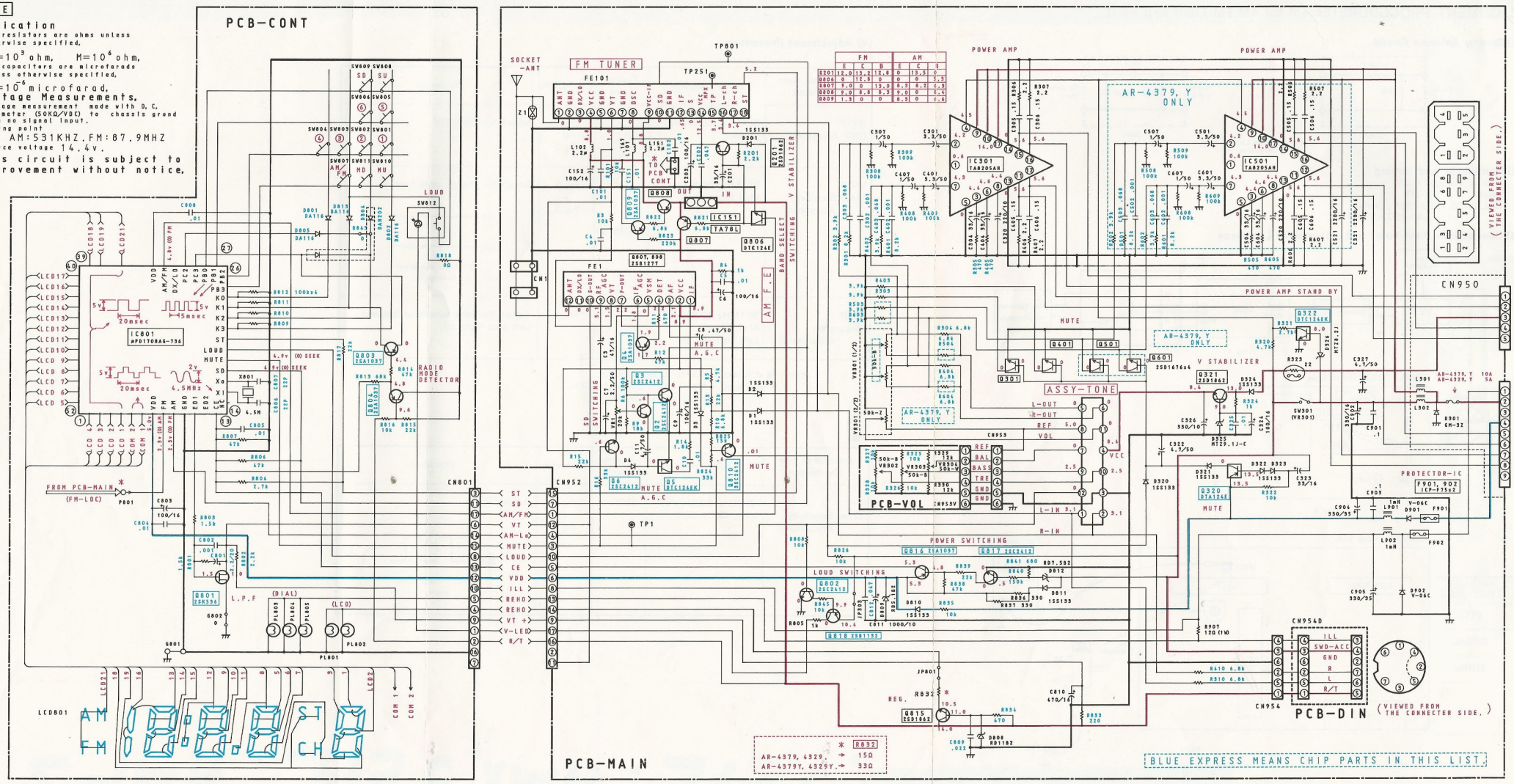

PRINTED CIRCUIT BOARD(Pattern Side) MODEL: AR-4379,Y·4329,Y

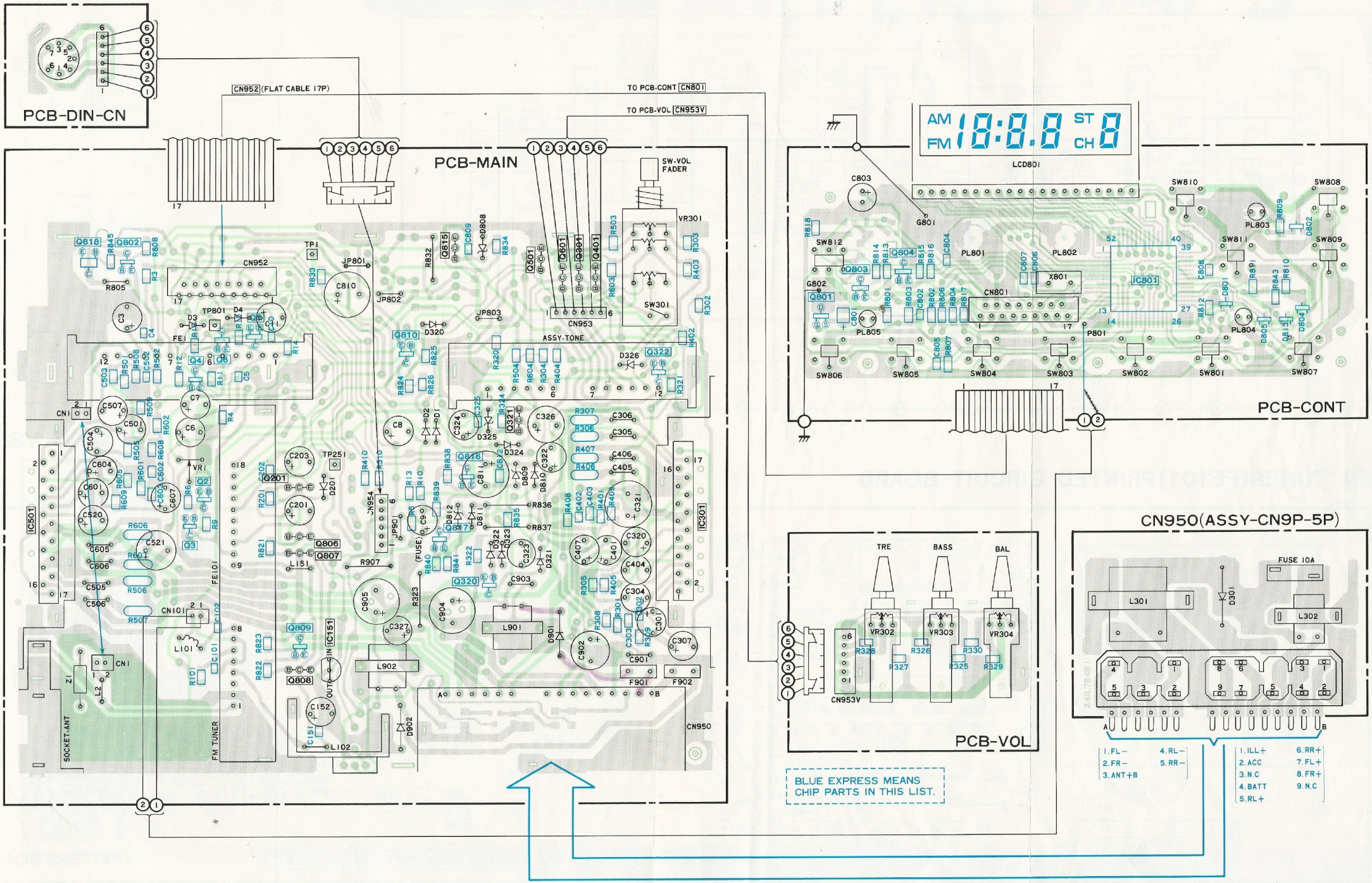

FM TUNER(FE101)SCHEMATIC DIAGRAM

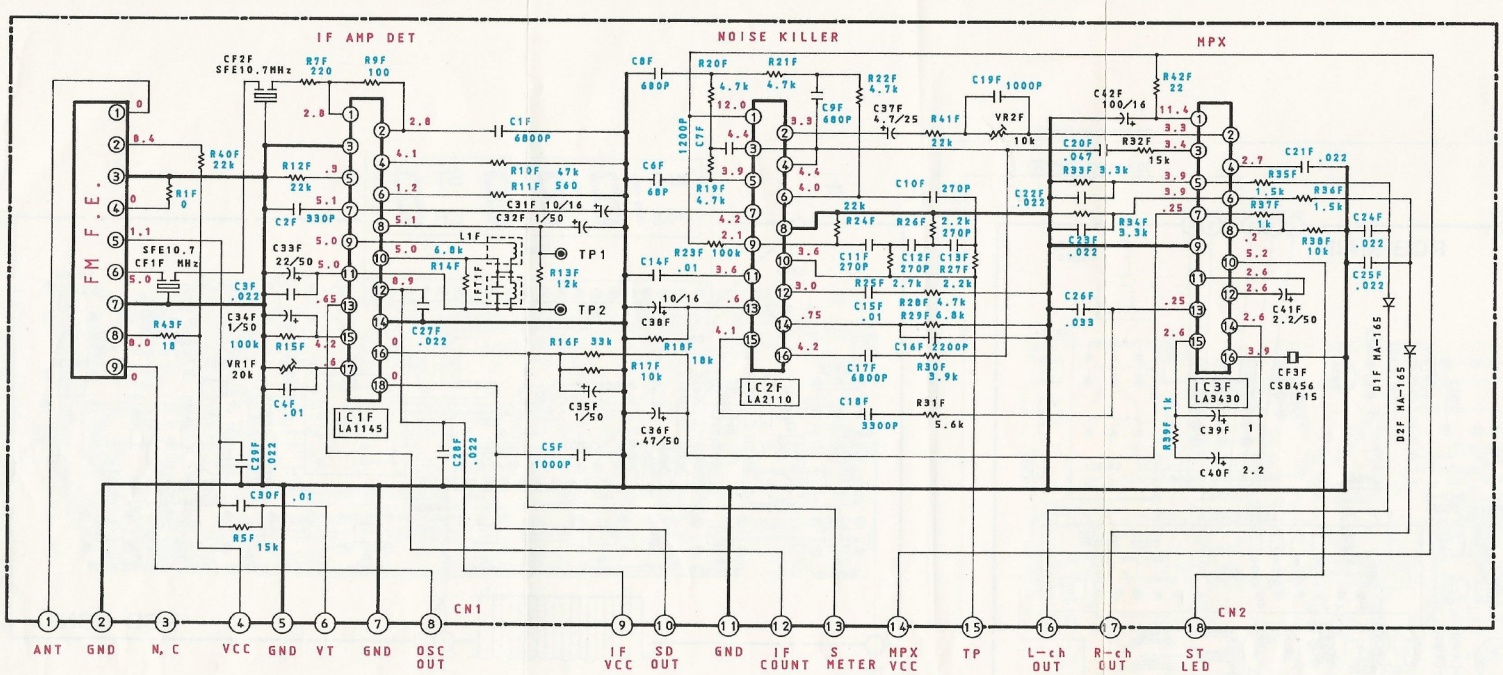

FM TUNER(FE101)PRINTED CIRCUIT BOARD

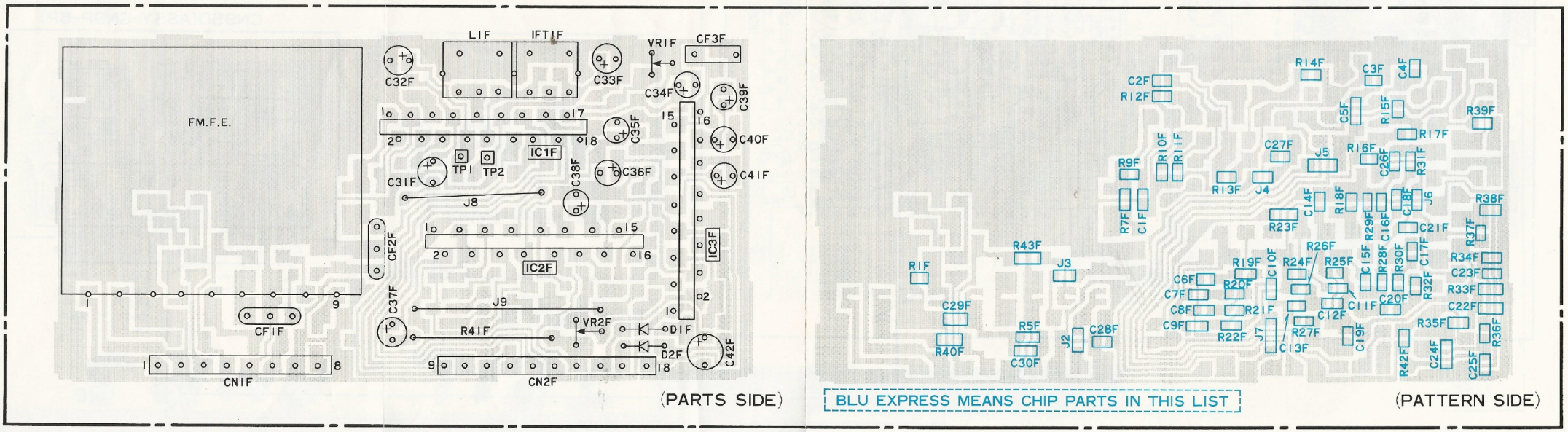

AM TUNER SCHEMATIC DIAGRAM

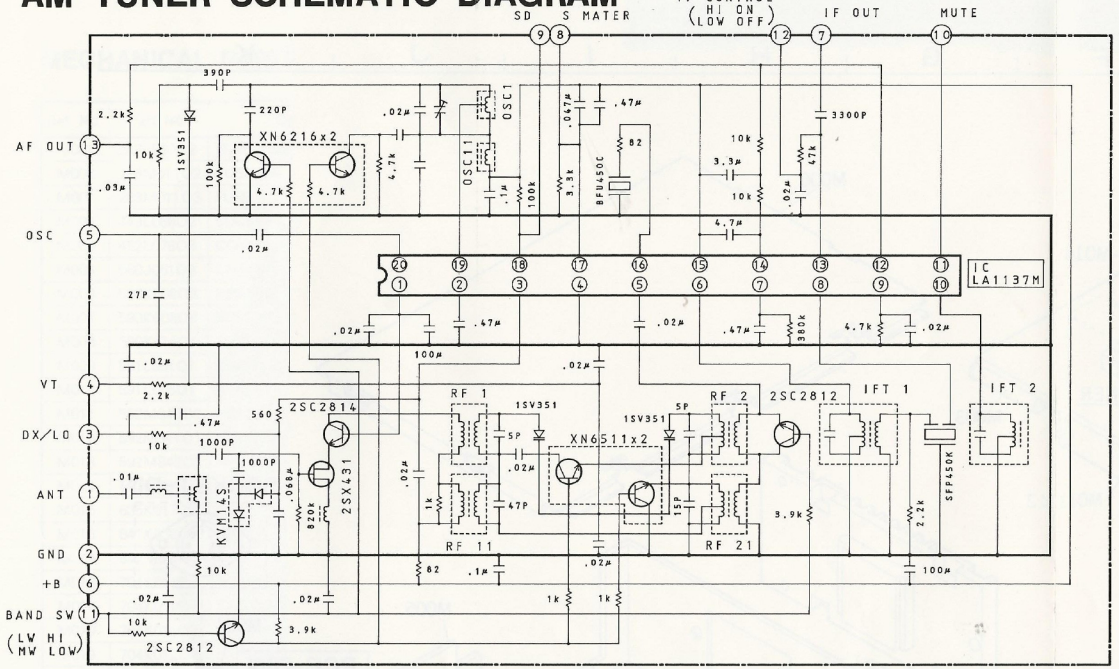

FM FRONT END SCHEMATIC DIAGRAM

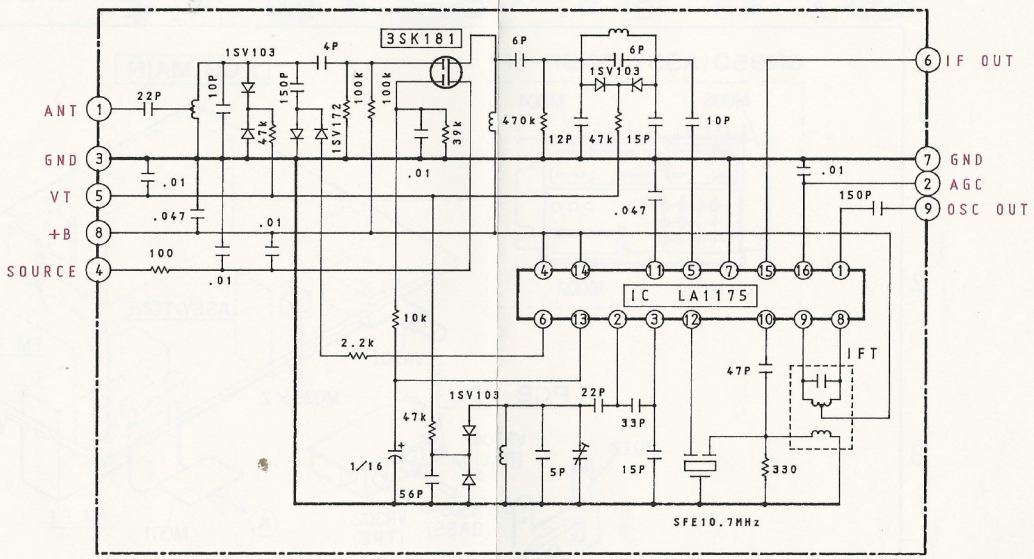

ASSY TONE SCHEMATIC DIAGRAM

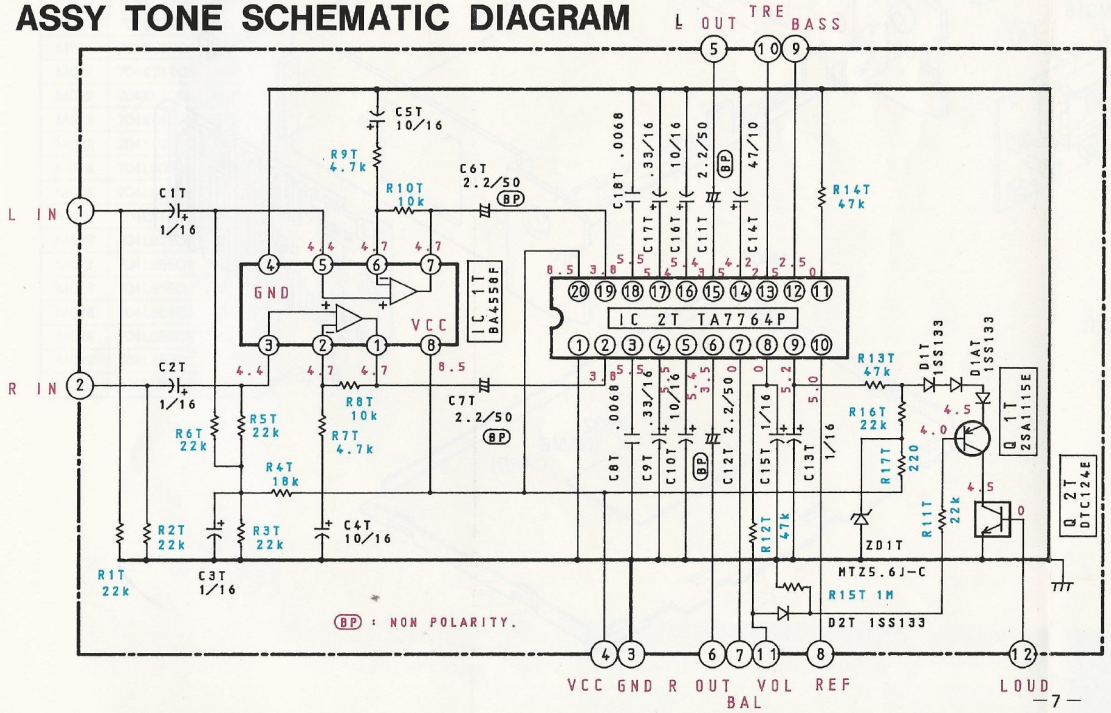

ASSY TONE PRINTED CIRCUIT BOARD

BLU EXPRESS MEANS CHIP PARTS IN THIS LIST

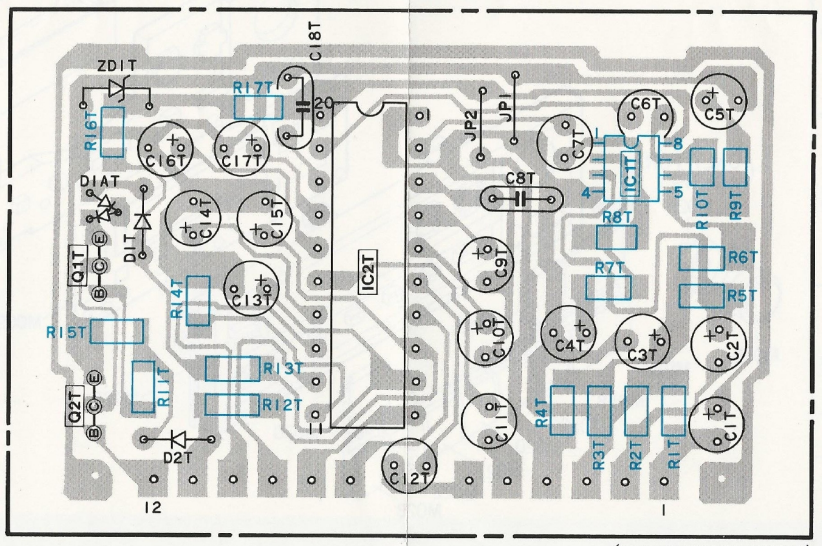

EXPLODED VIEW CHASSIS

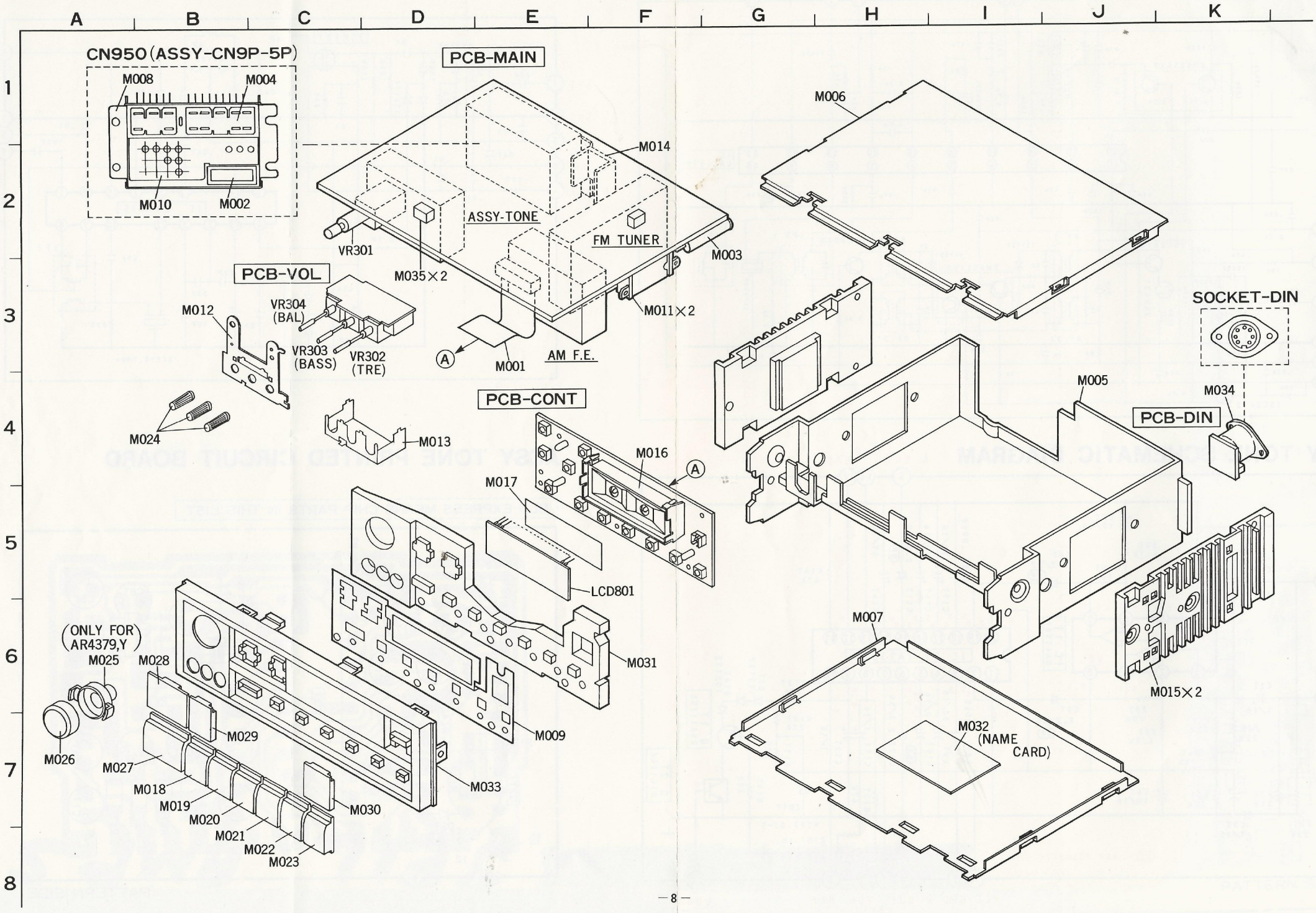

MECHANICAL PARTS LIST

MODEL No. : AR-4379 ···① AR-4329 ···③
AR-4379Y···② AR-4329Y···④

Ref. No.	Part No.	Description	Index
M001	242L96002	FLAT CABLE-17P	E-3
M002	283M01102	FUSE 5A ③④	B-2
M002	283M01103	FUSE 10A ①②	B-2
M003	449L06602	SOCKET-ANT	G-2
M004	452L07603	CONNECTOR 9P-5P	C-1
M005	560J05103	CHASSIS	J-4
M006	590K60803	UPPER COVER	H-1
M007	590K60804	BOTTOM COVER	H-6
M008	590K61401	SHIELD CASE	B-1
M009	591L55101	EARTH PLATE	E-7
M010	591L56501	SHIELD PLATE	B-2
M011	592M84002	HOLDER-IC	F-3
M012	592M84101	HOLDER-VR	B-3
M013	592M84202	HOLDER-BT	D-4
M014	592M86001	HOLDER-TR	F-2
M015	635K01702	HEAT SINK	K-6
M016	641K03801	HOLDER-LCD	F-4
M017	642M63901	SHEET-LCD	E-5
M018	704K01101	BUTTON-CH(1) ①③	B-7
M018	704K01201	BUTTON-CH(1) ②④	B-7
M019	704K01102	BUTTON-CH(2) ①③	B-7
M019	704K01202	BUTTON-CH(2) ②④	B-7
M020	704K01103	BUTTON-CH(3) ①③	B-7
M020	704K01203	BUTTON-CH(3) ②④	B-7
M021	704K01104	BUTTON-CH(4) ①③	B-8
M021	704K01204	BUTTON-CH(4) ②④	B-8
M022	704K01105	BUTTON-CH(5) ①③	C-8
M022	704K01205	BUTTON-CH(5) ②④	C-8
M023	704K01106	BUTTON-CH(6) ①③	C-8
M023	704K01206	BUTTON-CH(6) ②④	C-8
M024	704L80902	KNOB-BAL	B-4
M025	704L81001	KNOB-FAD ①②	A-6
M026	704L81102	KNOB-VOL ①②	A-7
M026	704L82601	KNOB-VOL ③④	A-7
M027	704L85501	BUTTON-BAND(AM/FM)①③	A-7
M027	704L85502	BUTTON-BAND(AM/FM)②④	A-7
M028	704L85601	BUTTON-SEEK ①③	B-6
M028	704L85602	BUTTON-SEEK ②④	B-6
M029	704L85701	BUTTON-TUNE ①③	B-7
M029	704L85702	BUTTON-TUNE ②④	B-7
M030	704L85801	BUTTON-LOUD ①③	C-7
M030	704L85802	BUTTON-LOUD ②④	C-7
M031	761K06501	PRISM	F-6
M032	850L44506	NAME CARD (AR-4379) ①	I-7
M032	850L44507	NAME CARD (AR-4379Y) ②	I-7
M032	850L44603	NAME CARD (AR-4329) ③	I-7
M032	850L44604	NAME CARD (AR-4329Y) ④	I-7
M033	963M02003	ASSY PANEL (AR-4379) ①	D-7
M033	963M02004	ASSY PANEL (AR-4379Y) ②	D-7
M033	963M02005	ASSY PANEL (AR-4329) ③	D-7
M033	963M02006	ASSY PANEL (AR-4329Y) ④	D-7
M034	449L06701	SOCKET-DIN	K-4
M035	813M22702	CUSHION	D-3

ELECTRICAL PARTS LIST

MODEL : AR-4379 ···① AR-4329 ···③
AR-4379Y···② AR-4329Y···④

Ref. No.	Part No.	Description
PCB-MAIN		
VR301	122L134O4	VR-DOUBLE SHAFT 50kΩ-B ①②
VR301	122L135O2	VR-DOUBLE SHAFT 50kΩ-Z ③④
VR1	127L010O5	VR-SEMIFIXED 20kΩ-B
Q201,321,815	260P485O1	TR 2SD1227MQ(2SD1862Q)
Q807,808	260P486O1	TR 2SB822Q(2SB1227Q)
Q806	260P525O1	TR DTC124ES
Q301,401	260P581O1	TR 2SD1676
Q501,601	260P581O1	TR 2SD1676 ①②
D812	264P448O5	DIODE 7.5ES
D901,902	264P088O1	DIODE V06C
D1～4,201,810, 320～324,811	264P284O1	DIODE 1SS133
D326	264P440O2	DIODE MTZ8.2J-B
D325	264P440O3	DIODE MTZ9.1J-C
D809	264P448O3	DIODE RD5.1ES
D808	264P448O6	DIODE RD11ES
IC151	266P916O3	IC TA78L009AP
IC301	272P174O1	IC TA8205AH
IC501	272P174O1	IC TA8205AH ①②
L102,151	351L030O2	COIL CHOKE 2.2μH
L901,902	351L062O2	TRANS CHOKE 1mH
L101	361M004O2	COIL-RF 0.09μH
CN953	242L583O7	LEAD CONNECTOR-PH 6P
CN954D	242L584O0	LEAD CONNECTOR-PH 6P
CN1	242M476O2	LEAD CONNECTOR-2P
FE1	295P179O2	TUNER-AM
FE101	295P188O2	TUNER-FM
Z1	299L012O1	SURGE PROTECTOR
F901,902	299P101O1	PROTECTOR-IC ICP-F75
CN952	452C037O6	CONNECTOR-FPC 17P
CN101	452D130O2	CONNECTOR-S 2P
CN953V,954	452D130O6	CONNECTOR-S 6P
R833	103L241O7	R-CARBON CHIP 220Ω
R11,305,405, 834	103L242O1	R-CARBON CHIP 470Ω
R505,605	103L242O1	R-CARBON CHIP 470Ω ①②
R841	103L242O3	R-CARBON CHIP 680Ω
R4,324	103L242O5	R-CARBON CHIP 1kΩ
R14	103L242O8	R-CARBON CHIP 1.8kΩ
R201	103L242O9	R-CARBON CHIP 2.2kΩ
R321	103L243O0	R-CARBON CHIP 2.7kΩ
R302,402	103L243O2	R-CARBON CHIP 3.9kΩ
R502,602	103L243O2	R-CARBON CHIP 3.9kΩ ①②
R5,320	103L243O3	R-CARBON CHIP 4.7kΩ
R10,304,310, 404,410,504, 604,821,822	103L243O5	R-CARBON CHIP 6.8kΩ
R301,401	103L243O6	R-CARBON CHIP 8.2kΩ
R501,601	103L243O6	R-CARBON CHIP 8.2kΩ ①②
R3,101,322, 826,835,845	103L243O7	R-CARBON CHIP 10kΩ
R329,330	103L243O8	R-CARBON CHIP 12kΩ
R825	103L243O9	R-CARBON CHIP 15kΩ
R9	103L244O0	R-CARBON CHIP 18kΩ
R13,15,303, 403,839	103L244O1	R-CARBON CHIP 22kΩ
R503,603	103L244O1	R-CARBON CHIP 22kΩ ①②
R16,808,824	103L244O3	R-CARBON CHIP 33kΩ
R12,838	103L244O5	R-CARBON CHIP 47kΩ
R6,308,309, 408,409	103L244O9	R-CARBON CHIP 100kΩ
R508,509,608,609	103L244O9	R-CARBON CHIP 100kΩ ①②
R840	103L245O1	R-CARBON CHIP 150kΩ
R823	103L245O3	R-CARBON CHIP 220kΩ
C809	141L042O5	C-CERAMIC CHIP 0.022μF
C202,812	141L042O9	C-CERAMIC CHIP 0.047μF
C303,403	141L043O1	C-CERAMIC CHIP 0.068μF
C503,603	141L043O1	C-CERAMIC CHIP 0.068μF ①②
C4,5,10,101, 102,151,325	141L062O1	C-CERAMIC CHIP 0.01μF
C302,402	141L085O9	C-CERAMIC CHIP 1000PF
C502,602	141L085O9	C-CERAMIC CHIP 1000PF ①②
Q320	260L013O1	TR CHIP DTA124EK
Q5,322	260L014O1	TR CHIP DTC124EK
Q2,3,6,802, 810,817	260L016O1	TR CHIP 2SC2412
Q4,809,816	260L017O1	TR CHIP 2SA1037
Q818	260L031O1	TR CHIP 2SB1132
PCB-CONT		
P801	242M455O5	LEAD CONNECTOR-PH 2P-1P
PL801,802	253L052O3	LAMP 12V 60mA YEL ②④
PL801,802	253L052O5	LAMP 12V 60mA GRN ①③
PL803～805	253L064O2	LAMP 14V 80mA GRN ①③
PL803～805	253L064O3	LAMP 14V 80mA GRN ②④
X801	285P072O3	CRYSTAL 4.5MHz
LCD801	289P031O1	LCD FTD6794H
SW801～811	432L077O3	SW-TACT
SW812	432L081O1	SW-TACT(WITH LED)
CN801	452C037O6	CONNECTOR-FPC 17P
R801,803	103L242O7	R-CARBON CHIP 1.5kΩ
R802	103L242O9	R-CARBON CHIP 2.2kΩ
R804	103L243O0	R-CARBON CHIP 2.7kΩ
R816	103L243O7	R-CARBON CHIP 10kΩ
R815,817	103L244O1	R-CARBON CHIP 22kΩ
R806,807,814	103L244O5	R-CARBON CHIP 47kΩ
R813	103L244O7	R-CARBON CHIP 68kΩ
R809～812	103L244O9	R-CARBON CHIP 100kΩ
R818,843	103L249O9	0Ω CHIP
C804,805,808	141L062O1	C-CERAMIC CHIP 0.01μF
C806,807	141L081O9	C-CERAMIC CHIP 22PF
C802	141L085O9	C-CERAMIC CHIP 1000PF
C801	189L074O9	C-TANTALUM CHIP 2.2μF/20V
Q803,804	260L017O1	TR-CHIP 2SA1037
Q801	260P597O1	TR-CHIP 2SK536
D804	264L030O2	DIODE CHIP DAN202KVA
D801,802,805,813	264L034O1	DIODE CHIP DA116
IC801	272P045O3	IC μPD1708AG-736

ELECTRICAL PARTS LIST

MODEL : AR-4379 ···① AR-4329 ···③
AR-4379Y···② AR-4329Y···④

Ref. No.	Part No.	Description
ASSY-CN-9P-5P		
D301	264P132O1	DIODE GM-3Z
L302	351L062O1	TRANS-CHOKE EI-24
L301	351L062O2	TRANS-CHOKE EI-12
	283M011O2	FUSE 5A ③④
	283M011O3	FUSE 10A ①②
	452L076O3	CONNECTOR-9P-5P
PCB-VOL		
VR302	120L044O1	VR-S-PUSH-LOCK 50kΩ-B(TRE)
VR303	120L044O1	VR-S-PUSH-LOCK 50kΩ-B(BASS)
VR304	120L044O1	VR-S-PUSH-LOCK 50kΩ-B(BAL)
R325～328	103L243O7	R-CARBON-CHIP 10kΩ
ASSY-TONE		
Q2T	260P268O2	TR 2SA1115E
Q1T	260P525O1	TR DTC124ES
D1T,2T	264L029O1	DIODE-LEADLESS RLS73
IC2T	272P153O1	IC TA7764P
R17T	103L241O7	R-CARBON CHIP 220Ω
R7T,9T	103L243O3	R-CARBON CHIP 4.7kΩ
R8T,10T	103L243O7	R-CARBON CHIP 10kΩ
R4T	103L244O0	R-CARBON CHIP 18kΩ
R1T,2T,3T,5T, 6T,11T,16T	103L244O1	R-CARBON CHIP 22kΩ
R12T,13T,14T	103L244O5	R-CARBON CHIP 47kΩ
R15T	103L246O1	R-CARBON CHIP 1MΩ
D3T	264L037O1	DIODE-CHIP DCCO10
D4T	264L055O4	D-ZENER CHIP RLZ5.6J-C
IC1T	266L032O9	IC NJM4558M
FM-TUNER		
VR1F	127M046O1	VR-SEMIFIXED 22kΩ
VR2F	127M046O2	VR-SEMIFIXED 10kΩ
D1F,2F	264P284O1	DIODE 1SS133
IC3F	266M037O6	IC LA3430
IC2F	266P651O1	IC LA2110
IC1F	272P128O1	IC LA1145
L1F	351M031O1	COIL-IF 81N-014A
IFT1F	364M002O1	TRANS IF 81N-014B
FM,F,E	295M011O1	FM FRONT END ET-A082F
CF1F,2F	296M014O1	CERAMIC FILTER
CF3F	299P096O1	CERAMIC OSCILLATOR
R42F	103L190O5	R-CARBON CHIP 22Ω
R9F	103L191O3	R-CARBON CHIP 100Ω
R7F	103L191O7	R-CARBON CHIP 220Ω

Ref. No.	Part No.	Description
R11F	103L192O2	R-CARBON CHIP 560Ω
R39F	103L192O5	R-CARBON CHIP 1kΩ
R35F,36F	103L192O7	R-CARBON CHIP 1.5kΩ
R26F,27F	103L192O9	R-CARBON CHIP 2.2kΩ
R25F	103L193O0	R-CARBON CHIP 2.7kΩ
R34F	103L193O1	R-CARBON CHIP 3.3kΩ
R30F	103L193O2	R-CARBON CHIP 3.9kΩ
R19F,20F,21F, 22F,28F,37F	103L193O3	R-CARBON CHIP 4.7kΩ
R31F	103L193O4	R-CARBON CHIP 5.6kΩ
R14F,29F	103L193O5	R-CARBON CHIP 6.8kΩ
R17F,38F	103L193O7	R-CARBON CHIP 10kΩ
R5F,32F	103L193O9	R-CARBON CHIP 15kΩ
R12F,24F	103L194O1	R-CARBON CHIP 22kΩ
R10F	103L194O5	R-CARBON CHIP 47kΩ
R15F	103L194O9	R-CARBON CHIP 100kΩ
J2F,3F,4F,6F	103L199O9	0Ω CHIP
R1F	103L199O9	0Ω CHIP
R43F	103L240O4	R-CARBON CHIP 18Ω
R33F	103L243O1	R-CARBON CHIP 3.3kΩ
R40F	103L244O1	R-CARBON CHIP 22kΩ
R23F	103L244O9	R-CARBON CHIP 100kΩ
J5F,7F	103L249O9	0Ω CHIP
C5F	141L040O9	C-CERAMIC CHIP 1000PF
C22F,24F,29F	141L042O5	C-CERAMIC CHIP 0.022μF
C2F	141L060O3	C-CERAMIC CHIP 330PF
C16F	141L061O3	C-CERAMIC CHIP 2200PF
C18F	141L061O5	C-CERAMIC CHIP 3300PF
C17F	141L061O9	C-CERAMIC CHIP 6800PF
C4F,14F,15F,30F	141L062O1	C-CERAMIC CHIP 0.01μF
C21F	141L062O3	C-CERAMIC CHIP 0.015μF
C3F,23F,25F, 27F,28F	141L062O5	C-CERAMIC CHIP 0.022μF
C26F	141L067O6	C-CERAMIC CHIP 0.033μF
C20F	141L067O8	C-CERAMIC CHIP 0.047μF
C6F	141L083O1	C-CERAMIC CHIP 68PF
C10F,11F,12F, 13F	141L084O5	C-CERAMIC CHIP 270PF
C8F,9F	141L085O5	C-CERAMIC CHIP 680PF
C19F	141L085O9	C-CERAMIC CHIP 1000PF
C7F	141L086O1	C-CERAMIC CHIP 1200PF
R13F,18F	103L193O8	R-CARBON CHIP 12kΩ
R16F	103L194O3	R-CARBON CHIP 33kΩ

IC EXPLANATION

IC1F LA1145

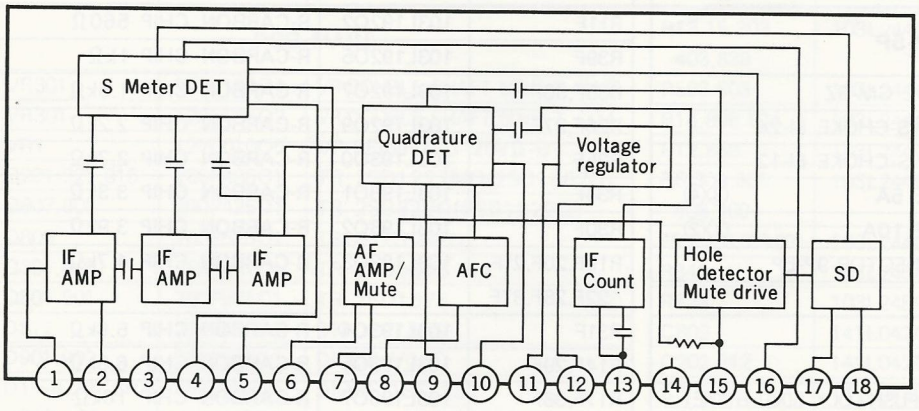

① IF Input
② IF AMP Bias
③ IF AMP GND
④~⑥ Mute Control
⑦ AF Output
⑧ AFC Output
⑨ IF Output
⑩ Quadrature DET Input
⑪ Voltage regulator Output
⑫ VCC
⑬ IF Count Output/Control
⑭ DET GND
⑮ Mute Drive
⑯ S Meter Output
⑰ SD Sensitivity Control.
⑱ SD Output

IC2F LA2110

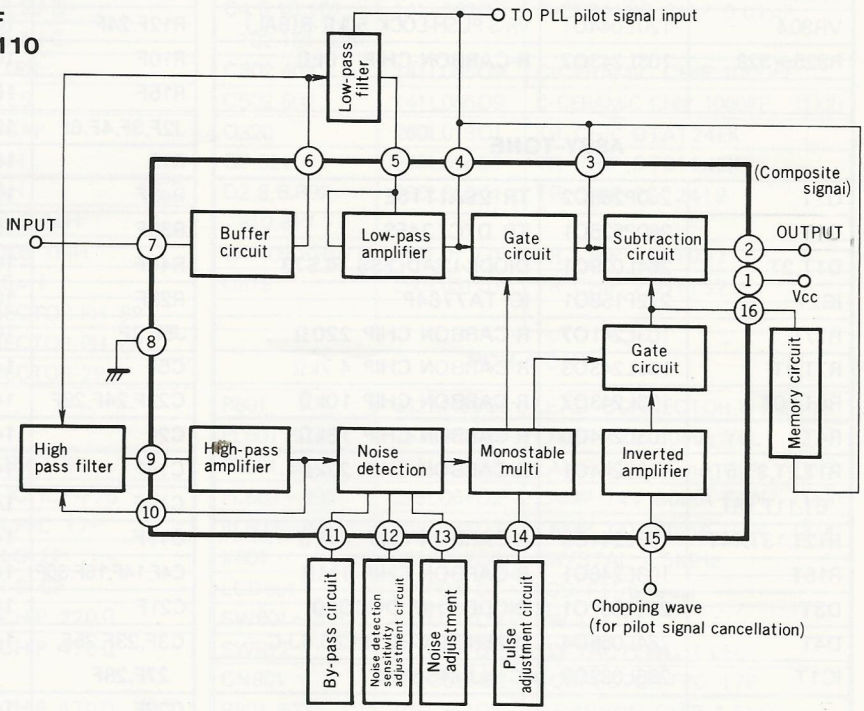

IC1T NJM4558M

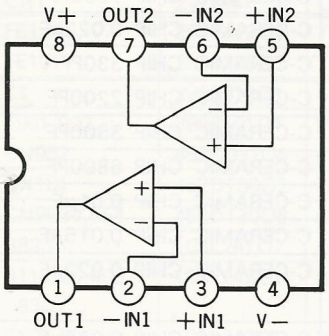

IC2T TA7664P

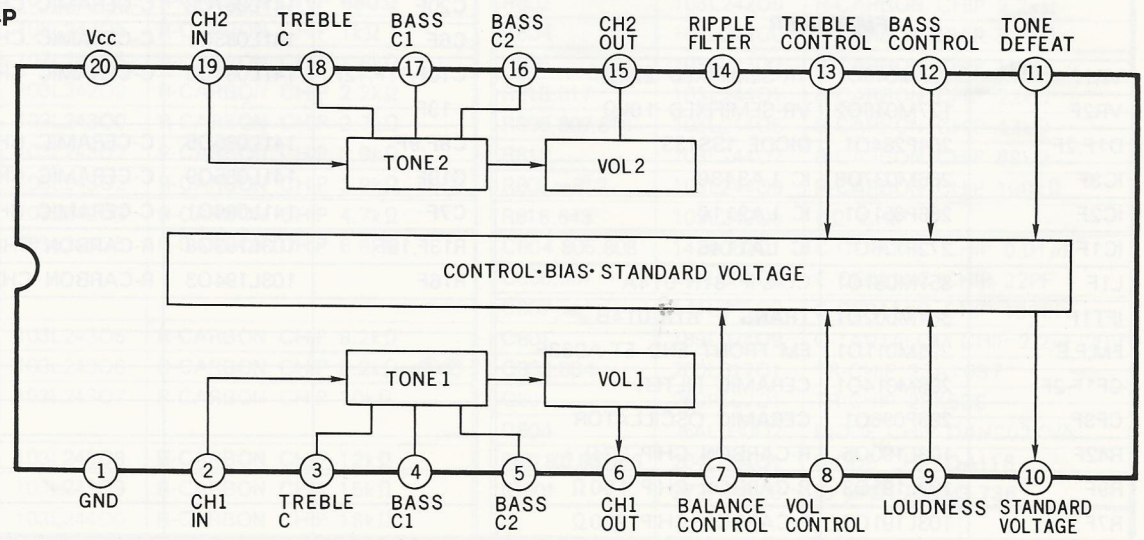

IC3F LA3430

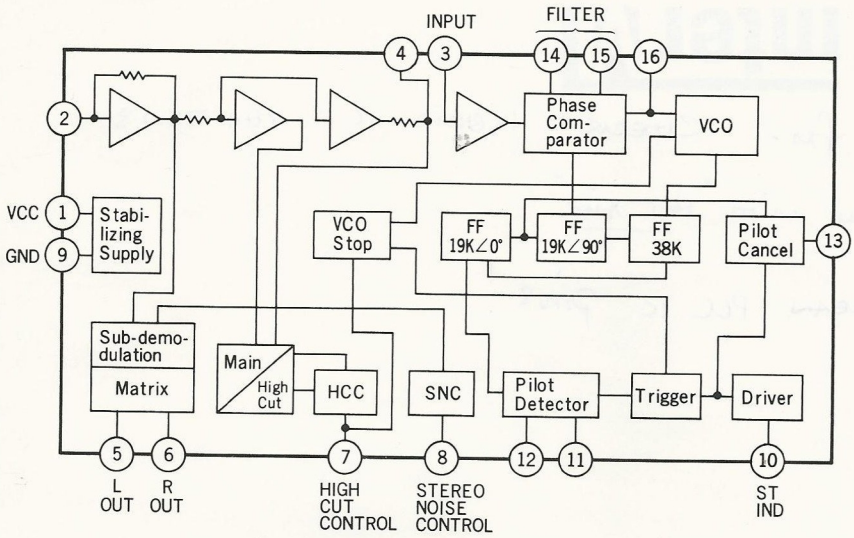

IC301,501 TA8205AH

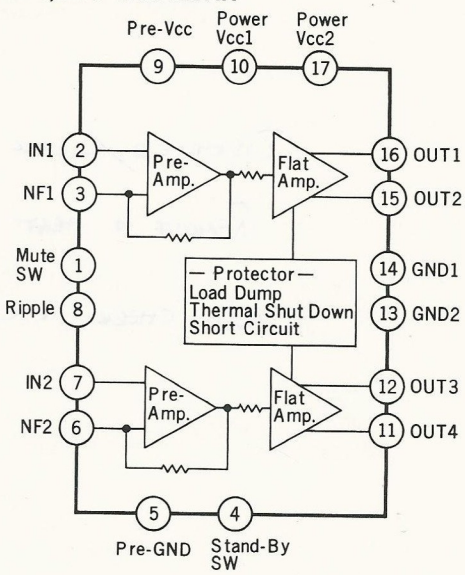

IC801 μPD1708AG-736

Pin No.	Name	Function	Remarks
1 ~ 4	LCD4 ~ LCD1	LCD Segment drive output	
5	COM2	LCD Common terminal	
6	COM1		
7	VDD	Power source terminal	5V±10%
8	FM	FM Local OSC input	
9	AM	AM Local OSC input	
10	GND	GND	
11	E01	Error out output	
12	E02		
13	CE	Chip enable (NP ON/OFF)	
15	X IN	Crystal oscillator terminal	
16	X OUT		
17	SD	Signal detector input	Active-High
18	MUTE	Mute output	Active-Low
19	LOUD	Loud output	Active-High
20	ST	Stereo indication input	Active-Low
21 ~ 24	K3 ~ K0	Key Return signal input	
25 ~ 30	PB3~0 PC3,2	Key Source signal output	
32	AM/FM	Band select output	High-AM Low-FM
33	VDD	Power source terminal	
34 ~ 52	LCD23 ~ LCD5	LCD Drive segment output	